STATE OF ARIZONA
DEPARTMENT OF TRANSPORTATION
PROJECT DELIVERY AND OPERATIONS DIVISION

PROJECT PLANS

ARIZONA DEPARTMENT OF TRANSPORTATION

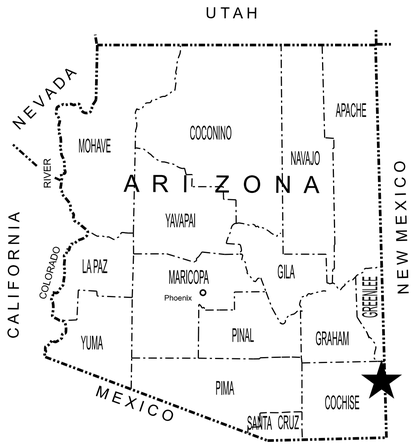

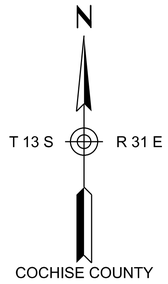

STATE HIGHWAY
BENSON-STEINS PASS HIGHWAY
INTERSTATE 10

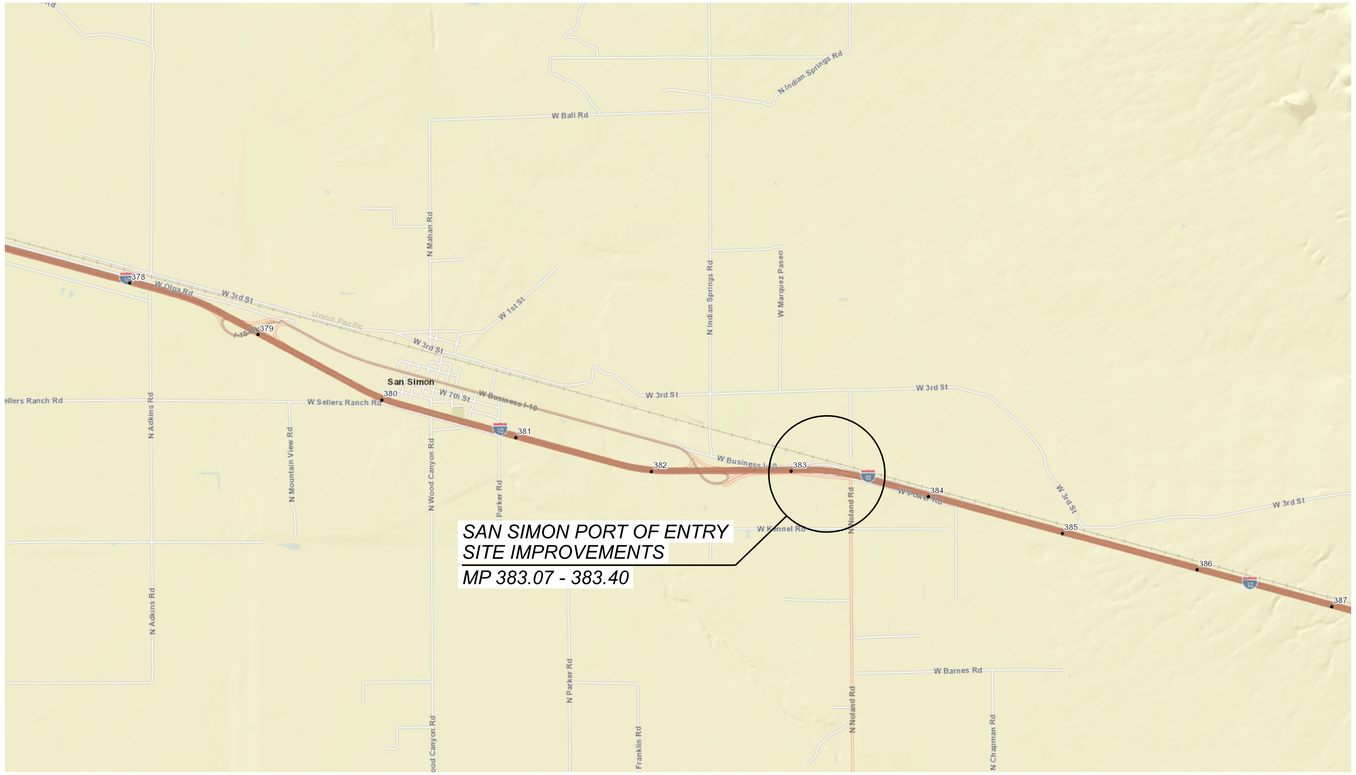

Constructed by:

Construction Company

Completion Date

Red-Lines by:

Construction Administrator Name & Company

Completion Date

Record Drawings by:

Record Drawings Designer Name & Company

Completion Date

SAN SIMON PORT OF ENTRY

PROJECT NO. 010 CH 383 F0728 01C
FEDERAL AID NO. 010-F(238)T

ARIZONA DEPARTMENT OF TRANSPORTATION
PROJECT DELIVERY AND OPERATIONS DIVISION
AUDRA MERRICK, P.E., STATE ENGINEER

REC. DWGS. DATA	REC. DWG. DATE	____ OF ____

ADOT STANDARD DRAWINGS

CONSTRUCTION STANDARDS
EFFECTIVE MARCH 2025

DATE	STANDARD	SUBJECT TITLE
5/12	C-01.10 SH 1	SYMBOL LEGEND
5/12	C-01.10 SH 2	SYMBOL LEGEND
5/12	C-01.10 SH 3	SYMBOL LEGEND
5/12	C-01.10 SH 4	SYMBOL LEGEND
12/17	C-01.30 SH 1	GENERAL ABBREVIATIONS
5/12	C-01.30 SH 2	GENERAL ABBREVIATIONS
5/12	C-01.30 SH 3	GENERAL ABBREVIATIONS
5/12	C-02.10	SLOPES, RURAL DIVIDED HIGHWAYS
5/12	C-02.20	SLOPES, RURAL UNDIVIDED AND FRINGE-URBAN HIGHWAYS
5/12	C-02.30	SLOPES, MISCELLANEOUS ROADWAYS
5/12	C-03.10 SH 1	DITCHES, CHANNELS, DIKES AND BERMS, DITCHES AND CHANNELS
5/12	C-03.10 SH 2	DITCHES, CHANNELS, DIKES AND BERMS, DIKES
5/12	C-03.10 SH 3	DITCHES, CHANNELS, DIKES AND BERMS, DITCH DIKE
5/12	C-03.10 SH 4	DITCHES, CHANNELS, DIKES AND BERMS, PIPE BERMS
5/12	C-03.10 SH 5	DITCHES, CHANNELS, DIKES AND BERMS, HEADWALL BERMS
12/17	C-04.10 SH 1	SPILLWAY, EMBANKMENT SINGLE INLET
12/17	C-04.10 SH 2	SPILLWAY, EMBANKMENT DOUBLE INLET
12/17	C-04.20 SH 1	DOWNDRAIN, EMBANKMENT SINGLE INLET
12/17	C-04.20 SH 2	DOWNDRAIN, EMBANKMENT DOUBLE INLET
12/17	C-04.30	SPILLWAY LENGTH TABLE
12/17	C-04.40	DOWNDRAIN LENGTH TABLE
5/12	C-04.50	DOWNDRAIN ENERGY DISSIPATOR
5/12	C-05.10	CURB & GUTTER, CURB, GUTTER
5/12	C-05.12 SH 1	CURB & GUTTER TRANSITIONS
5/12	C-05.12 SH 2	CURB & GUTTER TRANSITIONS
5/12	C-05.12 SH 3	CURB AND GUTTER TRANSITIONS
5/12	C-05.20 SH 1	CONCRETE DRIVEWAYS & SIDEWALKS, DRIVEWAYS
5/12	C-05.20 SH 2	CONCRETE DRIVEWAYS & SIDEWALKS, SIDEWALKS
5/12	C-05.30 SH 1	SIDEWALK RAMP, TYPE A
5/12	C-05.30 SH 2	SIDEWALK RAMP, TYPE B
5/12	C-05.30 SH 3	SIDEWALK RAMP, TYPE C
5/12	C-05.30 SH 4	SIDEWALK RAMP, TYPE D
5/12	C-05.30 SH 5	SIDEWALK RAMP, TYPE E
5/12	C-05.30 SH 6	SIDEWALK RAMP, TYPE F
5/12	C-05.30 SH 7	SIDEWALK RAMP, DETECTABLE WARNING STRIP
5/12	C-05.40	MEDIAN PAVING AND NOSE TAPER
5/12	C-05.50	CONCRETE BUS BAY
5/12	C-06.10 SH 1	DRIVEWAY & TURNOUT LAYOUTS
5/12	C-06.10 SH 2	DRIVEWAY & TURNOUT LAYOUTS
5/12	C-07.01 SH 1	PCCP JOINTS
5/12	C-07.01 SH 2	PCCP JOINTS
5/12	C-07.02	LOAD TRANSFER DOWEL ASSEMBLY
5/12	C-07.03 SH 1	PCCP JOINT LOCATIONS, MAINLINE SKEWED JOINTS
5/12	C-07.03 SH 2	PCCP JOINT LOCATIONS, MAINLINE SKEWED JOINTS
5/12	C-07.03 SH 3	PCCP JOINT LOCATIONS, MAINLINE SKEWED JOINTS
5/12	C-07.03 SH 4	PCCP JOINT LOCATIONS, MAINLINE SKEWED JOINTS
5/12	C-07.03 SH 5	PCCP JOINT LOCATIONS, MAINLINE NON-SKEWED JOINTS
5/12	C-07.03 SH 6	PCCP JOINT LOCATIONS, MAINLINE NON-SKEWED JOINTS
5/12	C-07.03 SH 7	PCCP JOINT LOCATIONS, MAINLINE NON-SKEWED JOINTS
5/12	C-07.03 SH 8	PCCP JOINT LOCATIONS, MAINLINE NON-SKEWED JOINTS
5/12	C-07.04 SH 1	PCCP JOINT LOCATIONS, PARALLEL-TYPE ENTRANCE RAMP WITH AUXILIARY LANE
5/12	C-07.04 SH 2	PCCP JOINT LOCATIONS, PARALLEL-TYPE EXIT RAMP WITH AUXILIARY LANE
5/12	C-07.04 SH 3	PCCP JOINT LOCATIONS, TAPER-TYPE ENTRANCE RAMP
5/12	C-07.04 SH 4	PCCP JOINT LOCATIONS, TAPER-TYPE EXIT RAMP
5/12	C-07.04 SH 5	PCCP JOINT LOCATIONS, CROSSROAD AND RAMP TERMINI
8/21	C-07.06	TRENCH BACKFILL AND PAVEMENT REPLACEMENT
5/12	C-08.20	PAVED GORE AREA
12/17	C-10.00	GUARDRAIL MEASUREMENT LIMITS
12/17	C-10.01	GUARDRAIL INSTALLATION
12/17	C-10.03	W-BEAM GUARDRAIL, MGS BLOCKED-OUT TIMBER POST
12/17	C-10.04	W-BEAM GUARDRAIL, MGS BLOCKED-OUT STEEL POST
12/17	C-10.05 SH 1	W-BEAM GUARDRAIL (MODIFIED) WITH FREEWAY CURB AND GUTTER
12/17	C-10.05 SH 2	W-BEAM GUARDRAIL (MODIFIED) WITH FREEWAY CURB AND GUTTER
12/17	C-10.06	W-BEAM GUARDRAIL LONG-SPAN
12/17	C-10.07 SH 1	W-BEAM GUARDRAIL, BOX CULVERT GUARDRAIL POST
12/17	C-10.07 SH 2	W-BEAM GUARDRAIL, BOX CULVERT GUARDRAIL POST
12/17	C-10.08 SH 1	W-BEAM GUARDRAIL, END ANCHOR
12/17	C-10.08 SH 2	W-BEAM GUARDRAIL, END ANCHOR
12/17	C-10.09	GUARDRAIL POST ROCK INSTALLATION
4/19	C-10.20 SH 1	GUARDRAIL END TERMINAL PAD LAYOUT FOR SOFTSTOP
4/19	C-10.20 SH 2	GUARDRAIL END TERMINAL PAD LAYOUT FOR SOFTSTOP
4/19	C-10.21 SH 1	GUARDRAIL END TERMINAL PAD LAYOUT FOR MSKT
4/19	C-10.21 SH 2	GUARDRAIL END TERMINAL PAD LAYOUT FOR MSKT
4/19	C-10.22 SH 1	GUARDRAIL END TERMINAL PAD LAYOUT FOR MAX-TENSION
4/19	C-10.22 SH 2	GUARDRAIL END TERMINAL PAD LAYOUT FOR MAX-TENSION
4/21	C-10.23 SH 1	GUARDRAIL END TERMINAL PAD LAYOUT FOR SGET
4/21	C-10.23 SH 2	GUARDRAIL END TERMINAL PAD LAYOUT FOR SGET
3/25	C-10.24 SH 1	GUARDRAIL END TERMINAL PAD LAYOUT FOR NGT
3/25	C-10.24 SH 2	GUARDRAIL END TERMINAL PAD LAYOUT FOR NGT
11/19	C-10.26 SH 1	GUARDRAIL END TERMINAL PAD LAYOUT FOR MFLEAT
11/19	C-10.26 SH 2	GUARDRAIL END TERMINAL PAD LAYOUT FOR MFLEAT
12/17	C-10.30 SH 1	GUARDRAIL TRANSITION TO CONCRETE BARRIER, TIMBER POST
12/17	C-10.30 SH 2	GUARDRAIL TRANSITION TO CONCRETE BARRIER, TIMBER POST
12/17	C-10.31 SH 1	GUARDRAIL TRANSITION TO CONCRETE BARRIER, STEEL POST
12/17	C-10.31 SH 2	GUARDRAIL TRANSITION TO CONCRETE BARRIER, STEEL POST
12/17	C-10.38 SH 1	GUARDRAIL TAPER G4 TO MGS W-BEAM WITH STAGGERED POST
12/17	C-10.38 SH 2	GUARDRAIL TAPER G4 TO MGS W-BEAM WITH OFFSET RAIL
12/17	C-10.40	CONCRETE MEDIAN BARRIER, 32" TYPE 'F', CAST-IN-PLACE
12/17	C-10.41	CONCRETE MEDIAN BARRIER, 42" TYPE 'F', CAST-IN-PLACE
12/17	C-10.44 SH 1	CONCRETE MEDIAN BARRIER, 42" TYPE 'F'WITH VARIABLE HEIGHT SIDES, H=0"TO 26"
12/17	C-10.44 SH 2	CONCRETE MEDIAN BARRIER, 42" TYPE 'F'WITH VARIABLE HEIGHT SIDES, H=0"TO 26"
12/17	C-10.45 SH 1	CONCRETE MEDIAN BARRIER, 42" TYPE 'F'WITH VARIABLE HEIGHT SIDES, H=26"TO 60"
12/17	C-10.45 SH 2	CONCRETE MEDIAN BARRIER, 42" TYPE 'F'WITH VARIABLE HEIGHT SIDES, H=26"TO 60"
12/17	C-10.50 SH 1	CONCRETE HALF BARRIER, 32" TYPE 'F', CAST-IN-PLACE
12/17	C-10.50 SH 2	CONCRETE HALF BARRIER, 32" TYPE 'F', PRECAST
12/17	C-10.51	CONCRETE HALF BARRIER, 32" TYPE 'F' WITH SIDEWALK
12/17	C-10.52	CONCRETE HALF BARRIER, 32" TYPE 'F' WITH GUTTER
12/17	C-10.53	CONCRETE HALF BARRIER, 42" TYPE 'F' WITH GUTTER
12/17	C-10.54 SH 1	CONCRETE HALF BARRIER, 32" TYPE 'F' AT PIERS, CAST-IN-PLACE
12/17	C-10.54 SH 2	CONCRETE HALF BARRIER, 32" TYPE 'F' AT PIERS, PRECAST
12/17	C-10.54 SH 3	CONCRETE HALF BARRIER, 32" TYPE 'F' AT PIERS, LAYOUT
12/17	C-10.55 SH 1	CONCRETE HALF BARRIER, 42" TYPE 'F' AT PIERS, CAST-IN-PLACE
12/17	C-10.55 SH 2	CONCRETE HALF BARRIER, 42" TYPE 'F' AT PIERS, PRECAST
12/17	C-10.55 SH 3	CONCRETE HALF BARRIER, 42" TYPE 'F' AT PIERS, LAYOUT
12/17	C-10.70 SH 1	CONCRETE HALF-BARRIER TRANSITION TO VERTICAL, 32" TYPE 'F' WITH CAISSONS
12/17	C-10.70 SH 2	CONCRETE HALF-BARRIER TRANSITION TO VERTICAL, 32" TYPE 'F' WITH CAISSONS
12/17	C-10.70 SH 3	CONCRETE HALF-BARRIER TRANSITION TO VERTICAL, 32" TYPE 'F' WITH CAISSONS
12/17	C-10.71 SH 1	CONCRETE HALF-BARRIER TRANSITION TO VERTICAL, 32" TYPE 'F' WITH CURB & GUTTER
12/17	C-10.71 SH 2	CONCRETE HALF-BARRIER TRANSITION TO VERTICAL, 32" TYPE 'F' WITH CURB & GUTTER
12/17	C-10.72 SH 1	CONCRETE HALF-BARRIER TRANSITION TO VERTICAL, 42" TO 32" TYPE 'F' WITH CAISSONS
12/17	C-10.72 SH 2	CONCRETE HALF-BARRIER TRANSITION TO VERTICAL, 42" TO 32" TYPE 'F' WITH CAISSONS
12/17	C-10.72 SH 3	CONCRETE HALF-BARRIER TRANSITION TO VERTICAL, 42" TO 32" TYPE 'F' WITH CAISSONS
12/17	C-10.73 SH 1	CONCRETE HALF-BARRIER TRANSITION TO VERTICAL, 42" TO 32" TYPE 'F' WITH GUTTER
12/17	C-10.73 SH 2	CONCRETE HALF-BARRIER TRANSITION TO VERTICAL, 42" TO 32" TYPE 'F' WITH GUTTER
12/17	C-10.74	CONCRETE HALF-BARRIER TRANSITION, 42" TO 32" TYPE 'F'
12/17	C-10.75 SH 1	CONCRETE HALF-BARRIER TRANSITION, TYPE 'F' TANGENT DEPARTURE TYPE 1
12/17	C-10.75 SH 2	CONCRETE HALF-BARRIER TRANSITION, TYPE 'F' TANGENT DEPARTURE TYPE 2
12/17	C-10.76	CONCRETE HALF-BARRIER TRANSITION, TYPE 'F' AT RADIUS, 32" TO 0"
4/19	C-10.77	CONCRETE BARRIER TRANSITION TO GUARDRAIL END TERMINAL LAYOUT WITH CURB
12/17	C-10.78	CONCRETE HALF-BARRIER TRANSITION, 32" TYPE 'F' LOW SPEED APPROACH
12/17	C-10.79	CONCRETE HALF-BARRIER TRANSITION, 42" TYPE 'F' TANGENT DEPARTURE
5/12	C-11.10 SH 1	ROADWAY CATTLE GUARD
5/12	C-11.10 SH 2	ROADWAY CATTLE GUARD
5/12	C-11.10 SH 3	ROADWAY CATTLE GUARD
5/12	C-11.10 SH 4	ROADWAY CATTLE GUARD
5/12	C-11.20	CATTLE GUARD, DRAINAGE
5/12	C-12.10 SH 1	FENCE, WOVEN WIRE
5/12	C-12.10 SH 2	FENCE, BARBED WIRE
5/12	C-12.10 SH 3	FENCE, TYPE 1 AND 2 GATES, FLOOD GATE
5/12	C-12.10 SH 4	FENCE, FLOOD GATE INSTALLATION
5/12	C-12.10 SH 5	FENCE, MISCELLANEOUS DETAILS
5/12	C-12.20 SH 1	FENCE, CHAIN LINK, TYPE 1
5/12	C-12.20 SH 2	FENCE, CHAIN LINK, TYPE 2
5/12	C-12.20 SH 3	FENCE, CHAIN LINK, GATES
5/12	C-12.30 SH 1	FENCE, CHAIN LINK CABLE BARRIER
5/12	C-12.30 SH 2	FENCE, CHAIN LINK CABLE BARRIER
5/12	C-12.30 SH 3	FENCE, CHAIN LINK CABLE BARRIER
5/12	C-13.10 SH 1	PIPE CULVERT INSTALLATION
5/12	C-13.10 SH 2	PIPE CULVERT INSTALLATION
8/23	C-13.15	TYPICAL PIPE INSTALLATION
5/12	C-13.20	PIPE, REINFORCED CONCRETE END SECTION
5/12	C-13.25	PIPE, CORRUGATED METAL END SECTION
5/12	C-13.30	PIPE AND PIPE ARCH, CORRUGATED METAL, CONCRETE INVERT PAVING
5/12	C-13.55	PIPE, CATTLE-VEHICLE PASS, MITERED END TREATMENT
5/12	C-13.60	SLOTTED DRAIN DETAILS
5/12	C-13.65	SLOTTED DRAIN INSTALLATION DETAILS
5/12	C-13.70	STORM DRAIN CONNECTION DETAILS
5/12	C-13.75	STORM DRAIN OUTLET BARRIER GATE
5/12	C-13.76	STORM DRAIN OUTLET AND STORM DRAIN PLUG
5/12	C-13.80	PIPE COLLAR DETAILS
5/12	C-15.10	CATCH BASIN, TYPE 1
5/12	C-15.20 SH 1	CATCH BASIN, TYPE 3
5/12	C-15.20 SH 2	CATCH BASIN, TYPE 3
5/12	C-15.20 SH 3	CATCH BASIN, ACCESS FRAME AND COVER DETAILS
5/12	C-15.30	CATCH BASIN, TYPE 4
5/12	C-15.40 SH 1	CATCH BASIN, TYPE 5
5/12	C-15.40 SH 2	CATCH BASIN, TYPE 5
5/12	C-15.50	CATCH BASIN, FRAME AND GRATE
5/12	C-15.70 SH 1	CATCH BASIN, MISCELLANEOUS DETAILS
5/12	C-15.70 SH 2	CATCH BASIN, MISCELLANEOUS DETAILS
5/12	C-15.75	CATCH BASIN, DROP INLET
5/12	C-15.80	CATCH BASIN, FLUSH
5/12	C-15.81	CATCH BASIN, SIDE SLOPE
5/12	C-15.90	CATCH BASIN, MEDIAN DIKE, PRECAST
5/12	C-15.91 SH 1	FREEWAY CATCH BASIN DETAILS
5/12	C-15.91 SH 2	FREEWAY CATCH BASIN DETAILS
5/12	C-15.92 SH 1	CATCH BASIN WITH TYPE 'F' CONCRETE HALF BARRIER
5/12	C-15.92 SH 2	CATCH BASIN WITH TYPE 'F' CONCRETE HALF BARRIER
5/12	C-16.40	IRRIGATION SLEEVES
5/12	C-17.10	RAIL BANK PROTECTION FOR DRAINAGEWAYS, TYPES 1, 2 & 3
5/12	C-17.15	RAIL BANK PROTECTION AT ABUTMENTS, TYPES 4, 5 & 6
5/12	C-17.20	RAIL BANK PROTECTION FOR DRAINAGEWAYS, TYPES 7, 8 & 9
5/12	C-18.10 SH 1	MANHOLE, RISER DETAILS
5/12	C-18.10 SH 2	MANHOLE, BASE DETAILS, NORMAL INSTALLATION
5/12	C-18.10 SH 3	MANHOLE, FRAME AND COVER DETAILS
5/12	C-19.10 SH 1	FORD, CONCRETE WALLS
5/12	C-19.10 SH 2	FORD, TYPES 1 AND 2
5/12	C-21.10	SURVEY MONUMENT FRAME AND COVER
5/12	C-21.20	SURVEY MARKER

ADOT STANDARD DRAWINGS
REVISION DATES and STANDARD NO.'s REVIEW

	NAME	DATE
CONSTRUCTION STANDARDS	ALLEN HATHCOCK, PE	08/2026

PROJECT NO. 010 CH 383 F0728 01C — 1A OF 200

RECORD DRAWING DATA — FEDERAL ID NO. 010-F(238)T — REC. DWG. DATE — OF

ADOT STANDARD DRAWINGS

TRAFFIC SIGNING & MARKING STANDARDS
(SHEET 1 OF 2)
EFFECTIVE MAY 2025

REVISION DATE	STANDARD NUMBER	SUBJECT : SIGNING AND MARKING DETAILS
6/14	M-1	CURB MARKINGS FOR RAISED MEDIAN AND ISLANDS
1/20	M-2 SHT 1	INTERSECTION STRIPING
5/15	M-2 SHT 2	INTERSECTION STRIPING (TWO-LANE RURAL)
6/14	M-2 SHT 3	CENTERLINE AND REVERSE CURVE DETAILS
6/14	M-3	STRIPING AND DELINEATION FOR FREEWAY TERMINALS
6/14	M-4	PASSING LANE STRIPING DETAILS
6/14	M-5	RAILROAD PAVEMENT MARKINGS
6/14	M-6	WORD MARKINGS
6/14	M-7	PAVEMENT LETTERS
6/14	M-8	PAVEMENT LETTERS
6/14	M-9	PAVEMENT NUMBERS
6/14	M-10 SHT 1	PAVEMENT MARKING SYMBOLS
6/14	M-10 SHT 2	PAVEMENT MARKING SYMBOLS
5/25	M-10 SHT 3	PAVEMENT MARKING SYMBOLS
6/14	M-11	TURN LANE PAVEMENT MARKINGS
6/14	M-12	WRONG-WAY ARROWS
1/19	M-13	PREFERENTIAL LANE PAVEMENT MARKINGS
6/14	M-14	STRIPING AND DELINEATION FOR TRUCK ESCAPE RAMPS
8/20	M-15 SHT 1	PAVEMENT MARKING FOR FREEWAY ENTRANCE RAMP - TAPERED ACCELERATION LANE
8/20	M-15 SHT 2	PAVEMENT MARKING FOR FREEWAY ENTRANCE RAMP - PARALLEL ACCELERATION LANE
8/20	M-15 SHT 3	PAVEMENT MARKING FOR FREEWAY ENTRANCE RAMP - PARALLEL ACCELERATION LANE WITH HOV BYPASS
6/14	M-15 SHT 4	PAVEMENT MARKING FOR FREEWAY PARALLEL - ACCELERATION LANE
8/20	M-16 SHT 1	PAVEMENT MARKING FOR FREEWAY EXIT RAMPS - TAPERED DECELERATION LANE
8/20	M-16 SHT 2	PAVEMENT MARKING FOR FREEWAY EXIT RAMP - PARALLEL DECELERATION LANE
8/20	M-17	FREEWAY LANE DROP PAVEMENT MARKINGS
11/24	M-19 SHT 1	RAISED PAVEMENT MARKER PLAN LEGEND
6/14	M-19 SHT 2	NON-REFLECTIVE RAISED PAVEMENT MARKER DETAILS
11/24	M-19 SHT 3	RETROREFLECTIVE RAISED PAVEMENT MARKER DETAILS
11/24	M-19 SHT 4	RETROREFLECTIVE RAISED PAVEMENT MARKER DETAILS
5/15	M-19 SHT 5	PAVEMENT MARKING DETAILS FOR UNDIVIDED HIGHWAYS
6/14	M-19 SHT 6	RETROREFLECTIVE RAISED PAVEMENT MARKERS (RPM) FOR UNDIVIDED HIGHWAYS
8/20	M-19 SHT 7	FREEWAY AND DIVIDED HIGHWAY EDGE LINE AND LANE STRIPING
5/15	M-19 SHT 8	LANE DROP MARKING AND RAMP OR INTERSECTION GUIDE STRIPING
8/20	M-19 SHT 9	PAVEMENT MARKING CROSS-SECTION DETAILS FOR HIGHWAYS AND FREEWAYS
6/24	M-19 SHT 10	CONTRAST LANE LINE FOR FREEWAY AND DIVIDED HIGHWAY
10/23	M-19 SHT 11	LEAD-LAG CONTRAST PAVEMENT MARKINGS FOR CONCRETE PAVEMENT
6/14	M-20 SHT 1	CHIP SEAL MARKER USAGE FOR TEMPORARY MARKERS
6/14	M-20 SHT 2	CHIP SEAL MARKER USAGE FOR TEMPORARY MARKERS
6/14	M-21	TRANSVERSE RUMBLE STRIP DETAILS
9/21	M-22 SHT 1	LONGITUDINAL RUMBLE STRIP GROOVE, PATTERN - AND LOCATION DETAILS
9/21	M-22 SHT 2	LONGITUDINAL RUMBLE STRIP EXCEPTION DETAILS
9/21	M-22 SHT 3	ENTRANCE AND EXIT RAMPS RUMBLE STRIP INSTALLATION DETAILS
3/22	M-22 SHT 4	CENTERLINE RUMBLE STRIP GROOVE, PATTERN - AND LOCATION DETAILS
6/14	M-23	OBJECT MARKER DETAILS
6/14	M-24	OBJECT MARKER PLACEMENT DETAILS
2/21	M-26 SHT 1	DELINEATOR PLACEMENT AND SPACING
2/21	M-26 SHT 2	DELINEATOR PLACEMENT AND SPACING
2/21	M-26 SHT 3	FLEXIBLE DELINEATOR ASSEMBLIES
2/21	M-26 SHT 4	SQUARE STEEL POST DELINEATOR
2/21	M-26 SHT 5	DELINEATOR FOUNDATION DETAILS
2/21	M-27 SHT 1	DELINEATION DETAILS FOR MEDIAN CROSSOVERS
2/21	M-27 SHT 2	DELINEATION DETAILS FOR MEDIAN CROSSOVERS
6/14	M-29	OFF- MAINLINE REFERENCE MARKER LOCATION DETAIL
6/14	M-30	OFF- MAINLINE REFERENCE MARKER DETAILS
6/14	M-32	BRIDGE AND BARRIER MARKER DETAILS
6/14	M-33	BRIDGE AND BARRIER MARKER PLACEMENT AND INSTALLATION DETAILS
6/14	M-34	GUARDRAIL END TERMINAL DELINEATION DETAILS
6/14	M-35	OBJECT MARKER FOR SAND BARREL CRASH CUSHION

ADOT STANDARD DRAWINGS
REVISION DATES and STANDARD NO.'s REVIEW

	NAME	DATE
SIGNING & MARKING STANDARDS	RACHEL GRANO, PE	08/2026

PROJECT NO.				
010 CH 383 F0728 01C			1B-1 OF	200
RECORD DRAWING DATA	FEDERAL ID NO. 010-F(238)T	REC. DWG. DATE	OF	

ADOT STANDARD DRAWINGS

TRAFFIC SIGNING & MARKING STANDARDS
(SHEET 2 OF 2)
EFFECTIVE MAY 2025

REVISION DATE	STANDARD NUMBER	SUBJECT : SIGNING AND MARKING DETAILS
4/19	S-1 SHT 1	GENERAL SIGNING NOTES
6/14	S-2 SHT 1	S & W BREAKAWAY POST SELECTION CHART
6/14	S-2 SHT 2	S & W BREAKAWAY POST INSTALLATION DETAILS
6/14	S-3 SHT 1	FLAT SHEET SIGNS SQUARE TUBE POST GENERAL NOTES
6/14	S-3 SHT 2	SINGLE POST FLAT SHEET RECTANGULAR SIGN ASSEMBLY - 12, 18 AND 24 INCH WIDTHS
6/14	S-3 SHT 3	SINGLE POST FLAT SHEET RECTANGULAR SIGN ASSEMBLY - 30, 36, 42 AND 54 INCH WIDTHS
6/14	S-3 SHT 4	TWO POST FLAT SHEET RECTANGULAR SIGN ASSEMBLY - 36, 42 AND 48 INCH WIDTHS
6/14	S-3 SHT 5	TWO POST FLAT SHEET RECTANGULAR SIGN ASSEMBLY - 54, 60 AND 72 INCH WIDTHS
6/14	S-3 SHT 6	TWO POST FLAT SHEET RECTANGULAR SIGN ASSEMBLY - 84 - 144 INCH WIDTHS
6/14	S-3 SHT 7	THREE POST FLAT SHEET RECTANGULAR SIGN ASSEMBLY - 48, 60 AND 72 INCH WIDTHS
6/14	S-3 SHT 8	THREE POST FLAT SHEET RECTANGULAR SIGN ASSEMBLY - 84 - 144 INCH WIDTHS
6/14	S-3 SHT 9	WARNING SIGN ASSEMBLY - SINGLE POST
6/14	S-3 SHT 10	WARNING SIGN ASSEMBLY - TWO POST
6/14	S-3 SHT 11	WARNING SIGN ASSEMBLY - THREE POST
6/14	S-3 SHT 12	MULTIPLE ROUTE MARKER ASSEMBLIES
6/14	S-3 SHT 13	SPECIAL SIGN ASSEMBLIES
6/14	S-3 SHT 14	STRINGER DETAILS FOR SQUARE TUBE POSTS
6/14	S-3 SHT 15	SQUARE TUBE SIGN POST FOUNDATION
6/14	S-3 SHT 16	SQUARE TUBE POST SLIP BASE DETAILS
6/14	S-4	W SHAPE BREAKAWAY POST FUSE PLATE AND HINGE DETAILS
6/22	S-5	W SHAPE BREAKAWAY POST DETAILS
6/22	S-6	S4x7.7 BREAKAWAY POST DETAILS
6/14	S-7 SHT 1	ALUMINUM EXTRUSION SIGN PANEL DETAILS
6/14	S-7 SHT 2	ALUMINUM EXTRUSION AUXILIARY SIGN INSTALLATION DETAILS
5/15	S-7 SHT 3	ALUMINUM EXTRUSION EXIT PANEL INSTALLATION DETAIL
6/14	S-8 SHT 1	FLAT SHEET ALUMINUM PANEL ON BREAKAWAY POSTS INSTALLATION DETAIL
6/14	S-8 SHT 2	ALUMINUM EXTRUSION SIGN TO PERFORATED POSTS INSTALLATION DETAIL
8/22	S-9 SHT 1	SIGN INSTALLATION ON POLE
8/22	S-9 SHT 2	SIGNS (BACK TO BACK) INSTALLATION ON POLE
8/22	S-9 SHT 3	SIGN INSTALLATION ON SIGNAL POLE
8/22	S-9 SHT 4	SIGN INSTALLATION ON POLE BAND-TYPE CLAMP
6/14	S-10	MILEPOST AND REFERENCE LOCATION SIGNS
11/22	S-11 SHT 1	TAPERED TUBE SIGN STRUCTURE SINGLE BEAM
4/19	S-11 SHT 2	TAPERED TUBE SIGN STRUCTURE SINGLE BEAM POST AND BEAM DETAILS
6/14	S-12 SHT 1	TYPE A, B, AND DOWN ARROWS
6/14	S-12 SHT 2	TYPE C AND D ARROWS
6/14	S-12 SHT 3	C2 ARROW DETAIL
6/14	S-13	SIGN IDENTIFICATION DETAILS
6/14	S-14 SHT 1	ROTATING OPEN/CLOSED SIGN
6/14	S-14 SHT 2	ROTATING OPEN/CLOSED SIGN DETAILS
6/14	S-14 SHT 3	ROTATING OPEN/CLOSED SIGN MOUNTING DETAILS
6/14	S-15 SHT 1	FOLDING RECTANGULAR SIGN ASSEMBLY
6/14	S-15 SHT 2	FOLDING RECTANGULAR SIGN OPERATION
6/14	S-15 SHT 3	FOLDING DIAMOND SIGN ASSEMBLY
4/19	S-16 SHT 1	TEMPORARY WOOD POSTS
4/19	S-16 SHT 2	TEMPORARY WOOD POSTS SELECTION CHART
6/14	S-17	END OF ROAD BARRICADE
7/19	S-18 SHT 1	ALUMINUM GRAFFITI SHIELD EXIT AND GUIDE SIGN ASSEMBLY
7/19	S-18 SHT 2	ALUMINUM GRAFFITI SHIELD RIGHT RIDER SIDE PANEL
7/19	S-18 SHT 3	ALUMINUM GRAFFITI SHIELD LEFT RIDER SIDE PANEL
7/19	S-18 SHT 4	ALUMINUM GRAFFITI SHIELD CORNER
7/19	S-18 SHT 5	ALUMINUM GRAFFITI SHIELD SPLICE PLATE
7/19	S-18 SHT 6	ALUMINUM GRAFFITI SHIELD FIN
7/19	S-18 SHT 7	ALUMINUM GRAFFITI SHIELD TOP PANEL
7/19	S-18 SHT 8	ALUMINUM GRAFFITI SHIELD SIDE PANEL
7/19	S-18 SHT 9	ALUMINUM GRAFFITI SHIELD RIGHT TRANSITION FROM RIDER
7/19	S-18 SHT 10	ALUMINUM GRAFFITI SHIELD LEFT TRANSITION FROM RIDER
7/19	S-18 SHT 11	ALUMINUM GRAFFITI SHIELD SPLICE PLATE FOR FIN
12/18	C-1	SAND BARREL CRASH CUSHION
12/18	C-2	SAND BARREL CRASH CUSHION TYPICAL INSTALLATION
6/14	C-3 SHT 1	PRECAST CONCRETE BARRIER STRUCTURAL DETAILS
6/14	C-3 SHT 2	PRECAST CONCRETE BARRIER PIN AND LOOP ASSEMBLY
6/14	C-4 SHT 1	MEDIAN CROSSOVER
6/14	C-4 SHT 2	TYPICAL END TREATMENTS FOR DETOURS USING TEMPORARY CONCRETE BARRIER (TCB)
6/14	C-5 SHT 1	APPROACH PLATE AND TRANSITION SECTION FOR TEMPORARY CONCRETE BARRIER
6/14	C-5 SHT 2	APPROACH PLATE AND TRANSITION SECTION FOR TEMPORARY CONCRETE BARRIER

ADOT STANDARD DRAWINGS
REVISION DATES and STANDARD NO.'s REVIEW

	NAME	DATE
SIGNING & MARKING STANDARDS	RACHEL GRANO, PE	08/2026

PROJECT NO.				
010 CH 383 F0728 01C			1B-2 OF 200	
RECORD DRAWING DATA	FEDERAL ID NO. 010-F(238)T	REC. DWG. DATE	OF	

ADOT STANDARD DRAWINGS

TRAFFIC SIGNAL AND LIGHTING STANDARDS
(SHEET 1 OF 2)
EFFECTIVE NOVEMBER 2024

REVISION DATE	STANDARD NUMBER	SUBJECT : TRAFFIC SIGNALS AND LIGHTING DETAILS
	T.S. 0	**ABBREVIATIONS, SYMBOLS AND DEFINITIONS**
05/15	0-1	STANDARD ABBREVIATIONS
01/12	0-2 SHT 1	PLAN SYMBOLS
01/12	0-2 SHT 2	PLAN SYMBOLS
01/12	0-2 SHT 3	PLAN SYMBOLS
03/10	0-3 SHT 1	STANDARD DEFINITIONS
03/10	0-3 SHT 2	STANDARD DEFINITIONS
11/22	0-4	REFERENCE DOCUMENTS AND GENERAL REQUIREMENTS
	T.S. 1	**PULL BOXES**
09/11	1-1 SHT 1	LIGHT DUTY - LIGHT WEIGHT NO. 5 AND NO. 7 PULL BOX
09/11	1-1 SHT 2	LIGHT DUTY - LIGHT WEIGHT NO. 5 AND NO. 7 SLOPE WALL BODY PULL BOX DETAILS
03/15	1-2	HEAVY DUTY NO. 5 AND NO. 7 STRAIGHT BODY WALL PULL BOX DETAILS
09/11	1-3	REPLACEMENT LID SIZING FOR EXISTING NO. 5 AND NO. 7 PULL BOXES
09/11	1-4 SHT 1	TYPICAL PULL BOX INSTALLATION AND WIRING DETAILS
09/11	1-4 SHT 2	TYPICAL PULL BOX INSTALLATION AND WIRING DETAILS
09/11	1-4 SHT 3	TYPICAL PULL BOX INSTALLATION DETAILS
09/11	1-5 SHT 1	ELECTRICAL CONDUIT COVER AND TRENCH REQUIREMENTS
09/11	1-5 SHT 2	CONDUIT EXPANSION COUPLINGS
09/11	1-6	CONDUCTOR REQUIREMENTS
03/10	1-7	TRAFFIC SIGNAL IMSA CABLE COLOR CODES
09/11	1-8 SHT 1	FRONT OF BARRIER JUNCTION BOX
09/11	1-8 SHT 2	BACK OF BARRIER JUNCTION BOX
09/11	1-9	TOP OF BARRIER JUNCTION BOX DETAILS
09/11	1-10	TOP OF BARRIER JUNCTION BOX DETAILS
10/13	1-11 SHT 1	HEAVY DUTY LIGHTING NO. 4 AND NO. 6 PULL BOX
10/13	1-11 SHT 2	HEAVY DUTY LIGHTING NO. 4 AND NO. 6 PULL BOX
03/15	1-11 SHT 3	HEAVY DUTY LIGHTING NO. 4 AND NO. 6 PULL BOX LID
03/15	1-12 SHT 1	PRECAST HEAVY DUTY LIGHTING NO. 4B AND NO. 6B PULL BOX
03/15	1-12 SHT 2	PRECAST HEAVY DUTY LIGHTING NO. 4B AND NO. 6B PULL BOX
	T.S. 2	**FOUNDATIONS**
03/10	2-1	FOUNDATION FOR TYPE II LOAD CENTER CABINET
03/10	2-2	FOUNDATION FOR TYPE IV LOAD CENTER CABINET
03/10	2-3	FOUNDATION FOR TYPE III CONTROL CABINET
03/10	2-4	FOUNDATION FOR TYPE IV AND V CONTROL CABINETS
03/10	2-5	FOUNDATION FOR TYPE 340 CONTROL CABINET
03/10	2-6	METER PEDESTAL CABINET FOUNDATION AND BASE
03/15	2-7	TRAFFIC SIGNAL UPS CABINET FOUNDATION DETAIL
	T.S. 3	**CABINETS**
12/12	3-0	NOTES FOR TYPE II AND IV LOAD CENTER CABINETS
03/10	3-1	TYPE II LOAD CENTER CABINET
03/10	3-2	TYPE IV LOAD CENTER CABINET
03/10	3-3	TYPE II OR IV LOAD CENTER CABINET WIRING DETAILS 240/480 3W W/DISCONNECT
03/10	3-4 SHT 1	PHOTO ELECTRIC CELL MOUNTING DETAILS
03/10	3-4 SHT 2	PHOTO ELECTRIC CELL MOUNTING DETAILS
03/10	3-5 SHT 1	TYPE I AND II METER PEDESTAL CABINET
12/12	3-5 SHT 2	METER PEDESTAL CABINET
03/10	3-6	TYPE III CONTROL CABINET
03/10	3-7	POLE MOUNTED TYPE III CONTROL CABINET
03/10	3-8 SHT 1	POLE MOUNT DETAILS FOR TYPE III CONTROL CABINET
03/10	3-8 SHT 2	POLE MOUNT DETAILS FOR TYPE III CONTROL CABINET
03/10	3-9 SHT 1	TYPE IV AND V CONTROL CABINET NOTES
03/10	3-9 SHT 2	TYPE IV CONTROL CABINET
03/10	3-9 SHT 3	TYPE V CONTROL CABINET
03/10	3-10	CABINET EXTENSION OR ELEVATOR BASE
03/10	3-11	CONTROL CABINET MOUNTED SERVICE ENCLOSURE
03/10	3-12 SHT 1	120/240 OR 240/480 VOLT, SINGLE PHASE UTILITY PULL SECTION AND SERVICE DISCONNECT DETAILS
03/10	3-12 SHT 2	120/240 OR 240/480 VOLT, SINGLE PHASE UTILITY PULL SECTION AND SERVICE DISCONNECT DETAILS
03/10	3-13 SHT 1	TRAFFIC SIGNALS AND LIGHTING MODEL 345 CABINET DETAILS
03/10	3-13 SHT 2	TRAFFIC SIGNALS AND LIGHTING MODEL 345 CABINET DETAILS
03/10	3-13 SHT 3	TRAFFIC SIGNALS AND LIGHTING MODEL 345 CABINET CAGE DETAILS

REVISION DATE	STANDARD NUMBER	SUBJECT : TRAFFIC SIGNALS AND LIGHTING DETAILS
	T-SL. 4	**POLES AND POSTS**
11/22	4.01	TYPE A POLE
11/22	4.02	TYPE S POLE
11/22	4.03	TYPE T POLE
11/22	4.04	TYPE S AND TYPE T STEEL TWIN LUMINAIRE MOUNTING BRACKET AND EXTENSIONS
11/22	4.05	ALUMINUM TYPE S POLE
11/22	4.06	ALUMINUM TYPE T POLE
11/22	4.07	TYPE G POLE
11/22	4.08	ALUMINUM TYPE G POLE
11/22	4.09	ALUMINUM TYPE H POLE
11/22	4.10	ALUMINUM TYPE I POLE
11/22	4.11	GENERAL NOTES FOR TRAFFIC SIGNALS AND LIGHTING POLES WITH MAXIMUM LOADING CASE
04/19	4.12	TYPE J POLES (25-J, 30-J, 35-J, AND 40-J) WITH 25 FT TO 40 FT MAST ARM SPAN LENGTH
04/19	4.13	TYPE Q POLES (25-QL, 30-QL, 35-QL, AND 40-QL) WITH 25 FT TO 40 FT MAST ARM SPAN LENGTH WITH LUMINAIRES
04/19	4.14	TYPE K POLES (45-K, 50-K, AND 55-K) WITH 45 FT TO 55 FT MAST ARM SPAN LENGTH
04/19	4.15	TYPE R POLES (45-RL, 50-RL, AND 55-RL) WITH 45 FT TO 55 FT MAST ARM SPAN LENGTH WITH LUMINAIRES
11/22	4.16	TYPE V POLES (60-V AND 65-V) WITH 60 FT TO 65 FT MAST ARM SPAN LENGTH
11/22	4.17	TYPE W POLES (60-WL AND 65-WL) WITH 60 FT TO 65 FT MAST ARM SPAN LENGTH WITH LUMINAIRES
11/22	4.18	POLE HAND HOLE DETAILS
11/22	4.19	TYPE U POLE (ELLIPTICAL BASE) DETAILS
11/22	4.20	TYPE U POLE (ROUND POLE WITH SQUARE BASE) NOTES
04/19	4.21	TYPE U POLE (ROUND POLE WITH SQUARE BASE) FOUNDATION DETAILS
04/19	4.22	TYPE U POLE (ROUND POLE WITH SQUARE BASE) DEATILS 1
04/19	4.23	TYPE U POLE (ROUND POLE WITH SQUARE BASE) DEATILS 2
04/19	4.24	TYPE U POLE (ROUND POLE WITH SQUARE BASE) PIPE TENON DETAILS
04/19	4.25	TYPE U POLE (ROUND POLE WITH SQUARE BASE) TWIN LUMINAIRE BRACKET DETAILS
04/19	4.26	EQUIPMENT MOUNTING HEIGHT DETAILS
04/19	4.27	PEDESTRIAN PUSH BUTTON POST "TYPE PB POLE"
11/22	4.28	POLE FOUNDATION ANCHOR BOLTS
04/19	4.29	STEEL MAST ARM DETAILS LUMINAIRE AND SIGNAL ARMS TO 20'
04/19	4.30	ALUMINUM TRUSS MAST ARM DETAILS FOR TYPE G, H, AND I POLES
04/19	4.31	SIGNAL MAST ARM TENON DETAIL
04/19	4.32	TYPICAL HIGHWAY LIGHTING OFFSETS IN CUT AND FILL SECTIONS
11/22	4.33	STEEL ADAPTER PLATE FOR 30 FT ALUMINUM TYPE "G" OR TYPE "S" LIGHT POLES
	T.S. 5	**POLE BASES - SPECIAL**
11/24	5-0	TYPE 2 AND 3 CAST ALUMINUM BREAK-AWAY BASES
04/19	5-1	TYPE 2 CAST ALUMINUM BREAK-AWAY BASE
04/19	5-2	TYPE 3 CAST ALUMINUM BREAK-AWAY BASE
05/21	5-3	INSTALLATION DETAILS FOR POLE FOUNDATIONS WITH TYPE 2 AND 3 BREAK-AWAY BASES
	T.S. 6	**HIGHWAY TRAFFIC DATA DETECTORS**
03/10	6-1	TYPE C VEHICLE DETECTOR LOOPS FOR TRAFFIC COUNTERS
03/10	6-2 SHT 1	TYPE SA AND SB SPEED/VEHICLE CLASSIFICATION SYSTEMS
03/10	6-2 SHT 2	TYPE SA SPEED/VEHICLE CLASSIFICATION SYSTEMS
03/10	6-2 SHT 3	TYPE SB SPEED/VEHICLE CLASSIFICATION SYSTEMS
12/12	6-3	PIEZOELECTRIC WEIGHT SENSOR AND LOOP LANE LAYOUT
12/12	6-4 SHT 1	DETECTOR LOOPS AND PIEZOELECTRIC SENSOR DETAILS
12/12	6-4 SHT 2	DETECTOR LOOPS AND PIEZOELECTRIC SENSOR DETAILS
03/15	6-4 SHT 3	DETAIL A PIEZOELECTRIC SENSOR DETAILS
12/12	6-4 SHT 4	DETAIL B DETECTOR LOOP DETAILS
12/12	6-4 SHT 5	DETECTOR LOOPS AND PIEZOELECTRIC SENSOR DETAILS
03/10	6-5	MICROLOOPS FOR SPEED/VEHICLE CLASSIFICATION
03/10	6-6	QUARTZ PIEZOELECTRIC WEIGHT SENSOR AND LOOP LANE LAYOUT
03/10	6-7	TRAFFIC DATA COLLECTION CABINET INSTALLATION DETAILS
03/10	6-8	TYPE MPD CABINET POLE, BASE AND FOUNDATION INSTALLATION DETAILS

ADOT STANDARD DRAWINGS
REVISION DATES and STANDARD NO.'s REVIEW

	NAME	DATE
TRAFFIC SIGNAL & LIGHTING STANDARDS	RACHEL GRANO, PE	08/2026

PROJECT NO. 010 CH 383 F0728 01C — 1C-1 OF 200

RECORD DRAWING DATA	FEDERAL ID NO. 010-F(238)T	REC. DWG. DATE	OF

ADOT STANDARD DRAWINGS

TRAFFIC SIGNAL AND LIGHTING STANDARDS
(SHEET 2 OF 2)
EFFECTIVE NOVEMBER 2024

REVISION DATE	STANDARD NUMBER	SUBJECT : TRAFFIC SIGNALS AND LIGHTING DETAILS
	T.S. 7	**TRAFFIC SIGNAL DETECTORS**
03/10	7-1 SHT 1	LOOP DETECTOR LOCATION SAWCUT PATTERNS AND INSTALLATION DETAILS
03/10	7-1 SHT 2	SAW CUT AND CORING DETAILS
03/15	7-1 SHT 3	SAW CUT AND CORING DETAILS
03/10	7-1 SHT 4	TYPICAL DETECTOR LOOP LEAD-IN ROAD TO PULL BOX DETAIL
03/10	7-1 SHT 5	LOOP DETECTOR LOCATION AND INSTALLATION DETAILS
03/10	7-2	PRE-FORMED LOOP DETECTORS FOR RAMP METERING AND COUNTING
03/10	7-3	PRE-FORMED LOOP DETECTORS IN BRIDGE DECK
03/10	7-4	PRE-FORMED LOOP DETECTORS IN PCCP
03/10	7-5	TYPICAL PRE-FORMED LOOP DETECTOR STUB-OUT DETAIL
	T.S. 8	**SIGNAL ASSEMBLIES**
12/23	8-0	TRAFFIC SIGNAL VEHICLE FACE ASSEMBLY REQUIREMENTS AND DETAILS
12/23	8-1	VEHICLE TRAFFIC SIGNAL FACE ASSEMBLY
12/23	8-2	VEHICLE TRAFFIC SIGNAL FACE ASSEMBLY
10/13	8-4 SHT 1	12-INCH VEHICLE TRAFFIC SIGNAL HOUSING/SECTION
01/12	8-4 SHT 2	12-INCH VEHICLE TRAFFIC SIGNAL HOUSING/SECTION NOTES
01/12	8-4 SHT 3	VEHICLE TRAFFIC SIGNAL HOUSING/SECTION DETAILS
03/10	8-4 SHT 4	VISORS FOR 8-INCH AND 12-INCH VEHICLE TRAFFIC SIGNAL FACE ASSEMBLIES
01/12	8-5	FLASHING BEACON SIGNAL FACE ASSEMBLY
01/12	8-6	LED LAMP FOR PROGRAMMED VISIBILITY SIGNAL
01/12	8-7 SHT 1	PEDESTRIAN SIGNAL ASSEMBLY REQUIREMENTS AND DETAILS
01/12	8-7 SHT 2	PEDESTRIAN SIGNAL ASSEMBLY HOUSING
01/12	8-7 SHT 3	PEDESTRIAN SIGNAL ASSEMBLY VISOR
	T.S. 9	**MOUNTING ASSEMBLIES - SIGNAL**
03/10	9-0 SHT 1	MOUNTING ASSEMBLY GENERAL REQUIREMENTS
03/10	9-0 SHT 2	MOUNTING ASSEMBLY GENERAL REQUIREMENTS
03/10	9-1	TYPE I AND II MOUNTING ASSEMBLIES
03/10	9-2	TYPE III AND IV MOUNTING ASSEMBLIES
10/13	9-3	TYPE V MOUNTING ASSEMBLY
03/10	9-4	TYPE VI MOUNTING ASSEMBLY
03/10	9-5	TYPE VII MOUNTING ASSEMBLY
03/10	9-6	TYPE VIII MOUNTING ASSEMBLY
03/10	9-7	TYPE IX MOUNTING ASSEMBLY
03/10	9-8	TYPE X MOUNTING ASSEMBLY
03/10	9-9	TYPE XI MOUNTING ASSEMBLY
	T.S. 10	**MOUNTING CASTINGS - SIGNAL**
03/10	10-1	MISCELLANEOUS SIGNAL MOUNTING PARTS
03/10	10-2	MAST ARM SIGNAL MOUNTING PLUMBIZER
03/10	10-3	SIGNAL MOUNTING POLE PLATE DETAILS
03/10	10-4	TERMINAL COMPARTMENT, SIDE MOUNTED AND POLE TOP MOUNTED
	T.S. 11	**PEDESTRIAN DETAILS**
03/15	11-1	TYPE I PEDESTRIAN PUSH BUTTON HOUSING ASSEMBLY
03/15	11-2	CAN STYLE PEDESTRIAN PUSH BUTTON
	T.S. 12	**FLASHERS**
03/10	12-1 SHT 1	ADVANCE WARNING FLASHER POLE DETAIL
03/10	12-1 SHT 2	ADVANCE WARNING FLASHER POLE SIGN MOUNTING DETAILS
03/10	12-1 SHT 3	ADVANCE WARNING FLASHER POLE DETAIL
	T.S. 13	**ILLUMINATION - SIGNS**
03/10	13-1	SIGN LIGHTING DETAIL FOR TUBULAR SIGN STRUCTURES
03/10	13-2	FUSE PANEL DETAILS FOR SIGN LIGHTING
03/15	13-3	PLACEMENT OF LIGHTING FIXTURES FOR OVERHEAD SIGNS
	T.S. 14	**ILLUMINATION - SPECIAL**
03/10	14-1 SHT 1	HIGH PRESSURE SODIUM (HPS) LAMPS
03/10	14-1 SHT 2	HIGH PRESSURE SODIUM (HPS) LAMPS
03/10	14-1 SHT 3	HIGH PRESSURE SODIUM (HPS) LAMPS
03/10	14-2	PEDESTRIAN BRIDGE LIGHTING DETAILS

REVISION DATE	STANDARD NUMBER	SUBJECT : TRAFFIC SIGNALS AND LIGHTING DETAILS
	T.S 15	**SPAN WIRE SIGNALS AND LIGHTING**
04/19	15-0 SHT 1	GENERAL NOTES
04/19	15-0 SHT 2	GENERAL NOTES
04/19	15-0 SHT 3	GENERAL NOTES
04/19	15-1 SHT 1	STEEL POLE TYPICAL DETAILS
04/19	15-1 SHT 2	STEEL POLE FOUNDATION DETAILS
04/19	15-1 SHT 3	STEEL POLE ATTACHMENT DETAILS
04/19	15-1 SHT 4	WOOD POLE TYPICAL DETAILS
04/19	15-1 SHT 5	WOOD POLE TYPICAL DETAILS
04/19	15-1 SHT 6	TYPICAL DETAILS
01/12	15-2	HANGER AND BALANCE ADJUSTER TYPICAL DETAILS
01/12	15-3 SHT 1	SIGNAL ASSEMBLY DETAILS
01/12	15-3 SHT 2	CONDUCTOR ENTRANCE HEADS TYPE A, B AND C
01/12	15-3 SHT 3	ALUMINUM PIPE EXTENSION AND TYPICAL DETAILS
01/12	15-4 SHT 1	ADJUSTABLE SIGN HANGER TYPICAL DETAILS
01/12	15-4 SHT 2	ADJUSTABLE SIGN HANGER TYPICAL DETAILS
01/12	15-4 SHT 3	ADJUSTABLE SIGN HANGER TYPICAL DETAILS
01/12	15-5	ADJUSTABLE HANGER TOP AND EXTENSION DETAILS
01/12	15-6	SIGNAL TETHER CLAMP TYPICAL DETAILS
01/12	15-7	POLE BAND TYPICAL DETAILS
01/12	15-8	WEATHERHEAD TYPICAL DETAILS

ADOT STANDARD DRAWINGS
REVISION DATES and STANDARD NO.'s REVIEW

	NAME	DATE
TRAFFIC SIGNAL AND LIGHTING STANDARDS	JACKSON MODRAK, EE	08/2026

PROJECT NO. 010 CH 383 F0728 01C — 1C-2 OF 200

RECORD DRAWING DATA — FEDERAL ID NO. 010-F(238)T — REC. DWG. DATE — OF

ADOT STANDARD DRAWINGS

ITS STANDARDS
EFFECTIVE OCTOBER 2021

REVISION DATE	STANDARD NUMBER	SUBJECT : ITS STANDARDS
July-14	FM-0.01	SYMBOLS AND ABBREVIATIONS
July-20	FM-1.01	TRENCH DETAILS, FMS TRUNKLINE
July-20	FM-1.02	TRENCH UNDER PAVEMENT, FMS TRUNKLINE
Aug-13	FM-1.03	BURIED CONDUIT AROUND OBSTRUCTION, DIRECTIONAL DRILLING
Aug-13	FM-1.04	CONDUIT REQUIREMENTS FOR DMS, RMC TO PVC CONDUIT CONNECTION, THROUGH WALL CONDUIT
Aug-13	FM-1.05	CONDUIT MOUNTING DETAILS
Aug-13	FM-1.06	CONDUIT EXPANSION, COUPLING AND JUNCTION BOX, INSTALLATION PLAN
Aug-13	FM-1.07	FMS TRUNK LINE IN BOX GIRDER BRIDGE
Aug-13	FM-1.08	FMS TRUNKLINE IN I-BEAM OR I-GIRDER BRIDGE
Aug-13	FM-2.01	PULL BOX ADJACENT TO FMS PULL BOX
Aug-13	FM-2.02	PULL BOX NO. 9 CABINET CONDUIT INTERFACE PLANS
Oct-21	FM-2.03	PULL BOX NO. 9 DETAILS
Aug-13	FM-2.04	NO. 9 PULL BOX CONDUIT ROUTING AND CABLE RACKING DETAILS
Aug-13	FM-2.05	No. 9 PULL BOX TORSION ASSIST COVER
Aug-13	FM-2.06	PULL BOX NO. 7 TYPICAL INSTALLATION
Aug-13	FM-2.07	BURIED PULL BOX NO. 7 TYPICAL INSTALLATION
Oct-21	FM-2.08	SPLIT NO. 9 PULL BOX
Aug-13	FM-3.01	RAMP METER CABINET DETAILS (SHEET 1 of 2)
Aug-13	FM-3.02	RAMP METER CABINET DETAILS (SHEET 2 of 2)
Aug-13	FM-3.03	RAMP METER CABINET SPECIAL DETAILS
Aug-13	FM-3.04	RAMP METER CABINET ACCESSORIES
Aug-13	FM-3.05	RAMP METER FIELD PANEL DETAILS
Aug-13	FM-3.06	RAMP METER FIELD PANEL CONNECTIONS
Aug-13	FM-3.07	RAMP METER SIGNAL POWER INTERRUPT RELAY AND PIN ASSIGNMENTS
Aug-13	FM-3.08	POWER DISTRIBUTION ASSEMBLY CONNECTOR AND INSTALLATION DETAILS
Aug-13	FM-3.09	POWER DISTRIBUTION ASSEMBLY #4 (PDA4) SCHEMATIC DIAGRAM
Aug-13	FM-3.10	RAMP METER CI HARNESS CONNECTIONS
Aug-13	FM-3.11	CCTV CABINET DETAILS (SHEET 1 of 2)
Aug-13	FM-3.12	CCTV CABINET DETAILS (SHEET 2 of 2)
Aug-13	FM-3.13	CABINET NUMBER DECAL DETAIL
Aug-13	FM-3.14	TRANSFORMER CABINET, EXTERNAL POWER DISCONNECT
Aug-13	FM-3.15	TRANSFORMER, 3kVA & 7.5kVA, DRY TYPE DETAILS AND WIRING DIAGRAMS
Aug-13	FM-3.16	TRANSFORMER, 10kVA & 25kVA, DRY TYPE DETAILS AND WIRING DIAGRAMS
Aug-13	FM-3.17	CLEAR ZONES, UNPROTECTED EQUIPMENT
Aug-13	FM-3.18	TYPE II LOAD CENTER
Aug-13	FM-3.19	TYPE IV LOAD CENTER FOUNDATION AND CABINET DETAIL
Aug-13	FM-3.20	TYPE IV MODIFIED LOAD CENTER
July-14	FM-3.21	RAMP METER CABINET FOUNDATION W/O TRANSFORMER
July-14	FM-3.22	RAMP METER CABINET WITH TRANSFORMER, FOUNDATION
July-14	FM-3.23	SKYLINE 336S DMS CABINET FOUNDATION DETAILS
July-14	FM-3.23A	SKYLINE 332 DMS CABINET FOUNDATION DETAILS
July-14	FM-3.24	SKYLINE 336S DMS & TRANSFORMER CABINET FOUNDATION DETAILS
July-14	FM-3.24A	SKYLINE 332 DMS & TRANSFORMER CABINET FOUNDATION DETAILS
July-14	FM-3.25	NOT USED
Aug-13	FM-3.26	TRANSFORMER CABINET FOUNDATION
Oct-17	FM-3.27	DAKTRONICS DMS CABINET FOUNDATION DETAILS
Oct-17	FM-3.28	DAKTRONICS DMS & TRANSFORMER CABINET FOUNDATION DETAILS
Aug-13	FM-3.29	DMS CABINET ADAPTER AND ELEVATOR BASE DETAILS
Aug-13	FM-4.01	CCTV CABINET BLOCK DIAGRAM
Aug-13	FM-4.02	FREEWAY MANAGEMENT SYSTEM CABINET BLOCK ETHERNET DIAGRAM
Aug-13	FM-4.03	DMS CABINET ETHERNET BLOCK DIAGRAM
Aug-13	FM-5.01	DETECTION DEFINITION
Jun-16	FM-5.02	TYPICAL DETECTOR LOOP INSTALLATION DETAILS
Aug-13	FM-5.03	TYPICAL PREFORMED DETECTOR LOOP INSTALLATION DETAILS
Aug-13	FM-5.04	DETECTOR LOOP IN AC PAVEMENT INSTALLATION LAYOUT
Aug-13	FM-5.05	DETECTOR LOOP IN PCCP PAVEMENT INSTALLATION LAYOUT
Aug-13	FM-5.06	DETECTOR LOOP TEST FORM 1
Aug-13	FM-5.07	DETECTOR LOOP TEST FORM 2 PART A
Aug-13	FM-5.08	DETECTOR LOOP TEST FORM 2 PART B
Apr-19	FM-6.01	RAMP METER DETAILS
Apr-19	FM-6.02	SINGLE-LANE RAMP METER
Apr-19	FM-6.03	SINGLE-LANE RAMP METER WITH FRONTAGE ROAD
Apr-19	FM-6.04	TWO-LANE RAMP METER
Apr-19	FM-6.05	TWO-LANE RAMP METER WITH FRONTAGE ROAD
Apr-19	FM-6.06	RAMP METER WITH OBSTRUCTION INSTALLATION DETAILS
Apr-19	FM-7.01	CCTV POLE CCTV CABINET MOUNTING DETAILS AND FIELD ORIENTATION
Apr-19	FM-7.02	CCTV POLE AND MOUNTING DETAILS
Apr-19	FM-7.03	CCTV POLE MOUNTING PLATE DETAILS

ADOT STANDARD DRAWINGS
REVISION DATES and STANDARD NO.'s REVIEW

	NAME	DATE
ITS STANDARD DRAWINGS	RACHEL GRANO, PE	08/2026

PROJECT NO. 010 CH 383 F0728 01C — 1E OF 200

RECORD DRAWING DATA | FEDERAL ID NO. 010-F(238)T | REC. DWG. DATE | OF

1. SPILL PREVENTION, CONTROL, AND COUNTERMEASURES – CWA SECTION 311

If total above-ground storage capacity, including mobile re-fuelers stationed on-site, is greater than 1,320 gallons of oil (oils, greases, fuel, asphalt, and asphalt derivatives), where a spill has the potential to reach Waters of the US, the Contractor shall prepare a SPCC plan per contract specifications in Section 104.16 (C) of the Standard Specifications.

2. SURFACE WATER POLLUTION PREVENTION – CWA SECTION 402

☑ Arizona Pollutant Discharge Elimination System (AZPDES) CGP coverage applies (104SWDEQ needed)

3. WORK IN WATERS OF THE UNITED STATES – CWA SECTION 404/401

☑ No Permit Required; Refer to Section 104.16 (D) of the Standard Specifications for General Requirements

4. BIOLOGY PROGRAM – ESA SECTION 7; MBTA, ARIZONA REVISED STATUTES TITLE 17

BIO-1: Environmental Awareness, Monitoring and Avoidance ☑ N/A

BIO-2: Migratory Bird Treaty Act (MBTA) ☐ N/A

The contractor shall avoid nests with relocation directions.

BIO-2A: General Seasonal Restrictions for MBTA, refer to seasonal dates in EPIC and general requirements in 104.16(E) of the Standard Specifications.

If construction occurs during the migratory bird breeding season: March 1 to August 31 refer to Section 104.16 BIO-2 of the specifications for direction.

BIO-2D: MBTA – Active Cliff Swallow Nests ☑ N/A

BIO-3: Burrowing Owls ☑ N/A

BIO-4: Bats ☑ N/A

BIO-5: Sonoran Desert Tortoise ☒ No ☐ Yes

5. VEGETATION PROTECTION PROGRAM – CWA SECTION 402, EO 13122

General (applies to all projects); The contractor shall comply with the requirements specified in Section 104.16 (F) of the Special Provisions and Section 104.16 (B) of the Standard Specifications.

☑ Noxious Species Control Plan (NSCP) required

6. CULTURAL RESOURCES PROGRAM

☑ No Cultural Resources Program Action Required; See Std. Spec. 107.05 and 107.06 for General Requirements

7. HAZARDOUS MATERIALS PROGRAM

General (applies to all projects); See Std. Spec. 107.07 for General Requirements.

☐ No Hazardous Materials Program Action Required

Is Asbestos present? ☑ No ☐ Yes

Is a NESHAP notice required? ☐ No ☒ Yes

If yes, coordination with the ADOT Hazardous Materials Specialist is required and the NESHAP notification shall be submitted at least ten (10) business days prior to initiation of construction activities to: Arizona Department of Environmental Quality Air Quality Division

Is Lead-based paint present? ☐ No ☒ Yes

Is a Lead Based Paint Abatement Plan needed? ☐ No ☒ Yes ☐ Other

Refer to Section 10 of the EPIC Sheet for Lead Based Paint information and contact ADOT Hazardous Materials Specialist.

8. NOISE PROGRAM

☑ No Noise Program Specific Project Action Required; See Std. Spec. 104.08 for General Requirements

9. AIR QUALITY PROGRAM

☑ No Air Quality Program Action Required; See Std. Spec. 104.08 for General Requirements

10. OTHER ENVIRONMENTAL ISSUES

Project Specific Environmental Commitments: ☐ N/A

- The contractor shall not utilize any abrasive tools or methods for the removal or modification of the painted scale components or weigh master booth angle iron painted steps that would disturb the leadbased paint. This includes, but is not limited to, sawing, grinding, sanding, or heating.

- For orange/yellow median paint removal, yellow scale components paint removal, and orange, gray, and white master booth angle iron steps paint removal:
  o Prior to beginning any work, an approved contractor shall develop and implement a Lead-Based Paint Removal and Abatement Plan for the removal of the lead-based paint, Toxicity Characteristic Leaching Procedure testing of the generated waste stream, and proper disposal of the waste stream derived from the removal of the red curb and yellow median paint within the project limits. The contractor shall select a lead abatement contractor that meets the qualification requirements specified within the special provisions and as approval by the Engineer. The contractor shall follow all applicable federal, state, and local codes and regulations, including Arizona Department of Transportation Standard Specifications for Road and Bridge Construction (2021 Edition), related to the treatment and handling of lead-based paint. The contractor shall submit the Lead-Based Paint Removal and Abatement Plan to the Engineer and the ADOT Environmental Planning Hazardous Materials Coordinator (602.920.3882 or 602.712.7767) for review and approval at least 10 (ten) working days prior to beginning the saw cut and removal work.

- Visible fugitive dust emissions from paint removal shall be controlled through wet or dry (e.g., vacuum) means during the removal process. If the liquid waste stream generated by a water-blasting obliteration method passes the Toxicity Characteristic Leaching Process analysis, it may be used as a dust palliative or for compaction on the project. If the water is not used on the project, it shall be properly disposed of in accordance with all applicable federal, state, and local regulations.

- The contractor shall complete a National Standards for Hazardous Air Pollutants (NESHAP) notification for the work associated with the removal of weighmaster booth building and submit to the Engineer, who shall submit it to the Arizona Department of Transportation environmental planning hazardous material coordinator (602.920.3882 or 602.712.7767) for a five (5) working day review and approval. Upon approval, the contractor shall file the notification with Arizona Department of Environmental Quality (ADEQ) at least ten (10) working days prior to the commencement of work.

Arizona Department of Transportation Environmental Planning Standard Template		
Environmental, Permits, Issues, And Commitments (EPIC) Sheet		
Environmental Planner Name	Morgan Ghods	**R.E. Name**
Environmental Planning Date of Completion	10/21/2025	**R.E. Signature**
FEDERAL ID NO.	010-F(238)T	
PROJECT NO.	010 CH 383 F0728 01C	With the above signature, the R.E. attests that all EPIC work for this project has been satisfactorily completed.
REC DWG DATE:		**OF** **Sheet 1F**

REFERENCES

I-10 010 CH 383
I-10-6-500
I-10-F-502
I-10-IM-10-6(108)
I-10-IM-10-6(117)
I-10-IR-10-6(87)
I-10-NH-010-F(225)

MIDPOINT OF PROJECT

Eastern Zone
State Plane Coordinates
X=1,004,925
Y=458,891

DESIGN DATA

San Simon POE
2025 AADT = Not Applicable
2045 AADT = Not Applicable
Design Speed = 15 MPH

LENGTH OF PROJECT

WB I-10 Cst CL
Sta 4349+95.51 to 4367+60.77 = *1,765.26'*
Gross & Net Length = *1,765.26' - 0.33 Miles*
Mile Post = *383.07 to 383.40*

INDEX OF SHEETS

Sheet No.	Dwg No.	Sheet Type
1	-	Face Sheet
1A-1F	-	ADOT Standard Drawings
2	G-01.01	Design Sheets
3-4	G-02.01-G-02.02	Typical Section Sheets
5-6	G-03.01-G-03.02	Roadway Summary Sheets
7-17	G-04.01-G-04.11	Detail Sheets
18	G-05.01	Survey Control Sheet
19-20	G-06.01-G06.02	Geometric Sheets
21-22	G-07.01-G-07.02	Removal Plan Sheets
23-24	G-08.01-G-08.02	Plan Sheets
25-27	G-09.01-G-09.03	Jointing Sheets
28-36	G-10.01-G-10.09	Staking Sheets
37-39	T-01.01-T-01.03	Traffic Control Sheets
40-43	T-02.01-T-02.04	Construction Phasing Sheets
44-50	T-03.01-T-03.07	Signing Sheets
51-55	T-04.01-T-04.05	Pavement Marking Sheets
56	T-05.01	ITS General Notes
57-68	T-05.02-T-05.13	ITS Sheets
69	T-06.01	Lighting General Notes
70-72	T-06.02-T-06.04	Lighting Sheets
73-118	A001-A861	1 Architectural
119-143	S000-S505	2 Structural
144-155	M00a-M301	3 Mechanical
156-167	P000-P501	4 Plumbing
168-184	E000-E802	5 Electrical
185-188	R-01.01-R-01.04	Landscaping Sheets
189	U-01.01	Utility Site Plan
190-191	U-02.01-U-02.02	Lift Station Sheets
192	U-03.01	Water Oil Separator Plan and Profile
193-196	U-04.01-U-4.04	Well Site Sheets
197	U-05.01	Water Service Line Plan
198-200	U-06.01-U-6.03	Utility Details

EARTHWORK QUANTITIES

	Total
Roadway Excavation	*546 CY*
Shrink	*12 CY*
*Structural Excavation (Hazmat Basin)***	*40 CY*
Shrink	*0 CY*
Drainage Basin Excavation	*53 CY*
Shrink	*0 CY*
*Embankment (Inc. Ground Comp.)**	*232 CY*
Waste	*395 CY*

Import (Not Included Above) *Structure Backfill (Import)* ***	*30 CY*

EARTHWORK FACTORS

Station	Shrink/Swell	Ground Compaction
Project Limits	*5% Shrink*	*0.10'*

** Non Pay Item*
*** Item will be paid for under Item No. 9240058*

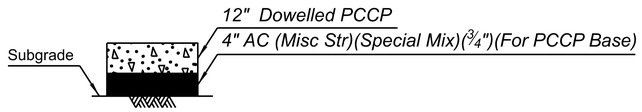

Total Thickness = 16"

SECTION NO. 1
Bypass and Scale Lanes

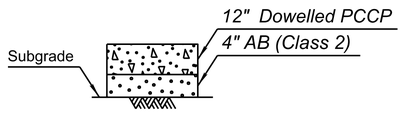

Total Thickness = 16"

SECTION NO. 2
Bypass Lane and Parking

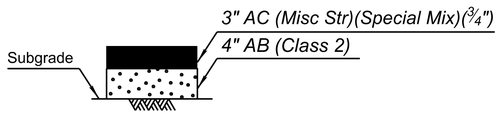

Total Thickness = 7"

SECTION NO. 3
AC Widening and Shoulders

GENERAL NOTES

Roadway plans have been designed utilizing the Construction Standard Drawings (C-Series). Refer to the 1A sheet for a listing of current revision dates.

The project roadway shall be striped by the contractor in accordance with the current edition of the Signing and Marking Standard Drawings (M and S-Series) and the pavement marking plans.

Where only the horizontal location of an existing utility is shown, the location is approximate. Where both horizontal and vertical location of an existing utility is shown, the location has been verified by field survey methods. The contractor shall comply with all current AZ811 laws and Section 107.15 of the specifications.

No new Right of Way nor new Easements are needed for this project.

The average project elevation is 3650'.

Registered Professional Engineer CERTIFICATE NO. 47513 ALLEN R. HATHCOCK Date Signed 09/26/2026 ARIZONA U.S.A.

	NAME	DATE
DESIGN	TJB	09/26
DRAWN	TJB	09/26
CHECKED	ARH	09/26

Kimley»Horn
© 2026 KIMLEY-HORN AND ASSOCIATES, INC.

ARIZONA DEPARTMENT OF TRANSPORTATION
PROJECT DELIVERY AND OPERATIONS DIVISION
PROJECT MANAGEMENT GROUP
DESIGN SHEET

ROUTE I-10
MILEPOST
STRUCTURE NO.

F.H.W.A. Arizona Division

STATE	PROJECT NO.	FEDERAL ID NO.	SHEET NO.	TOTAL SHEETS	RECORD DRAWING
ARIZ.	010 CH 383	010-F(238)T	2	200	

LOCATION SAN SIMON PORT OF ENTRY (POE)
DWG NO. G-01.01
TRACS NO. F0728 01C
___ OF ___

10:56:48 AM 9/22/2026 TJ.Bulhoes K:\PHX_Roadway\Worksets\ADOT_PROJECTS_2022R3_10.12_291728040-F0728-SAN SIMON POE\dgn\Roadway\f0728_ds01_sansimon.dgn

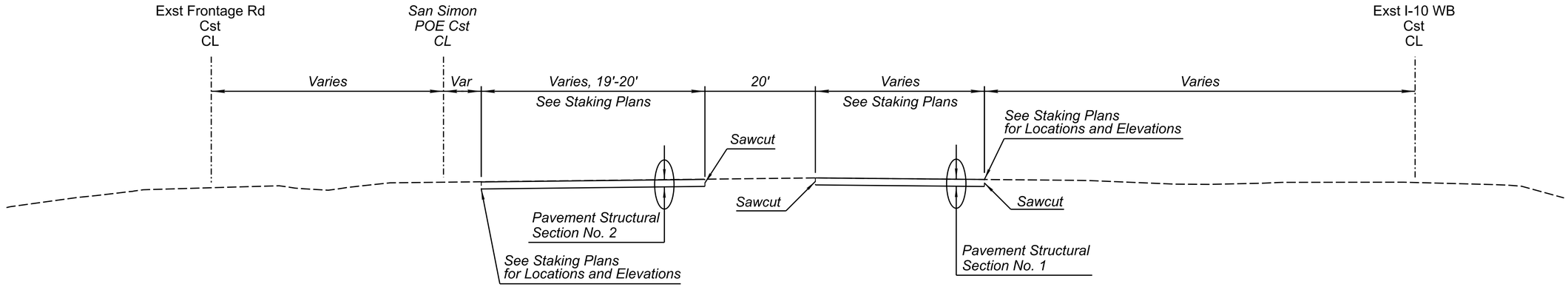

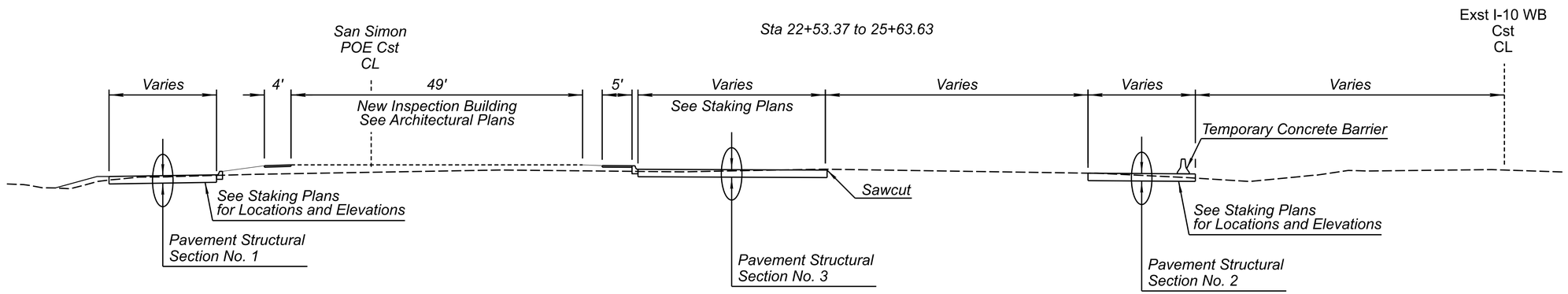

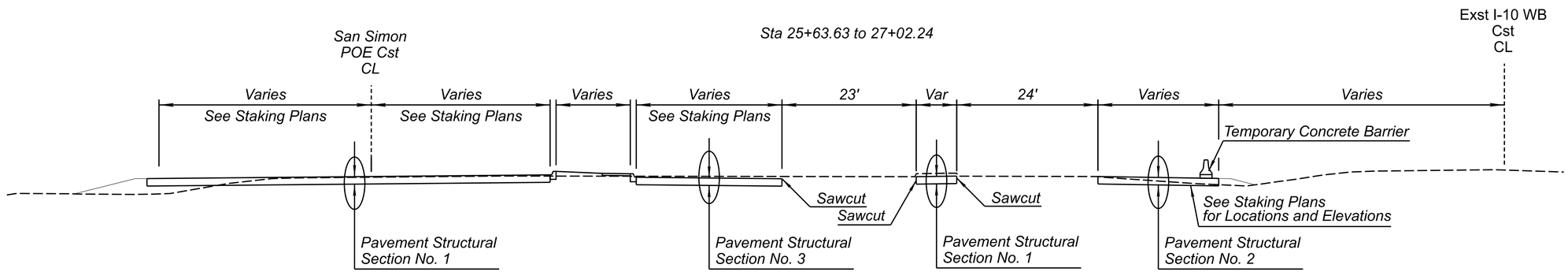

Sta 27+02.24 to 28+97.35

	NAME	DATE
DESIGN	TJB	08/26
DRAWN	ME	08/26
CHECKED	ARH	08/26

Registered Professional Engineer
47513
ALLEN R. HATHCOCK
CERTIFICATE NO.
Date Signed 08/26/26
(Civil)

Kimley»Horn
© 2026 KIMLEY-HORN AND ASSOCIATES, INC.

ARIZONA DEPARTMENT OF TRANSPORTATION
PROJECT DELIVERY AND OPERATIONS DIVISION
PROJECT MANAGEMENT GROUP

SAN SIMON POE
TYPICAL SECTIONS

ROUTE I-10
MILEPOST
STRUCTURE NO.

F.H.W.A. Arizona Division

STATE	PROJECT NO.	FEDERAL ID NO.	SHEET NO.	TOTAL SHEETS	RECORD DRAWING
ARIZ.	010 CH 383	010-F(238)T	3	200	

LOCATION SAN SIMON PORT OF ENTRY (POE)

DWG NO. G-02.01

TRACS NO. F0728 01C

____ OF____

8:06:41 AM 8/14/2026 TJ.Bulhoes K:\PHX_Roadway\Worksets\ADOT_PROJECTS_2022R3_10.12_291728040-F0728-SAN SIMON POE\dgn\Roadway\f0728_typ01_sansimon.dgn

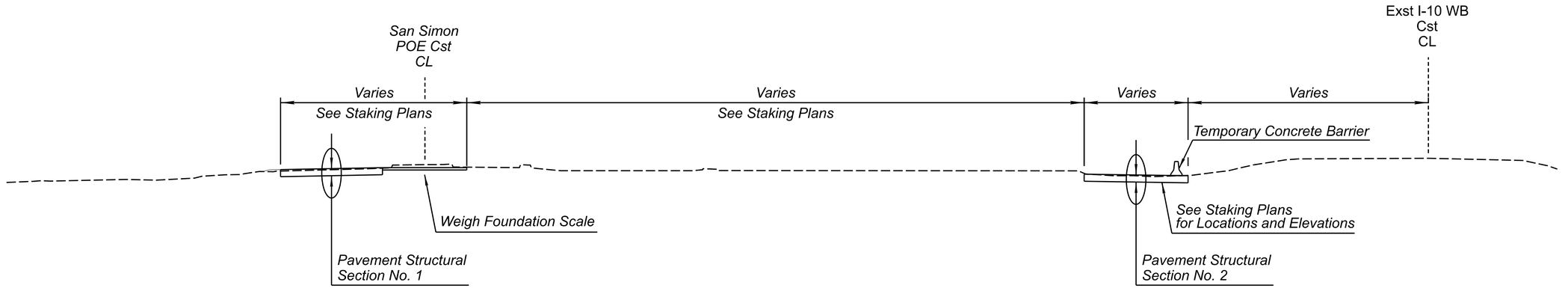

Sta 28+97.35 to 30+00.47

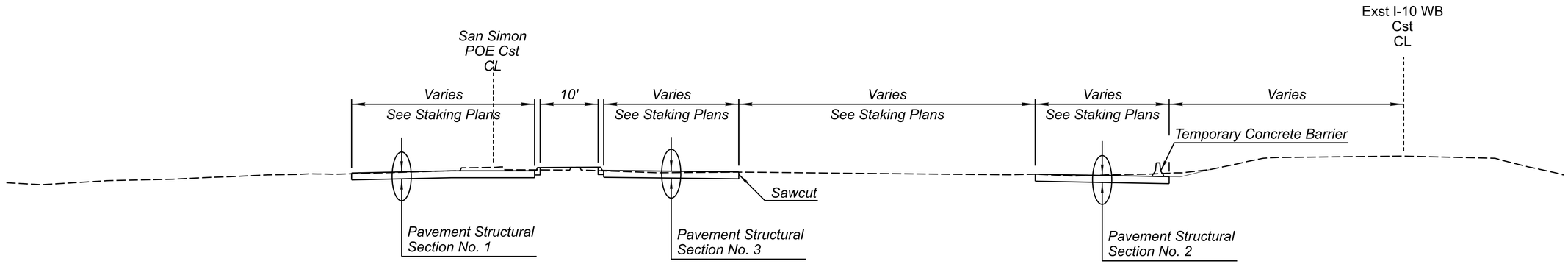

Sta 30+00.47 to 30+89.52

Registered Professional Engineer (Civil)
CERTIFICATE NO.
47513
ALLEN R.
HATHCOCK
Date Signed 08/26/26
Arizona, U.S.A.

	NAME	DATE
DESIGN	TJB	08/26
DRAWN	ME	08/26
CHECKED	ARH	08/26

Kimley»Horn

© 2026 KIMLEY-HORN AND ASSOCIATES, INC.

ARIZONA DEPARTMENT OF TRANSPORTATION
PROJECT DELIVERY AND OPERATIONS DIVISION
PROJECT MANAGEMENT GROUP

SAN SIMON POE
TYPICAL SECTIONS

ROUTE I-10
MILEPOST
STRUCTURE NO.

F.H.W.A. Arizona Division	STATE	PROJECT NO.	FEDERAL ID NO.	SHEET NO.	TOTAL SHEETS	RECORD DRAWING
	ARIZ.	010 CH 383	010-F(238)T	4	200	

LOCATION SAN SIMON PORT OF ENTRY (POE)

DWG NO. G-02.02

TRACS NO. F0728 01C

____ OF ____

8:06:49 AM 8/14/2026 TJ.Bulhoes K:\PHX_Roadway\Worksets\ADOT_PROJECTS_2022R3_10.12_291728040-F0728-SAN SIMON POE\dgn\Roadway\f0728_typ02_sansimon.dgn

Station	X	Plan Reference Number	Remove Exst Concrete Curb (Lin Ft) (Bid Item 2020020)	Type 'A' or 'A1', See Remarks Std C-05.10 (Lin Ft) (Bid Item 9080001)	Type 'G' Std C-05.10 (Lin Ft) (Bid Item 9080031)	Type 'A' PAG (Lin Ft)	TRANSITIONS (EA) Type 1 Std C-05.12	Type 2 Std C-05.12	Type 3 Std C-05.12	Type 4 Std C-05.12	Type 6 Std C-05.12	Type 7 Std C-05.12	Type 8 Std C-05.12	Curb Terminal Section Std C-05.10	Detail G1	Remove Exst Concrete Curb & Gutter (Lin Ft) (Bid Item 2020021)	Type 'B' Std C-05.10 (Lin Ft)	Type 'C' Std C-05.10 (Lin Ft)	Type 'D' h=6", Std C-05.10 (Lin Ft)	Type 'G' h=6", Std C-05.10 (Lin Ft) (Bid Item 90080084)	Type 'G' Std C-05.10 (Lin Ft)	Guardrail Terminal Flare Std C-10.77 (Lin Ft)	Remove Exst Concrete Sidewalk, Driveway, Spillways & Slabs (Sq Ft) (Bid Item 2020025)	Valley Gutter & Apron Std C-05.10 or MAG Std 240 (Sq Ft)	Concrete Driveway CC205-2 (Sq Ft) (Bid Item 9080304)	Concrete Sidewalk Std C-05.20 (Sq Ft)	Sidewalk Ramp, Type 'A' Std C-05.10 (Sq Ft)	Sidewalk Ramp, Type 'B' Std C-05.10 (Sq Ft)	Sidewalk Ramp, Type 'C' Std C-05.10 (Sq Ft)	Sidewalk Ramp, Type 'D' Std C-05.10 (Sq Ft)	Sidewalk Ramp (C-05.30 Detectable Warning & Concrete Landing) (Bid Item 90802297) (Sq Ft)	Sidewalk Ramp, Type 'F' Std C-05.10 (Sq Ft)	Detectable Warning Strip (Sq Ft) (Bid Item 9240038)	Median Paving & Nose Taper See Remarks for Type (Sq Yd)	Remove Exst Fence (Lin Ft)	Fence, Chain Link, Type 1 Std C-12.20, h=See Remarks (Lin Ft)	Chain Link Fence Gate Type 1(72")(Over 13' to 18' Wide)	Fence, See Remarks for Type	REMARKS
San Simon POE Cst CL 20+01.59, Lt	1																																	41				
San Simon POE Cst CL 20+82.34, Lt	2																																	193				
San Simon POE Cst CL 23+86.20, Rt	3														341																								
San Simon POE Cst CL 23+96.52, Rt	4																																	381				
San Simon POE Cst CL 26+91.60, Rt	5														101																								
San Simon POE Cst CL 27+47.83, Rt	6																																	40				
San Simon POE Cst CL 27+51.66, Rt	7														588																								
San Simon POE Cst CL 27+57.30, Rt	8														659																								
San Simon POE Cst CL 29+27.14, Rt	9														75																								
San Simon POE Cst CL 29+38.09, Rt	10																																	358				
San Simon POE Cst CL 20+01.59, Lt	100																																		47			h=48", See Detail F1	
San Simon POE Cst CL 20+71.80, Lt	101																																		208			h=48", See Detail F1	
San Simon POE Cst CL 24+52.10, Rt	102		137																																			A	
San Simon POE Cst CL 24+72.28, Rt	103																										2,451												
San Simon POE Cst CL 24+98.57, Rt	104																											132											
Sheet Total			137												1,764											2,451	132							1,013	255			

NOTES:

1. Transition lengths are included in the respective Curb & Gutter quantity and will not be paid separately.
2. Curb terminal section quantities will not be paid separately and are included in the respective Curb & Gutter Quantities.
3. Variable gutter width quantities at guardrail end terminal and crash cushion locations will not be paid separately and are included in the respective Curb & Gutter Quantities.
4. Lip curb quantities at thrie beam locations will not be paid separately and are included in the respective Curb & Gutter Quantities.

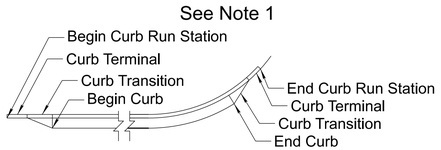

Curb Run Begin and End Stationing

Registered Professional Engineer CERTIFICATE NO. 47513 ALLEN R. HATHCOCK Date Signed 08/26/26

	NAME	DATE
DESIGN	TJB	08/26
DRAWN	TJB	08/26
CHECKED	ARH	08/26

Kimley»Horn

© 2026 KIMLEY-HORN AND ASSOCIATES, INC.

ARIZONA DEPARTMENT OF TRANSPORTATION
PROJECT DELIVERY AND OPERATIONS DIVISION
PROJECT MANAGEMENT GROUP

ROADWAY SUMMARY SHEET

ROUTE I-10
MILEPOST
STRUCTURE NO.

F.H.W.A. Arizona Division

STATE	PROJECT NO.	FEDERAL ID NO.	SHEET NO.	TOTAL SHEETS	RECORD DRAWING
ARIZ.	010 CH 383	010-F(238)T	5	200	

LOCATION SAN SIMON PORT OF ENTRY (POE)

DWG NO. G-03.01

TRACS NO. F0728 01C

___ OF___

8:06:56 AM 8/14/2026 TJ.Bulhoes K:\PHX_Roadway\Worksets\ADOT_PROJECTS_2022R3_10.12_291728040-F0728-SAN SIMON POE\dgn\Roadway\f0728_rsum01.dgn

Station	Plan Reference Number (X)	LOCATION: Remove Exst Concrete Curb (Lin Ft) (Bid Item 2020020)	SINGLE CURB: Type 'A' or 'A1', See Remarks Std C-05.10 (Lin Ft) (Bid Item 9080001)	Type 'G' Std C-05.10 (Lin Ft) (Bid Item 9080031)	Type 'A' FAG (Lin Ft)	CURB & GUTTER: TRANSITIONS (EA) Type 1 Std C-05.12	Type 2 Std C-05.12	Type 3 Std C-05.12	Type 4 Std C-05.12	Type 6 Std C-05.12	Type 7 Std C-05.12	Type 8 Std C-05.12	Curb Terminal Section Std C-05.10	Detail G1	Remove Exst Concrete Curb & Gutter (Lin Ft) (Bid Item 20220021)	Type 'B' Std C-05.10 (Lin Ft)	Type 'C' Std C-05.10 (Lin Ft)	Type 'D' h=6", Std C-05.10 (Lin Ft)	Type 'G' h=6", Std C-05.10 (Lin Ft) (Bid Item 90080084)	Type 'G' Std C-05.10 (Lin Ft)	Guardrail Terminal Flare Std C-10.77 (Lin Ft)	VALLEY GUTTER, DRIVEWAY, SIDEWALK, RAMPS & SLABS: Remove Exst Concrete Sidewalk, Driveway, Spillways & Slabs (Sq Ft) (Bid Item 2020025)	Valley Gutter & Apron Std C-05.10 or MAG Std 240 (Sq Ft)	Concrete Driveway CC205-2 (Sq Ft) (Bid Item 9080304)	Concrete Sidewalk Std C-05.20 (Sq Ft)	Sidewalk Ramp, Type 'A' Std C-05.10 (Sq Ft)	Sidewalk Ramp, Type 'B' Std C-05.10 (Sq Ft)	Sidewalk Ramp, Type 'C' Std C-05.10 (Sq Ft)	Sidewalk Ramp, Type 'D' Std C-05.10 (Sq Ft)	Sidewalk Ramp (C-05.30 Detectable Warning & Concrete Landing) (Bid Item 90802297) (Sq Ft)	Sidewalk Ramp, Type 'F' Std C-05.10 (Sq Ft)	Detectable Warning Strip (Sq Ft) (Bid Item 9240038)	Median Paving & Nose Taper See Remarks for Type (Sq Yd)	FENCE: Remove Exst Fence (Lin Ft)	Fence, Chain Link, Type 1 Std C-12.20, h=See Remarks (Lin Ft)	Chain Link Fence Gate Type 1(72")(Over 13' to 18' Wide)	Fence, See Remarks for Type	REMARKS
San Simon POE Cst CL 25+05.91, Rt	105		202																																		A
San Simon POE Cst CL 25+10.28, Rt	106																																	221			h=72", See Detail F2
San Simon POE Cst CL 26+41.87, Rt	107																																		2		
San Simon POE Cst CL 25+09.28, Rt	108		140																																		A
San Simon POE Cst CL 26+99.24, Rt	109		186																																		A
San Simon POE Cst CL 27+39.45, Rt	110		11																																		A
San Simon POE Cst CL 29+22.66, Rt	111																						765														
San Simon POE Cst CL 29+37.88, Rt	112		147																																		A
San Simon POE Cst CL 30+25.88, Rt	113		95										X	X																							A
San Simon POE Cst CL 34+90.98, Rt	114																																	46			h=72", See Detail F3
Sheet Total			781																				765											267	2		

NOTES:

1. Transition lengths are included in the respective Curb & Gutter quantity and will not be paid separately.
2. Curb terminal section quantities will not be paid separately and are included in the respective Curb & Gutter Quantities.
3. Variable gutter width quantities at guardrail end terminal and crash cushion locations will not be paid separately and are included in the respective Curb & Gutter Quantities.
4. Lip curb quantities at thrie beam locations will not be paid separately and are included in the respective Curb & Gutter Quantities.

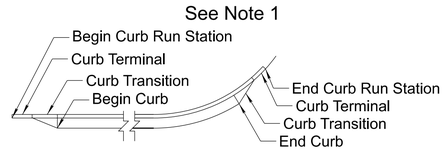

Curb Run Begin and End Stationing

Registered Professional Engineer CERTIFICATE NO. 47513 ALLEN R. HATHCOCK Date Signed 08/26/26

	NAME	DATE
DESIGN	TJB	08/26
DRAWN	TJB	08/26
CHECKED	ARH	08/26

Kimley»Horn

© 2026 KIMLEY-HORN AND ASSOCIATES, INC.

ARIZONA DEPARTMENT OF TRANSPORTATION
PROJECT DELIVERY AND OPERATIONS DIVISION
PROJECT MANAGEMENT GROUP

ROADWAY SUMMARY SHEET

ROUTE I-10 | MILEPOST | STRUCTURE NO.

F.H.W.A. Arizona Division

STATE	PROJECT NO.	FEDERAL ID NO.	SHEET NO.	TOTAL SHEETS	RECORD DRAWING
ARIZ.	010 CH 383	010-F(238)T	6	200	

LOCATION: SAN SIMON PORT OF ENTRY (POE)

TRACS NO. F0728 01C

DWG NO. G-03.02

___ OF___

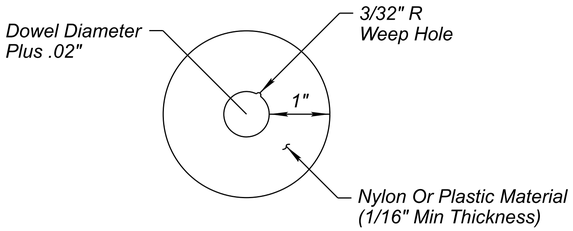

RETENTION DISC

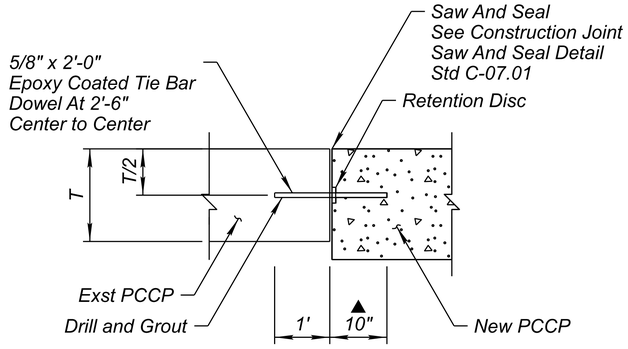

SECTION
LONGITUDINAL CONSTRUCTION (LC1) JOINT

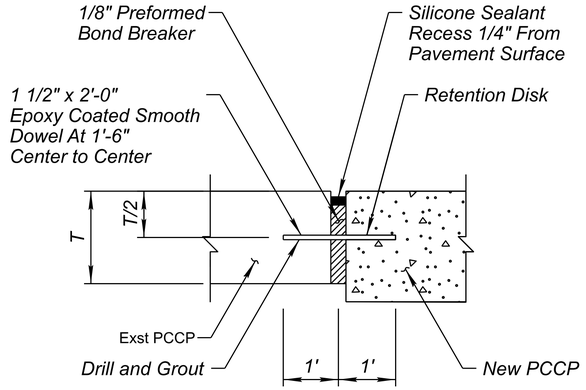

SECTION
MODIFIED EXPANSION E JOINT

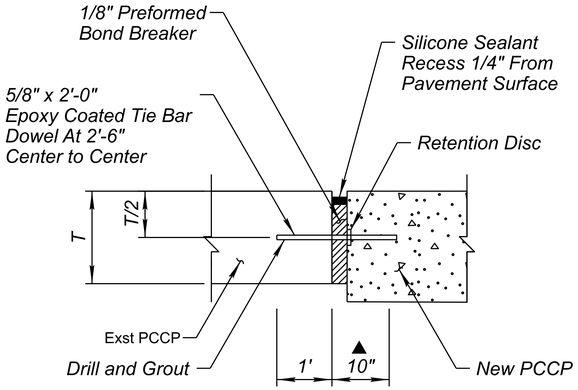

SECTION
MODIFIED LONGITUDINAL CONSTRUCTION (LC2) JOINT

NOTE:
1. *Per coring analysis, existing PCCP might be thinner than proposed section. Dowels shall be centered on existing PCCP thickness*
▲ 2. *See Assembly Placement and Edge Clearance Detail, Std Dwg C-07.02*

DETAIL A1

PCCP REPAIR

Registered Professional Engineer — CERTIFICATE No. 47513 — ALLEN R. HATHCOCK — Date Signed 08/26/26

	NAME	DATE
DESIGN	TJB	08/26
DRAWN	TJB	08/26
CHECKED	ARH	08/26

Kimley»Horn
© 2026 KIMLEY-HORN AND ASSOCIATES, INC.

ARIZONA DEPARTMENT OF TRANSPORTATION
PROJECT DELIVERY AND OPERATIONS DIVISION
PROJECT MANAGEMENT GROUP

DETAIL A1
PCCP REPLACEMENT

ROUTE I-10
MILEPOST
STRUCTURE NO.

F.H.W.A. Arizona Division

STATE	PROJECT NO.	FEDERAL ID NO.	SHEET NO.	TOTAL SHEETS	RECORD DRAWING
ARIZ.	010 CH 383	010-F(238)T	7	200	

LOCATION SAN SIMON PORT OF ENTRY (POE)

DWG NO. G-04.01

TRACS NO. F0728 01C

____ OF____

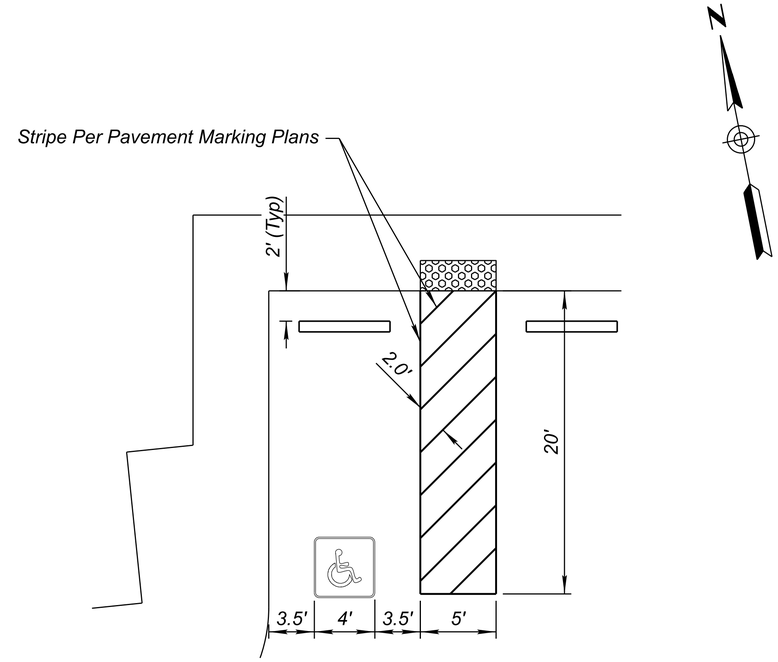

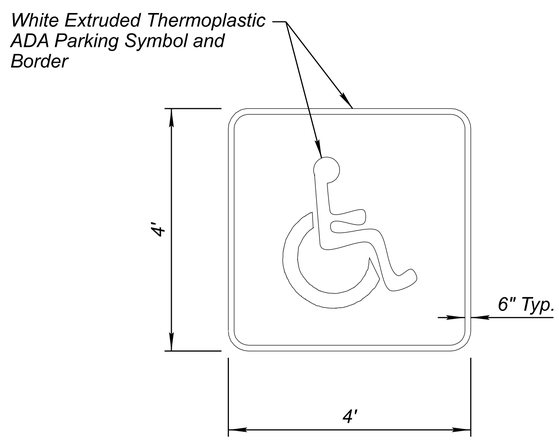

DETAIL B1

ADA PARKING

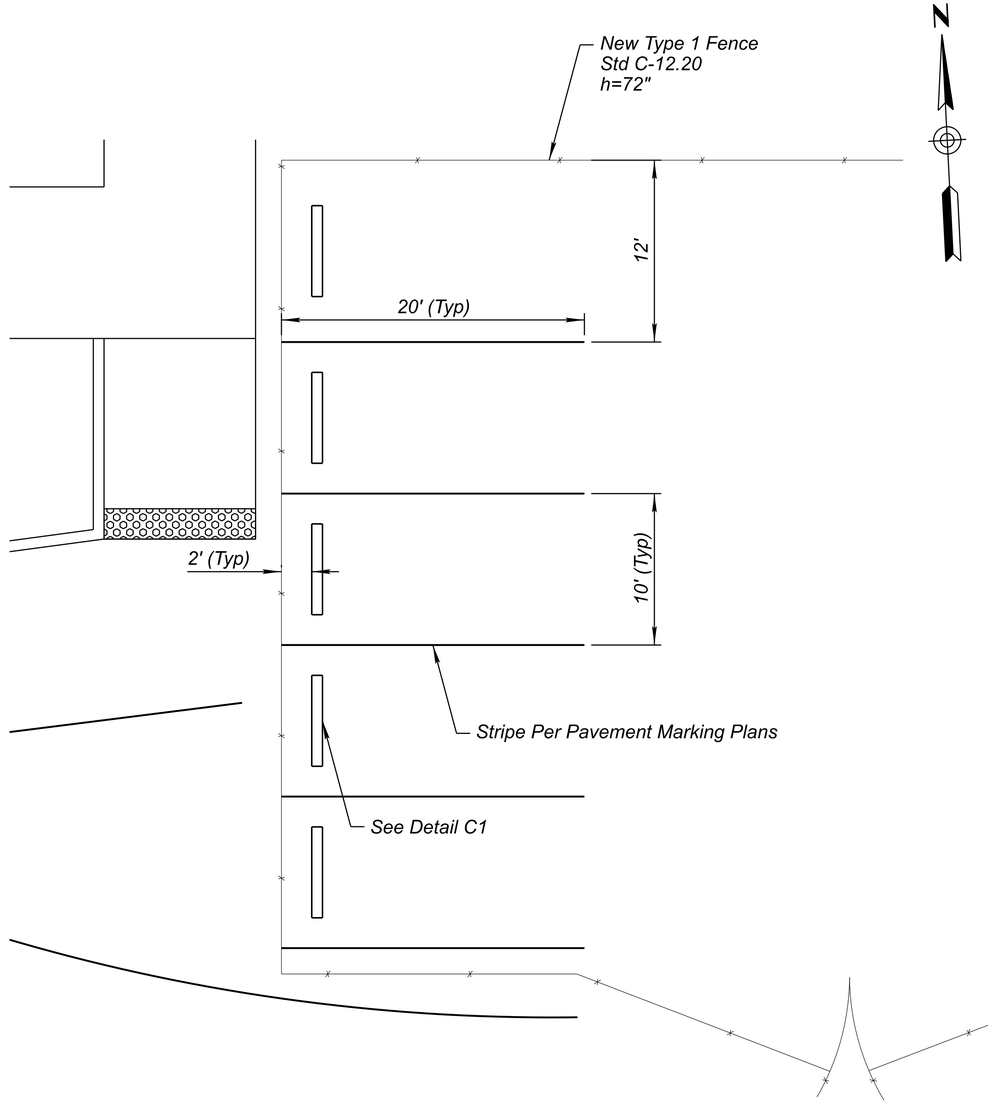

DETAIL B2

PARKING STRIPING/TIRE STOP

	NAME	DATE
DESIGN	TJB	08/26
DRAWN	TJB	08/26
CHECKED	ARH	08/26

Registered Professional Engineer
CERTIFICATE NO.
47513
ALLEN R. HATHCOCK
Date Signed 08/26/26
ARIZONA U.S.A.

Kimley»Horn

© 2026 KIMLEY-HORN AND ASSOCIATES, INC.

ARIZONA DEPARTMENT OF TRANSPORTATION
PROJECT DELIVERY AND OPERATIONS DIVISION
PROJECT MANAGEMENT GROUP

DETAIL B1 & B2
PARKING DETAILS

ROUTE I-10
MILEPOST
STRUCTURE NO.

F.H.W.A. Arizona Division	STATE	PROJECT NO.	FEDERAL ID NO.	SHEET NO.	TOTAL SHEETS	RECORD DRAWING
	ARIZ.	010 CH 383	010-F(238)T	8	200	

LOCATION SAN SIMON PORT OF ENTRY (POE)

DWG NO. G-04.02

TRACS NO. F0728 01C

___ OF ___

8:07:39 AM 8/14/2026 TJ.Bulhoes K:\PHX_Roadway\Worksets\ADOT_PROJECTS_2022R3_10.12_291728040-F0728-SAN SIMON POE\dgn\Roadway\f0728_dtb01_sansimon.dgn

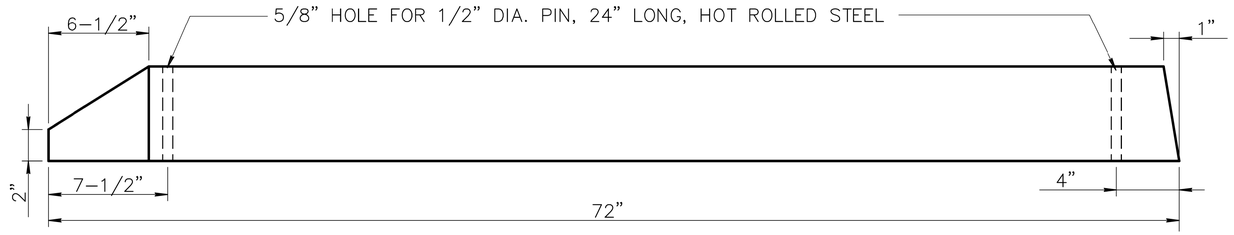

TYPE A

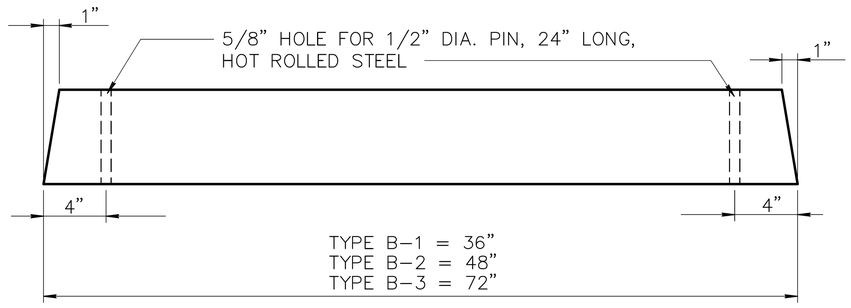

TYPE B–1, B–2, AND B–3

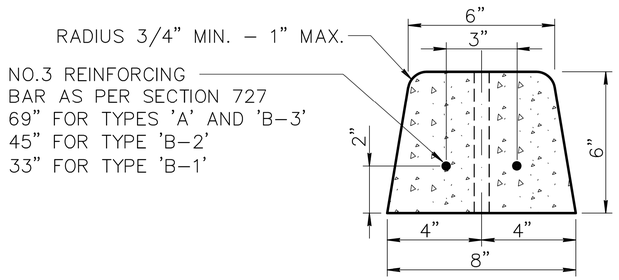

TYPICAL SECTION

NOTES:

1. DIMENSIONAL AND REINFORCEMENT CHANGES WILL BE PERMITTED UPON PRIOR WRITTEN APPROVAL OF THE ENGINEER.
2. UNLESS OTHERWISE NOTED, CONCRETE SHALL BE CLASS 'A' PER SECTION 725.

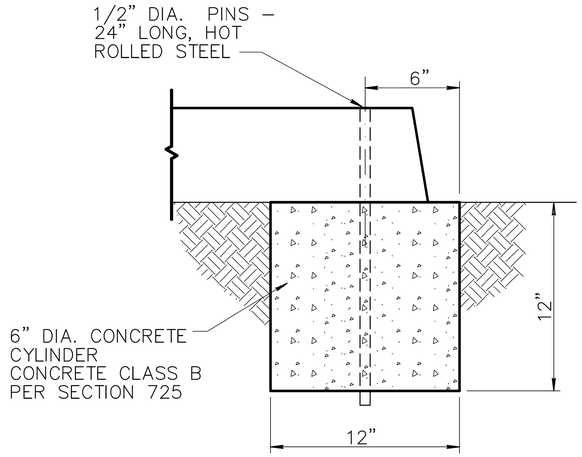

SAFETY CURB
INSTALLATION ON DIRT

DETAIL NO.			REVISED	DETAIL NO.
150	MARICOPA ASSOCIATION of GOVERNMENTS STANDARD DETAIL ENGLISH	PRECAST SAFETY CURB	01–01–2025	150

DETAIL C1

PRECAST SAFETY CURB

Registered Professional Engineer (Civil) CERTIFICATE NO. 47513 ALLEN R. HATHCOCK Date Signed 08/14/2026 ARIZONA, U.S.A.

	NAME	DATE
DESIGN	TJB	08/26
DRAWN	TJB	08/26
CHECKED	ARH	08/26

Kimley»Horn

© 2026 KIMLEY-HORN AND ASSOCIATES, INC.

ARIZONA DEPARTMENT OF TRANSPORTATION
PROJECT DELIVERY AND OPERATIONS DIVISION
PROJECT MANAGEMENT GROUP

DETAIL C1
PRECAST SAFETY CURB

ROUTE I-10
MILEPOST
STRUCTURE NO.

F.H.W.A. Arizona Division

STATE	PROJECT NO.	FEDERAL ID NO.	SHEET NO.	TOTAL SHEETS	RECORD DRAWING
ARIZ.	010 CH 383	010-F(238)T	9	200	

LOCATION SAN SIMON PORT OF ENTRY (POE)

DWG NO. G-04.03

TRACS NO. F0728 01C

___ OF ___

8:07:46 AM 8/14/2026 TJ.Bulhoes K:\PHX_Roadway\Worksets\ADOT_PROJECTS_2022R3_10.12_291728040-F0728-SAN SIMON POE\dgn\Roadway\f0728_dtc01_sansimon.dgn

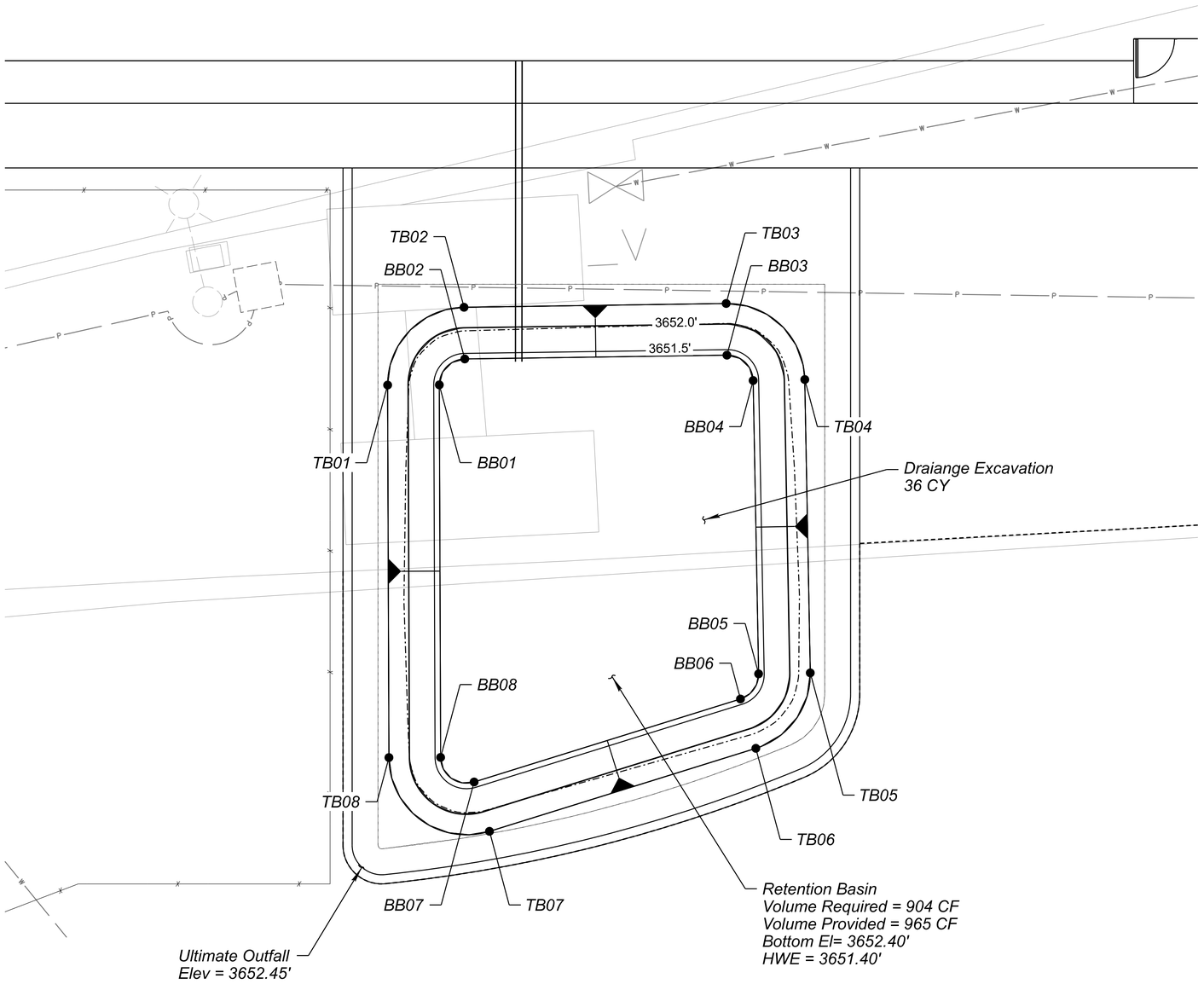

N

V Req = 904 CF
V Prov = 965 CF

TOP OF BASIN CONTROL

Point	Easting	Northing	Elevation
TB01	1,005,089.32	459,013.76	3652.4'
TB02	1,005,095.53	459,019.47	3652.4'
TB03	1,005,115.82	459,018.74	3652.4'
TB04	1,005,121.60	459,012.55	3652.4'
TB05	1,005,120.87	458,989.86	3652.4'
TB06	1,005,116.37	458,984.24	3652.4'
TB07	1,005,095.45	458,978.86	3652.4'
TB08	1,005,087.97	458,984.96	3652.4'

BOTTOM OF BASIN CONTROL

Point	Easting	Northing	Elevation
BB01	1,005,093.32	459,013.57	3651.4'
BB02	1,005,095.39	459,015.48	3651.4'
BB03	1,005,115.67	459,014.74	3651.4'
BB04	1,005,117.60	459,012.68	3651.4'
BB05	1,005,116.87	458,989.98	3651.4'
BB06	1,005,115.37	458,988.11	3651.4'
BB07	1,005,094.46	458,982.74	3651.4'
BB08	1,005,091.96	458,984.77	3651.4'

DETAIL D1

RETENTION BASIN DETAIL

Registered Professional Engineer (Civil)
CERTIFICATE NO.
47513
ALLEN R. HATHCOCK
Date Signed 08/26/26

	NAME	DATE
DESIGN	RJR	08/26
DRAWN	TJB	08/26
CHECKED	RJR	08/26

Kimley»Horn

© 2026 KIMLEY-HORN AND ASSOCIATES, INC.

ARIZONA DEPARTMENT OF TRANSPORTATION
PROJECT DELIVERY AND OPERATIONS DIVISION
PROJECT MANAGEMENT GROUP

DETAIL D1
RETENTION BASIN DETAIL

ROUTE I-10
MILEPOST
STRUCTURE NO.

F.H.W.A. Arizona Division	STATE	PROJECT NO.	FEDERAL ID NO.	SHEET NO.	TOTAL SHEETS	RECORD DRAWING
	ARIZ.	010 CH 383	010-F(238)T	10	200	

LOCATION SAN SIMON PORT OF ENTRY (POE)

TRACS NO. F0728 01C

DWG NO. G-04.04

___ OF ___

8:08:15 AM 8/14/2026 TJ.Bulhoes K:\PHX_Roadway\Worksets\ADOT_PROJECTS_2022R3_10.12_291728040-F0728-SAN SIMON POE\dgn\Drainage\f0728_dtd01.dgn

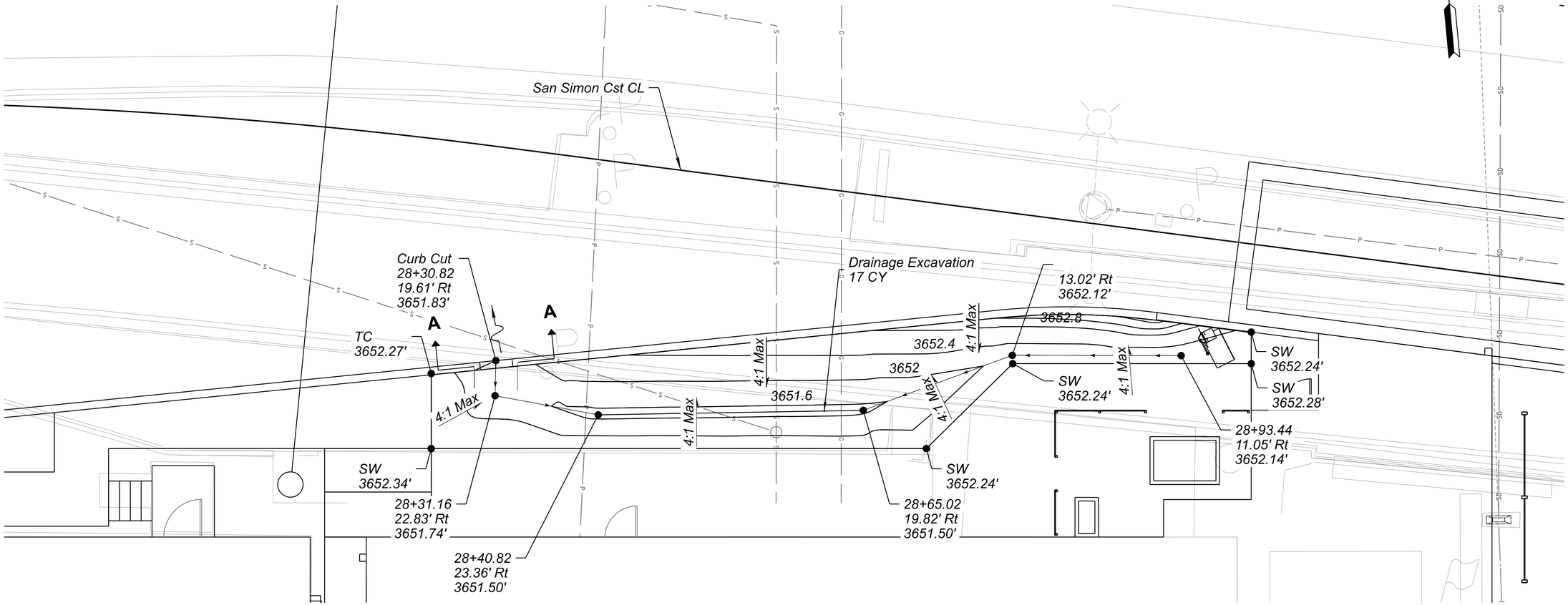

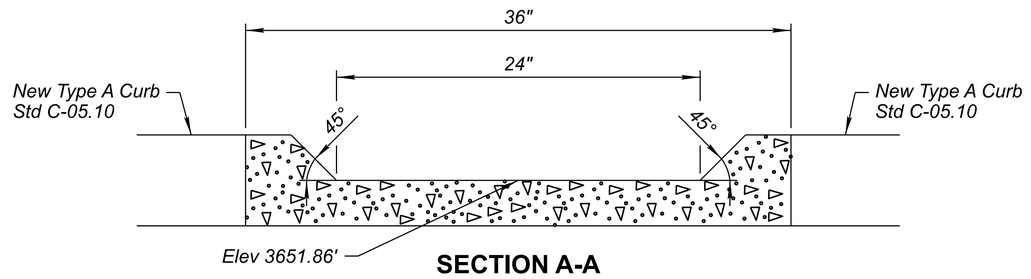

SECTION A-A

DETAIL D2

DRAINAGE SWALE DETAIL

	NAME	DATE
DESIGN	RJR	08/26
DRAWN	TJB	08/26
CHECKED	RJR	08/26

Kimley»Horn

© 2026 KIMLEY-HORN AND ASSOCIATES, INC.

Registered Professional Engineer — CERTIFICATE NO. 47513 — ALLEN R. HATHCOCK — State of Arizona — Date Signed 08/14/26

ARIZONA DEPARTMENT OF TRANSPORTATION
PROJECT DELIVERY AND OPERATIONS DIVISION
PROJECT MANAGEMENT GROUP

DETAIL D2
DRAINAGE SWALE DETAIL

ROUTE I-10
MILEPOST
STRUCTURE NO.

F.H.W.A. Arizona Division	STATE	PROJECT NO.	FEDERAL ID NO.	SHEET NO.	TOTAL SHEETS	RECORD DRAWING
	ARIZ.	010 CH 383	010-F(238)T	11	200	

LOCATION SAN SIMON PORT OF ENTRY (POE)

TRACS NO. F0728 01C

DWG NO. G-04.05

___ OF ___

8:08:26 AM 8/14/2026 TJ.Bulhoes K:\PHX_Roadway\Worksets\ADOT_PROJECTS_2022R3_10.12_291728040-F0728-SAN SIMON POE\dgn\Drainage\f0728_dtd02.dgn

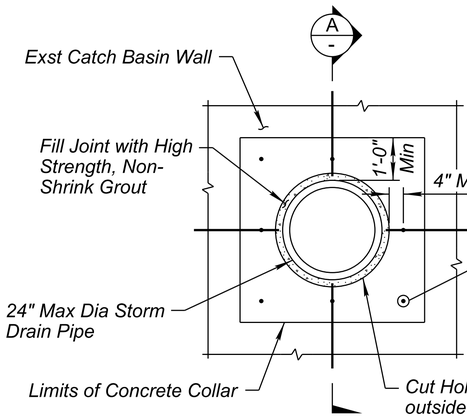

PIPE PENETRATION

Scale: 3/4" = 1'-0"

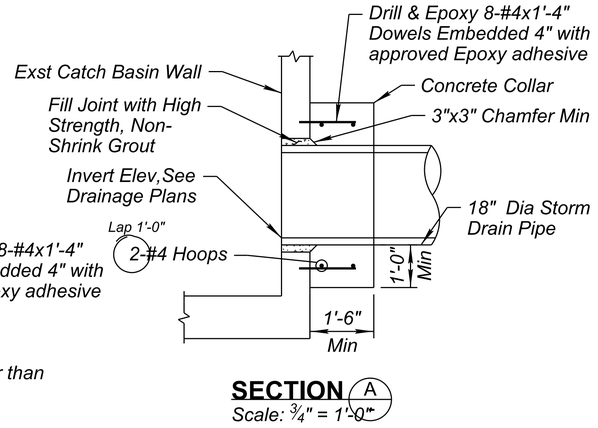

SECTION A

Scale: 3/4" = 1'-0"

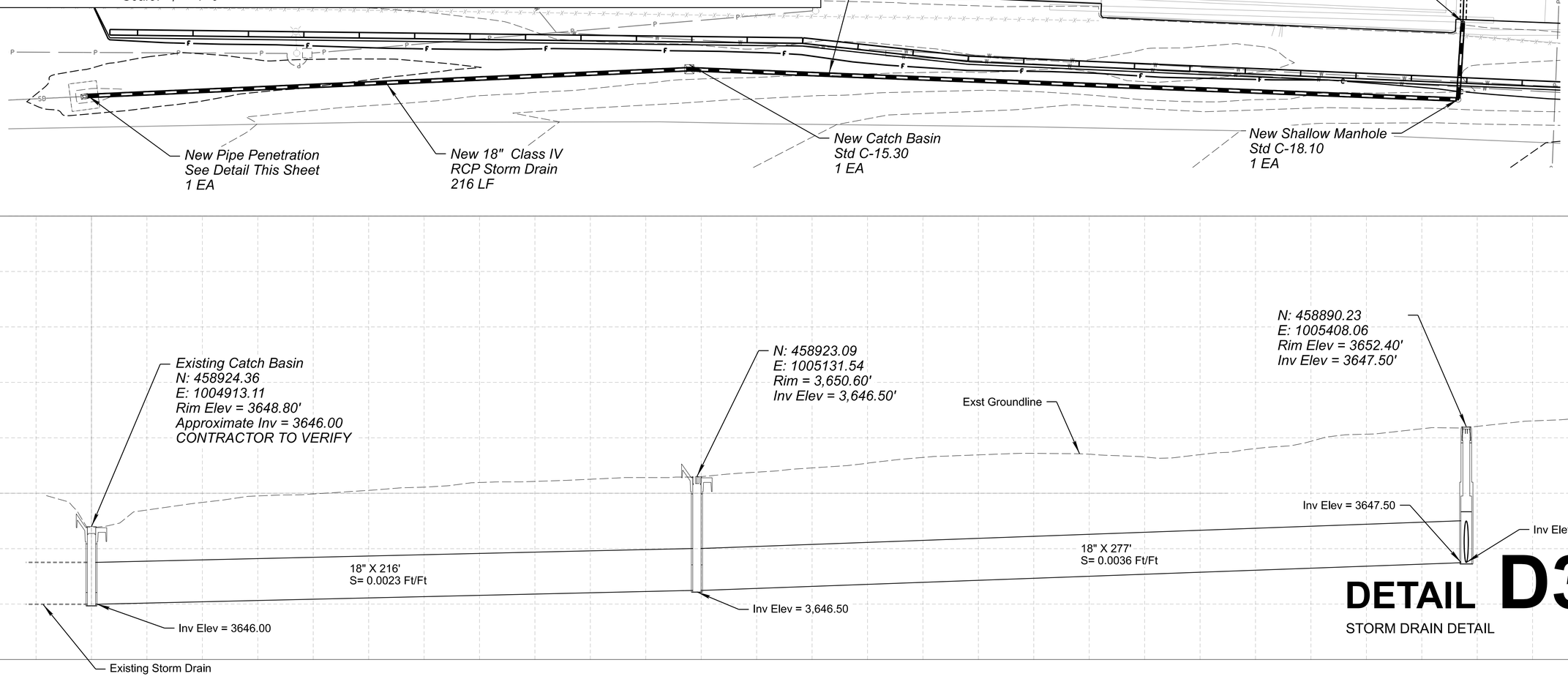

DETAIL D3

STORM DRAIN DETAIL

Registered Professional Engineer (Civil) CERTIFICATE NO. 85387 ROBERT ROBINSON Date Signed 08/14/26 ARIZONA, USA

	NAME	DATE
DESIGN	RJR	08/26
DRAWN	TJB	08/26
CHECKED	ARH	08/26

Kimley»Horn

© 2026 KIMLEY-HORN AND ASSOCIATES, INC.

ARIZONA DEPARTMENT OF TRANSPORTATION
PROJECT DELIVERY AND OPERATIONS DIVISION
PROJECT MANAGEMENT GROUP

DETAIL D3
STORM DRAIN DETAIL

ROUTE I-10
MILEPOST
STRUCTURE NO.

F.H.W.A. Arizona Division

STATE	PROJECT NO.	FEDERAL ID NO.	SHEET NO.	TOTAL SHEETS	RECORD DRAWING
ARIZ.	010 CH 383	010-F(238)T	12	200	

LOCATION SAN SIMON PORT OF ENTRY (POE)

TRACS NO. F0728 01C

DWG NO. G-04.06

___ OF___

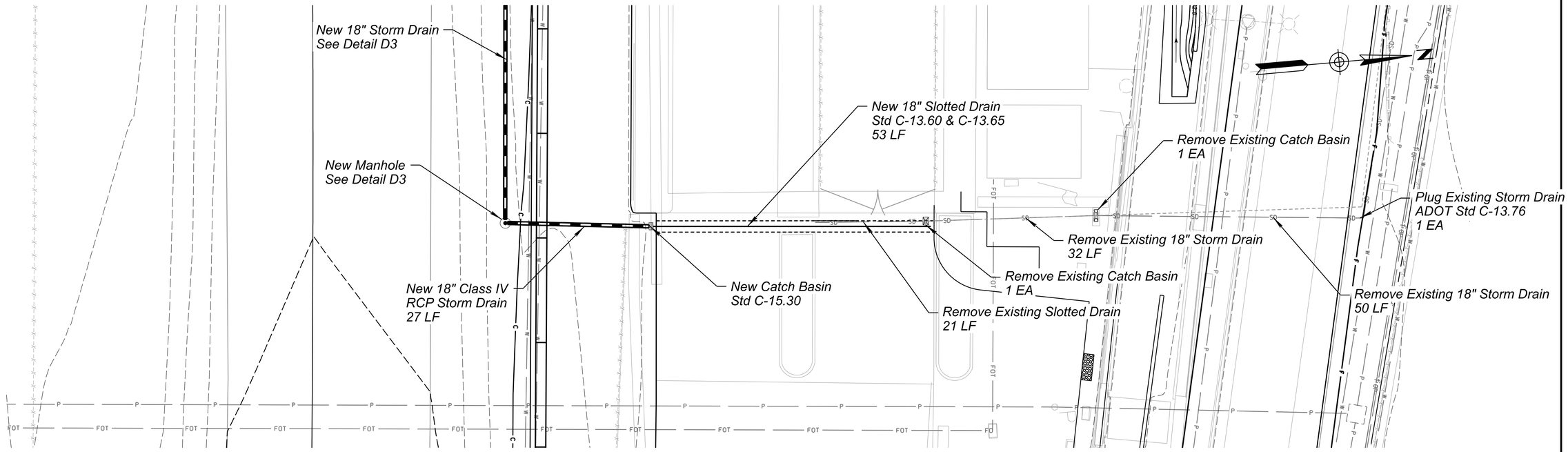

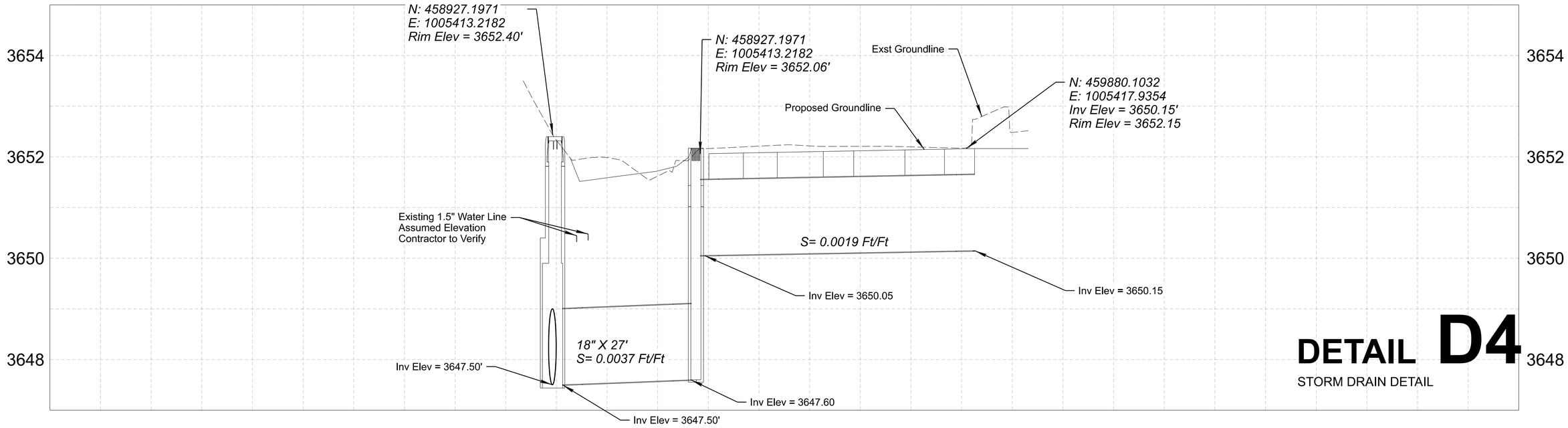

DETAIL D4

STORM DRAIN DETAIL

Registered Professional Engineer (Civil)
CERTIFICATE NO.
85387
ROBERT
ROBINSON
Date Signed 08/14/26
ARIZONA, U.S.A.

	NAME	DATE
DESIGN	RJR	08/26
DRAWN	TJB	08/26
CHECKED	RJR	08/26

Kimley»Horn

© 2026 KIMLEY-HORN AND ASSOCIATES, INC.

ARIZONA DEPARTMENT OF TRANSPORTATION
PROJECT DELIVERY AND OPERATIONS DIVISION
PROJECT MANAGEMENT GROUP

DETAIL D4
STORM DRAIN DETAIL

ROUTE I-10
MILEPOST
STRUCTURE NO.

F.H.W.A. Arizona Division

STATE	PROJECT NO.	FEDERAL ID NO.	SHEET NO.	TOTAL SHEETS	RECORD DRAWING
ARIZ.	010 CH 383	010-F(238)T	13	200	

LOCATION SAN SIMON PORT OF ENTRY (POE)

TRACS NO. F0728 01C

DWG NO. G-04.07

___ OF ___

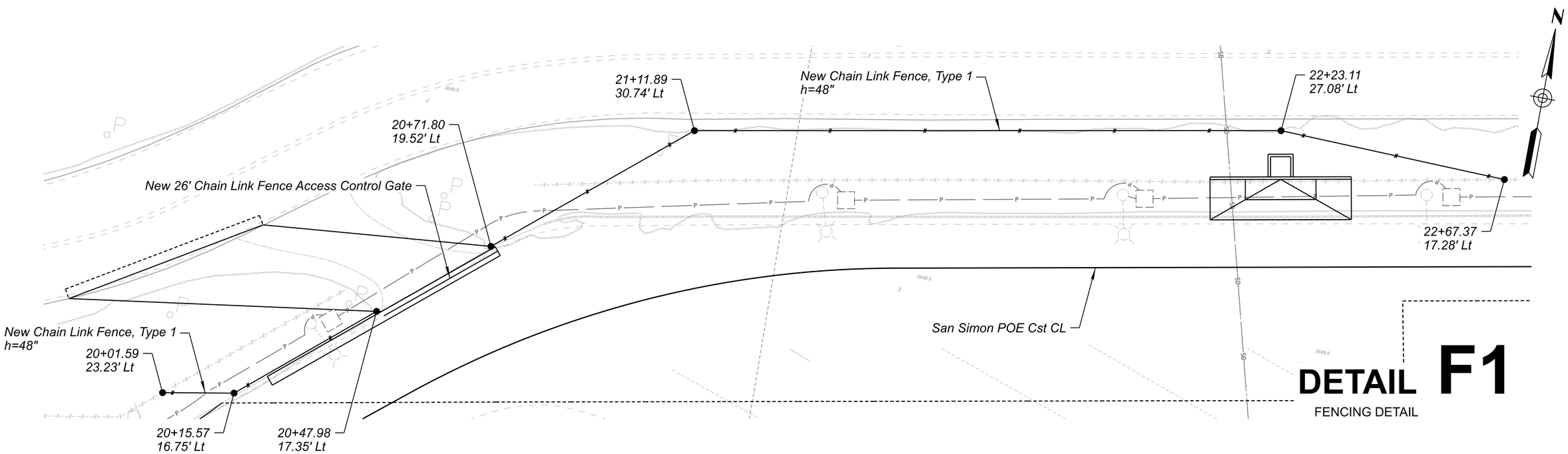

DETAIL F1

FENCING DETAIL

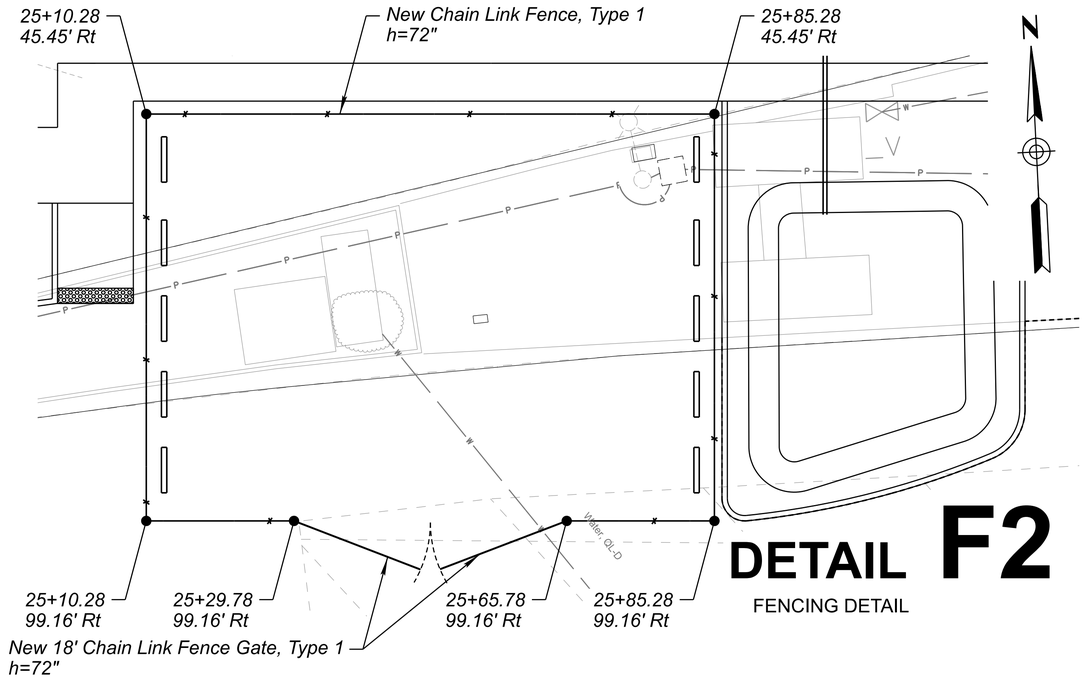

DETAIL F2

FENCING DETAIL

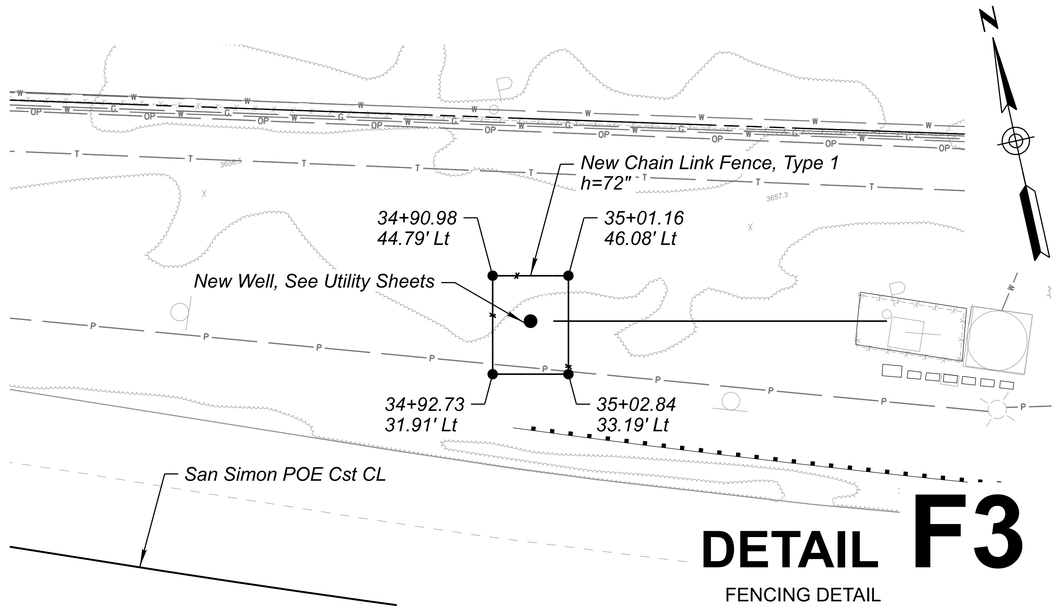

DETAIL F3

FENCING DETAIL

	NAME	DATE
DESIGN	TJB	08/26
DRAWN	TJB	08/26
CHECKED	ARH	08/26

Registered Professional Engineer (Civil) CERTIFICATE NO. 47513 ALLEN R. HATHCOCK Date Signed 08/26/26 Arizona U.S.A.

Kimley»Horn

© 2026 KIMLEY-HORN AND ASSOCIATES, INC.

ARIZONA DEPARTMENT OF TRANSPORTATION
PROJECT DELIVERY AND OPERATIONS DIVISION
PROJECT MANAGEMENT GROUP

DETAILS F1 - F3
FENCING

ROUTE I-10
MILEPOST
STRUCTURE NO.

F.H.W.A. Arizona Division	STATE	PROJECT NO.	FEDERAL ID NO.	SHEET NO.	TOTAL SHEETS	RECORD DRAWING
	ARIZ.	010 CH 383	010-F(238)T	14	200	

LOCATION SAN SIMON PORT OF ENTRY (POE)

TRACS NO. F0728 01C

DWG NO. G-04.08

___ OF ___

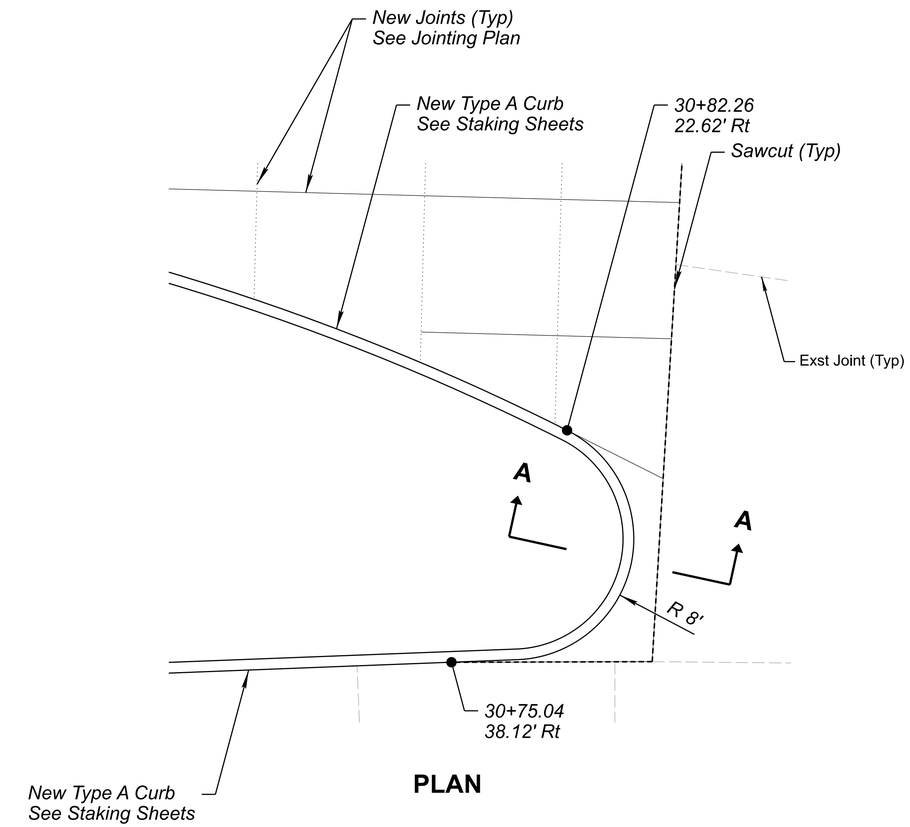

PLAN

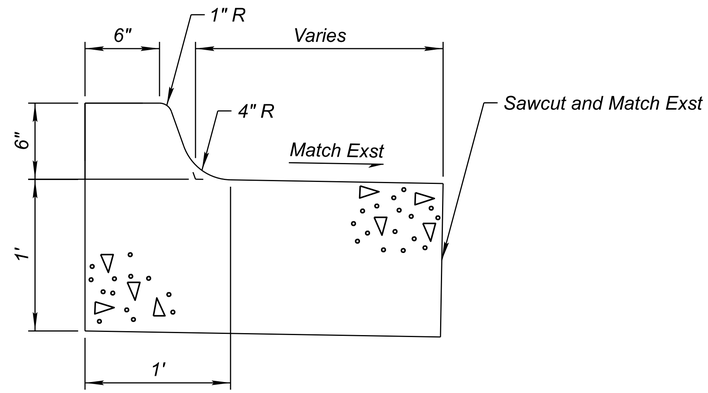

SECTION A-A

DETAIL G1

CUSTOM CURB TRANSITION

	NAME	DATE
DESIGN	TJB	08/26
DRAWN	TJB	08/26
CHECKED	ARH	08/26

Kimley»Horn

© 2026 KIMLEY-HORN AND ASSOCIATES, INC.

Registered Professional Engineer (Civil) CERTIFICATE NO. 47513 ALLEN R. HATHCOCK Date Signed 08/14/26 Arizona, U.S.A.

ARIZONA DEPARTMENT OF TRANSPORTATION
PROJECT DELIVERY AND OPERATIONS DIVISION
PROJECT MANAGEMENT GROUP

DETAIL G1
CUSTOM CURB TRANSITION

ROUTE I-10
MILEPOST
STRUCTURE NO.

F.H.W.A. Arizona Division	STATE	PROJECT NO.	FEDERAL ID NO.	SHEET NO.	TOTAL SHEETS	RECORD DRAWING
	ARIZ.	010 CH 383	010-F(238)T	15	200	

LOCATION SAN SIMON PORT OF ENTRY (POE)

DWG NO. G-04.09

TRACS NO. F0728 01C

____ OF____

8:09:18 AM 8/14/2026 TJ.Bulhoes K:\PHX_Roadway\Worksets\ADOT_PROJECTS_2022R3_10.12_291728040-F0728-SAN SIMON POE\dgn\Roadway\f0728_dtg01_sansimon.dgn

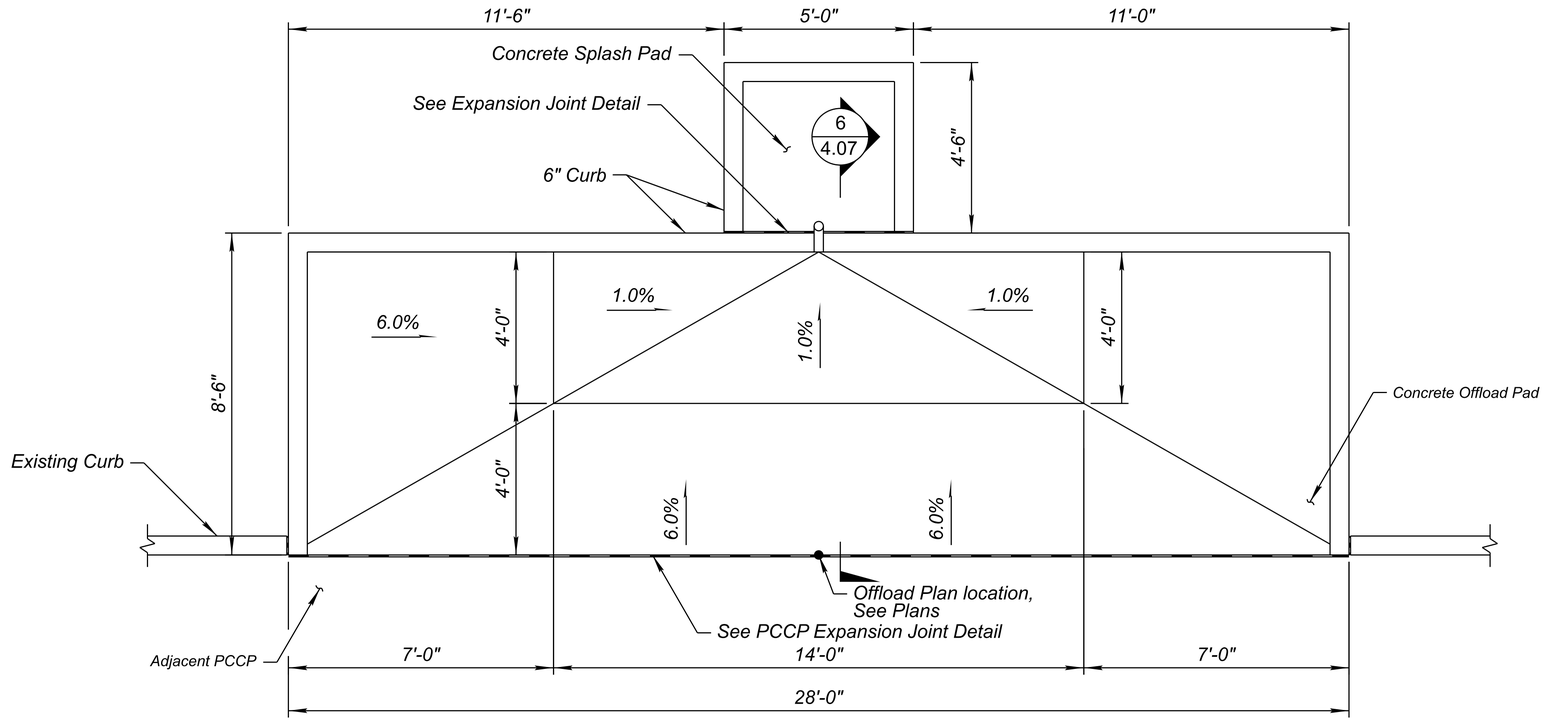

CONCRETE BASIN - PLAN (1 / -)

Scale: ½" = 1'-0"

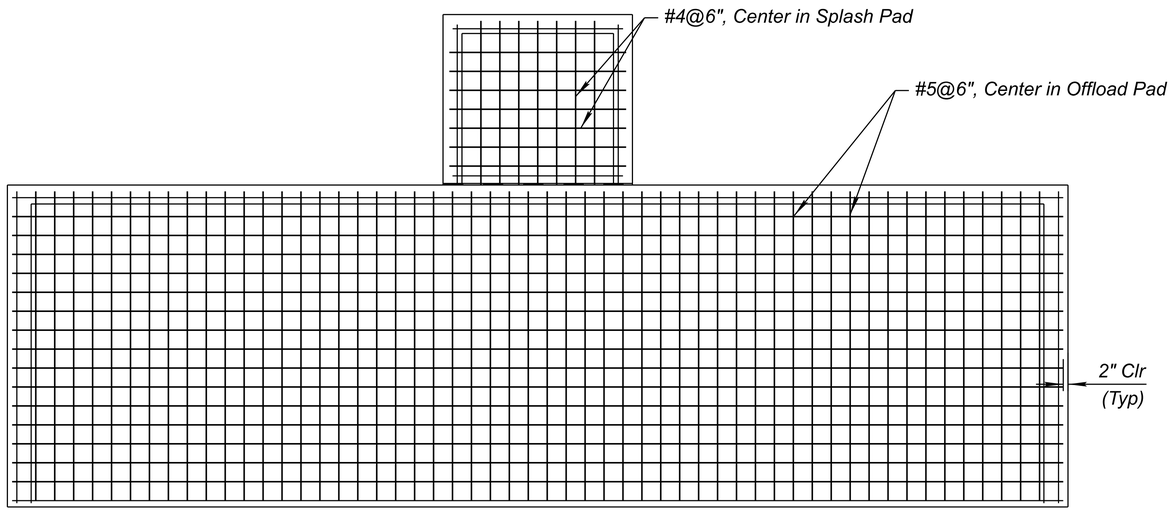

CONCRETE BASIN REINFORCEMENT PLAN (2 / -)

Scale: ½" = 1'-0"

GENERAL NOTES:

Construction Specification - Arizona Department of Transportation Standard Specifications for Road and Bridge Construction, Latest Edition.

All concrete shall be Class S (f'c = 3,500 psi).

Reinforcing steel shall conform to ASTM Specification A615. All reinforcing shall be furnished as Grade 60.

All bend and hooks shall meet the requirements of AASHTO LRFD Article 5.10. All bend dimensions for reinforcing steel shall be out-to-out of bars.

All placement dimensions for reinforcing steel shall be center of bars unless noted otherwise.

All reinforcing steel shall have 2 inch clear cover unless noted otherwise.

Chamfer all exposed corners ¾" unless noted otherwise.

Compact structure backfill for pad base minimum 100 percent of ASTM D698 maximum dry density.

Dimensions shall not be scaled from drawings.

Steel pipes shall conform to Type 316 stainless steel per ASTM A312.

Clamp and lockable ball valve shall be Type 316 stainless steel.

Fuel-resistant sealant around dispenser shall be provided after installation.

DETAIL H1

Sheet 1 of 2

HAZARDOUS MATERIALS CONTAINMENT BASIN

Registered Professional Engineer CERTIFICATE NO. 47513 ALLEN R. HATHCOCK Date Signed 08/26/26 Arizona

	NAME	DATE
DESIGN	TJB	08/26
DRAWN	TJB	08/26
CHECKED	ARH	08/26

Kimley»Horn

© 2026 KIMLEY-HORN AND ASSOCIATES, INC.

ARIZONA DEPARTMENT OF TRANSPORTATION
PROJECT DELIVERY AND OPERATIONS DIVISION
PROJECT MANAGEMENT GROUP

DETAIL H1
HAZARDOUS MATERIALS
SPILL CONTAINMENT BASIN DETAIL

ROUTE I-10
MILEPOST
STRUCTURE NO.

F.H.W.A. Arizona Division	STATE	PROJECT NO.	FEDERAL ID NO.	SHEET NO.	TOTAL SHEETS	RECORD DRAWING
	ARIZ.	010 CH 383	010-F(238)T	16	200	

LOCATION SAN SIMON PORT OF ENTRY (POE)

DWG NO. G-04.10

TRACS NO. F0728 01C

____ OF____

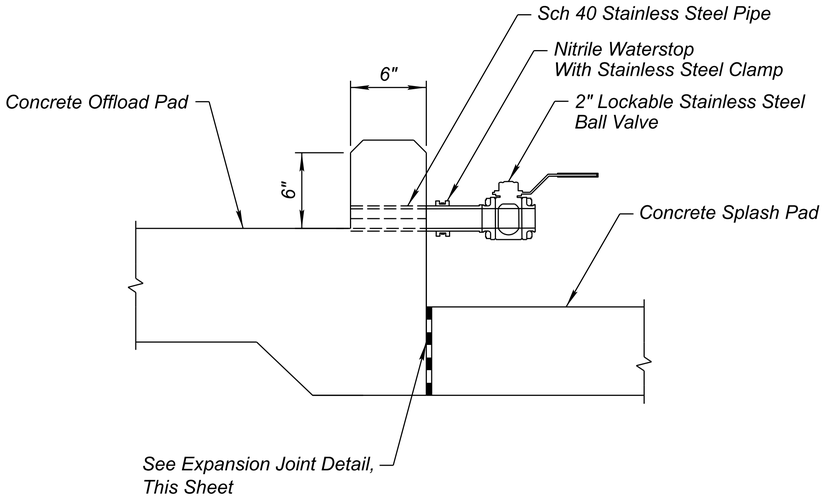

BALL DRAIN VALVE SECTION

3
-

Scale: ½" = 1'-0"

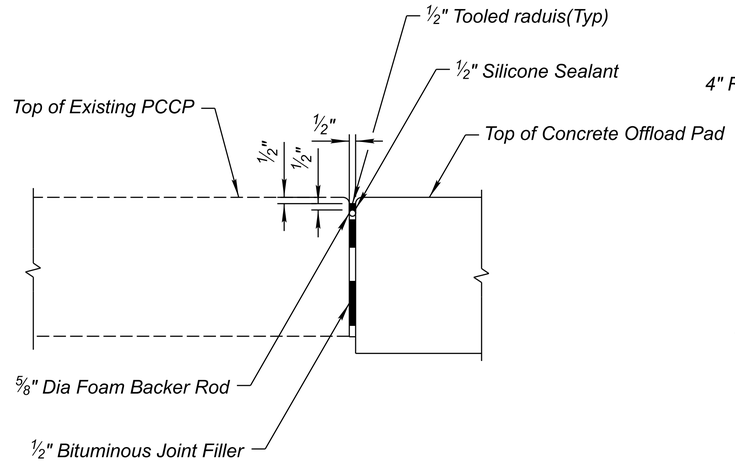

PCCP EXPANSION JOINT DETAIL

4
-

Scale: ½" = 1'-0"

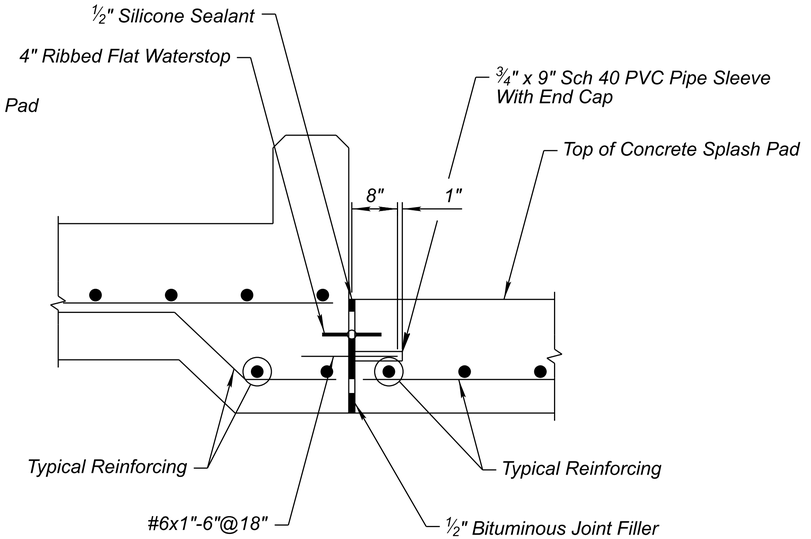

EXPANSION JOINT DETAIL

5
-

Scale: ½" = 1'-0"

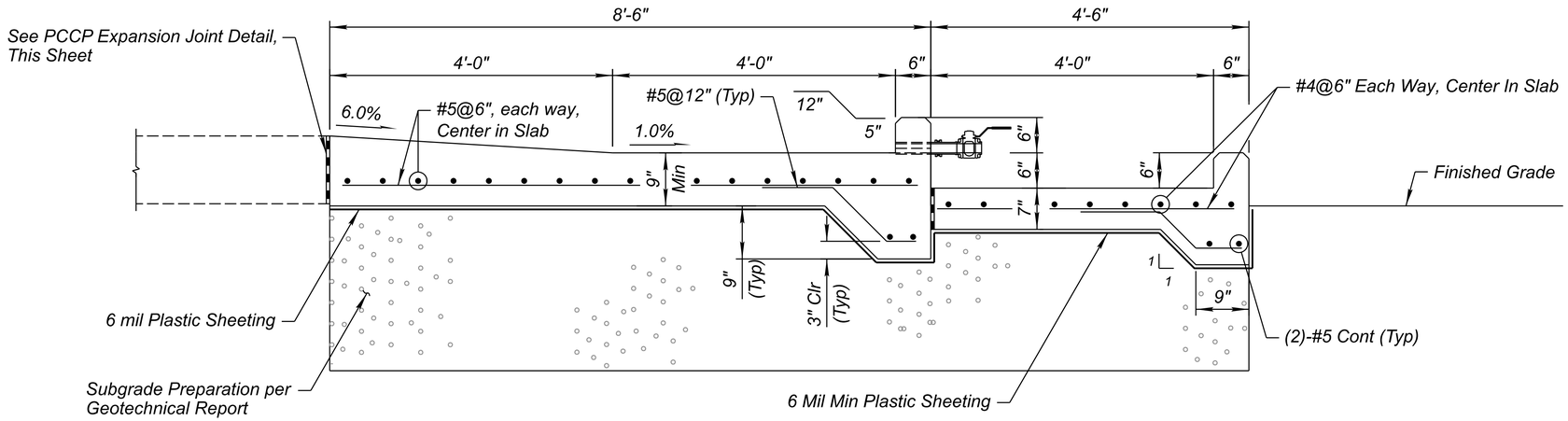

RAMP SECTION - TYPICAL CONTAINMENT AREA

6
-

Scale: 1" = 1'-0"

DETAIL H1

Sheet 2 of 2

HAZARDOUS MATERIALS CONTAINMENT BASIN

Registered Professional Engineer (Civil)
CERTIFICATE NO.
47513
ALLEN R.
HATHCOCK
Date Signed 08/26/26

	NAME	DATE
DESIGN	TJB	08/26
DRAWN	TJB	08/26
CHECKED	ARH	08/26

Kimley»Horn

© 2026 KIMLEY-HORN AND ASSOCIATES, INC.

ARIZONA DEPARTMENT OF TRANSPORTATION
PROJECT DELIVERY AND OPERATIONS DIVISION
PROJECT MANAGEMENT GROUP

DETAIL H1
HAZARDOUS MATERIALS
SPILL CONTAINMENT BASIN DETAIL

ROUTE I-10
MILEPOST
STRUCTURE NO.

F.H.W.A. Arizona Division

STATE	PROJECT NO.	FEDERAL ID NO.	SHEET NO.	TOTAL SHEETS	RECORD DRAWING
ARIZ.	010 CH 383	010-F(238)T	17	200	

LOCATION SAN SIMON PORT OF ENTRY (POE)

DWG NO. G-04.11

TRACS NO. F0728 01C

____ OF____

8:09:34 AM 8/14/2026 TJ.Bulhoes K:\PHX_Roadway\Worksets\ADOT_PROJECTS_2022R3_10.12_291728040-F0728-SAN SIMON POE\dgn\Roadway\f0728_dth02_sansimon.dgn

PRIMARY CONTROL POINTS				
Point	Ground (E)	Ground (N)	Elevation	Description
100	1,001,061.29	459,329.86	3622.77'	RB 1/2" CP 100
101	1,007,180.60	458,622.31	3668.64'	RB 1/2" BP

SECONDARY CONTROL POINTS				
Point	Ground (E)	Ground (N)	Elevation	Description
99	1,004,999.65	459,141.23	3649.65'	RB 1/2" BP
90675	1,005,048.08	459,170.89	3648.42'	BCSM - 3.5"
91137	1,005,413.33	459,001.18	3652.47'	BCSM

GENERAL NOTES

This survey control utilizes the established I-10 control.

The following parameters were set for the basis of this survey:

System: United States State Plane 1983
Zone: Arizona East
Datum: North American 1983 (CONUS) modified 1992

Units = International Feet
(1 Feet = 0.3048 Meters exactly)

Direct satellite measurements were made on each point in the geocentric coordinate system of WGS 84 and automatic translations were made to the North American Datum of 1983 and to the ground scaled version of the State Plane grid system.

A ground adjustment factor of 1.00016 was provided by Darling Eng. and used by Darling Eng. Field Survey for this project.

Basis of Bearings:

Darling Engineering survey crew furnished the coordinates for this project. The coordinates were based on NAD83/92 Horizontal and NAVD88 Vertical Datum with a GAF of 1.00016. Established By Static GPS Oberservations of 2 Set 1/2" Rebar Said Bearing Being: S89°24'16" East.

Basis of Alignments and Stations:

Best Fit Alignments for WB and EB centerlines for Interstate I-10, from Record Drawings.

All bearings are grid bearings. Distances are ground distances and coordinates are ground coordinates.

Monument verification and acceptance: The monumentation shown on these plans were based on an observation and evaluation of physical corroborating evidence in the field; and a review of existing drawings and notes readily available at the time the survey was prepared.

Registered Professional Engineer (Civil) CERTIFICATE NO. 47513 ALLEN R. HATHCOCK State of Arizona Date Signed 08/26/26

	NAME	DATE
DESIGN	TJB	08/26
DRAWN	TJB	08/26
CHECKED	ARH	08/26

Kimley»Horn

© 2026 KIMLEY-HORN AND ASSOCIATES, INC.

ARIZONA DEPARTMENT OF TRANSPORTATION
PROJECT DELIVERY AND OPERATIONS DIVISION
PROJECT MANAGEMENT GROUP

SAN SIMON PORT OF ENTRY (POE)
SURVEY CONTROL

ROUTE I-10
MILEPOST
STRUCTURE NO.

F.H.W.A. Arizona Division	STATE	PROJECT NO.	FEDERAL ID NO.	SHEET NO.	TOTAL SHEETS	RECORD DRAWING
	ARIZ.	010 CH 383	010-F(238)T	18	200	

LOCATION SAN SIMON PORT OF ENTRY (POE)

TRACS NO. F0728 01C

DWG NO. G-05.01

___ OF ___

8:09:41 AM 8/14/2026 TJ.Bulhoes K:\PHX_Roadway\Worksets\ADOT_PROJECTS_2022R3_10.12_291728040-F0728-SAN SIMON POE\dgn\Roadway\f0728_gc01_sansimon.dgn

PLAN REF NO.	DESCRIPTION	POINT TYPE	STATION	COORDINATES		SPIRAL TOTAL					SPIRAL MAIN OR CIRCULAR							SPIRAL CURVE			
				Northing	Easting	Total Delta	T	L	R+o	Ext	Δ	D	R	L	T	Ext	Super	Δ	L	o	t
100	*Exst I-10 WB Cst CL*	*POB*	*4301+00.00*	*458805.633*	*999517.766*																
101	*Exst I-10 WB Cst CL*	*PC*	*4351+59.26*	*458892.969*	*1004576.273*																
102	*Exst I-10 WB Cst CL*	*PI*	*4362+17.03*	*458911.229*	*1005633.880*						*15°39'25" Rt*	*00°44'41"*	*7693.44*	*2102.35*	*1057.77*	*72.38*	*Match Exst*				
103	*Exst I-10 WB Cst CL - Bk*	*PT*	*4372+61.61*	*458643.387*	*1006657.173*																
103	*Exst I-10 WB Cst CL - Ah*	*PT*	*4369+66.28*	*458643.387*	*1006657.173*																
104	*Exst I-10 WB Cst CL*	*POE*	*4390+00.00*	*458128.420*	*1008624.615*																
200	*Exst I-10 EB Cst CL*	*POB*	*4301+00.00*	*458697.649*	*999519.631*																
201	*Exst I-10 EB Cst CL*	*PC*	*4351+59.26*	*458784.985*	*1004578.137*																
202	*Exst I-10 EB Cst CL*	*PI*	*4362+07.15*	*458803.075*	*1005625.874*						*15°43'51" Rt*	*00°45'19"*	*7585.44*	*2082.60*	*1047.89*	*72.04*	*Match Exst*				
203	*Exst I-10 EB Cst CL - Bk*	*PT*	*4372+41.86*	*458536.428*	*1006639.273*																
203	*Exst I-10 EB Cst CL - Ah*	*PT*	*4369+66.28*	*458536.428*	*1006639.273*																
204	*Exst I-10 EB Cst CL*	*POE*	*4389+90.09*	*458021.449*	*1008596.468*																
300	*San Simon POE Cst CL*	*POB*	*10+00.00*	*458899.171*	*1003534.704*																
301	*San Simon POE Cst CL*	*PC*	*18+87.36*	*458938.094*	*1004421.212*																
302	*San Simon POE Cst CL*	*PI*	*19+53.64*	*458941.002*	*1004487.429*						*36°47'33" Lt*	*28°45'00"*	*199.29*	*127.97*	*66.28*	*10.73*	*Match Exst*				
303	*San Simon POE Cst CL*	*PT*	*20+15.34*	*458982.988*	*1004538.715*																
304	*San Simon POE Cst CL*	*PC*	*20+35.90*	*458996.017*	*1004554.629*																
305	*San Simon POE Cst CL*	*PI*	*20+86.81*	*459028.262*	*1004594.015*						*28°39'20" Rt*	*28°45'00"*	*199.29*	*99.67*	*50.90*	*6.40*	*Match Exst*				
306	*San Simon POE Cst CL*	*PT*	*21+35.58*	*459037.670*	*1004644.039*																
307	*San Simon POE Cst CL*	*PC*	*22+79.97*	*459064.358*	*1004785.947*																
308	*San Simon POE Cst CL*	*PI*	*23+28.98*	*459073.417*	*1004834.112*						*13°58'46" Rt*	*14°20'00"*	*399.74*	*97.53*	*49.01*	*2.99*	*Match Exst*				
309	*San Simon POE Cst CL*	*PT*	*23+77.50*	*459070.571*	*1004883.038*																
310	*San Simon POE Cst CL*	*PC*	*28+24.98*	*459044.592*	*1005329.759*																
311	*San Simon POE Cst CL*	*PI*	*28+59.36*	*459042.596*	*1005364.086*						*07°53'46" Rt*	*11°30'00"*	*498.22*	*68.66*	*34.39*	*1.19*	*Match Exst*				
312	*San Simon POE Cst CL*	*PT*	*28+93.64*	*459035.903*	*1005397.814*																
313	*San Simon POE Cst CL*	*PC*	*30+45.12*	*459006.417*	*1005546.400*																
314	*San Simon POE Cst CL*	*PI*	*31+54.10*	*458985.204*	*1005653.295*						*10°19'30" Rt*	*04°45'00"*	*1206.23*	*217.37*	*108.98*	*4.91*	*Match Exst*				
315	*San Simon POE Cst CL*	*PT*	*32+62.49*	*458945.175*	*1005754.657*																
316	*San Simon POE Cst CL*	*PC*	*34+43.87*	*458878.555*	*1005923.355*																
317	*San Simon POE Cst CL*	*PI*	*35+80.91*	*458828.218*	*1006050.821*						*09°07'01" Lt*	*03°20'00"*	*1718.87*	*273.51*	*137.05*	*5.46*	*Match Exst*				
318	*San Simon POE Cst CL*	*PT*	*37+17.38*	*458798.714*	*1006184.653*																
319	*San Simon POE Cst CL*	*PC*	*40+65.39*	*458723.793*	*1006524.499*																
320	*San Simon POE Cst CL*	*PI*	*42+14.32*	*458691.729*	*1006669.944*						*02°14'08" Rt*	*00°45'02"*	*7633.44*	*297.84*	*148.94*	*1.45*	*Match Exst*				
321	*San Simon POE Cst CL*	*PT*	*43+63.22*	*458654.016*	*1006814.027*																
322	*San Simon POE Cst CL*	*POE*	*62+47.89*	*458176.790*	*1008637.276*																

Registered Professional Engineer
CERTIFICATE NO.
47513
ALLEN R. HATHCOCK
Date Signed 08/26/26
Civil

	NAME	DATE
DESIGN	TJB	08/26
DRAWN	TJB	08/26
CHECKED	ARH	08/26

Kimley»Horn

© 2026 KIMLEY-HORN AND ASSOCIATES, INC.

ARIZONA DEPARTMENT OF TRANSPORTATION
PROJECT DELIVERY AND OPERATIONS DIVISION
PROJECT MANAGEMENT GROUP

GEOMETRIC DATA SHEET

ROUTE I-10
MILEPOST
STRUCTURE NO.

F.H.W.A. Arizona Division

STATE	PROJECT NO.	FEDERAL ID NO.	SHEET NO.	TOTAL SHEETS	RECORD DRAWING
ARIZ.	010 CH 383	010-F(238)T	19	200	

LOCATION SAN SIMON PORT OF ENTRY (POE)

DWG NO. G-06.01

TRACS NO. F0728 01C

___ OF ___

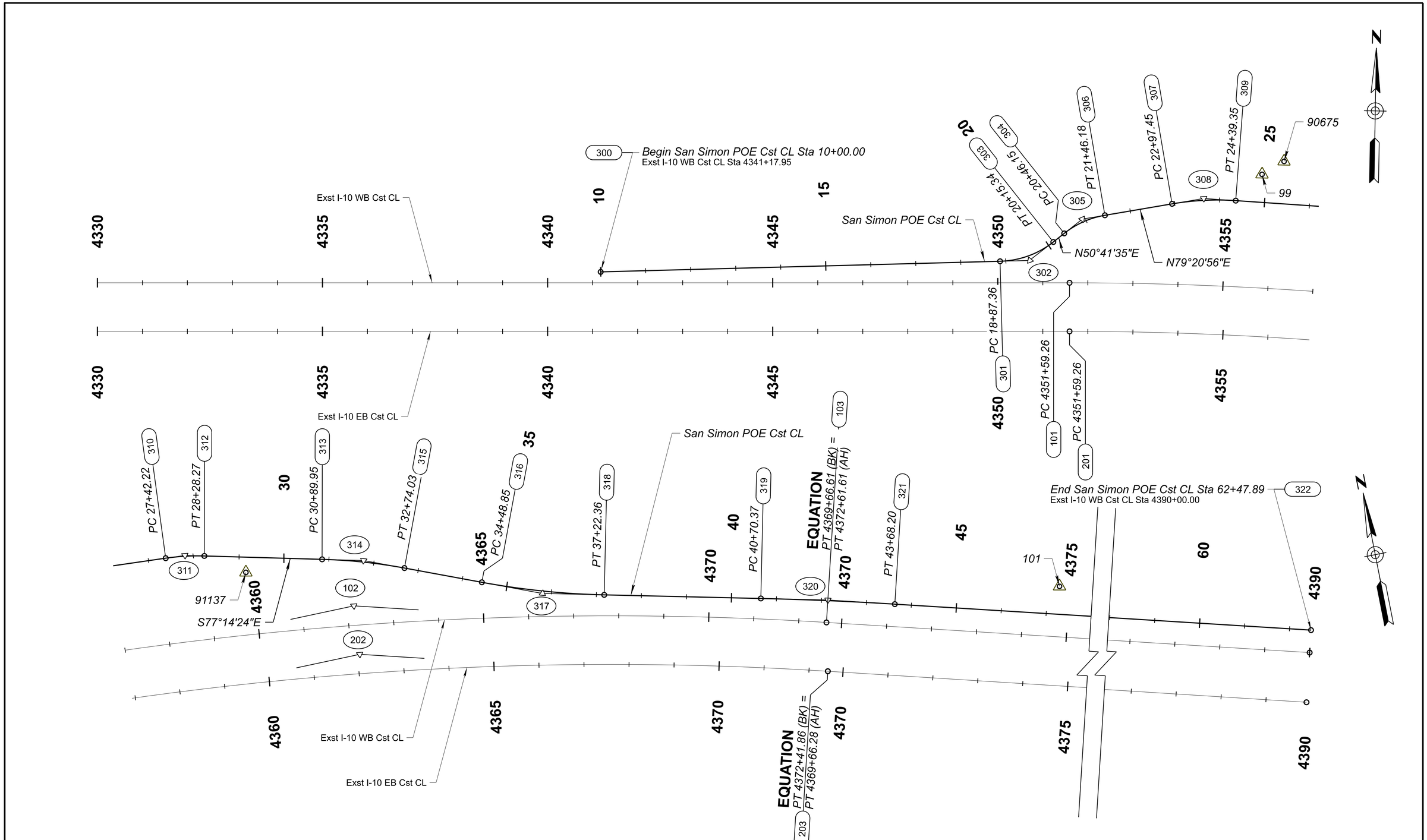

	NAME	DATE
DESIGN	TJB	08/26
DRAWN	TJB	08/26
CHECKED	RRG	08/26

Kimley»Horn

© 2026 KIMLEY-HORN AND ASSOCIATES, INC.

ARIZONA DEPARTMENT OF TRANSPORTATION
PROJECT DELIVERY AND OPERATIONS DIVISION
PROJECT MANAGEMENT GROUP

GEOMETRIC LAYOUT SHEET
Sta 4330+00 to 4390+00

ROUTE: I-10
MILEPOST:
STRUCTURE NO.:

F.H.W.A. Arizona Division

STATE	PROJECT NO.	FEDERAL ID NO.	SHEET NO.	TOTAL SHEETS	RECORD DRAWING
ARIZ.	010 CH 383	010-F(238)T	20	200	

LOCATION: SAN SIMON PORT OF ENTRY (POE)

DWG NO. G-06.02

TRACS NO. F0728 01C

___ OF ___

8:09:56 AM 8/14/2026 TJ.Bulhoes K:\PHX_Roadway\Worksets\ADOT_PROJECTS_2022R3_10.12_291728040-F0728-SAN SIMON POE\dgn\Roadway\f0728_g01_sansimon.dgn

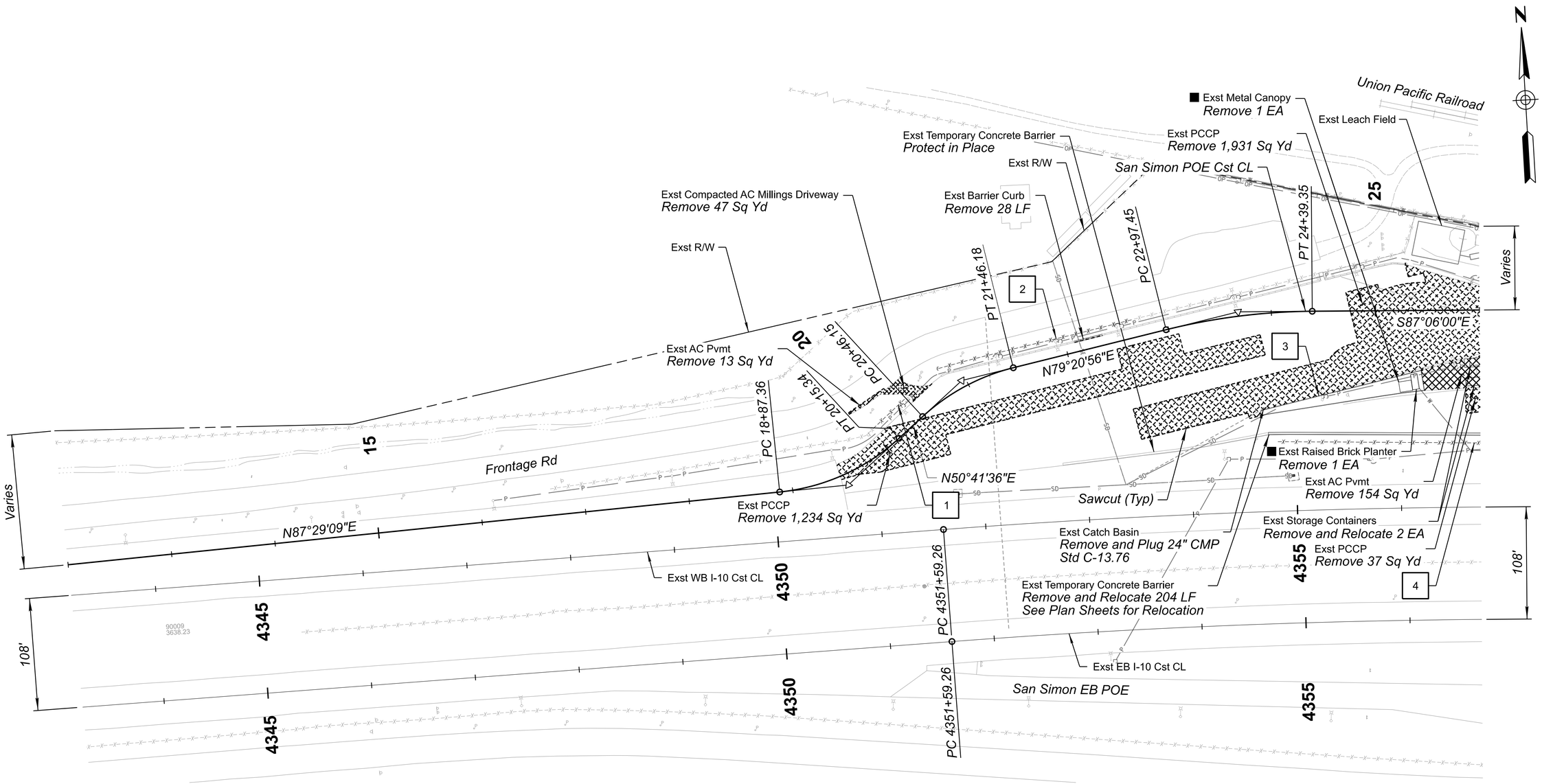

NOTES:
1. See Roadway Summary Sheets, Dwg No. G-03 Series
2. For pavement removal limits, see Staking Sheets, Dwg No. G-07 Series

LEGEND:

ASPHALT REMOVAL *PCCP REMOVAL* *MILLINGS REMOVAL*

LEGEND:

■ *Item will be paid for under Item No. 2020050*

Registered Professional Engineer — CERTIFICATE NO. 47613 — ALLEN R. HATHCOCK — State of Arizona — Not valid without signature and seal

	NAME	DATE
DESIGN	TJB	09/26
DRAWN	TJB	09/26
CHECKED	RRG	09/26

Kimley»Horn

© 2026 KIMLEY-HORN AND ASSOCIATES, INC.

ARIZONA DEPARTMENT OF TRANSPORTATION
PROJECT DELIVERY AND OPERATIONS DIVISION
PROJECT MANAGEMENT GROUP

SAN SIMON POE
REMOVAL SHEET
Sta 12+00 to 26+00

ROUTE I-10
MILEPOST
STRUCTURE NO.

F.H.W.A. Arizona Division	STATE	PROJECT NO.	FEDERAL ID NO.	SHEET NO.	TOTAL SHEETS	RECORD DRAWING
	ARIZ.	010 CH 383	010-F(238)T	21	200	

LOCATION SAN SIMON PORT OF ENTRY (POE)

DWG NO. G-07.01

TRACS NO. F0728 01C

___ OF___

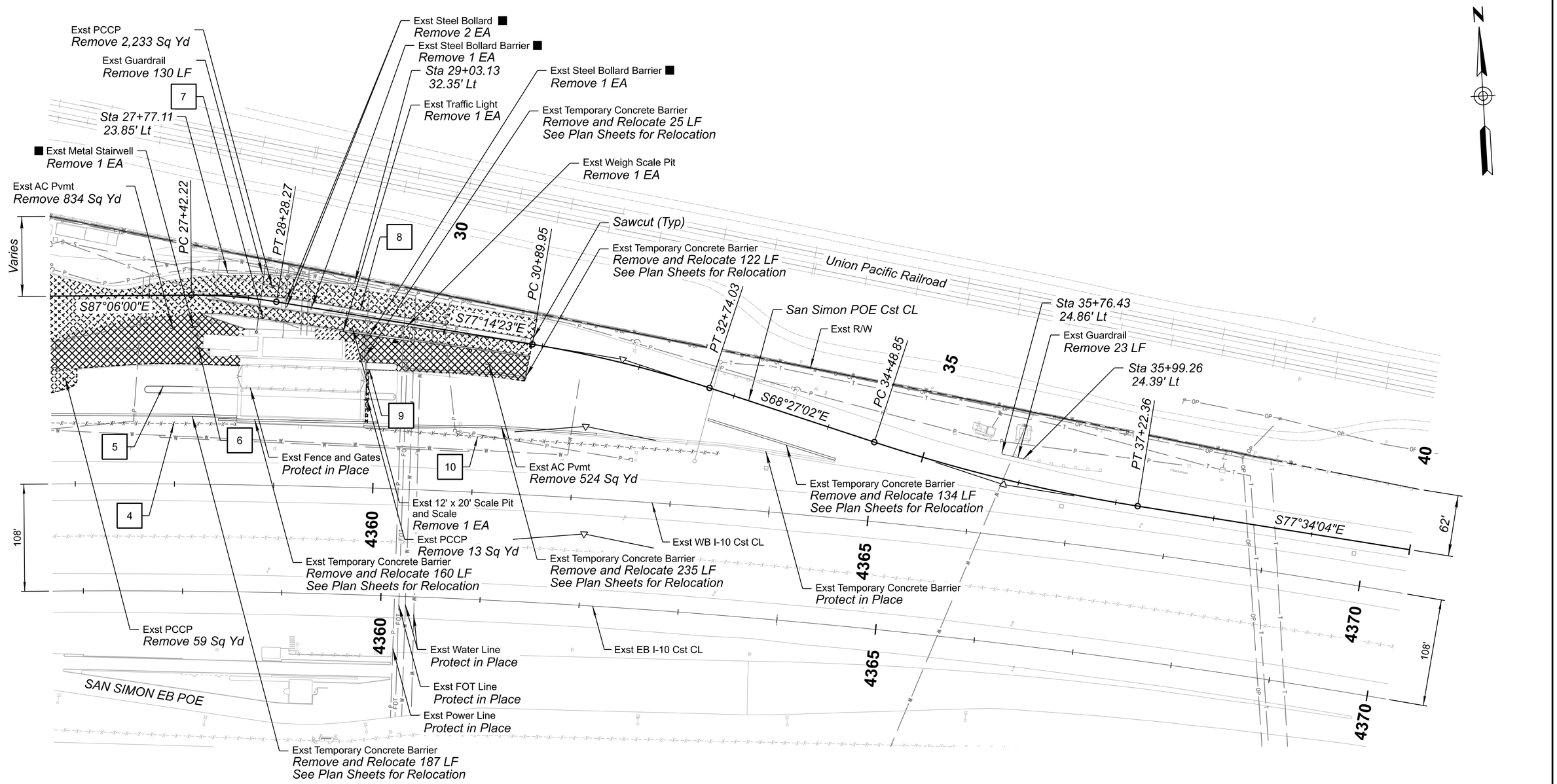

NOTES:
1. See Roadway Summary Sheets, Dwg No. G-03 Series
2. For pavement removal limits, see Staking Sheets, Dwg No. G-07 Series

LEGEND:

ASPHALT REMOVAL | PCCP REMOVAL | BUILDING REMOVAL (SEE ARCHITECTURAL PLANS)

LEGEND:

■ Item will be paid for under Item No. 2020050

	NAME	DATE
DESIGN	TJB	09/26
DRAWN	TJB	09/26
CHECKED	RRG	09/26

Registered Professional Engineer (Civil) CERTIFICATE NO. 47513 ALLEN R. HATHCOCK Date Signed 09/26/26

Kimley»Horn
© 2026 KIMLEY-HORN AND ASSOCIATES, INC.

ARIZONA DEPARTMENT OF TRANSPORTATION
PROJECT DELIVERY AND OPERATIONS DIVISION
PROJECT MANAGEMENT GROUP

SAN SIMON POE
REMOVAL SHEET
Sta 26+00 to 40+00

ROUTE I-10
MILEPOST
STRUCTURE NO.

F.H.W.A. Arizona Division	STATE	PROJECT NO.	FEDERAL ID NO.	SHEET NO.	TOTAL SHEETS	RECORD DRAWING
	ARIZ.	010 CH 383	010-F(238)T	22	200	

LOCATION SAN SIMON PORT OF ENTRY (POE)
DWG NO. G-07.02
TRACS NO. F0728 01C
___ OF___

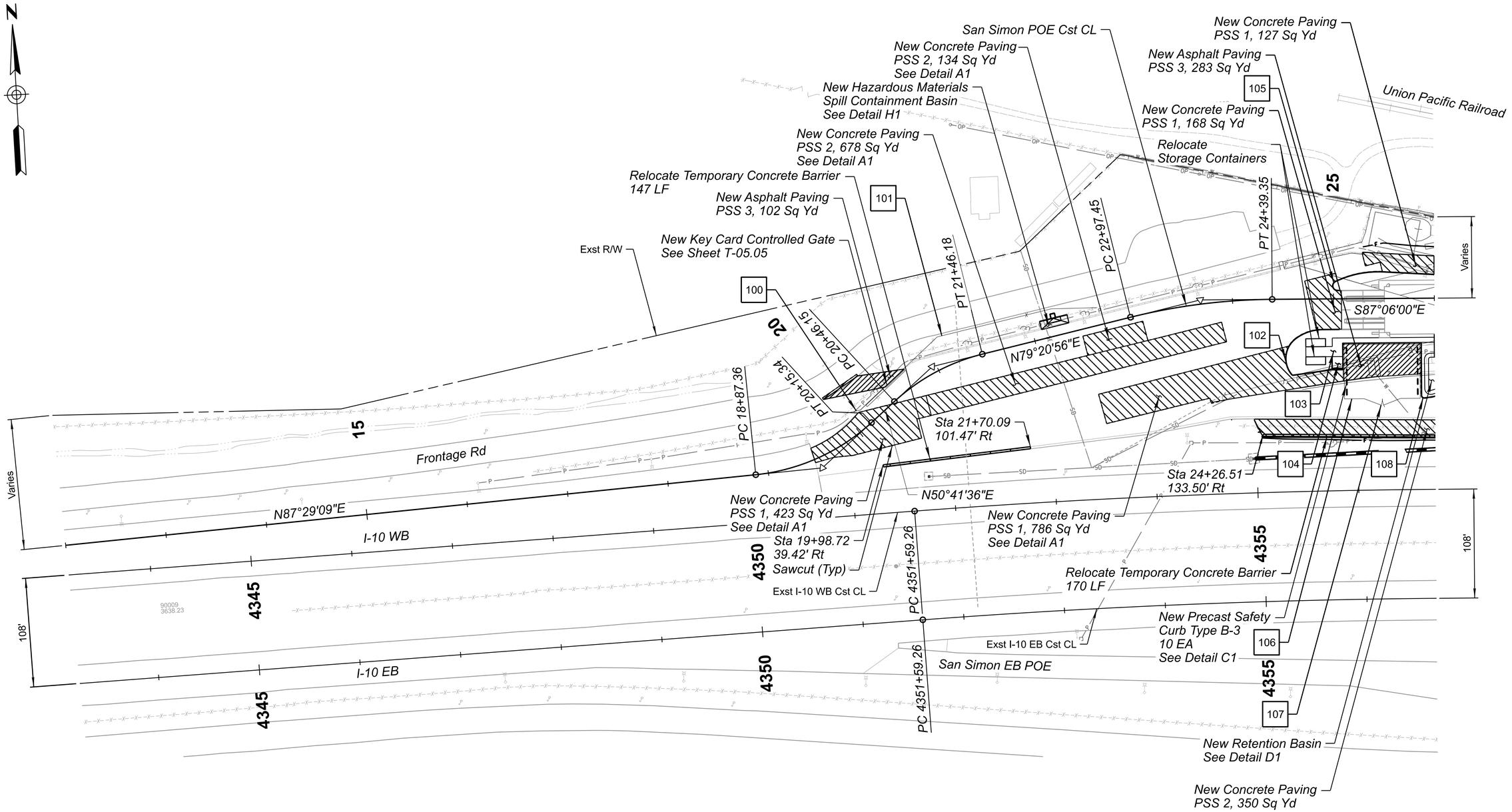

NOTES:
1. See Roadway Summary Sheets, Dwg No. G-03 Series
2. For new pavement limits, see Staking Sheets, Dwg No. G-07 Series

Registered Professional Engineer — CERTIFICATE NO. 47613 — ALLEN R. HATHCOCK — Not valid without signature and seal — Date Signed 08/26/26

	NAME	DATE
DESIGN	TJB	08/26
DRAWN	TJB	08/26
CHECKED	RRG	08/26

Kimley»Horn

© 2026 KIMLEY-HORN AND ASSOCIATES, INC.

ARIZONA DEPARTMENT OF TRANSPORTATION
PROJECT DELIVERY AND OPERATIONS DIVISION
PROJECT MANAGEMENT GROUP

SAN SIMON POE
PLAN SHEET
Sta 12+00 to 26+00

ROUTE: I-10
MILEPOST:
STRUCTURE NO.:

F.H.W.A. Arizona Division	STATE	PROJECT NO.	FEDERAL ID NO.	SHEET NO.	TOTAL SHEETS	RECORD DRAWING
	ARIZ.	010 CH 383	010-F(238)T	23	200	

LOCATION: SAN SIMON PORT OF ENTRY (POE)
DWG NO. G-08.01
TRACS NO. F0728 01C
___ OF ___

8:48:56 AM 8/20/2026 TJ.Bulhoes K:\PHX_Roadway\Worksets\ADOT_PROJECTS_2022R3_10.12_291728040-F0728-SAN SIMON POE\dgn\Roadway\f0728_pl01_sansimon.dgn

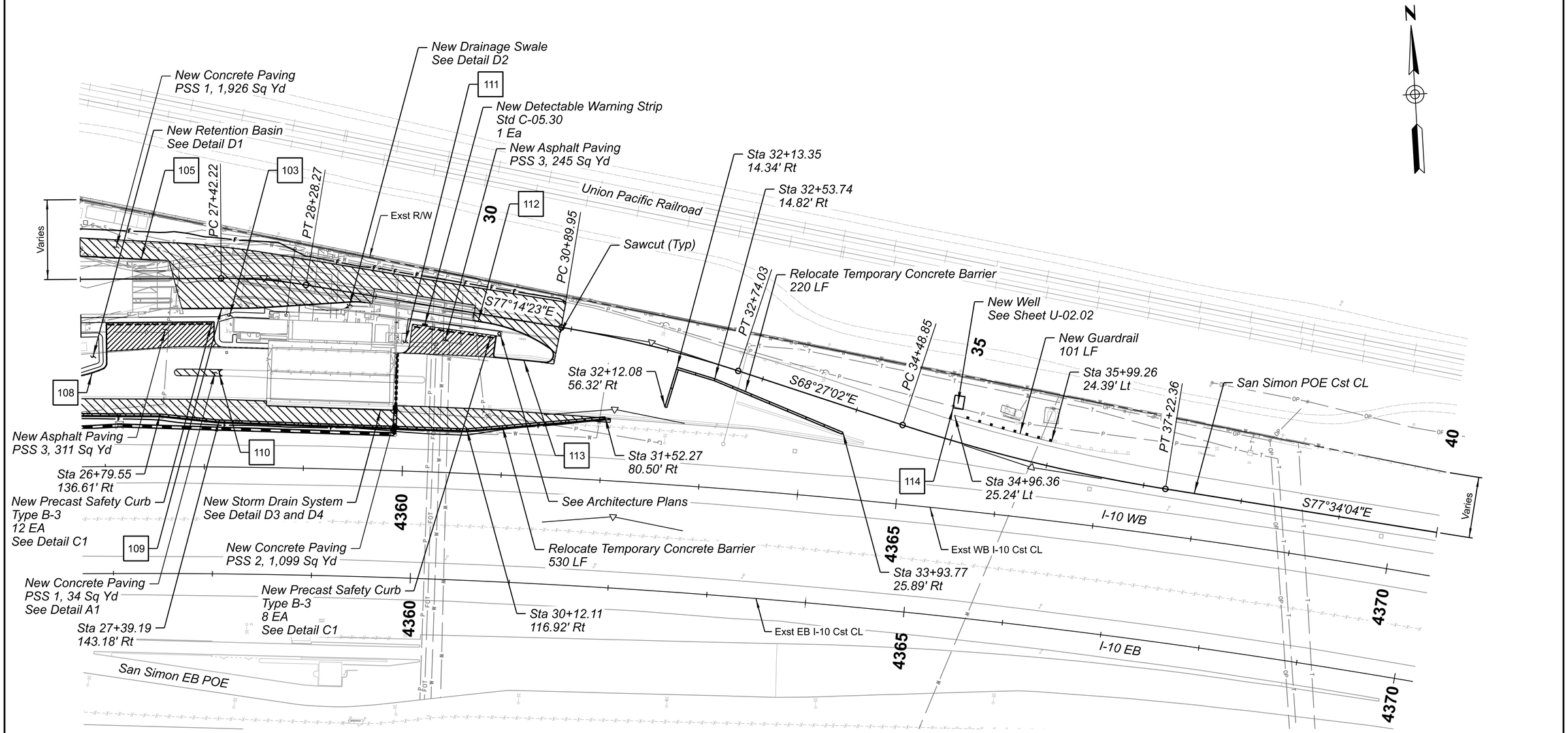

NOTES:
1. See Roadway Summary Sheets, Dwg No. G-03 Series
2. For new pavement limits, see Staking Sheets, Dwg No. G-07 Series

Registered Professional Engineer (Civil) CERTIFICATE NO. 47513 ALLEN R. HATHCOCK Date Signed 08/26/26 Arizona, U.S.A.

	NAME	DATE
DESIGN	TJB	08/26
DRAWN	TJB	08/26
CHECKED	RRG	08/26

Kimley»Horn
© 2026 KIMLEY-HORN AND ASSOCIATES, INC.

ARIZONA DEPARTMENT OF TRANSPORTATION
PROJECT DELIVERY AND OPERATIONS DIVISION
PROJECT MANAGEMENT GROUP

SAN SIMON POE
PLAN SHEET
Sta 26+00 to 40+00

ROUTE I-10
MILEPOST
STRUCTURE NO.

F.H.W.A. Arizona Division	STATE	PROJECT NO.	FEDERAL ID NO.	SHEET NO.	TOTAL SHEETS	RECORD DRAWING
	ARIZ.	010 CH 383	010-F(238)T	24	200	

LOCATION SAN SIMON PORT OF ENTRY (POE)
DWG NO. G-08.02
TRACS NO. F0728 01C
___ OF ___

8:49:20 AM 8/20/2026 TJ.Bulhoes K:\PHX_Roadway\Worksets\ADOT_PROJECTS_2022R3_10.12_291728040-F0728-SAN SIMON POE\dgn\Roadway\f0728_pl02_sansimon.dgn

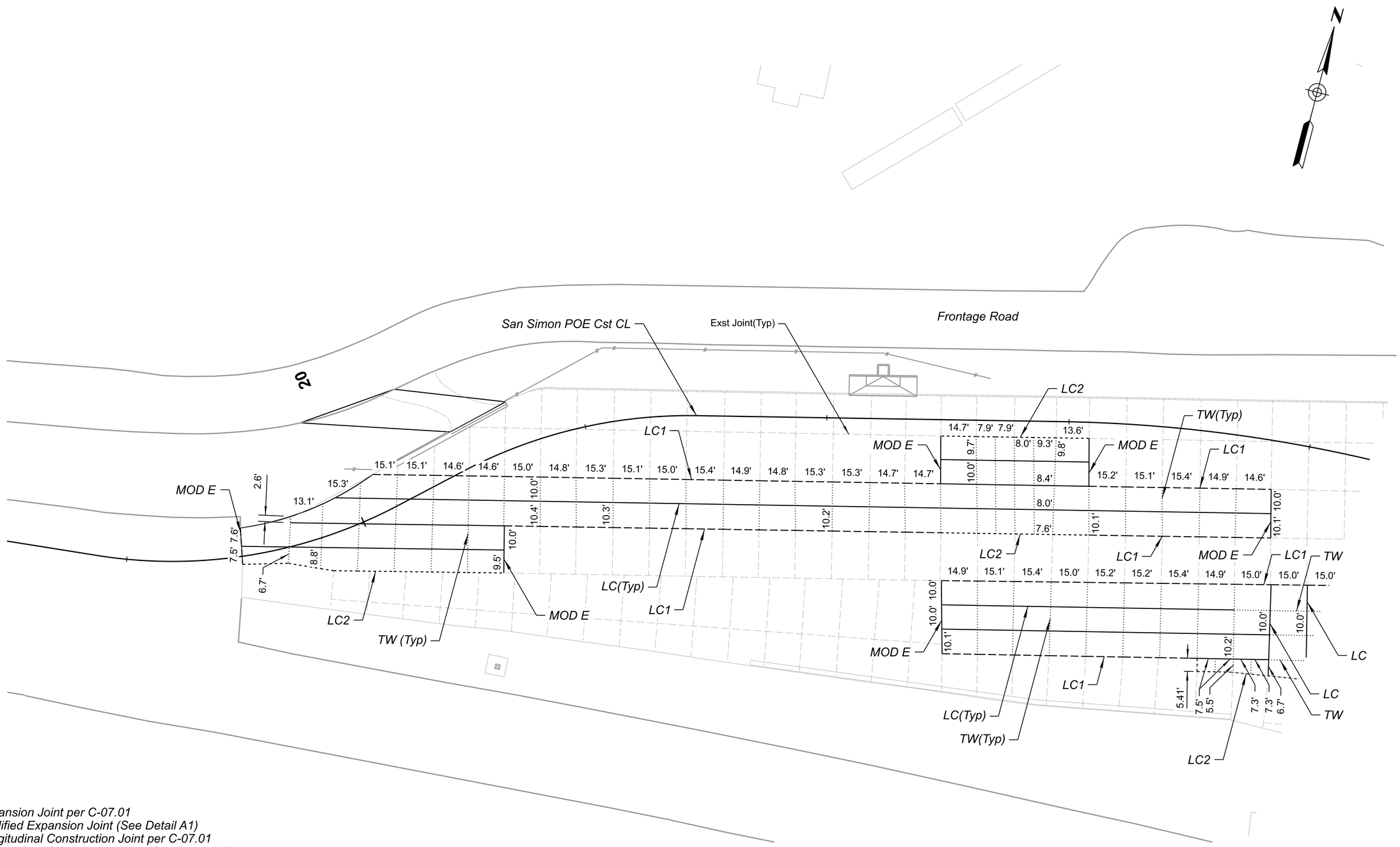

LEGEND:

E - Expansion Joint per C-07.01
MOD E - Modified Expansion Joint (See Detail A1)
LC - Longitudinal Construction Joint per C-07.01
LC1 - Longitudinal Construction Joint (See Detail A1)
LC2 - Modified Longitudinal Construction Joint (See Detail A1)
TW - Transverse Weakened Plane Joint with Load Transfer Dowel assembly C-07.02
K - K Joint per C-07.01

Registered Professional Engineer
47513
ALLEN R. HATHCOCK
CERTIFICATE NO.
Date Signed 08/26/26

	NAME	DATE
DESIGN	TJB	08/26
DRAWN	ME	08/26
CHECKED	RRG	08/26

Kimley»Horn
© 2026 KIMLEY-HORN AND ASSOCIATES, INC.

ARIZONA DEPARTMENT OF TRANSPORTATION
PROJECT DELIVERY AND OPERATIONS DIVISION
PROJECT MANAGEMENT GROUP

SAN SIMON POE
JOINTING SHEET
Sta 18+50 to 24+25

ROUTE I-10
MILEPOST
STRUCTURE NO.

F.H.W.A. Arizona Division

STATE	PROJECT NO.	FEDERAL ID NO.	SHEET NO.	TOTAL SHEETS	RECORD DRAWING
ARIZ.	010 CH 383	010-F(238)T	25	200	

LOCATION SAN SIMON PORT OF ENTRY (POE)

TRACS NO. F0728 01C

DWG NO. G-09.01

____ OF ____

8:10:37 AM 8/14/2026 TJ.Bulhoes K:\PHX_Roadway\Worksets\ADOT_PROJECTS_2022R3_10.12_291728040-F0728-SAN SIMON POE\dgn\Roadway\f0728_jt01.dgn

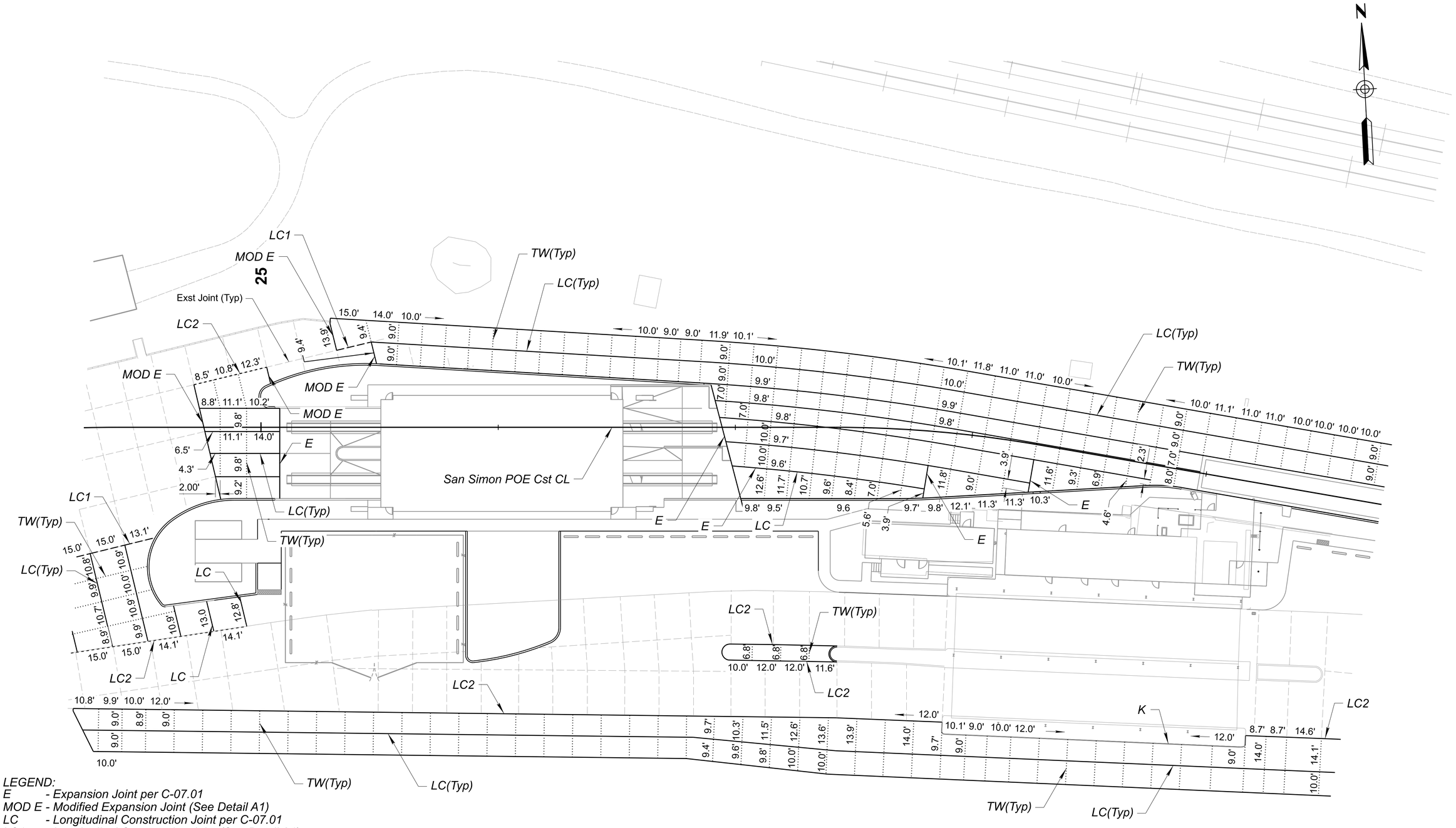

LEGEND:

E - Expansion Joint per C-07.01
MOD E - Modified Expansion Joint (See Detail A1)
LC - Longitudinal Construction Joint per C-07.01
LC1 - Longitudinal Construction Joint (See Detail A1)
LC2 - Modified Longitudinal Construction Joint (See Detail A1)
TW - Transverse Weakened Plane Joint with Load Transfer Dowel assembly C-07.02
K - K Joint per C-07.01

Registered Professional Engineer — 47513 ALLEN R. HATHCOCK — CERTIFICATE NO. — Date Signed 08/26/26

	NAME	DATE
DESIGN	TJB	08/26
DRAWN	ME	08/26
CHECKED	RRG	08/26

Kimley»Horn
© 2026 KIMLEY-HORN AND ASSOCIATES, INC.

ARIZONA DEPARTMENT OF TRANSPORTATION
PROJECT DELIVERY AND OPERATIONS DIVISION
PROJECT MANAGEMENT GROUP

SAN SIMON POE
JOINTING SHEET
Sta 24+25 to 29+75

ROUTE I-10
MILEPOST
STRUCTURE NO.

F.H.W.A. Arizona Division

STATE	PROJECT NO.	FEDERAL ID NO.	SHEET NO.	TOTAL SHEETS	RECORD DRAWING
ARIZ.	010 CH 383	010-F(238)T	26	200	

LOCATION SAN SIMON PORT OF ENTRY (POE)
DWG NO. G-09.02
TRACS NO. F0728 01C
___ OF ___

8:10:42 AM 8/14/2026 TJ.Bulhoes K:\PHX_Roadway\Worksets\ADOT_PROJECTS_2022R3_10.12_291728040-F0728-SAN SIMON POE\dgn\Roadway\f0728_jt02.dgn

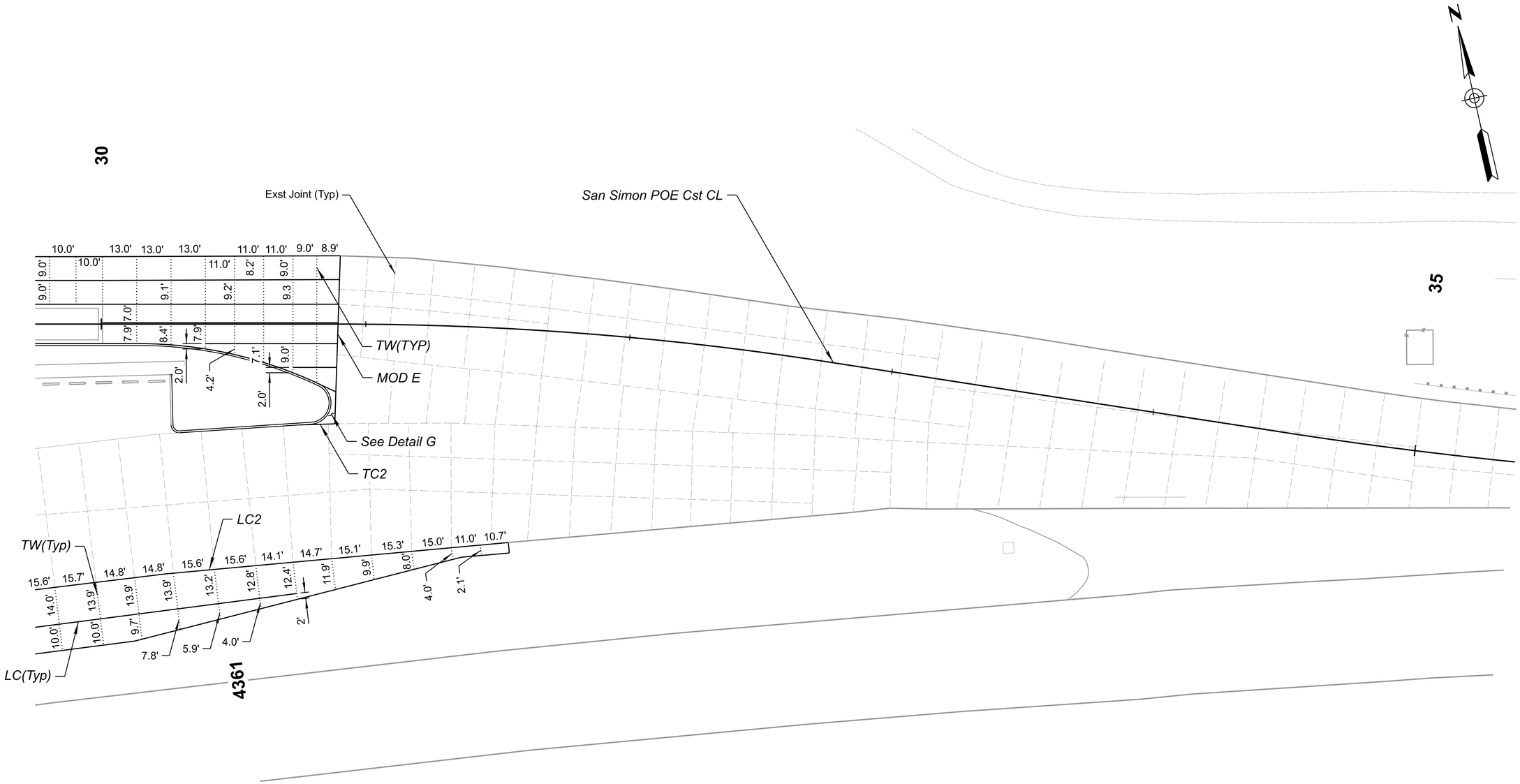

LEGEND:
E - Expansion Joint per C-07.01
MOD E - Modified Expansion Joint (See Detail A1)
LC - Longitudinal Construction Joint per C-07.01
LC1 - Longitudinal Construction Joint (See Detail A1)
LC2 - Modified Longitudinal Construction Joint (See Detail A1)
TW - Transverse Weakened Plane Joint with Load Transfer Dowel assembly C-07.02
K - K Joint per C-07.01

Registered Professional Engineer (Civil) CERTIFICATE NO. 47513 ALLEN R. HATHCOCK State of Arizona
Date Signed 08/26/26

	NAME	DATE
DESIGN	TJB	08/26
DRAWN	ME	08/26
CHECKED	RRG	08/26

Kimley»Horn
© 2026 KIMLEY-HORN AND ASSOCIATES, INC.

ARIZONA DEPARTMENT OF TRANSPORTATION
PROJECT DELIVERY AND OPERATIONS DIVISION
PROJECT MANAGEMENT GROUP

SAN SIMON POE
JOINTING SHEET
Sta 29+75 to 35+38

ROUTE I-10
MILEPOST
STRUCTURE NO.

F.H.W.A. Arizona Division	STATE	PROJECT NO.	FEDERAL ID NO.	SHEET NO.	TOTAL SHEETS	RECORD DRAWING
	ARIZ.	010 CH 383	010-F(238)T	27	200	

LOCATION SAN SIMON PORT OF ENTRY (POE)
DWG NO. G-09.03
TRACS NO. F0728 01C
___ OF ___

8:10:47 AM 8/14/2026 TJ.Bulhoes K:\PHX_Roadway\Worksets\ADOT_PROJECTS_2022R3_10.12_291728040-F0728-SAN SIMON POE\dgn\Roadway\f0728_jt03.dgn

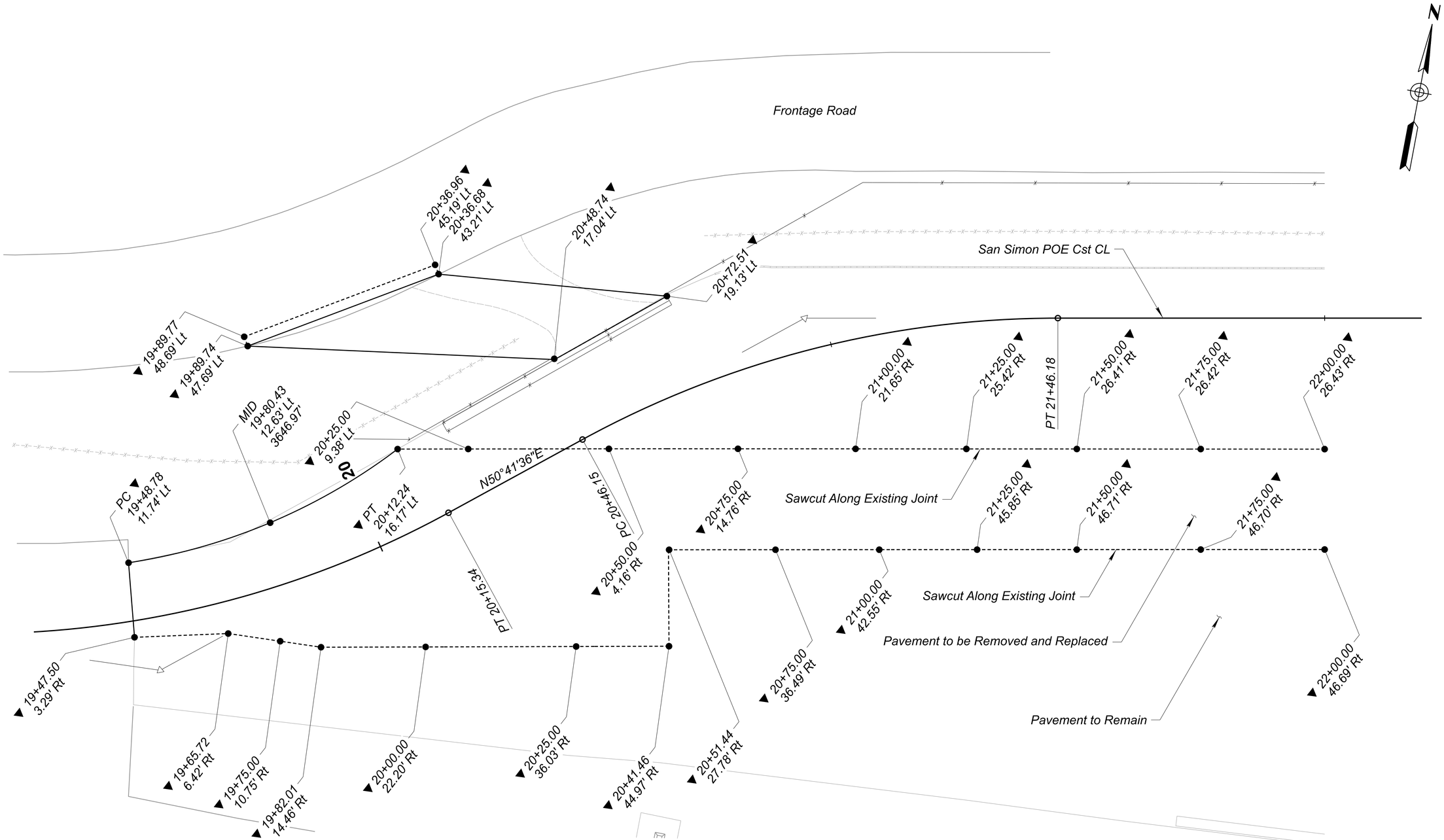

NOTES:
1. *All elevations are to the top of Pavement.*
2. *Stations and offsets are based on the San Simon POE Cst CL, unless noted otherwise.*

LEGEND:

▼ *Match Exst*

Registered Professional Engineer — CERTIFICATE NO. 47513 — ALLEN R. HATHCOCK — State of Arizona — Not Signed or Sealed

	NAME	DATE
DESIGN	TJB	08/26
DRAWN	ME	08/26
CHECKED	RRG	08/26

Kimley»Horn

© 2026 KIMLEY-HORN AND ASSOCIATES, INC.

ARIZONA DEPARTMENT OF TRANSPORTATION
PROJECT DELIVERY AND OPERATIONS DIVISION
PROJECT MANAGEMENT GROUP

SAN SIMON POE
STAKING SHEET
Sta 19+50 to 22+25

ROUTE I-10
MILEPOST
STRUCTURE NO.

F.H.W.A. Arizona Division	STATE	PROJECT NO.	FEDERAL ID NO.	SHEET NO.	TOTAL SHEETS	RECORD DRAWING
	ARIZ.	010 CH 383	010-F(238)T	28	200	

LOCATION: SAN SIMON PORT OF ENTRY (POE)

TRACS NO. F0728 01C

DWG NO. G-10.01

___ OF ___

8:10:56 AM 8/14/2026 TJ.Bulhoes K:\PHX_Roadway\Worksets\ADOT_PROJECTS_2022R3_10.12_291728040-F0728-SAN SIMON POE\dgn\Roadway\f0728_stk01.dgn

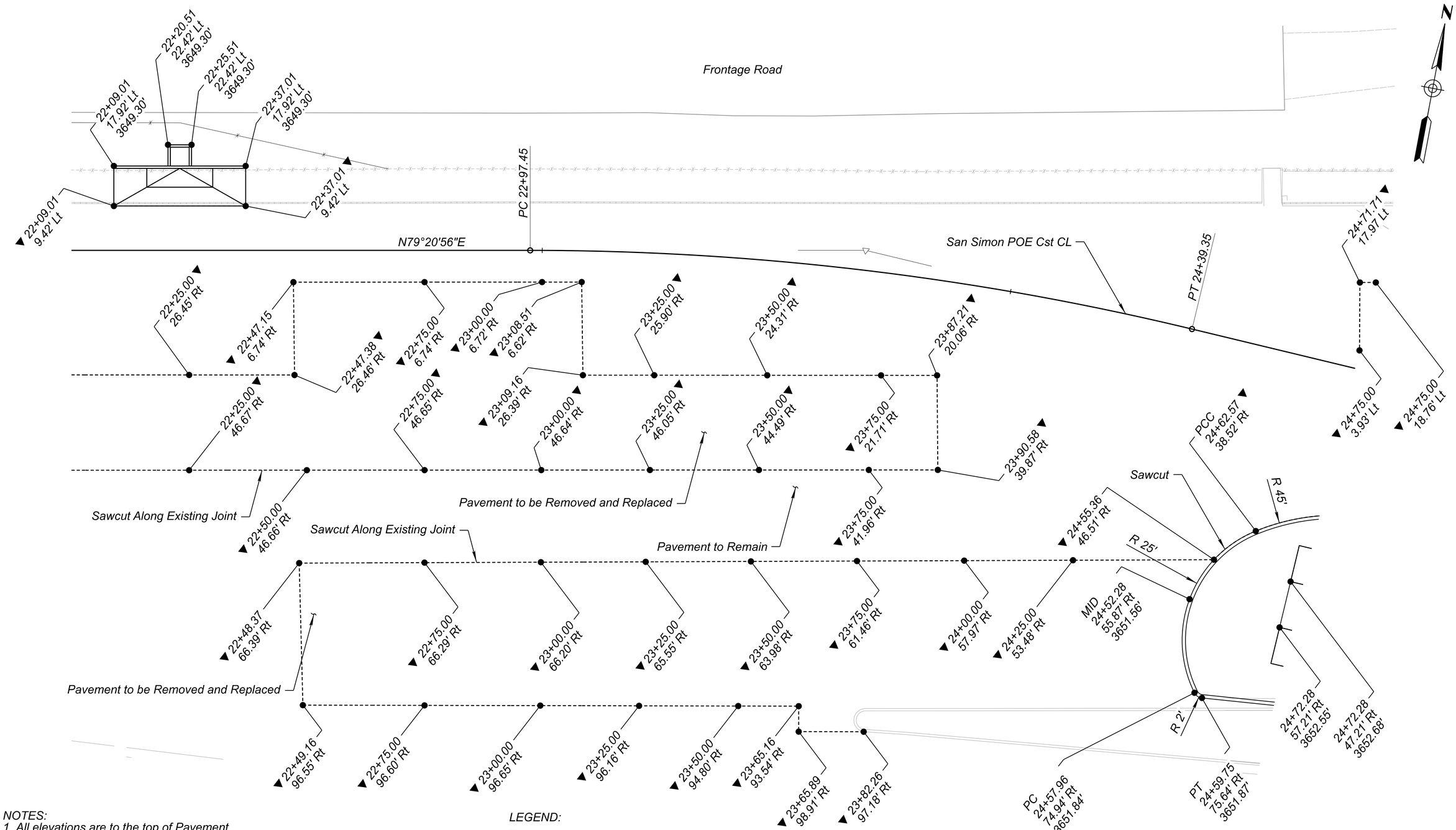

NOTES:
1. All elevations are to the top of Pavement.
2. Stations and offsets are based on the San Simon POE Cst CL, unless noted otherwise.

LEGEND:
▼ Match Exst

Registered Professional Engineer
47513
ALLEN R. HATHCOCK
CERTIFICATE NO.
Date Signed 08/26/26
Not to be altered by anyone except the signed registrant.

	NAME	DATE
DESIGN	TJB	08/26
DRAWN	ME	08/26
CHECKED	RRG	08/26

Kimley»Horn
© 2026 KIMLEY-HORN AND ASSOCIATES, INC.

ARIZONA DEPARTMENT OF TRANSPORTATION
PROJECT DELIVERY AND OPERATIONS DIVISION
PROJECT MANAGEMENT GROUP

SAN SIMON POE
STAKING SHEET
Sta 22+25 to 25+00

ROUTE I-10
MILEPOST
STRUCTURE NO.

F.H.W.A. Arizona Division	STATE	PROJECT NO.	FEDERAL ID NO.	SHEET NO.	TOTAL SHEETS	RECORD DRAWING
	ARIZ.	010 CH 383	010-F(238)T	29	200	

LOCATION SAN SIMON PORT OF ENTRY (POE)
DWG NO. G-10.02
TRACS NO. F0728 01C
___ OF ___

8:11:01 AM 8/14/2026 TJ.Bulhoes K:\PHX_Roadway\Worksets\ADOT_PROJECTS_2022R3_10.12_291728040-F0728-SAN SIMON POE\dgn\Roadway\f0728_stk02.dgn

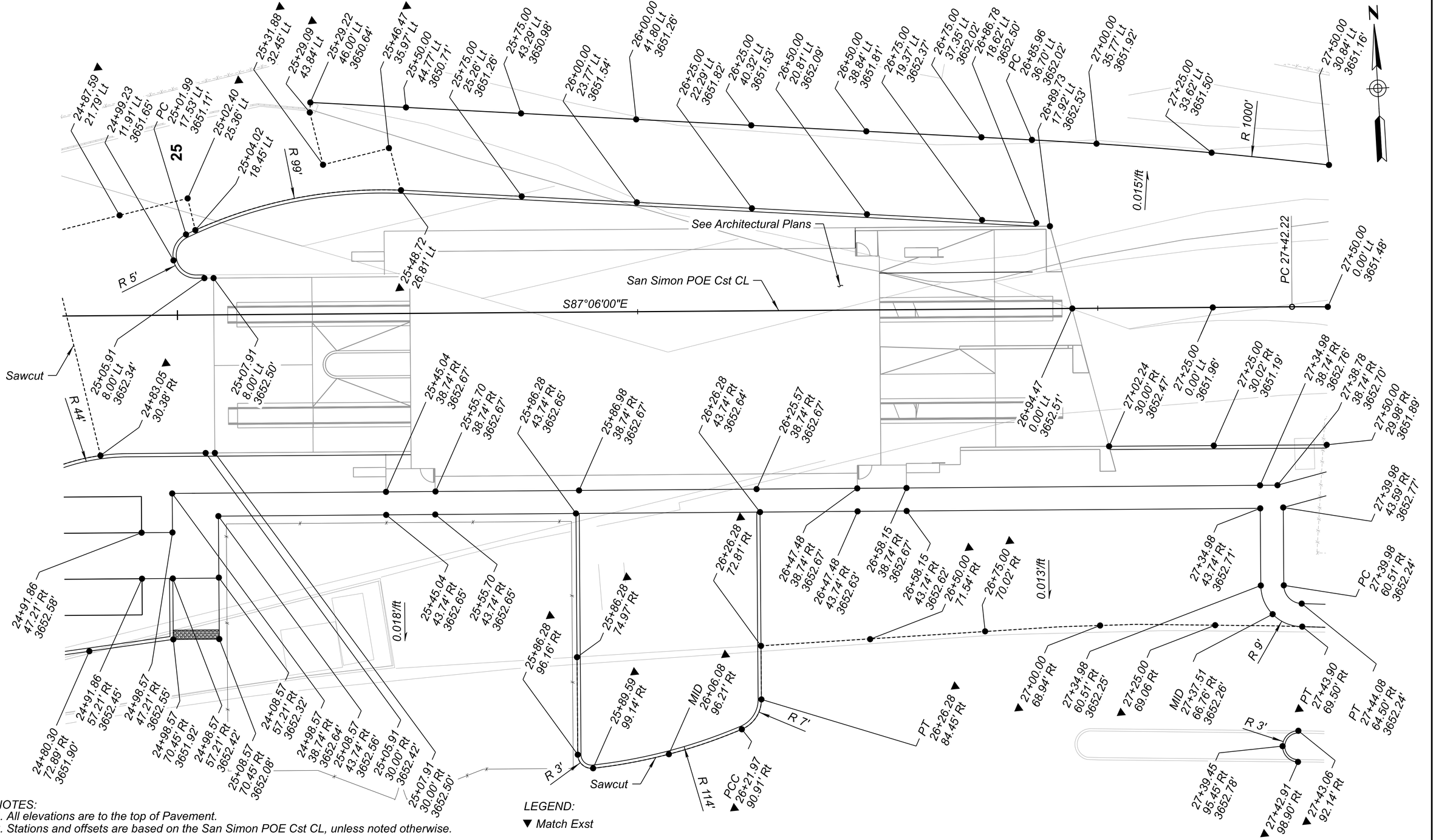

NOTES:
1. All elevations are to the top of Pavement.
2. Stations and offsets are based on the San Simon POE Cst CL, unless noted otherwise.

LEGEND:
▼ Match Exst

	NAME	DATE
DESIGN	TJB	08/26
DRAWN	ME	08/26
CHECKED	RRG	08/26

Kimley»Horn
© 2026 KIMLEY-HORN AND ASSOCIATES, INC.

ARIZONA DEPARTMENT OF TRANSPORTATION
PROJECT DELIVERY AND OPERATIONS DIVISION
PROJECT MANAGEMENT GROUP

SAN SIMON POE
STAKING SHEET
Sta 25+25 to 27+50

ROUTE I-10
MILEPOST
STRUCTURE NO.

F.H.W.A. Arizona Division

STATE	PROJECT NO.	FEDERAL ID NO.	SHEET NO.	TOTAL SHEETS	RECORD DRAWING
ARIZ.	010 CH 383	010-F(238)T	30	200	

LOCATION: SAN SIMON PORT OF ENTRY (POE)

DWG NO. G-10.03

TRACS NO. F0728 01C

___ OF ___

8:11:08 AM 8/14/2026 TJ.Bulhoes K:\PHX_Roadway\Worksets\ADOT_PROJECTS_2022R3_10.12_291728040-F0728-SAN SIMON POE\dgn\Roadway\f0728_stk03.dgn

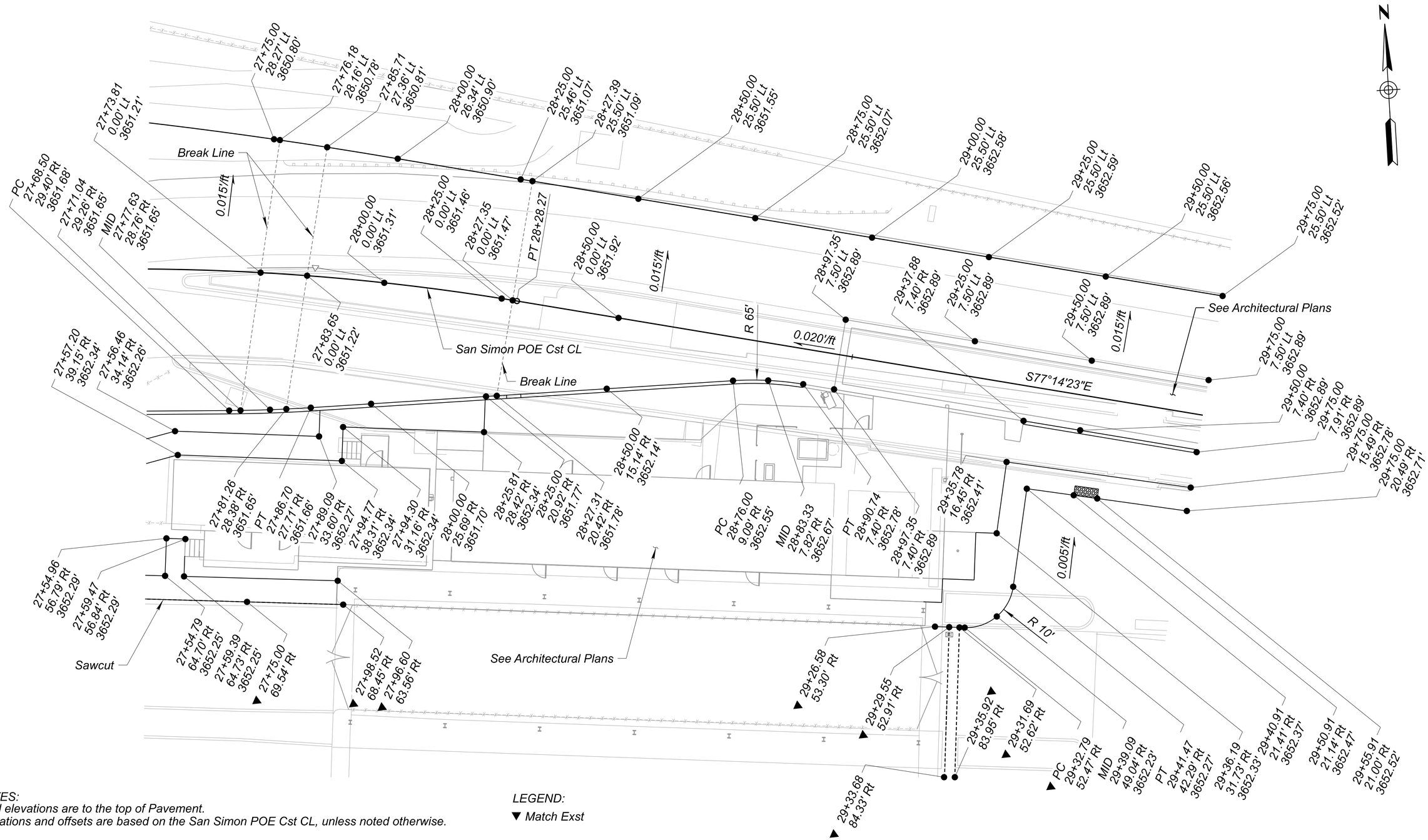

NOTES:
1. *All elevations are to the top of Pavement.*
2. *Stations and offsets are based on the San Simon POE Cst CL, unless noted otherwise.*

LEGEND:

▼ *Match Exst*

Registered Professional Engineer (Civil)
CERTIFICATE NO.
47513
ALLEN R. HATHCOCK
Date Signed 08/14/26

	NAME	DATE
DESIGN	TJB	08/26
DRAWN	ME	08/26
CHECKED	RRG	08/26

Kimley»Horn

© 2026 KIMLEY-HORN AND ASSOCIATES, INC.

ARIZONA DEPARTMENT OF TRANSPORTATION
PROJECT DELIVERY AND OPERATIONS DIVISION
PROJECT MANAGEMENT GROUP

SAN SIMON POE
STAKING SHEET
Sta 27+50 to 29+75

ROUTE I-10
MILEPOST
STRUCTURE NO.

F.H.W.A. Arizona Division	STATE	PROJECT NO.	FEDERAL ID NO.	SHEET NO.	TOTAL SHEETS	RECORD DRAWING
	ARIZ.	010 CH 383	010-F(238)T	31	200	

LOCATION SAN SIMON PORT OF ENTRY (POE)

DWG NO. G-10.04

TRACS NO. F0728 01C

____ OF ____

9:32:41 AM 8/14/2026 TJ.Bulhoes K:\PHX_Roadway\Worksets\ADOT_PROJECTS_2022R3_10.12_291728040-F0728-SAN SIMON POE\dgn\Roadway\f0728_stk04.dgn

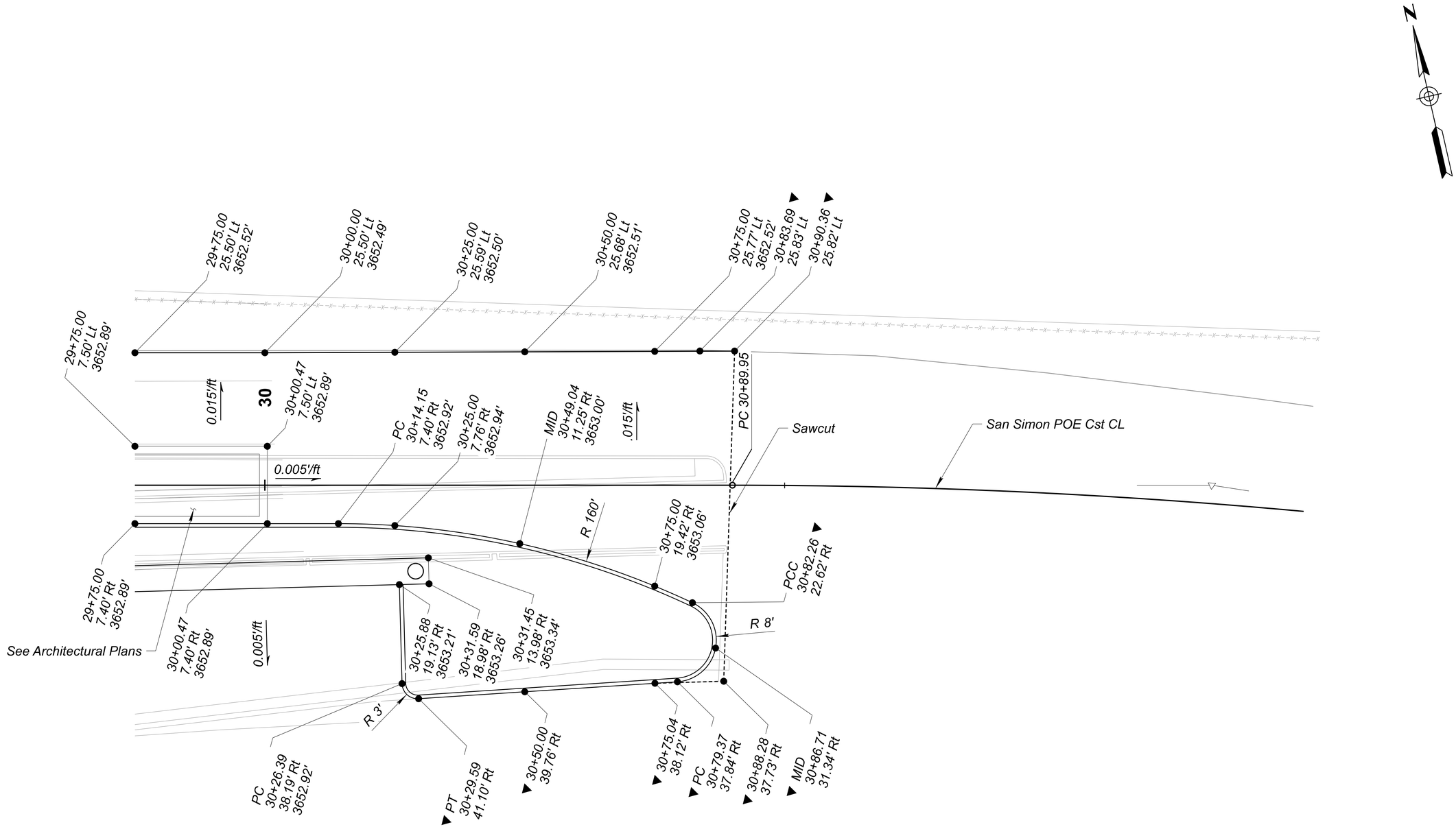

NOTES:
1. *All elevations are to the top of Pavement.*
2. *Stations and offsets are based on the San Simon POE Cst CL, unless noted otherwise.*

LEGEND:

▼ *Match Exst*

Registered Professional Engineer
CERTIFICATE NO.
47513
ALLEN R. HATHCOCK
State of Arizona
Date Signed 08/26/26

	NAME	DATE
DESIGN	TJB	08/26
DRAWN	ME	08/26
CHECKED	RRG	08/26

Kimley»Horn

© 2026 KIMLEY-HORN AND ASSOCIATES, INC.

ARIZONA DEPARTMENT OF TRANSPORTATION
PROJECT DELIVERY AND OPERATIONS DIVISION
PROJECT MANAGEMENT GROUP

SAN SIMON POE
STAKING SHEET
Sta 29+75 to 31+00

ROUTE	F.H.W.A. Arizona Division	STATE	PROJECT NO.	FEDERAL ID NO.	SHEET NO.	TOTAL SHEETS	RECORD DRAWING
I-10		ARIZ.	010 CH 383	010-F(238)T	32	200	
MILEPOST	LOCATION	SAN SIMON PORT OF ENTRY (POE)					DWG NO. G-10.05
STRUCTURE NO.	TRACS NO. F0728 01C						___ OF___

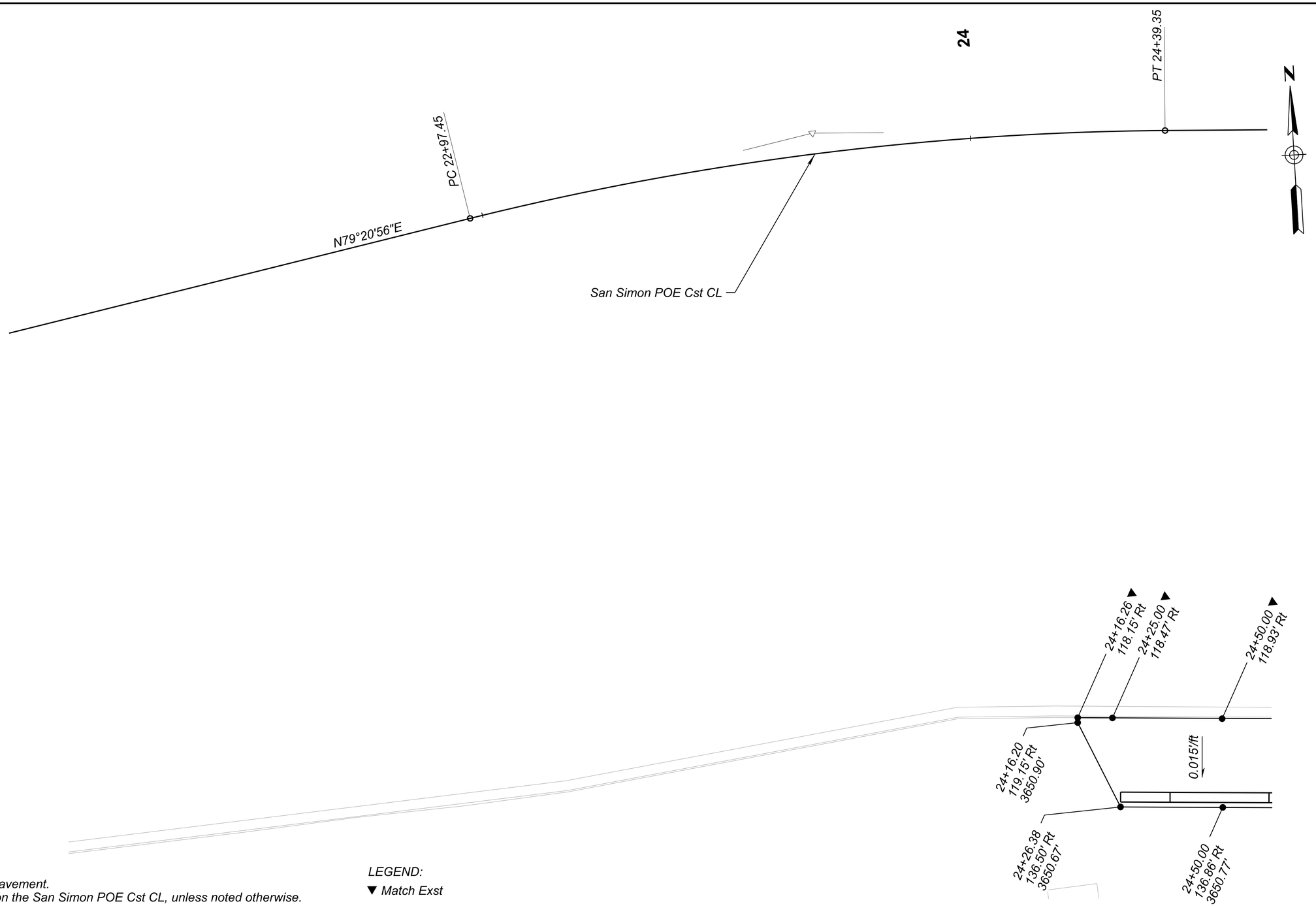

NOTES:
1. *All elevations are to the top of Pavement.*
2. *Stations and offsets are based on the San Simon POE Cst CL, unless noted otherwise.*

LEGEND:

▼ *Match Exst*

Registered Professional Engineer (Civil) CERTIFICATE NO. 47513 ALLEN R. HATHCOCK State of Arizona — Date signed 08/26/26

	NAME	DATE
DESIGN	TJB	08/26
DRAWN	ME	08/26
CHECKED	RRG	08/26

Kimley»Horn

© 2026 KIMLEY-HORN AND ASSOCIATES, INC.

ARIZONA DEPARTMENT OF TRANSPORTATION
PROJECT DELIVERY AND OPERATIONS DIVISION
PROJECT MANAGEMENT GROUP

SAN SIMON POE
STAKING SHEET
Sta 22+00 to 24+60

ROUTE I-10
MILEPOST
STRUCTURE NO.

F.H.W.A. Arizona Division	STATE	PROJECT NO.	FEDERAL ID NO.	SHEET NO.	TOTAL SHEETS	RECORD DRAWING
	ARIZ.	010 CH 383	010-F(238)T	33	200	

LOCATION SAN SIMON PORT OF ENTRY (POE)

DWG NO. G-10.06

TRACS NO. F0728 01C

___ OF___

8:11:33 AM 8/14/2026 TJ.Bulhoes K:\PHX_Roadway\Worksets\ADOT_PROJECTS_2022R3_10.12_291728040-F0728-SAN SIMON POE\dgn\Roadway\f0728_stk06.dgn

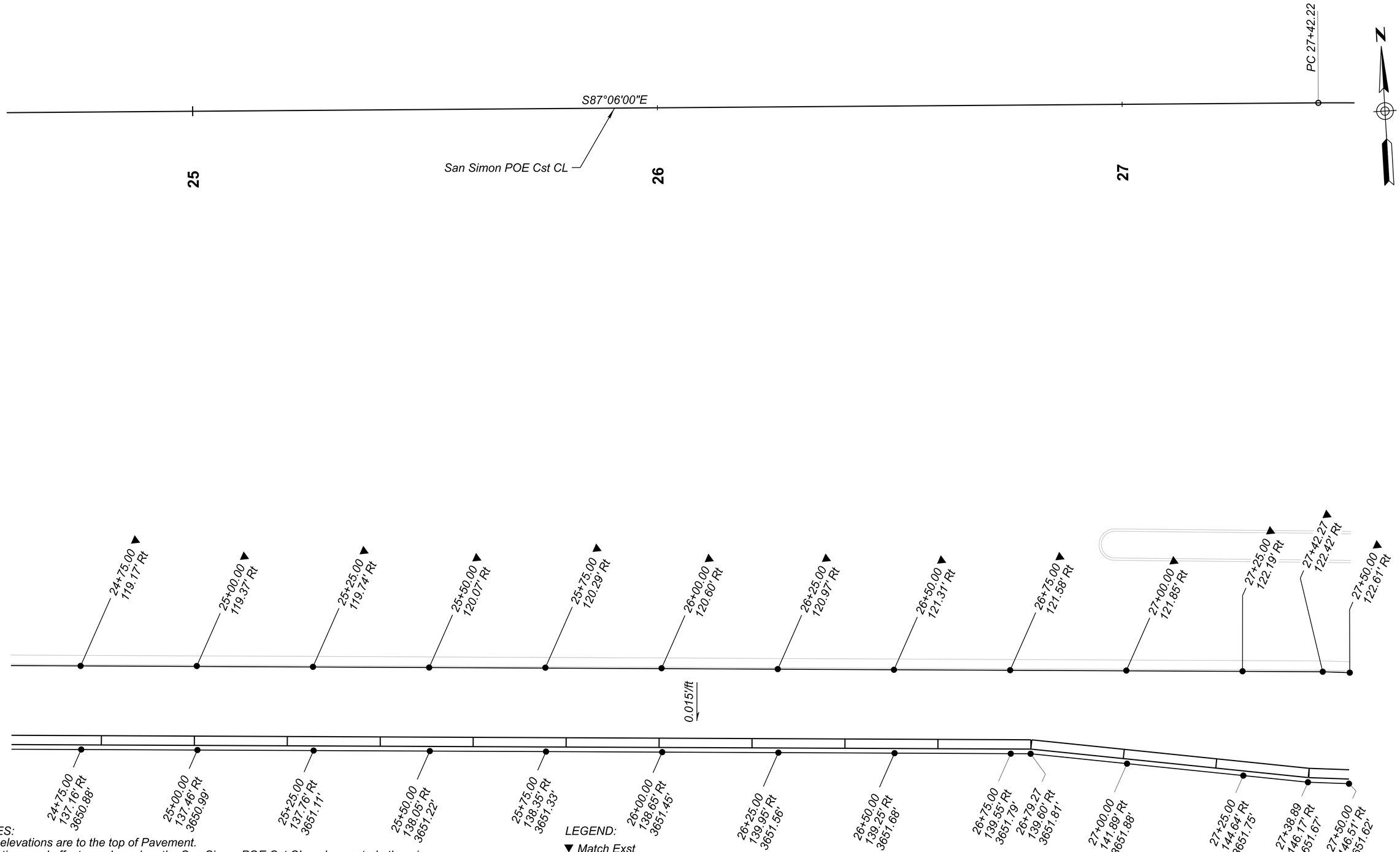

NOTES:
1. All elevations are to the top of Pavement.
2. Stations and offsets are based on the San Simon POE Cst CL, unless noted otherwise.

LEGEND:
▼ Match Exst

Registered Professional Engineer (Civil) CERTIFICATE NO. 47513 ALLEN R. HATHCOCK State of Arizona

	NAME	DATE
DESIGN	TJB	08/26
DRAWN	ME	08/26
CHECKED	RRG	08/26

Kimley»Horn
© 2026 KIMLEY-HORN AND ASSOCIATES, INC.

ARIZONA DEPARTMENT OF TRANSPORTATION
PROJECT DELIVERY AND OPERATIONS DIVISION
PROJECT MANAGEMENT GROUP

SAN SIMON POE
STAKING SHEET
Sta 24+60 to 27+50

ROUTE I-10
MILEPOST
STRUCTURE NO.

F.H.W.A. Arizona Division	STATE	PROJECT NO.	FEDERAL ID NO.	SHEET NO.	TOTAL SHEETS	RECORD DRAWING
	ARIZ.	010 CH 383	010-F(238)T	34	200	

LOCATION SAN SIMON PORT OF ENTRY (POE)
DWG NO. G-10.07
TRACS NO. F0728 01C
___ OF___

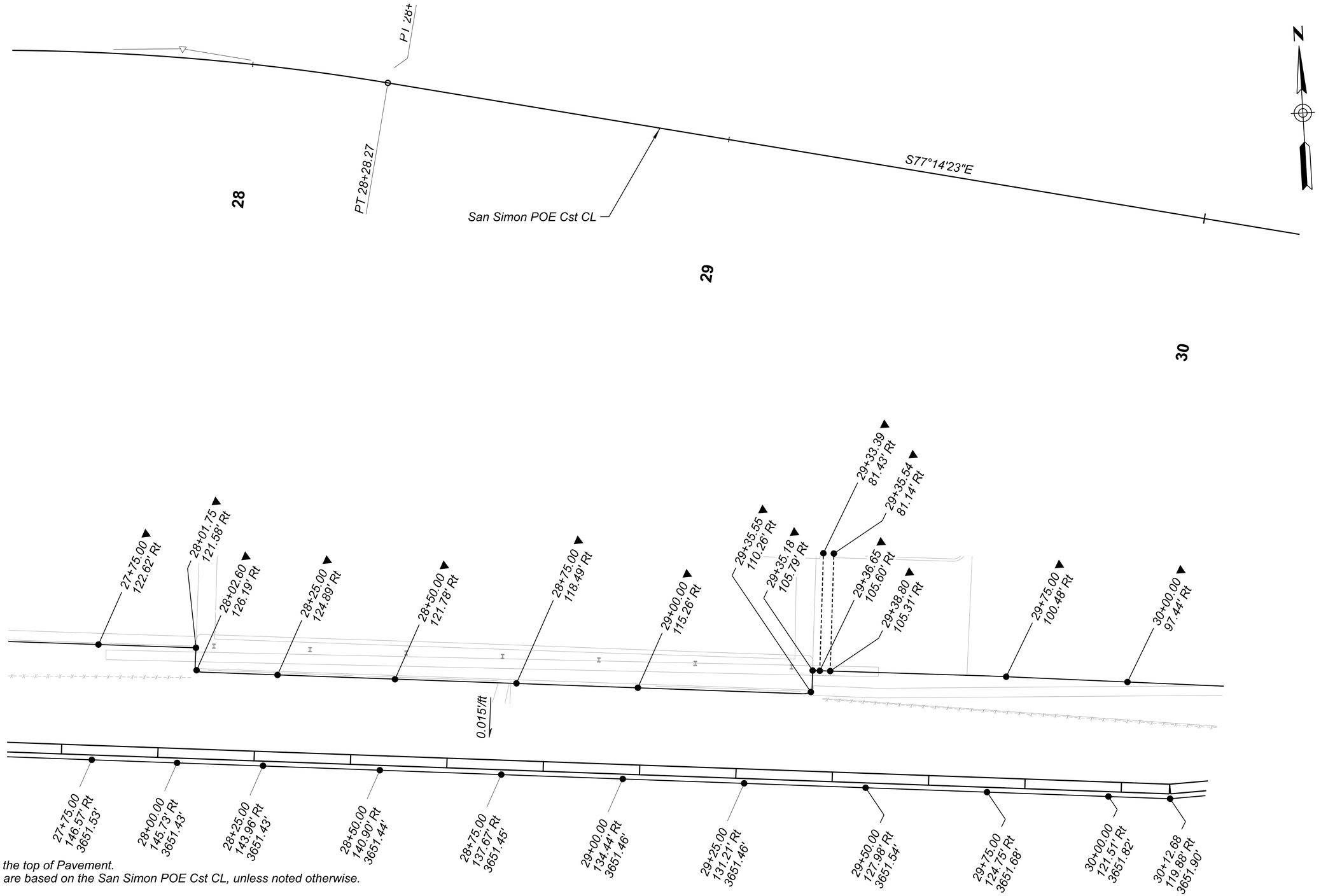

LEGEND:

▼ *Match Exst*

NOTES:

1. *All elevations are to the top of Pavement.*
2. *Stations and offsets are based on the San Simon POE Cst CL, unless noted otherwise.*

Registered Professional Engineer
47513
ALLEN R. HATHCOCK
CERTIFICATE NO.
Date Signed 08/26/26

	NAME	DATE
DESIGN	TJB	08/26
DRAWN	ME	08/26
CHECKED	RRG	08/26

Kimley»Horn

© 2026 KIMLEY-HORN AND ASSOCIATES, INC.

ARIZONA DEPARTMENT OF TRANSPORTATION
PROJECT DELIVERY AND OPERATIONS DIVISION
PROJECT MANAGEMENT GROUP

SAN SIMON POE
STAKING SHEET
Sta 27+50 to 30+20

ROUTE I-10
MILEPOST
STRUCTURE NO.

F.H.W.A. Arizona Division

STATE	PROJECT NO.	FEDERAL ID NO.	SHEET NO.	TOTAL SHEETS	RECORD DRAWING
ARIZ.	010 CH 383	010-F(238)T	35	200	

LOCATION SAN SIMON PORT OF ENTRY (POE)

DWG NO. G-10.08

TRACS NO. F0728 01C

____ OF____

9:32:48 AM 8/14/2026 TJ.Bulhoes K:\PHX_Roadway\Worksets\ADOT_PROJECTS_2022R3_10.12_291728040-F0728-SAN SIMON POE\dgn\Roadway\f0728_stk08.dgn

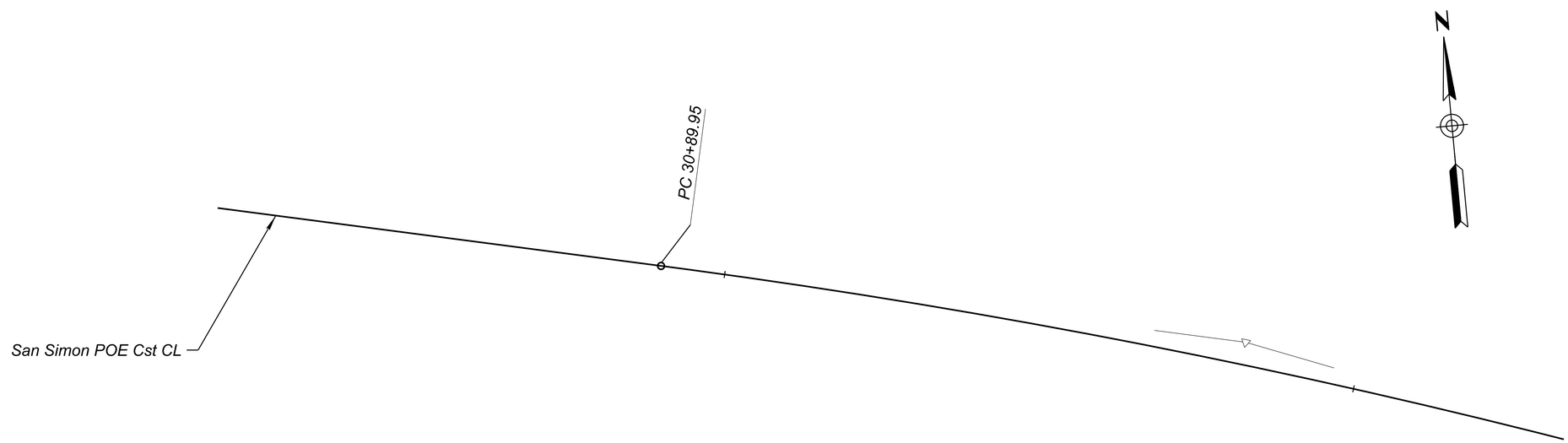

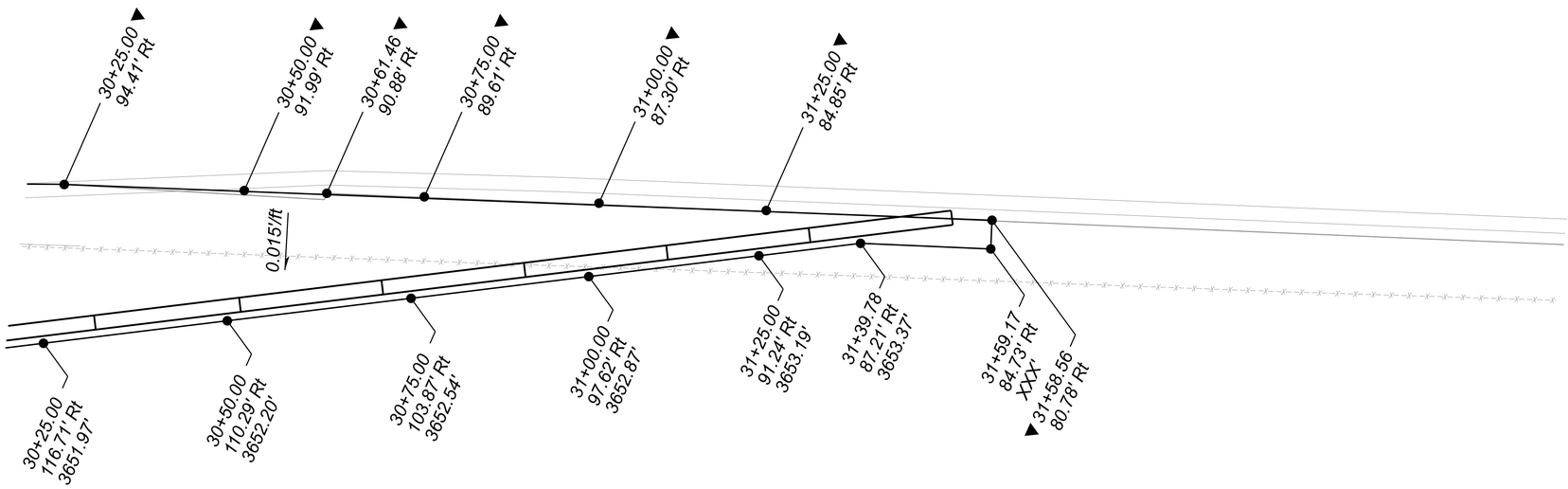

NOTES:
1. *All elevations are to the top of Pavement.*
2. *Stations and offsets are based on the San Simon POE Cst CL, unless noted otherwise.*

LEGEND:

▼ *Match Exst*

Registered Professional Engineer CERTIFICATE NO. 47513 ALLEN R. HATHCOCK (Civil) State of Arizona

	NAME	DATE
DESIGN	TJB	08/26
DRAWN	ME	08/26
CHECKED	RRG	08/26

Kimley»Horn

© 2026 KIMLEY-HORN AND ASSOCIATES, INC.

ARIZONA DEPARTMENT OF TRANSPORTATION
PROJECT DELIVERY AND OPERATIONS DIVISION
PROJECT MANAGEMENT GROUP

SAN SIMON POE
STAKING SHEET
Sta 30+00 to 32+00

ROUTE I-10
MILEPOST
STRUCTURE NO.

F.H.W.A. Arizona Division	STATE	PROJECT NO.	FEDERAL ID NO.	SHEET NO.	TOTAL SHEETS	RECORD DRAWING
	ARIZ.	010 CH 383	010-F(238)T	36	200	

LOCATION SAN SIMON PORT OF ENTRY (POE)

DWG NO. G-10.09

TRACS NO. F0728 01C

___ OF___

8:12:13 AM 8/14/2026 TJ.Bulhoes K:\PHX_Roadway\Worksets\ADOT_PROJECTS_2022R3_10.12_291728040-F0728-SAN SIMON POE\dgn\Roadway\f0728_stk09.dgn

TRAFFIC CONTROL GENERAL NOTES

1. *All existing signs in conflict with the construction signs shall be removed, relocated, or covered in place, as directed by the Engineer. The contractor shall store and reinstall items which have been removed or relocated in a manner approved by the Engineer.*

2. *The retroreflective sheeting on all construction signs shall meet criteria established in Section 1007 of ADOT Standard Specifications and in Section 380 of the ADOT Traffic Guidelines and Processes (TGP).*

3. *All signs shown on the plans shall be mounted on embedded posts. Signs installed on embedded posts shall be mounted at a minimum height of 7 feet as measured from the bottom of the sign to the near edge of the pavement. All other short-term signs may be installed on spring stands, at the height recommended by the spring stand manufacturer.*

4. *The nearest edge or corner of a sign shall be approximately 12 feet from the nearest edge of pavement for all signs mounted on embedded posts.*

5. *Flags shall be mounted on top of all construction signs except the "END ROAD WORK THANK YOU" sign.*

6. *Type A flashing warning lights shall be required on all nighttime construction signs except the "END ROAD WORK THANK YOU" sign.*

7. *Type C steady-burning yellow lights shall be mounted on every barricade.*

8. *Channelizing devices shall be placed 40 feet on center in tapers and 80 feet on center in tangents, except as otherwise noted on plans.*

9. *Construction signs shall not be displayed to traffic more than 24 hours prior to the actual start of construction. These signs may be installed sooner but they must be covered or turned away from traffic. The cost for covering or turning them shall be considered part of the sign installation cost. No further compensation will be made. These signs shall be removed within 24 hours after the completion of construction activities.*

10. *All construction signs shall have black letters on an orange background, except as otherwise noted.*

11. *Speed limit signing is preliminary and is subject to review and change by the Engineer as dictated by field conditions.*

12. *Where no closure is necessary but where there is construction alongside a roadway under construction, the contractor shall place a 48 x 48 inch "ROAD WORK AHEAD" and "SHOULDER WORK AHEAD" sign as directed by the Engineer to alert the public to the construction activities.*

13. *The contractor may substitute Type I barricades for Type II barricades as long as the reflective area on the top panel of each Type I barricades is equivalent or greater than the reflective area of a Type II barricade.*

14. *When traffic control devices are not in use, they shall be moved at least 30 feet from the roadway.*

15. *The contractor shall maintain two-way traffic on I-10 at all times.*

16. *An adequate number of Type III barricades shall be placed across each roadway to be closed. A 48 x 30 inch "ROAD CLOSED" or "RAMP CLOSED" sign, as appropriate, shall be attached to one of the Type III barricades closing the roadway. A Type A flashing warning light shall be mounted on each end of each Type III barricade.*

17. *The contractor shall remove the existing pavement markers in connection with the stripe obliteration activities.*

18. *The contractor shall utilize a flashing arrow panel in the sequential chevron mode for each closure of a through lane. The contractor shall not utilize a flashing arrow panel in connection with any shifting taper.*

19. *All drawings are schematic only and not to scale.*

20. *The contractor shall prepare traffic control plans and an access management plan in accordance with Section 701 of the specifications. All traffic control and access management plans are subject to the approval of the Engineer before beginning construction.*

21. *Adjustments to the details of the construction phasing plans and requirements may be necessary due to construction activities or as directed by the Engineer.*

22. *Temporary pavement markings shall be removed by approved methods when no longer required.*

23. *Temporary pavement markings shall be Type II preformed pavement marking tape. The pavement temperature shall be at least 60 degrees F when the tape is applied to the pavement. If the temperature is below 60 degrees F, then standard reflectorized traffic paint shall be used. The contractor shall remove the Type II tape at the completion of each phase of work at the contractor's expense.*

TRAFFIC CONTROL QUANTITIES								
ELEMENT OF WORK	UNIT	Activity 1	Activity 2	Activity 3	Activity 4	Activity 5	Activity 6	TOTAL QTYS**
ESTIMATED DURATION	DAYS*	441	25	340	46	20	5	441
TEMPORARY PREFORMED MARKING (TYPE II, TAPE LINE)	L.FT.	0	0	0	1500	1500	0	3,000
BARRICADE (TYPE 1, TYPE 2, VERT.PANEL, TUBULAR MARKER)	EACH-DAY	8820	1875	51000	6900	1500	0	70,090
BARRICADE (TYPE 3, HIGH LEVEL FLAG TREE)	EACH-DAY	0	500	15300	2070	400	0	18,270
PORTABLE SIGN STAND (SPRING TYPE)	EACH-DAY	0	625	8500	1150	500	0	10,770
WARNING LIGHT (TYPE A)	EACH-DAY	2205	625	8500	1150	500	0	12,980
WARNING LIGHT (TYPE C)	EACH-DAY	8820	1875	51000	6900	1500	0	70,090
EMBEDDED SIGN POST	EACH-DAY	4410	0	0	0	0	0	4,410
TEMPORARY SIGN (LESS THAN 10 S.F.)	EACH-DAY	0	225	3060	414	180	0	3,870
TEMPORARY SIGN (10 S.F. OR MORE)	EACH-DAY	2205	400	5440	736	320	0	9,100
CHANGEABLE MESSAGE BOARD (CONTRACTOR FURNISHED)	EACH-DAY	882	0	0	0	0	0	882

** Durations are in working days.*

*** Total quantities may not equal sum of quantities due to rounding.*

Registered Professional Engineer (Civil)
CERTIFICATE NO.
80518
RACHEL
GRANO
Date 8/14/2026

	NAME	DATE
DESIGN	RRG	08/26
DRAWN	EG	08/26
CHECKED	RRG	08/26

Kimley»Horn
© 2026 KIMLEY-HORN AND ASSOCIATES, INC.

ARIZONA DEPARTMENT OF TRANSPORTATION
PROJECT DELIVERY AND OPERATIONS DIVISION
PROJECT MANAGEMENT GROUP

TRAFFIC CONTROL GENERAL NOTES AND QUANTITIES

ROUTE I-10
MILEPOST
STRUCTURE NO.

F.H.W.A. Arizona Division

STATE	PROJECT NO.	FEDERAL ID NO.	SHEET NO.	TOTAL SHEETS	RECORD DRAWING
ARIZ.	010 CH 383	010-F(238)T	37	200	

LOCATION SAN SIMON PORT OF ENTRY (POE)

DWG NO. :T-01.01

TRACS NO. F0728 01C

___ OF___

LEGEND:

Work Zone

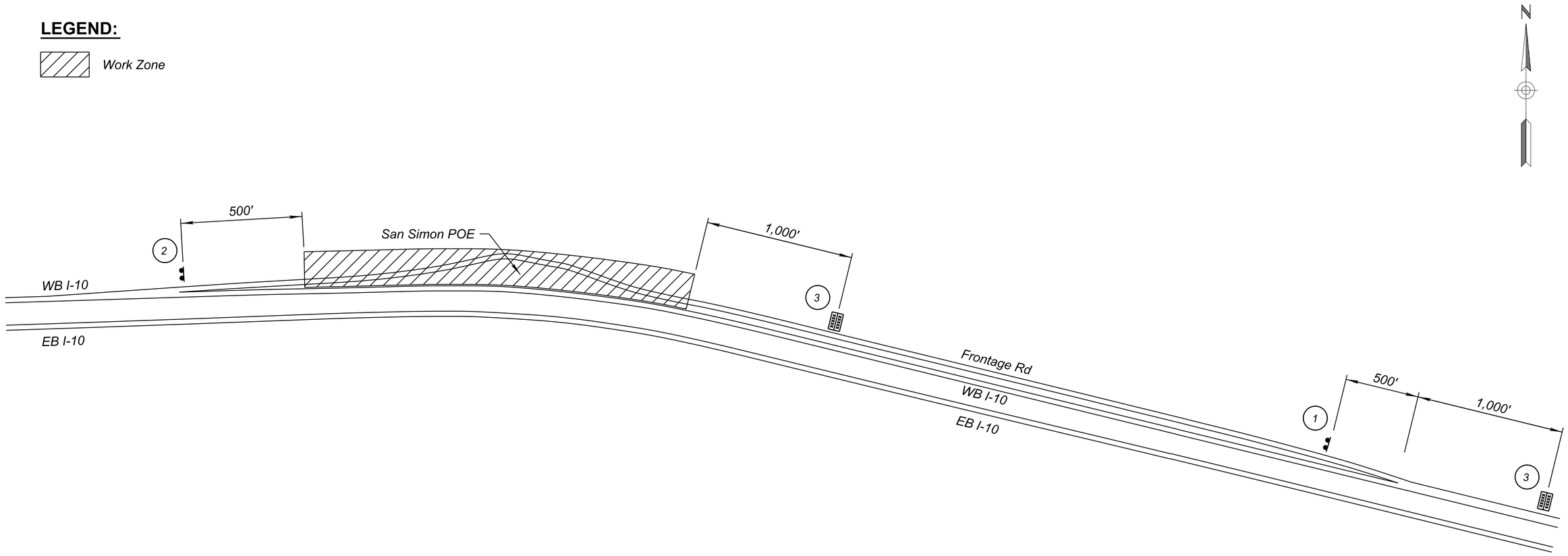

SIGN LEGEND:

1



W20-1
48" x 48"
Black on Orange

2

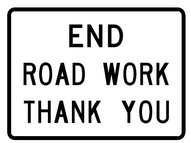

G20-2AZ
48" x 36"
Black on Orange

3

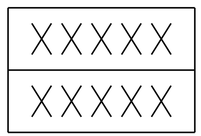

Changeable Message Board

DETAIL TC-A

ADVANCE WARNING SIGN PLACEMENT
N.T.S.

Registered Professional Engineer (Civil) CERTIFICATE NO. 80518 RACHEL GRANO Date: 7/14/2026

	NAME	DATE
DESIGN	RRG	08/26
DRAWN	EG	08/26
CHECKED	RRG	08/26

Kimley»Horn

© 2026 KIMLEY-HORN AND ASSOCIATES, INC.

ARIZONA DEPARTMENT OF TRANSPORTATION
PROJECT DELIVERY AND OPERATIONS DIVISION
PROJECT MANAGEMENT GROUP

TRAFFIC CONTROL DETAIL
ADVANCE WARNING SIGN PLACEMENT

ROUTE I-10
MILEPOST
STRUCTURE NO.

F.H.W.A. Arizona Division	STATE	PROJECT NO.	FEDERAL ID NO.	SHEET NO.	TOTAL SHEETS	RECORD DRAWING
	ARIZ.	010 CH 383	010-F(238)T	38	200	

LOCATION SAN SIMON PORT OF ENTRY (POE)
DWG NO. T-01.02
TRACS NO. F0728 01C
___ OF ___

8:12:54 AM 8/14/2026 TJ.Bulhoes K:\PHX_Roadway\Worksets\ADOT_PROJECTS_2022R3_10.12_291728040-F0728-SAN SIMON POE\dgn\Traffic\f0728_tc01_sansimon.dgn

MAINTENANCE AND PROTECTION OF TRAFFIC

	Construction Activity	Tasks	Traffic Control	Remarks
1	Mobilization and Install Advance Warning Signs		Maintain all existing travel lanes. Provide advance warning signs per Detail TC-A.	Advanced warning signs shall be placed on embedded posts per Detail TC-A.
2	Construction Phase 1	- Median Removal - Construct New IRD equipment - Coordinate with Drivewyze, Prepass and IRD for Relocation of their Equipment - Construct Bypass Lane - Modify Water Service Line System	Install traffic control measures throughout the port of entry during the construction of each task to ensure vehicle access through the port at all times.	Temporary traffic control signs shall be placed on spring stands. Provide a minimum of 15 parking spaces for trucks. Provide a minimum of 13 parking spaces for port staff/officer vehicles. Existing water service line system shall be maintained until new system is installed and operational
3	Construction Phase 2A	- Modify Street Lighting System - Construct New Weigh Scale, Scale Pit, and Scoreboard - Construct New Inspection Building - Construct New Lift Station with Grinder Pump - Construct New Water Oil Separation System - Construct New Well Site - Construct New Weigh-Master Booth/Admin Building - Construct New Lane Control Signal System - Construct New Video Surveillance System - Relocate Sign Structure - Relocate Conflicting Temporary Concrete Barrier	Install traffic control measures throughout the port of entry during the construction of each task to ensure vehicle access through the port at all times.	Temporary traffic control signs shall be placed on spring stands. Provide a minimum of 10 parking spaces for trucks Provide a minimum of 13 parking spaces for port staff/officer vehicles Existing street lighting system shall be maintained until new system is installed and operational Existing video surveillance system shall be maintained until new system is installed and operational.
4	Construction Phase 2B	- Construct Pavement Rehab - Construct New Hazardous Containment Facility - Construct New Access Control Gate	Install traffic control measures throughout the port of entry during the construction of each task to ensure vehicle access through the port at all times. Install temporary pavement markings to delineate truck parking spaces.	Temporary traffic control signs shall be placed on spring stands. Provide a minimum of 5 parking spaces for trucks Provide a minimum of 13 parking spaces for port staff/officer vehicles
5	Construction Phase 3	- Construct Remaining Pavement Rehab - Construct New Secure Parking Area - Relocate Conex Boxes - Relocate Temporary Concrete Barrier to Ultimate Location	Install traffic control measures throughout the port of entry during the construction of each task to ensure vehicle access through the port at all times. Install temporary pavement markings to delineate truck parking spaces.	Temporary traffic control signs shall be placed on spring stands. Provide a minimum of 8 parking spaces for trucks Provide a minimum of 13 parking spaces for port staff/officer vehicles
6	Demobilization		Maintain all existing travel lanes.	

NOTES:

1. The order of tasks in each construction phase does not constitute a sequence of construction.

Registered Professional Engineer (Civil) CERTIFICATE NO. 80518 RACHEL GRANO Date Signed 08/14/2026

	NAME	DATE
DESIGN	RRG	08/26
DRAWN	EG	08/26
CHECKED	RRG	08/26

Kimley»Horn

© 2026 KIMLEY-HORN AND ASSOCIATES, INC.

ARIZONA DEPARTMENT OF TRANSPORTATION
PROJECT DELIVERY AND OPERATIONS DIVISION
PROJECT MANAGEMENT GROUP

MAINTENANCE OF TRAFFIC

ROUTE I-10
MILEPOST
STRUCTURE NO.

F.H.W.A. Arizona Division

STATE	PROJECT NO.	FEDERAL ID NO.	SHEET NO.	TOTAL SHEETS	RECORD DRAWING
ARIZ.	010 CH 383	010-F(238)T	39	200	

LOCATION SAN SIMON PORT OF ENTRY (POE)

DWG NO. T-01.03

TRACS NO. F0728 01C

___ OF ___

PHASE 1 CONSTRUCTION NOTES:

- Maintain vehicle access through the POE at all times during times of operations

LEGEND:

Truck Path

Work Area

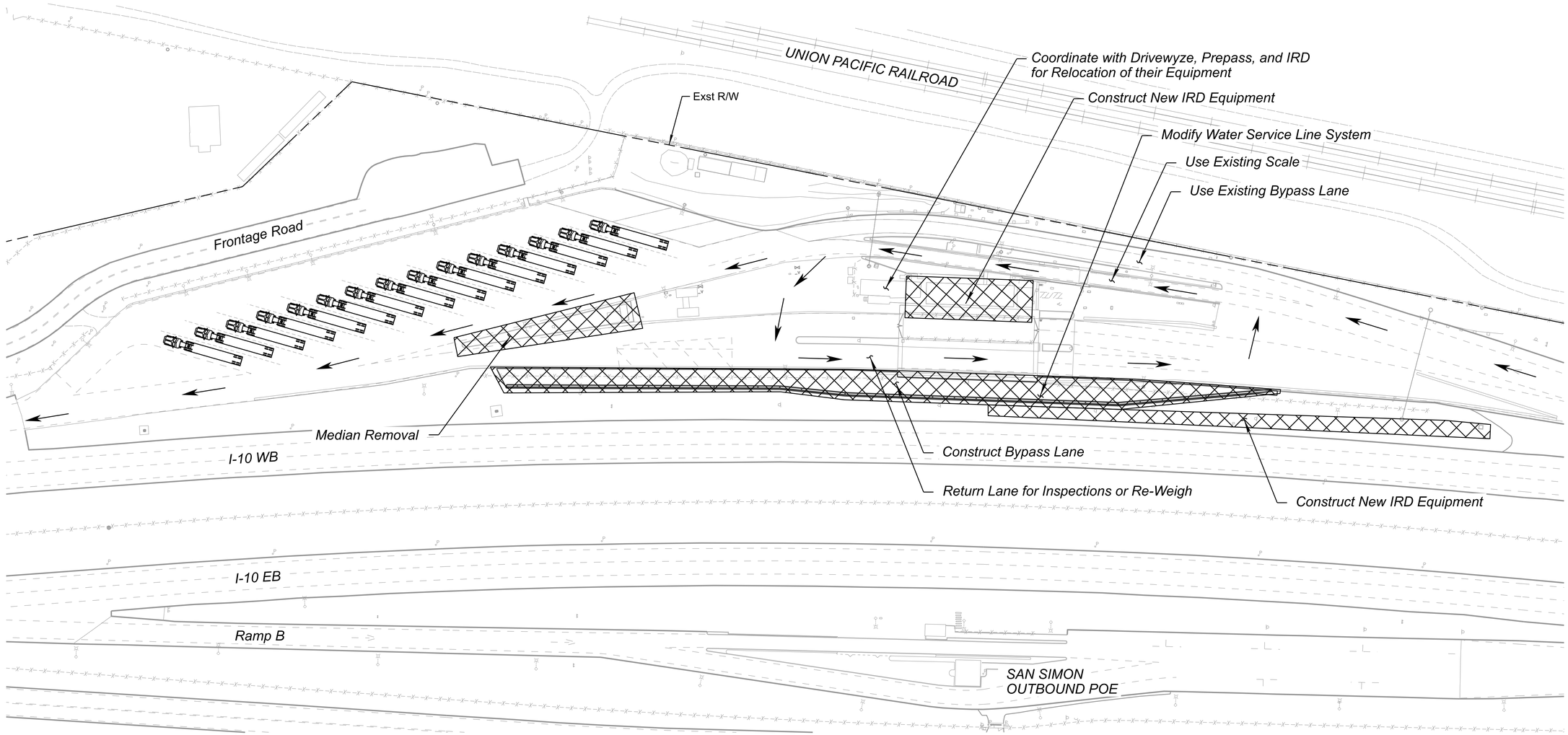

Registered Professional Engineer (Civil)
CERTIFICATE NO. 80518
RACHEL GRANO
Date: 7/14/2026

	NAME	DATE
DESIGN	RRG	08/26
DRAWN	EG	08/26
CHECKED	RRG	08/26

Kimley»Horn

© 2026 KIMLEY-HORN AND ASSOCIATES, INC.

ARIZONA DEPARTMENT OF TRANSPORTATION
PROJECT DELIVERY AND OPERATIONS DIVISION
PROJECT MANAGEMENT GROUP

SAN SIMON POE
CONSTRUCTION PHASING
PHASE 1

ROUTE I-10
MILEPOST
STRUCTURE NO.

F.H.W.A. Arizona Division	STATE	PROJECT NO.	FEDERAL ID NO.	SHEET NO.	TOTAL SHEETS	RECORD DRAWING
	ARIZ.	010 CH 383	010-F(238)T	40	200	

LOCATION: SAN SIMON PORT OF ENTRY (POE)

DWG NO. T-02.01

TRACS NO. F0728 01C

___ OF ___

8:13:36 AM 8/14/2026 TJ.Bulhoes K:\PHX_Roadway\Worksets\ADOT_PROJECTS_2022R3_10.12_291728040-F0728-SAN SIMON POE\dgn\Traffic\f0728_cp01_sansimon.dgn

PHASE 2A CONSTRUCTION NOTES:

- Maintain vehicle access through the POE at all times during times of operations

LEGEND:

- *Truck Path*
- *Work Area*
- *Potential Staging Area*

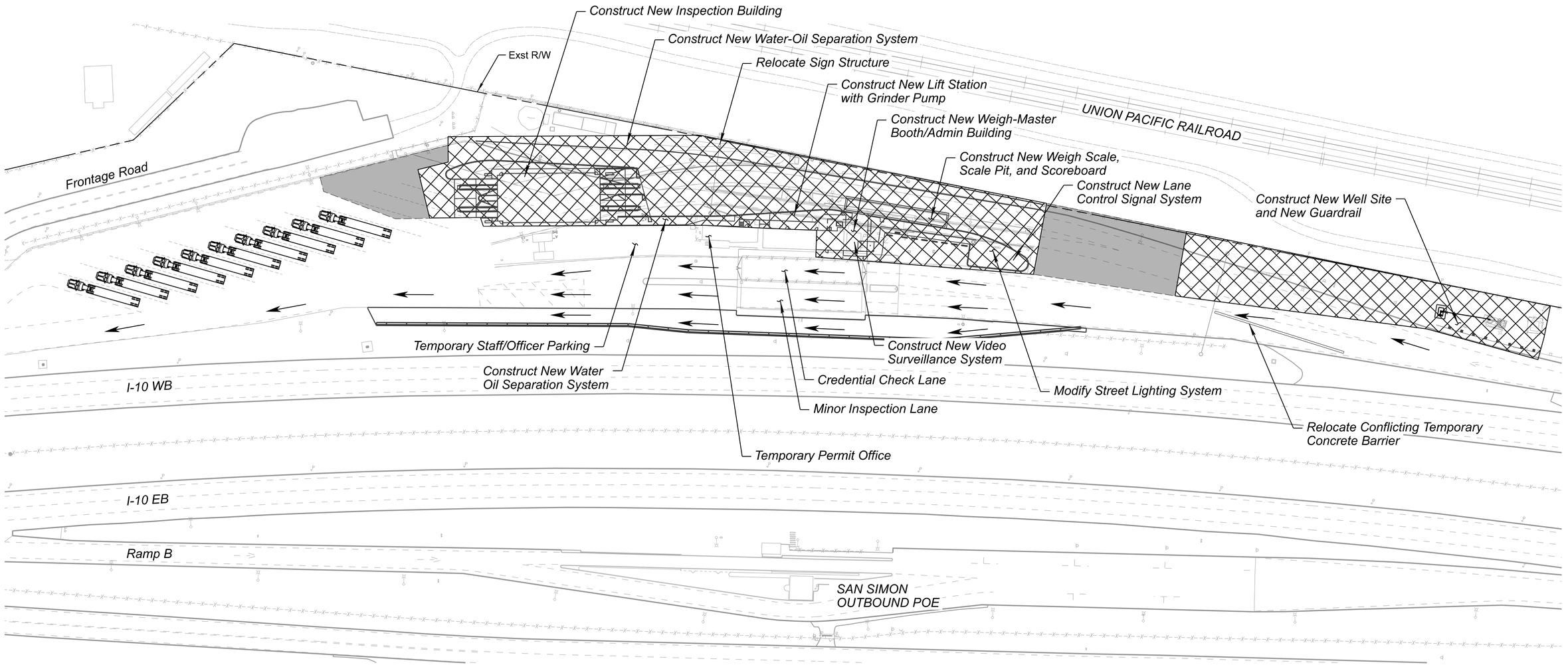

Registered Professional Engineer (Civil) CERTIFICATE NO. 80518 RACHEL GRANO Date Signed 7/14/2026

	NAME	DATE
DESIGN	RRG	08/26
DRAWN	EG	08/26
CHECKED	RRG	08/26

Kimley»Horn

© 2026 KIMLEY-HORN AND ASSOCIATES, INC.

ARIZONA DEPARTMENT OF TRANSPORTATION
PROJECT DELIVERY AND OPERATIONS DIVISION
PROJECT MANAGEMENT GROUP

SAN SIMON POE
CONSTRUCTION PHASING
PHASE 2A

ROUTE I-10
MILEPOST
STRUCTURE NO.

F.H.W.A. Arizona Division	STATE	PROJECT NO.	FEDERAL ID NO.	SHEET NO.	TOTAL SHEETS	RECORD DRAWING
	ARIZ.	010 CH 383	010-F(238)T	41	200	

LOCATION SAN SIMON PORT OF ENTRY (POE)

DWG NO. T-02.02

TRACS NO. F0728 01C

___ OF ___

8:13:58 AM 8/14/2026 TJ.Bulhoes K:\PHX_Roadway\Worksets\ADOT_PROJECTS_2022R3_10.12_291728040-F0728-SAN SIMON POE\dgn\Traffic\f0728_cp02_sansimon.dgn

PHASE 2B CONSTRUCTION NOTES:

- Maintain vehicle access through the POE at all times during times of operations

LEGEND:

- Truck Path
- Work Area
- Potential Staging Area

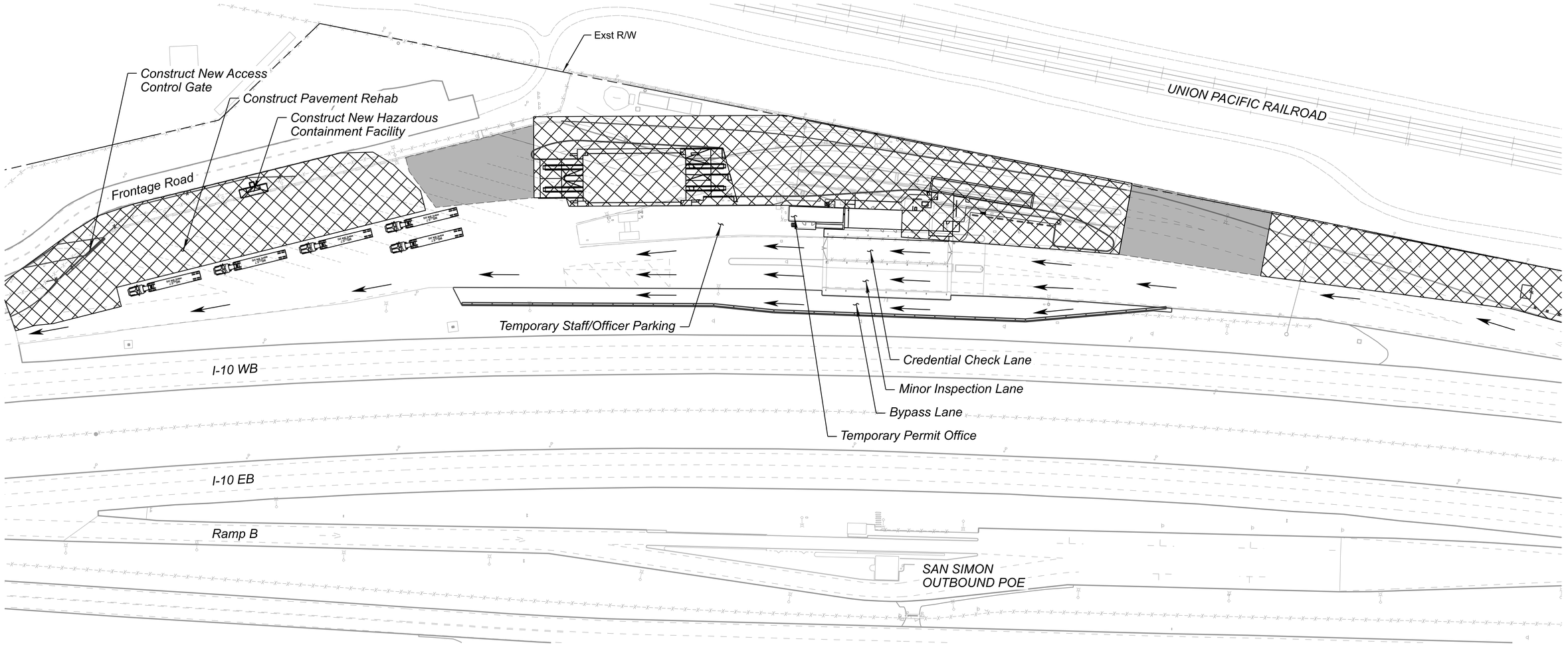

Registered Professional Engineer (Civil) CERTIFICATE NO. 80518 RACHEL GRANO Date: 7/14/2026

	NAME	DATE
DESIGN	RRG	08/26
DRAWN	EG	08/26
CHECKED	RRG	08/26

Kimley»Horn

© 2026 KIMLEY-HORN AND ASSOCIATES, INC.

ARIZONA DEPARTMENT OF TRANSPORTATION
PROJECT DELIVERY AND OPERATIONS DIVISION
PROJECT MANAGEMENT GROUP

SAN SIMON POE
CONSTRUCTION PHASING
PHASE 2B

ROUTE I-10
MILEPOST
STRUCTURE NO.

F.H.W.A. Arizona Division	STATE	PROJECT NO.	FEDERAL ID NO.	SHEET NO.	TOTAL SHEETS	RECORD DRAWING
	ARIZ.	010 CH 383	010-F(238)T	42	200	

LOCATION SAN SIMON PORT OF ENTRY (POE)

DWG NO. T-02.03

TRACS NO. F0728 01C

___ OF ___

8:14:21 AM 8/14/2026 TJ.Bulhoes K:\PHX_Roadway\Worksets\ADOT_PROJECTS_2022R3_10.12_291728040-F0728-SAN SIMON POE\dgn\Traffic\f0728_cp02b_sansimon.dgn

PHASE 3 CONSTRUCTION NOTES:

- Maintain vehicle access through the POE at all times during times of operations

LEGEND:

Truck Path

Work Area

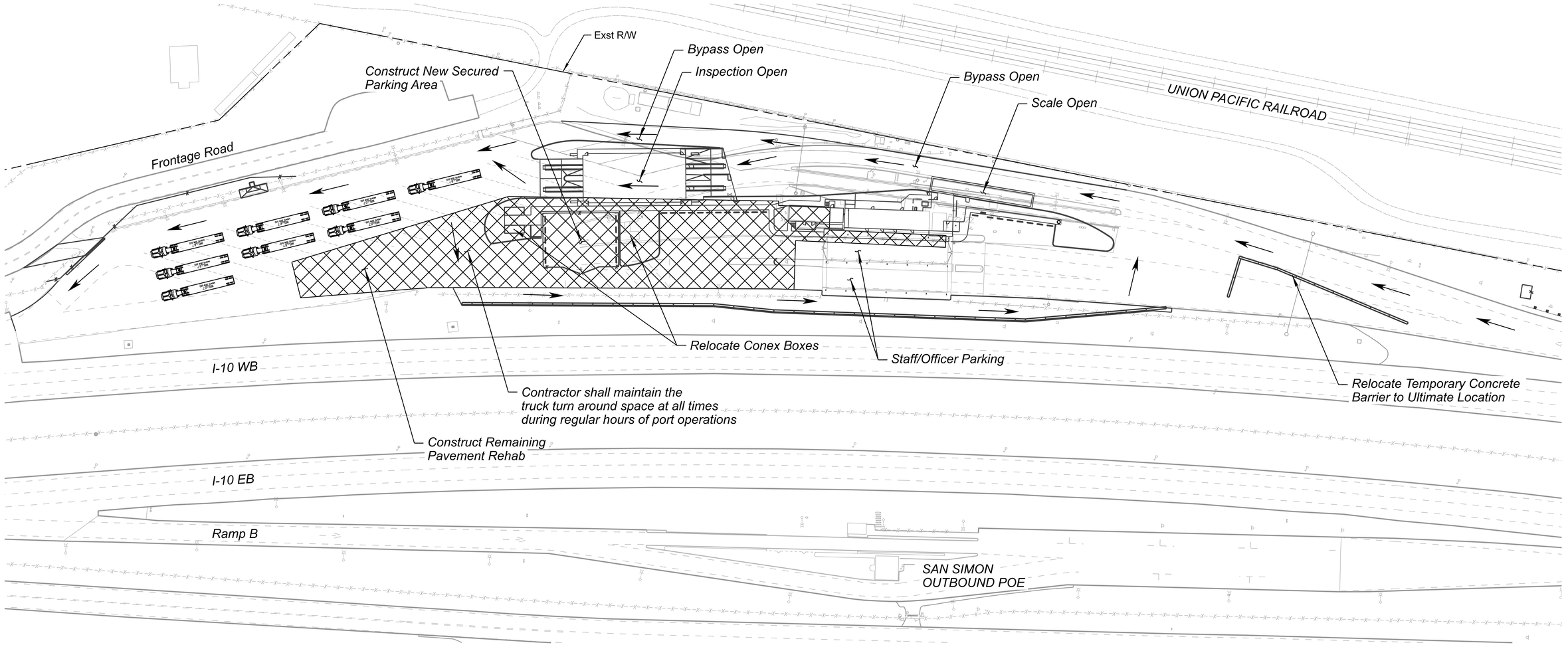

Registered Professional Engineer (Civil) CERTIFICATE NO. 80518 RACHEL GRANO Date: 7/14/2026

	NAME	DATE
DESIGN	RRG	08/26
DRAWN	EG	08/26
CHECKED	RRG	08/26

Kimley»Horn

© 2026 KIMLEY-HORN AND ASSOCIATES, INC.

ARIZONA DEPARTMENT OF TRANSPORTATION
PROJECT DELIVERY AND OPERATIONS DIVISION
PROJECT MANAGEMENT GROUP

SAN SIMON POE
CONSTRUCTION PHASING
PHASE 3

ROUTE	F.H.W.A. Arizona Division	STATE	PROJECT NO.	FEDERAL ID NO.	SHEET NO.	TOTAL SHEETS	RECORD DRAWING
I-10		ARIZ.	010 CH 383	010-F(238)T	43	200	
MILEPOST	LOCATION	SAN SIMON PORT OF ENTRY (POE)					DWG NO. T-02.04
STRUCTURE NO.	TRACS NO. F0728 01C						___ OF ___

8:14:41 AM 8/14/2026 TJ.Bulhoes K:\PHX_Roadway\Worksets\ADOT_PROJECTS_2022R3_10.12_291728040-F0728-SAN SIMON POE\dgn\Traffic\f0728_cp03_sansimon.dgn

SIGNING GENERAL NOTES:

1. *All signs shall be in compliance with the Manual on Uniform Traffic Control Devices (MUTCD), and the ADOT Signing and Marking Standards Drawings, and the Traffic Engineering Manual of Approved Signs.*
2. *The sign locations and the post lengths are approximate. The contractor shall verify the sign locations and actual post lengths with the Engineer prior to constructing the foundations for the sign supports.*
3. *The bottom of each sign shall be at least 7 feet above the nearest edge of pavement and at least 7 feet above the ground under the sign.*
4. *Offsets for all signs shall be measured from the centerline of the new project to the nearest edge of the sign.*
5. *All new signs shall be fabricated of extruded aluminum sign panels or flat sheet aluminum (as indicated in the sign summary) with direct applied copy or screen printed legend as indicated in Section 608 of the specifications and Section 380 of the ADOT Traffic Engineering Guidelines and Processes.*
6. *The Engineer may modify the signing plans.*
7. *The contractor shall preserve all roadway signs, sign supports, object markers, and milepost markers. The contractor shall replace any signs, sign supports or markers damaged as a result of the construction at no additional cost to the Department.*
8. *The retro-reflective sheeting on all new signs shall meet criteria established in Section 1007 of the specifications.*
9. *Shop drawings will be required as for all guide signs.*
10. *The contractor shall remove existing signing where indicated in the sign summary.*
11. *The contractor shall inventory all signs to be removed or covered and note damaged signs to the Engineer at the time of covering or removal. All signs damaged by covering or removal due to contractor's operations shall be replaced by the contractor at no additional cost to the Department.*
12. *Where indicated on the sign summary, new slip bases shall be installed as indicated on Std. Dwg. S-3.*
13. *All bolts used to install signing shall have hex heads, not slotted heads, and shall not be painted.*
14. *Upon installation of each furnished sign, the contractor shall place information on the back of the sign as shown on the sign identification details in ADOT Std. Dwg. S-13.*
15. *The contractor shall adjust location of signage foundations per AZ811 and as approved by the Engineer.*
16. *The contractor shall be responsible for securing all underground utility locations where foundations are installed. Special care needs to be taken to insure that all underground utilities are avoided. Utility locations are not shown on the signing plans.*
17. *Where signs are being removed or replaced, the foundations shall be removed entirely or the foundations shall be removed a minimum of 2 feet below finished grade, as directed by the Engineer.*
18. *All removed signs, structures, and materials shall be the property of the contractor when indicated as being removed, and not relocated, on the sign summaries and plans.*

APPROXIMATE SIGNING QUANTITIES

BID ITEM NUMBER	ITEM DESCRIPTION	UNIT	TOTAL QUANTITY
2020155	Remove (Signs)	EACH	12
6060076	Foundation For Bridge Sign Structure (SD9.20, Type 2F)	EACH	2
6060301	Relocate Existing Bridge Sign Structure	L. SUM	1
6070038	Slip Base	EACH	15
6070048	Foundation for Square Tube Post	EACH	16
6070054	Sign Post (Perforated) (2 S)	L. FT.	11
6070057	Sign Post (Perforated) (2 1/2 T)	L. FT.	188
6080005	Regulatory, Warning, or Marker Sign Panel	SQ. FT.	80
6080018	Extruded Aluminum Sign Panel	SQ. FT.	203
6080025	Flat Sheet Aluminum Sign Panel	SQ. FT.	42
6080105	Relocate Signs	L. SUM	1

STATE OF ARIZONA — Registered Professional Engineer — CERTIFICATE NO. 42636 — CHRISTOPHER B. WILLIAMS — 9-30-26 — Date Signed — ARIZONA, U.S.A.

	NAME	DATE
DESIGN	C. MCALINDEN	09/26
DRAWN	C. MCALINDEN	09/26
CHECKED	C. WILLIAMS	09/26

Y2K ENGINEERING
1921 S. Alma School Rd, Suite 204
Mesa, Arizona 85210
www.y2keng.com

ARIZONA DEPARTMENT OF TRANSPORTATION
PROJECT DELIVERY AND OPERATIONS DIVISION
TRAFFIC DESIGN SECTION

SAN SIMON POE
SIGNING AND GENERAL NOTES
AND QUANTITIES

ROUTE	STATE	PROJECT NO.	FEDERAL ID NO.	SHEET NO.	TOTAL SHEETS	RECORD DRAWING
I-10	ARIZ.	010 CH 383	010-F(238)T	44	186	

MILEPOST

STRUCTURE NO.

F.H.W.A. Arizona Division

LOCATION SAN SIMON PORT OF ENTRY (POE)

DWG No. T-03.01

TRACS NO. F0728 01C

____ OF____

Plan Sheet No.	Sign Location	MOAS Sign Code	Work						Offset (ft)	Mounting Height (ft)	Background Color	Panel					Bid Item Number	Ground Mounted						Overhead		Remarks
			New	Existing								Legend	Width (in)	Height (in)	Area (sq ft)	Type		Foundations	Post		New Slipbases	Stringer		Structure Type	No. of Lights	
				Replace Panel	Relocate Panel	Modify Legend	Remove	To Remain											Type	Total Length (ft)		Type	Total Length (ft)			
47	19+79.0	R1-1	X						17	7	RD	STOP	36	36	9.0	RWM	6080005	1	2 1/2 T	12	1					
47	19+93.6	R1-1					X				RD	STOP														
47	20+52.7	R5-11	X						27	7	WH	AUTHORIZED VEHICLES ONLY	30	24	5.0	RWM	6080005									MOUNT ON GATE
47	23+93.7	W11-2	X						68	7	YL	PEDESTRIAN	36	36	9.0	RWM	6080005	1	2 1/2 T	14	1					
		W16-7pL	X								YL	DIAGONAL DOWNWARD ARROW	24	12	2.0	RWM	6080005									
47	24+61.9	W11-2	X						58	7	YL	PEDESTRIAN	36	36	9.0	RWM	6080005	1	2 1/2 T	14	1					
	+	W16-7pR	X								YL	DIAGONAL DOWNWARD ARROW	24	12	2.0	RWM	6080005									
47	24+69.8	W4-1L					X				YL	MERGE														
47	25+21.8	GUIDE	X						66	7	GR	EXIT / REWEIGH	60	36	15.0	FDA	6080025	2	2 1/2 T	25	2					
47	27+49.3	W4-1L					X				YL	MERGE														
47	27+58.3	W11-2					X				YL	PEDESTRIAN														
47	27+58.3	W11-2					X				YL	PEDESTRIAN														
47	27+58.3	GUIDE					X				GR	HAVE READY: TRUCK REGISTRATION														
47	27+58.3	GUIDE					X				GR	OBTAIN ARIZONA PERMIT														
47	28+12.5	M3-4	X						41	7	BL	WEST	24	12	2.0	RWM	6080005	1	2 1/2 T	14	1					
	+	M1-1	X								BL	I-10	24	24	4.0	RWM	6080005									
	+	M6-3	X								BL	UP ARROW	24	18	3.0	RWM	6080005									
47	28+12.5	GUIDE	X								GR	INSPECTION / LANE 1 / LANE 2	216	72	108.0	EXT	6080018									MOUNT ON RELOCATED SIGN STRUCTURE
47	28+12.5	GUIDE	X								GR	PERMIT PARKING / REWEIGH	228	60	95.0	EXT	6080018									MOUNT ON RELOCATED SIGN STRUCTURE
47	28+12.5	W11-2	X								YL	PEDESTRIAN	36	36	9.0	RWM	6080005									MOUNT ON RELOCATED SIGN STRUCTURE POLE
47	28+12.5	W11-2	X								YL	PEDESTRIAN	36	36	9.0	RWM	6080005									MOUNT ON RELOCATED SIGN STRUCTURE POLE
47	28+76.0	R1-1					X				RD	STOP														
47	29+48.3	R7-8AZ	X						17	7	WH	RESERVED PARKING	12	18	1.5	RWM	6080005	1	2 1/2 T	12	1					
47	29+54.1	OM2-1H						X			YL	OBJECT MARKER														

SIGN LOCATION
NB: Northbound
SB: Southbound
RS: Right-Side of Travel Lane
LS: Left-Side of Travel Lane

BACKGROUND COLORS:
RD = Red
BK = Black
BL = Blue
GR = Green
YL = Yellow
BR = Brown
WH = White
OR = Orange

PANEL TYPES:
RWM: Regulatory, Warning, or Marker
F-DA: Flat-sheet aluminum with direct applied or silk-screened characters
F-DEM: Flat-sheet aluminum with demountable characters
EXT: Aluminum extrusions
INCR: Aluminum sheet increment

POST TYPES:
2S: 2" Single Preforated
2 1/2S: 2 1/2" Single Preforated
2T: 2" Telescoping
2 1/2T: 2 1/2" Telescoping
S4x7.7: Breakaway
W6x9: Breakaway
W8x18: Breakaway
W10x22: Breakaway

STRINGER TYPES:
P: Square-tube post
T: T-section (WT 3x6)

NOTES:
1. The Engineer shall verify post lengths and elevations.
2. The Engineer may shift signs to achieve a more desirable location.
3. Quantities are approximate and/or contractor's information only.
4. Shop drawings will be required.
5. The Engineer may modify the signing plans.

STATE OF ARIZONA REGISTERED 42636 CHRISTOPHER B. WILLIAMS 9-30-26 Date Signed ARIZONA, U.S.A.

	NAME	DATE
DESIGN	C. MCALINDEN	09/26
DRAWN	C. MCALINDEN	09/26
CHECKED	C. WILLIAMS	09/26

Y2K ENGINEERING
1921 S. Alma School Rd, Suite 204
Mesa, Arizona 85210
www.y2keng.com

ARIZONA DEPARTMENT OF TRANSPORTATION
PROJECT DELIVERY AND OPERATIONS DIVISION
TRAFFIC DESIGN SECTION

SAN SIMON POE
SIGN SUMMARY

ROUTE	F.H.W.A. Arizona Division	STATE	PROJECT NO.	FEDERAL ID NO.	SHEET NO.	TOTAL SHEETS	RECORD DRAWING
I-10		ARIZ.	010 CH 383	010-F(238)T	45	186	
MILEPOST	LOCATION SAN SIMON PORT OF ENTRY (POE)						DWG No. T-03.02
STRUCTURE NO.	TRACS NO. F0728 01C						____ OF____

Plan Sheet No.	Sign Location	MOAS Sign Code	Work						Offset (ft)	Mounting Height (ft)	Background Color	Panel					Bid Item Number	Ground Mounted						Overhead		Remarks
			New	Existing								Legend	Width (in)	Height (in)	Area (sq ft)	Type		Foundations	Post		New Slipbases	Stringer		Structure Type	No. of Lights	
				Replace Panel	Relocate Panel	Modify Legend	Remove	To Remain											Type	Total Length (ft)		Type	Total Length (ft)			
47	30+20.7	SPECIAL			X				29	7	WH	PASSENGERS / DO NOT EXIT / ON SCALES					6080105	1	2 1/2 T	12	1					MOVE SIGN TO RIGHT SHOULDER OF ROADWAY
47	30+31.9	GUIDE	X						16		WH	STOP AT SCALE	72	18	9.0	FDA	6080025	2	2 1/2 T	24	2					
47	30+72.5	SPECIAL					X				WH	VEHICLES OVER 13 FT WIDE														
47	30+73.4	SPECIAL					X				WH	VEHICLES OVER 13 FT WIDE														
47	30+75.0	SPECIAL			X				31	7	WH	ADOT ENFORCEMENT & COMPLIANCE POE					6080105	2	2 1/2 T	24	2					MOVE TO NEW MEDIAN NOSE
	+	R3-2	X								WH	NO LEFT TURN	24	24	4.0	RWM	6080005									
47	30+76.0	R2-1(5)					X				WH	SPEED LIMIT 5														
47	30+78.8	R2-1(5)					X				WH	SPEED LIMIT 5														
47	31+30.0	R2-1(15)	X						26	7	WH	SPEED LIMIT 15	30	36	7.5	RWM	6080005	1	2 1/2 T	12	1					
47	32+03.1	R3-2	X						13	7	GR	NO LEFT TURN	24	24	4.0	RWM	6080005	1	2 S	11						
47	32+11.2	GUIDE	X						24	7	GR	INSPECTION / PERMITS / PARKING	72	36	18.0	FDA	6080025	2	2 1/2 T	25	2					
47	32+71.3	R5-1						X			WH	DO NOT ENTER														
	+	R5-1a						X			RD	WRONG WAY														
47	32+77.7	R5-1						X			WH	DO NOT ENTER														
	+	R5-1a						X			RD	WRONG WAY														
47	33+71.4	R8-3						X			WH	NO PARKING														
	+	M6-1R						x			WH	RIGHT ARROW														
47	33+81.4	SPECIAL						X			WH	ALL COMMERCIAL VEHICLES HAULING														
48	34+44.9	R8-3						X			WH	NO PARKING														
48	35+20.0	R8-3						X			WH	NO PARKING														
	+	M6-1L						X			WH	LEFT ARROW														
48	35+55.7	R5-1a						X			RD	WRONG WAY														
48	35+58.5	R5-1a						X			RD	WRONG WAY														
48	40+48.1	W3-4						X			YL	BE PREPARED TO STOP														

SIGN LOCATION
NB: Northbound
SB: Southbound
RS: Right-Side of Travel Lane
LS: Left-Side of Travel Lane

BACKGROUND COLORS:
RD = Red
BK = Black
BL = Blue
GR = Green
YL = Yellow
BR = Brown
WH = White
OR = Orange

PANEL TYPES:
RWM: Regulatory, Warning, or Marker
F-DA: Flat-sheet aluminum with direct applied or silk-screened characters
F-DEM: Flat-sheet aluminum with demountable characters
EXT: Aluminum extrusions
INCR: Aluminum sheet increment

POST TYPES:
2S: 2" Single Preforated
2 1/2S: 2 1/2" Single Preforated
2T: 2" Telescoping
2 1/2T: 2 1/2" Telescoping
S4x7.7: Breakaway
W6x9: Breakaway
W8x18: Breakaway
W10x22: Breakaway

STRINGER TYPES:
P: Square-tube post
T: T-section (WT 3x6)

NOTES:
1. The Engineer shall verify post lengths and elevations.
2. The Engineer may shift signs to achieve a more desirable location.
3. Quantities are approximate and/or contractor's information only.
4. Shop drawings will be required.
5. The Engineer may modify the signing plans.

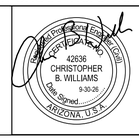

	NAME	DATE
DESIGN	C. MCALINDEN	09/26
DRAWN	C. MCALINDEN	09/26
CHECKED	C. WILLIAMS	09/26

Y2K ENGINEERING
1921 S. Alma School Rd, Suite 204
Mesa, Arizona 85210
www.y2keng.com

ARIZONA DEPARTMENT OF TRANSPORTATION
PROJECT DELIVERY AND OPERATIONS DIVISION
TRAFFIC DESIGN SECTION

SAN SIMON POE
SIGN SUMMARY

ROUTE	F.H.W.A. Arizona Division	STATE	PROJECT NO.	FEDERAL ID NO.	SHEET NO.	TOTAL SHEETS	RECORD DRAWING
I-10		ARIZ.	010 CH 383	010-F(238)T	46	186	
MILEPOST	LOCATION SAN SIMON PORT OF ENTRY (POE)						DWG No. T-03.03
STRUCTURE NO.	TRACS NO. F0728 01C						____ OF____

STA 19+93.6
REMOVE
R1-1

STA 20+52.7
INSTALL NEW
R5-11
30"x24"

STA 19+79.0
INSTALL NEW
R1-1
36"x36"

STA 23+93.7
INSTALL NEW
W11-2
36"x36"
W16-7pL
24"x12"

STA 24+61.9
INSTALL NEW
W11-2
36"x36"
W16-7pR
24"x12"

STA 25+21.8
INSTALL NEW
GUIDE
60"x36"

STA 27+58.3
REMOVE
GUIDE

STA 27+58.3
REMOVE
W11-2

STA 28+12.5
NEW
M3-4
24"x12"
M1-1
24"x24"
M6-3
24"x18"

STA 28+12.5
NEW
GUIDE
SEE SHEETS T-03.06 AND T-03.07
FOR SIGN INFORMATION

STA 28+12.5
NEW
W11-2
36"x36"

STA 28+76.0
REMOVE
R1-1

STA 30+20.7
RELOCATE
(TO RIGHT
SHOULDER)
SPECIAL

STA 30+72.5
REMOVE
SPECIAL

STA 30+73.4
REMOVE
SPECIAL

STA 30+76.0
REMOVE
R2-1(5)

STA 31+11.2
INSTALL NEW
GUIDE
72"x36"

STA 31+30.0
INSTALL NEW
R2-1(15)
30"x36"

STA 32+71.3
TO REMAIN
R5-1
R5-1a

STA 33+71.4
TO REMAIN
R8-3
M6-1R

STA 33+81.4
TO REMAIN
SPECIAL

STA 24+69.8
REMOVE
W4-1L

STA 27+49.3
REMOVE
W4-1L

STA 28+12.5
RELOCATED EXISTING
SIGN STRUCTURE TO
NEW FOUNDATIONS

STA 29+48.3
INSTALL NEW
R7-8AZ
12"x18"

STA 29+54.1
TO REMAIN
OM2-1H

STA 30+31.9
NEW
R8-3
72"x18"

STA 30+78.8
REMOVE
R2-1(5)

STA 30+75.0
INSTALL NEW
R3-2
24"x24"

STA 30+75.0
RELOCATE
(TO NEW
MEDIAN NOSE)
SPECIAL

STA 32+03.1
INSTALL NEW
R3-2
24"x24"

STA 32+77.7
TO REMAIN
R5-1
R5-1a

WB I-10

EB I-10

MATCH LINE STA 34+00

N

	NAME	DATE
DESIGN	C. MCALINDEN	09/26
DRAWN	C. MCALINDEN	09/26
CHECKED	C. WILLIAMS	09/26

42636
CHRISTOPHER
B. WILLIAMS
9-30-26
Date Signed
ARIZONA, U.S.A.

Y2K ENGINEERING
1921 S. Alma School Rd. Suite 204
Mesa, Arizona 85210
www.y2keng.com

ARIZONA DEPARTMENT OF TRANSPORTATION
PROJECT DELIVERY AND OPERATIONS DIVISION
TRAFFIC DESIGN SECTION

SAN SIMON POE
SIGNING PLANS
STA 19+00 TO STA 34+00

ROUTE	F.H.W.A. Arizona Division	STATE	PROJECT NO.	FEDERAL ID NO.	SHEET NO.	TOTAL SHEETS	RECORD DRAWING
I-10		ARIZ.	010 CH 383	010-F(238)T	47	186	
MILEPOST	LOCATION SAN SIMON PORT OF ENTRY (POE)					DWG No.	T-03.04
STRUCTURE NO.	TRACS NO. F0728 01C					____ OF ____	

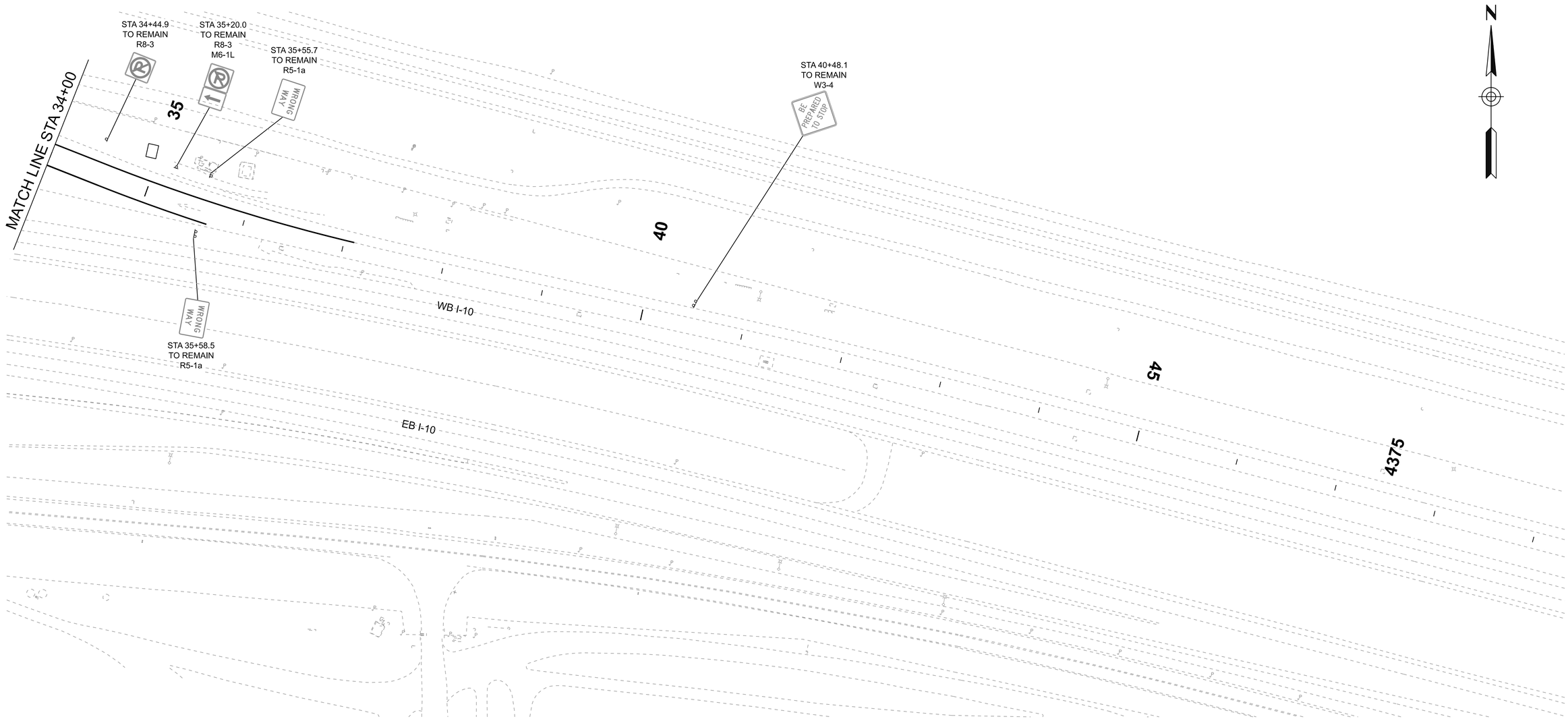

	NAME	DATE
DESIGN	C. MCALINDEN	09/26
DRAWN	C. MCALINDEN	09/26
CHECKED	C. WILLIAMS	09/26

Registered Professional Engineer (Civil)
42636
CHRISTOPHER B. WILLIAMS
9-30-26
Date Signed
ARIZONA, U.S.A.

Y2K ENGINEERING
1921 S. Alma School Rd, Suite 204
Mesa, Arizona 85210
www.y2keng.com

ARIZONA DEPARTMENT OF TRANSPORTATION
PROJECT DELIVERY AND OPERATIONS DIVISION
TRAFFIC DESIGN SECTION

SAN SIMON POE
SIGNING PLANS
STA 34+00 TO STA 49+00

ROUTE I-10
MILEPOST
STRUCTURE NO.

F.H.W.A. Arizona Division

STATE	PROJECT NO.	FEDERAL ID NO.	SHEET NO.	TOTAL SHEETS	RECORD DRAWING
ARIZ.	010 CH 383	010-F(238)T	48	186	

LOCATION SAN SIMON PORT OF ENTRY (POE)

DWG No. T-03.05

TRACS NO. F0728 01C

____ OF____

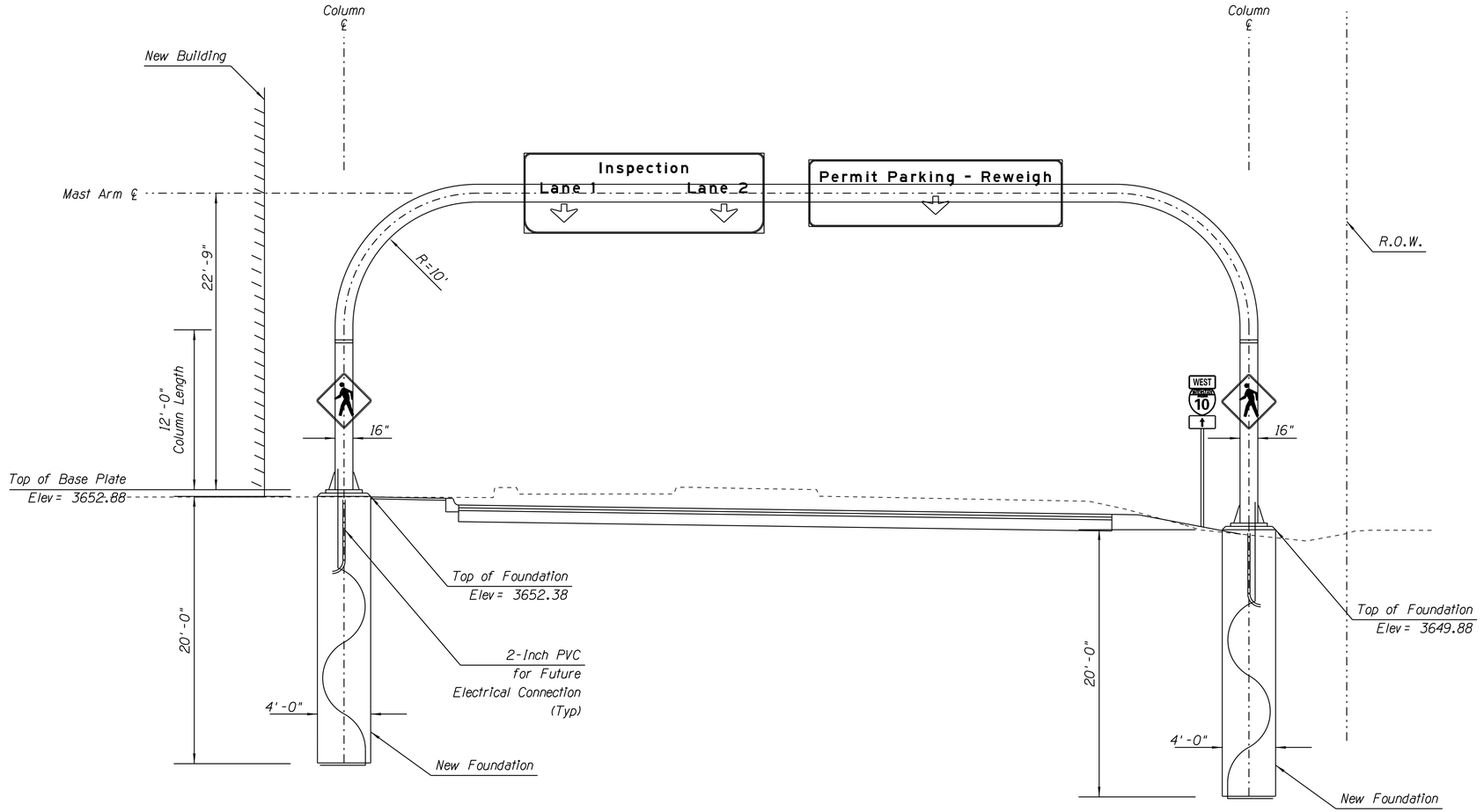

RELOCATED SIGN STRUCTURE SECTION
STA 28+12.48

NOTE:
FOUNDATION LOCATIONS SHALL BE FIELD SURVEYED AND APPROVED BY THE ENGINEER BEFORE CONSTRUCTION.

	NAME	DATE
DESIGN	C. MCALINDEN	09/26
DRAWN	C. MCALINDEN	09/26
CHECKED	C. WILLIAMS	09/26

42636 CHRISTOPHER B. WILLIAMS 9-30-26 Date Signed ARIZONA, U.S.A. Registered Professional Engineer

Y2K ENGINEERING
1921 S. Alma School Rd, Suite 204
Mesa, Arizona 85210
www.y2keng.com

ARIZONA DEPARTMENT OF TRANSPORTATION
PROJECT DELIVERY AND OPERATIONS DIVISION
TRAFFIC DESIGN SECTION

SAN SIMON POE
SIGN STRUCTURE DETAIL

ROUTE	F.H.W.A. Arizona Division	STATE	PROJECT NO.	FEDERAL ID NO.	SHEET NO.	TOTAL SHEETS	RECORD DRAWING
I-10		ARIZ.	010 CH 383	010-F(238)T	49	186	
MILEPOST	LOCATION SAN SIMON PORT OF ENTRY (POE)						DWG No. T-03.06
STRUCTURE NO.	TRACS NO. F0728 01C						____ OF____

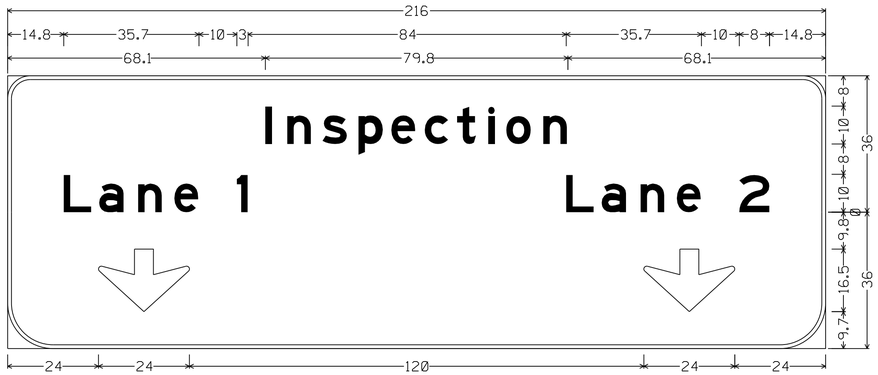

6.0" Radius, 1.0" Border, White on Green;
"Inspection", E; "Lane 1", E; "Lane 2", E;

12.0" Radius, 1.0" Border, White on Green;
Down Arrow 12" - 16.5" 270 33/64; Down Arrow 12" - 16.5" 270 33/64;

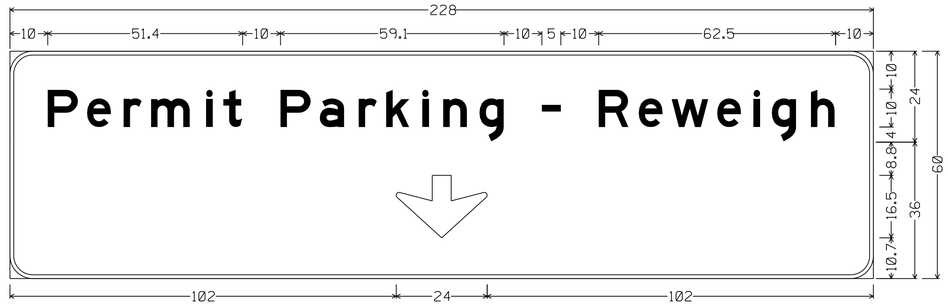

E6-101a (ramp-crossroad);

6.0" Radius, 1.0" Border, White on Green;
"Permit Parking - Reweigh", E;

6.0" Radius, 1.0" Border, White on Green;
Down Arrow 12" - 16.5" 270 33/64;

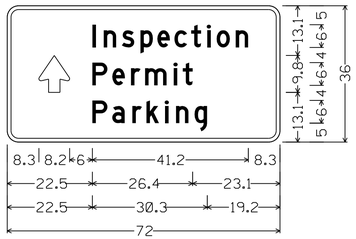

3.0" Radius, 1.0" Border, White on Green;
Arrow 6" Type D1 - 9.8" 90 33/64;
"Inspection", D; "Permit", D;
"Parking", D;

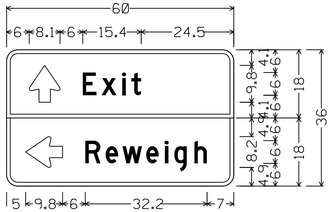

D1-2 (conventional road);

3.0" Radius, 1.0" Border, White on Green;
Arrow 6" Type D1 - 9.8" 90 33/64;
"Exit", D;

3.0" Radius, 1.0" Border, White on Green;
Arrow 6" Type D1 - 9.8" 180 33/64;
"Reweigh", D;



3.0" Radius, 1.0" Border, White on Green;
"Stop at Scale", D;

	NAME	DATE
DESIGN	C. MCALINDEN	09/26
DRAWN	C. MCALINDEN	09/26
CHECKED	C. WILLIAMS	09/26

Y2K ENGINEERING
1921 S. Alma School Rd, Suite 204
Mesa, Arizona 85210
www.y2keng.com

ARIZONA DEPARTMENT OF TRANSPORTATION
PROJECT DELIVERY AND OPERATIONS DIVISION
TRAFFIC DESIGN SECTION

SAN SIMON POE
SIGN FORMATS

ROUTE I-10
MILEPOST
STRUCTURE NO.

F.H.W.A. Arizona Division

STATE	PROJECT NO.	FEDERAL ID NO.	SHEET NO.	TOTAL SHEETS	RECORD DRAWING
ARIZ.	010 CH 383	010-F(238)T	50	186	

LOCATION SAN SIMON PORT OF ENTRY (POE)
DWG No. T-03.07
TRACS NO. F0728 01C
___ OF ___

CONNORMCALINDEN 8/14/2026 9:35:02 AM C:\Users\ConnorMcAlinden\Y2K Engineering\Project - Documents\2025-004-ADOT KHA San Simon\04_Working Docs\02_CADD\Xref\f0728_Trf_Plan_Bdr.dgn \ Model Name: ANSI D - Plan and Profile

PAVEMENT MARKING GENERAL NOTES

1. *Final striping shall be 90 mil (0.090 inches) thick alkyd extruded thermoplastic reflectorized striping placed over the existing striping, placed at a minimum of 30 calendar days after the initial striping. All other markings shall be applied at the same time.*

2. *At the completion of the final pavement surface each day, center lines, lane lines, edge lines and stop bars shall be striped with one application of standard reflectorized traffic paint at the locations of the permanent striping. The paint shall have a maximum thickness of 15 mils wet.*

3. *The contractor shall clean the roadway surface to the satisfaction of the Engineer, by sweeping and air-jet blowing, immediately prior to the placement of all pavement markings. The roadway surface shall be dry and the air and pavement temperatures shall be a minimum of 55 degree F and rising for the placement of thermoplastic striping.*

4. *Single arrow and freeway arrows, shall be installed in accordance with ADOT Standard Drawings.*

5. *All final stop bars, crosswalk lines, and pavement arrows shall be 90 mil (0.090 inch) thick, extruded thermoplastic reflectorized markings.*

6. *When stripe obliteration is necessary, it shall be accomplished by an approved method. Painting over striping, removal of pavement, and overlaying pavement do not constitute stripe obliteration.*

7. *In areas of new asphalt concrete pavement, the initial striping shall be Type-I paint.*

PAVEMENT MARKING QUANTITIES

BID ITEM NO.	ITEM DESCRIPTION	UNIT	QUANTITIES	QUANTITIES (4" EQUIV)
7015052	OBLITERATE PAVEMENT MARKING (STRIPE)	L.FT.		13,170
7040005	PAVEMENT MARKING (WHITE EXTRUDED THERMOPLASTIC) (0.090")	L.FT.		17,221
7040006	PAVEMENT MARKING (YELLOW EXTRUDED THERMOPLASTIC) (0.090")	L.FT.		980
7040072	PAVEMENT MARKING (TRANSVERSE) (THERMOPLASTIC) (ALKYD) (0.090")	L.FT.		545
7040073	PAVEMENT LEGEND (EXTRUDED THERMOPLASTIC) (ALKYD) (0.090")	EACH	2	
7040074	PAVEMENT SYMBOL (EXTRUDED THERMOPLASTIC) (ALKYD) (0.090")	EACH	14	
7042031	PRIMER-SEALER FOR PCCP THERMOPLASTIC STRIPING	L.FT.		11,240
7042036	PRIMER-SEALER FOR PCCP THERMOPLASTIC SYMBOL/LEGEND	EACH	15	
7042051	REMOVAL OF CURING COMPOUND FOR STRIPING	L.FT.		6,780
7042056	REMOVAL OF CURING COMPOUND FOR SYMBOL/LEGEND	EACH	4	
7080201	WATERBORNE-TYPE I PAVEMENT MARKING (PAINTED) (WHITE)	L.FT.	440	
7080202	WATERBORNE-TYPE I PAVEMENT MARKING (PAINTED) (YELLOW)	L.FT.	100	
7080204	WATERBORNE-TYPE I PAVEMENT MARKING (PAINTED SYMBOL)	EACH	1	

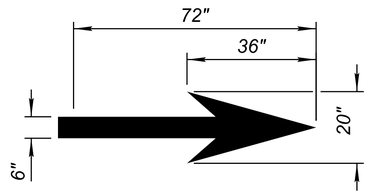

DETAIL A

Registered Professional Engineer (Civil)
CERTIFICATE NO.
80518
RACHEL
GRANO
Date 8/14/2026

	NAME	DATE
DESIGN	RRG	08/26
DRAWN	EG	08/26
CHECKED	RRG	08/26

Kimley»Horn
© 2026 KIMLEY-HORN AND ASSOCIATES, INC.

ARIZONA DEPARTMENT OF TRANSPORTATION
PROJECT DELIVERY AND OPERATIONS DIVISION
PROJECT MANAGEMENT GROUP

PAVEMENT MARKING GENERAL NOTES AND QUANTITIES

ROUTE I-10
MILEPOST
STRUCTURE NO.

F.H.W.A. Arizona Division	STATE	PROJECT NO.	FEDERAL ID NO.	SHEET NO.	TOTAL SHEETS	RECORD DRAWING
	ARIZ.	010 CH 383	010-F(238)T	51	200	

LOCATION SAN SIMON PORT OF ENTRY (POE)

DWG NO. T-04.01

TRACS NO. F0728 01C

___ OF___

8:14:56 AM 8/14/2026 TJ.Bulhoes K:\PHX_Roadway\Worksets\ADOT_PROJECTS_2022R3_10.12_291728040-F0728-SAN SIMON POE\dgn\Traffic\f0728_pmgn_sansimon.dgn

LEGEND:

Obliteration

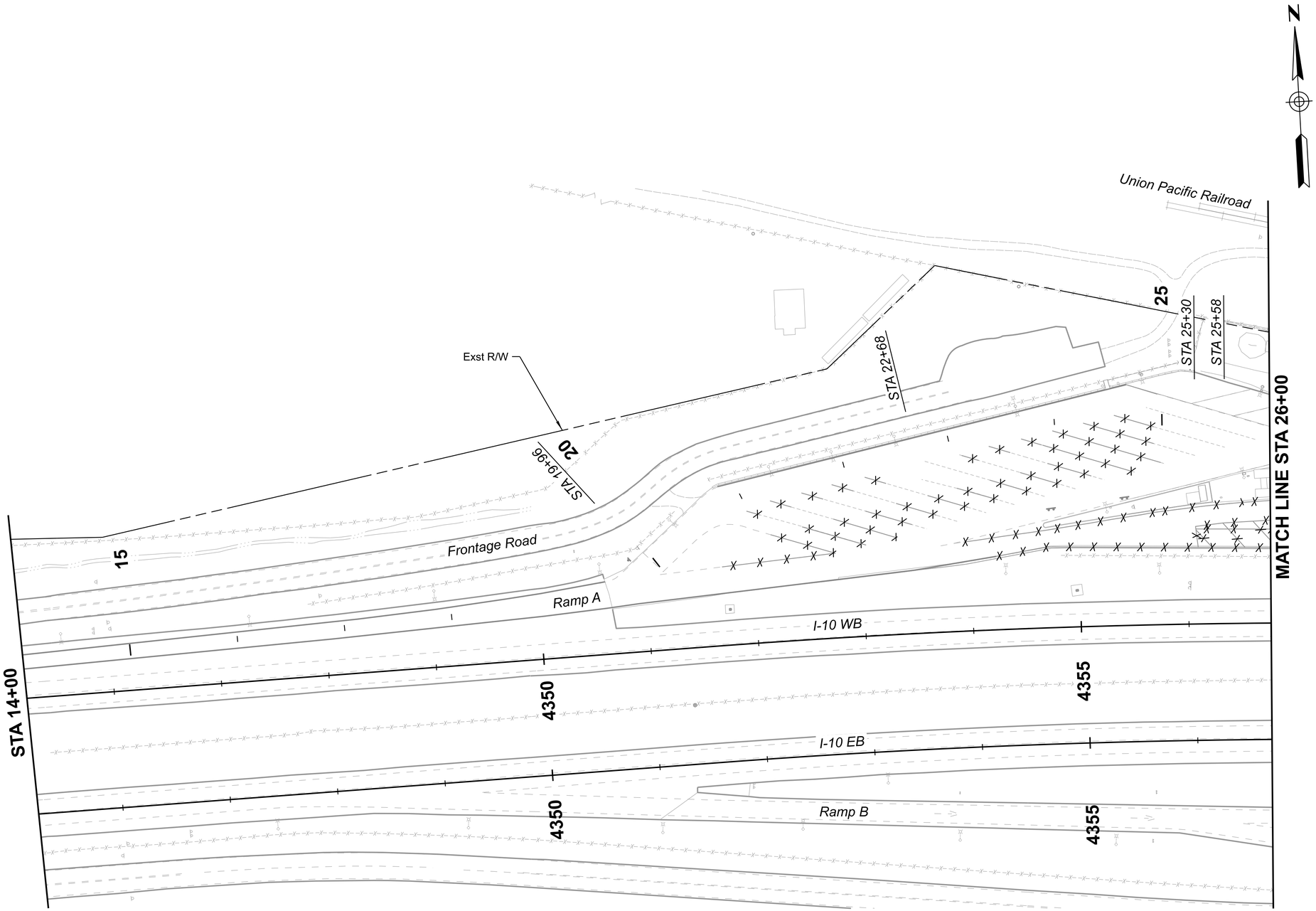

Registered Professional Engineer (Civil)
CERTIFICATE NO.
80518
RACHEL GRANO
Date Signed: 7/14/2026

	NAME	DATE
DESIGN	RRG	08/26
DRAWN	EG	08/26
CHECKED	RRG	08/26

Kimley»Horn

© 2026 KIMLEY-HORN AND ASSOCIATES, INC.

ARIZONA DEPARTMENT OF TRANSPORTATION
PROJECT DELIVERY AND OPERATIONS DIVISION
PROJECT MANAGEMENT GROUP

SAN SIMON POE
PAVEMENT MARKING REMOVAL SHEET
STA 14+00 TO STA 26+00

ROUTE I-10
MILEPOST
STRUCTURE NO.

F.H.W.A. Arizona Division

STATE	PROJECT NO.	FEDERAL ID NO.	SHEET NO.	TOTAL SHEETS	RECORD DRAWING
ARIZ.	010 CH 383	010-F(238)T	52	200	

LOCATION SAN SIMON PORT OF ENTRY (POE)

TRACS NO. F0728 01C

DWG NO. T-04.02

____ OF____

8:15:15 AM 8/14/2026 TJ.Bulhoes K:\PHX_Roadway\Worksets\ADOT_PROJECTS_2022R3_10.12_291728040-F0728-SAN SIMON POE\dgn\Traffic\f0728_rpm01_sansimon.dgn

LEGEND:

Obliteration

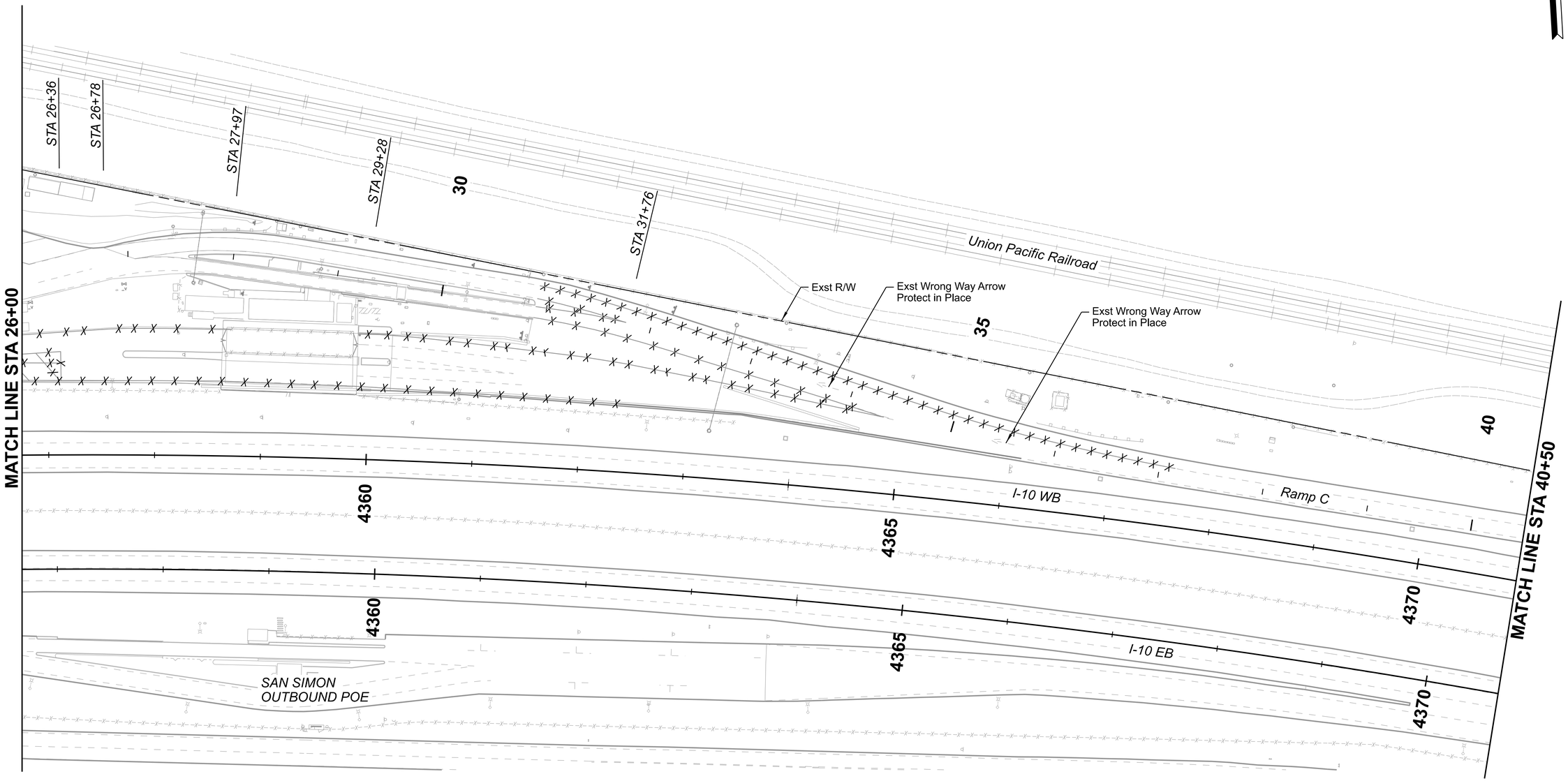

Registered Professional Engineer (Civil)
CERTIFICATE NO.
80518
RACHEL
GRANO
Date: 7/14/2026

	NAME	DATE
DESIGN	RRG	08/26
DRAWN	EG	08/26
CHECKED	RRG	08/26

Kimley»Horn

© 2026 KIMLEY-HORN AND ASSOCIATES, INC.

ARIZONA DEPARTMENT OF TRANSPORTATION
PROJECT DELIVERY AND OPERATIONS DIVISION
PROJECT MANAGEMENT GROUP

SAN SIMON POE
PAVEMENT MARKING REMOVAL SHEET
STA 26+00 STA 40+50

ROUTE I-10
MILEPOST
STRUCTURE NO.

F.H.W.A. Arizona Division	STATE	PROJECT NO.	FEDERAL ID NO.	SHEET NO.	TOTAL SHEETS	RECORD DRAWING
	ARIZ.	010 CH 383	010-F(238)T	53	200	

LOCATION SAN SIMON PORT OF ENTRY (POE)

DWG NO. T-04.03

TRACS NO. F0728 01C

___ OF ___

8:15:37 AM 8/14/2026 TJ.Bulhoes K:\PHX_Roadway\Worksets\ADOT_PROJECTS_2022R3_10.12_291728040-F0728-SAN SIMON POE\dgn\Traffic\f0728_rpm02_sansimon.dgn

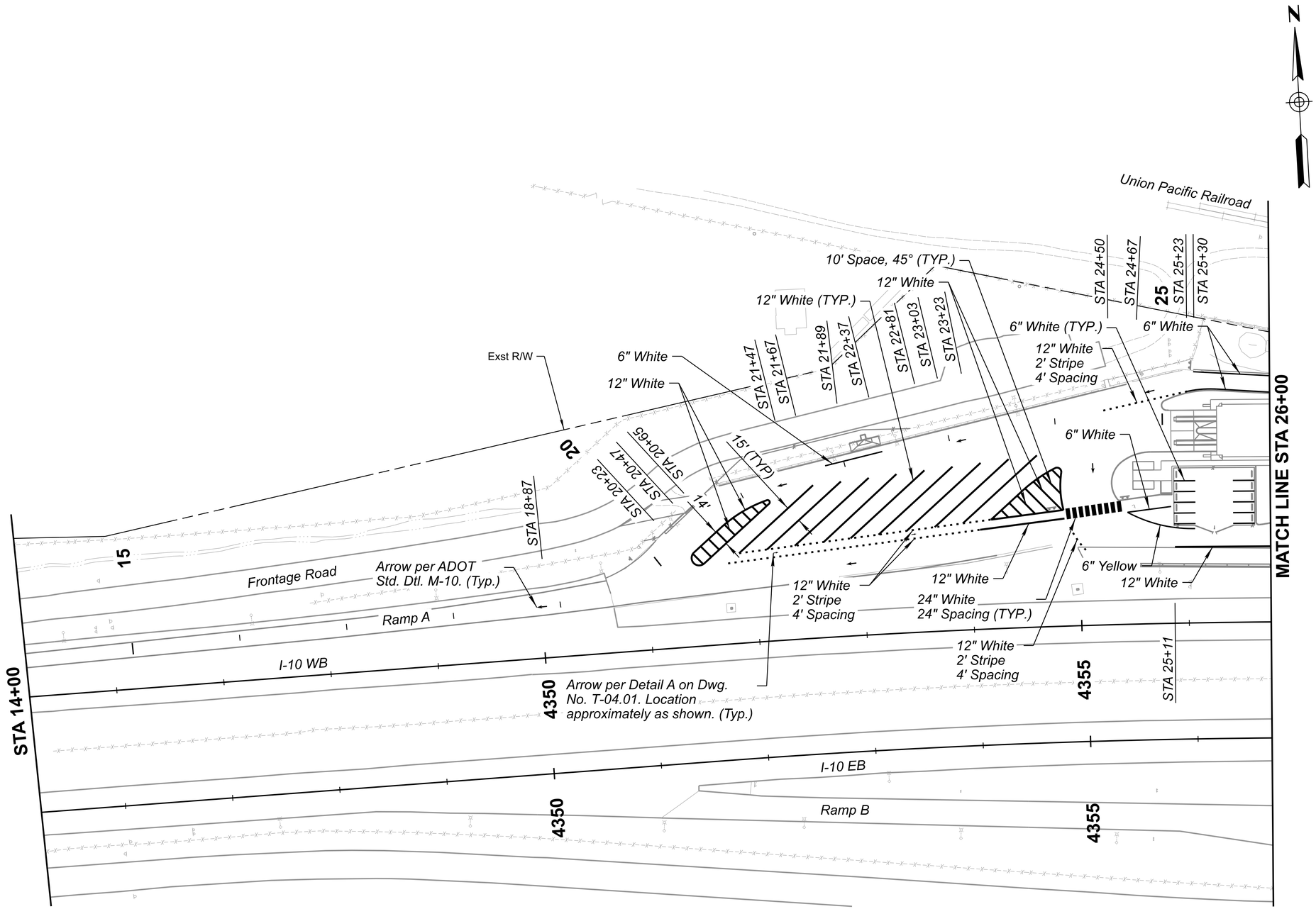

Registered Professional Engineer (Civil)
CERTIFICATE NO.
80518
RACHEL
GRANO
Date: 08/26/2026

	NAME	DATE
DESIGN	RRG	08/26
DRAWN	EG	08/26
CHECKED	RRG	08/26

Kimley»Horn

© 2026 KIMLEY-HORN AND ASSOCIATES, INC.

ARIZONA DEPARTMENT OF TRANSPORTATION
PROJECT DELIVERY AND OPERATIONS DIVISION
PROJECT MANAGEMENT GROUP

SAN SIMON POE
PAVEMENT MARKING SHEET
STA 14+00 TO STA 26+00

ROUTE I-10
MILEPOST
STRUCTURE NO.

F.H.W.A. Arizona Division

STATE	PROJECT NO.	FEDERAL ID NO.	SHEET NO.	TOTAL SHEETS	RECORD DRAWING
ARIZ.	010 CH 383	010-F(238)T	54	200	

LOCATION SAN SIMON PORT OF ENTRY (POE)

TRACS NO. F0728 01C

DWG NO. T-04.04

____ OF____

8:15:56 AM 8/14/2026 TJ.Bulhoes K:\PHX_Roadway\Worksets\ADOT_PROJECTS_2022R3_10.12_291728040-F0728-SAN SIMON POE\dgn\Traffic\f0728_pm01_sansimon.dgn

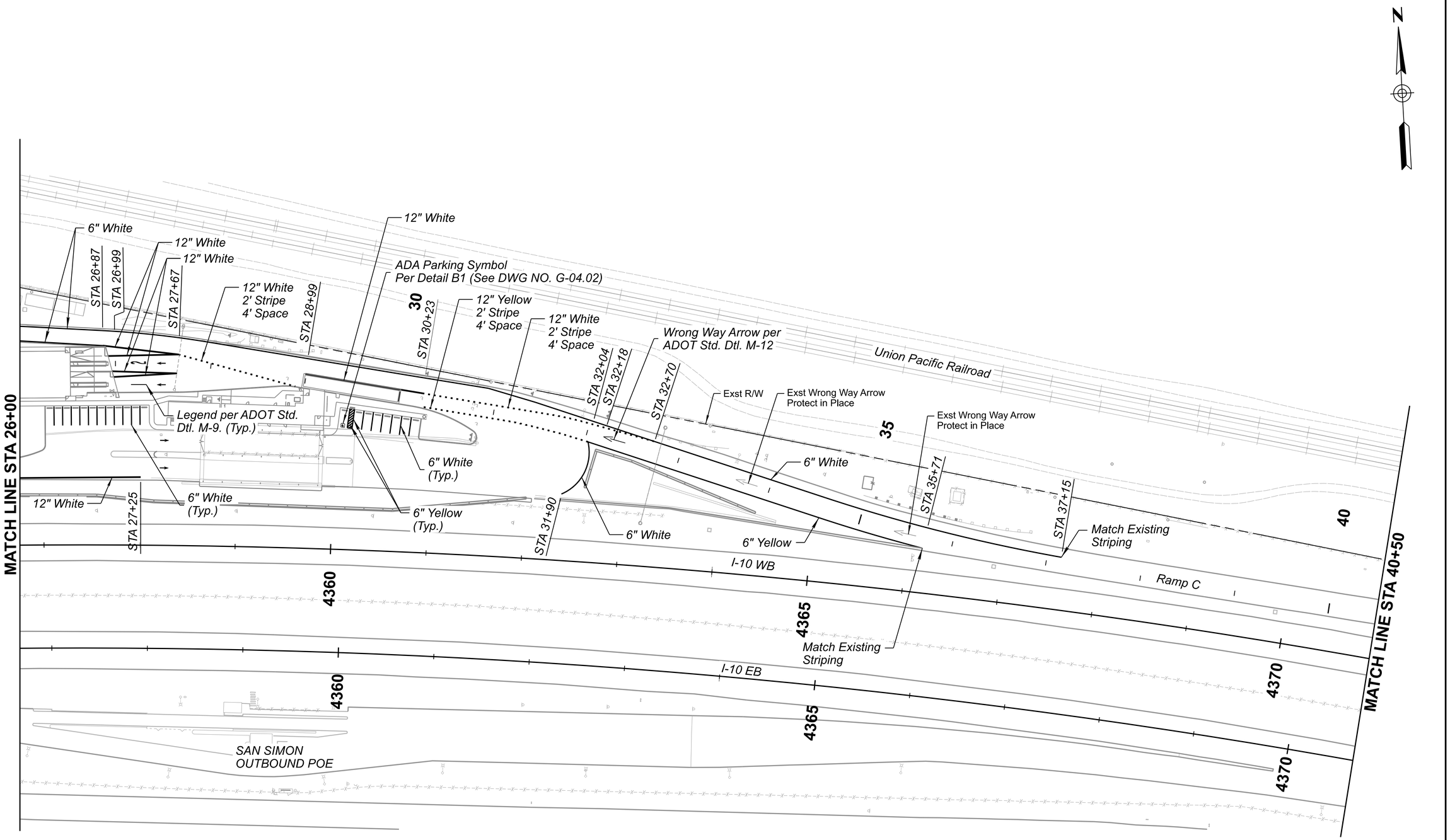

	NAME	DATE
DESIGN	RRG	08/26
DRAWN	EG	08/26
CHECKED	RRG	08/26

Registered Professional Engineer
CERTIFICATE NO.
80518
RACHEL
GRANO
Date: 08/26/2026

Kimley»Horn
© 2026 KIMLEY-HORN AND ASSOCIATES, INC.

ARIZONA DEPARTMENT OF TRANSPORTATION
PROJECT DELIVERY AND OPERATIONS DIVISION
PROJECT MANAGEMENT GROUP

SAN SIMON POE
PAVEMENT MARKING SHEET
STA 26+00 STA 40+50

ROUTE	STATE	PROJECT NO.	FEDERAL ID NO.	SHEET NO.	TOTAL SHEETS	RECORD DRAWING
I-10	ARIZ.	010 CH 383	010-F(238)T	55	200	

MILEPOST

STRUCTURE NO.

F.H.W.A. Arizona Division

LOCATION SAN SIMON PORT OF ENTRY (POE)

TRACS NO. F0728 01C

DWG NO. T-04.05

___ OF ___

ITS GENERAL NOTES

1. *This project has been designed using ADOT's 2024 Traffic Signals & Lighting Standard Drawings, 2025 Construction Standard Drawings, and 2021 ITS Standard Drawings.*

2. *All conduit shall be placed according to the requirements of Subsection 732-3.01 of the specifications, unless otherwise indicated in the plans. Exact conduit route shall be verified with the Engineer prior to excavation to account for field conditions. All conduit, communications, and electrical cable shall be installed according to NEC and EIA requirements.*

3. *All conduit shall be backfilled with select excavated backfill unless otherwise noted on the plans.*

4. *Elbows shall not be permitted except as specified in the plans.*

5. *The plans show the general path and route of conduit and equipment in relation to major physical features. The location of utility poles, fire hydrants, irrigation devices, vegetation and other stationary objects along the conduit path may not be shown but shall be identified by the contractor as the conduit route is marked prior to trenching or plowing. The contractor shall place all conduit in a manner that minimizes bending both horizontally and vertically, thus minimizing induced stresses on cables during cable installation. All conduit routes shall be approved by the Engineer prior to trenching or plowing.*

6. *Dimensional distances for conduit locations are provided to assist the contractor in conduit placement. When no dimensions are shown in the plans, the contractor shall be responsible for field locating conduit around existing utilities, obstructions and to ensure there is no damage to existing pavement and facilities during conduit installation.*

7. *The information shown on the drawings concerning the type and location of existing underground and overhead utilities is approximate and has not been independently verified by the Engineer or the Engineer's agent. The contractor shall determine the exact location of all existing utilities before commencing work, and shall be fully responsible for any and all damages which might result from the contractor's failure to exactly locate and preserve any and all underground and overhead utilities. The contractor shall be responsible to adhere to all current AZ811 laws and Subsection 107.15 of the specifications when locating all existing utilities in the project limits.*

8. *If the conduit must deviate from a tangent path to avoid obstructions, the contractor shall route the conduit curvature (both horizontally and vertically) of 1 inch deflection per foot of length as shown in the plans.*

9. *Contractor shall directional drill new conduit in identified locations. The contractor shall submit a drilling plan and utility profile to the Engineer for review and approval prior to commencement of directional drilling activities. Directional drilling shall be performed under all existing roadways and at locations shown on the plans.*

10. *Plant material may be pruned to provide construction access. The pruning shall be performed by trained and experienced landscape personnel. The pruning methods shall be approved by the Engineer prior to any pruning.*

11. *Any irrigation system damaged by construction activities shall be repaired, flushed and tested at operating pressure for leaks in the system within 24 hours of being damaged by construction activities.*

12. *The information shown on the plans concerning the location of the field devices is for relationship only and is not shown to scale. All placement and construction of field devices shall be within ADOT Right-of-Way.*

13. *All pull boxes, pole foundations, and cabinet foundations shown on the plans shall be verified by the Engineer prior to final placement, installation, and/or construction.*

14. *All conduit installations that do not meet the minimum depth requirements shall be encased in concrete per Subsection 732-3.01.*

15. *All conduit installations crossing ADOT utilities shall adhere to a 2 foot vertical and horizontal clearance.*

16. *All conduit shall be installed at a minimum depth of 30" from existing and proposed grade.*

17. *All ITS equipment to be removed and salvaged shall be returned to ADOT. The contractor shall contact Jason Nelson at (602) 712-8032 (office), (480) 490-1264 (cell), or jnelson2@azdot.gov 2 weeks in advance to coordinate salvaged material location.*

18. *Contractor shall contact Jason Nelson at (602) 712-8032 (office), (480) 490-1264 (cell) or jnelson2@azdot.gov prior to turn on of all CCTV cameras.*

19. *Prior to any construction the contractor shall contact IRD, Prepass, and Drivewyze 3 weeks in advance to relocate their Weigh in Motion system equipment to a temporary location. Contact information is provided in the specifications.*

20. *Top of pole foundation shall be the same elevation as the top of the finished sidewalk ramp, or the adjacent finished roadway surface, in sloper areas. Construct compacted fill around foundation for the full structural support at poles.*

21. *Prior to ADOT's acceptance of conduit and prior to pullin conductors, cables, wires, and/or fiber optic cables, all conduit(s) (new and existing) to be incorporated into the new system as provided for on the Project Plans shall be cleaned and blown out with compressed air in the presence of the Engineer. A properly sized conduit piston or madrel shall be pulled through the entire conduit system in the presence of the Engineer prior to installation of conductors, cables, wires, and/or fiber optic cables to ensure that no obstruction or debris exist in the conduit. No water or moistures shall remain in the conduit(s) prior to installation of conductors, cables, wires, and/or fiber optic cables.*

22. *Prior to manufacture, shop drawings of all signal poles, and signal arms shall be provided to the Engineer for examination and confirmation that all the said equipment meets the requirements of height, length, and placement of tenons for mounting traffic signals on arms as indicated in the plans, and requirements of metal gauge, bolt size, and strength as indicated in ADOT Standard Drawings.*

23. *The contractor shall field verify all new pole locations with the Engineer prior to any construction activity.*

24. *All back plates for signal faces shall be louvered.*

25. *The contractor shall perform a ground resistance test for each installed ground rod and each pole foundation grounding coil in accordance with Subsection 732-3.03. All tests shall be documented and given to the Engineer.*

26. *All the fiber optic cables, IMSA wiring, and camera cables shall be unspliced.*

27. *All signal mounting locations shall be inspected and approved by the Engineer prior to drilling poles. Mounting nipples may require additional lengths, if required by the Engineer, at no additional cost to the Department.*

28. *The contractor shall be responsible for ensuring the height of the signal mast arm is 21 feet above pavement.*

29. *All Electrical, FMS, ITS and Lighting submittals pertaining to ADOT shall be give to the Engineer for review and approval.*

ABBREVIATIONS

AC	*Asphalt Concrete*	*No.*	*Number*
ADOT	*Arizona Department of Transportation*	*N.T.S.*	*Not to Scale*
ASTM	*American Society for Testing and Materials*	*PCCP*	*Portland Cement Concrete Pavement*
AWG	*American Wire Gauge*	*RA*	*Rest Area*
CL	*Center Line*	*RMC*	*Rigid Metal Conduit*
CCTV	*Closed Circuit Television*	*STA.*	*Station*
CZ	*Clear Zone*	*SMFO*	*Single Mode Fiber Optic*
DTL.	*Detail*	*TYP.*	*Typical*
EB	*Eastbound*	*W*	*Watts*
EOTW	*Edge of Travel Way*	*WB*	*Westbound*
Exst	*Existing*	*WIM*	*Weigh In Motion*
FB	*Flash Beacon*	*XFMR*	*Transformer*
FMS	*Freeway Management System*		
GB	*Green Bond*		
GND	*Ground*		
HDPE	*High Density Poly Ethylene*		
HP	*Horse Power*		
HWY	*Highway*		
IRD	*International Road Dynamics*		
ITS	*Intelligent Transportation System*		
kVA	*Kilavolt Ampere*		
MDF	*Main Distribution Frame*		
ML	*Matchline*		
MP	*Milepost*		
NEMA	*National Electrical Manufacturers Association*		

Registered Professional Engineer (Civil)
CERTIFICATE NO.
80518
RACHEL GRANO
Date Signed 08/26/2026

	NAME	DATE
DESIGN	RRG	08/26
DRAWN	EG	08/26
CHECKED	RRG	08/26

Kimley»Horn
© 2026 KIMLEY-HORN AND ASSOCIATES, INC.

ARIZONA DEPARTMENT OF TRANSPORTATION
PROJECT DELIVERY AND OPERATIONS DIVISION
PROJECT MANAGEMENT GROUP

SAN SIMON POE
ITS GENERAL NOTES & ABBREVIATIONS

ROUTE I-10
MILEPOST
STRUCTURE NO.

F.H.W.A. Arizona Division	STATE	PROJECT NO.	FEDERAL ID NO.	SHEET NO.	TOTAL SHEETS	RECORD DRAWING
	ARIZ.	010 CH 383	010-F(238)T	56	200	

LOCATION SAN SIMON PORT OF ENTRY (POE)
DWG NO. T-05.01
TRACS NO. F0728 01C
___ OF ___

8:16:37 AM 8/14/2026 TJ.Bulhoes K:\PHX_Roadway\Worksets\ADOT_PROJECTS_2022R3_10.12_291728040-F0728-SAN SIMON POE\dgn\Traffic\f0728_itsgn_sansimon.dgn

ITS CONSTRUCTION NOTES

1. *Protect in place.*
2. *Remove and salvage existing CCTV camera and associated cabling (outdoor).*
3. *Remove and salvage existing CCTV camera and associated cabling (indoor).*
4. *Remove existing signal head.*
5. *Remove existing pole and foundation.*
6. *Remove existing cabinet.*
7. *Remove existing cables and abandon conduit in place.*
8. *Remove existing pull box.*
9. *Cables to be removed by IRD. Abandon existing conduit.*
10. *Install new media converter.*
11. *Install new WV-S8573L 3 head outdoor multi-directional camera.*
12. *Install new WV-S8574L 4 head outdoor multi-directional camera.*
13. *Install new WV-X25700-V2LN outdoor dome camera.*
14. *Install new WV-X35402-F2L indoor dome camera.*
15. *Install new WJ-NX510K network video recorder and WK-HXE410 extension unit in new I.T. MDF room.*
16. *Install new ground-mounted ITS cabinet and new foundation.*
17. *Install new pole-mounted ITS cabinet.*
18. *Install new wall-mounted ITS cabinet.*
19. *Install 1-2" conduit by trenching per ADOT ITS STD. DWG. FM-1.01 and FM-1.03. See conduit and cable schedule for conduit contents.*
20. *Install 2-2" conduit by trenching per ADOT ITS STD. DWG. FM-1.01 and FM-1.03. See conduit and cable schedule for conduit contents.*
21. *Install 1-2" conduit by directional drilling per ADOT ITS STD. DWG. FM-1.03. See conduit and cable schedule for conduit contents.*
22. *Install 2-3" conduit by trenching per ADOT ITS STD. DWG. FM-1.01 and FM-1.03. See conduit and cable schedule for conduit contents.*
23. *Install 1-2" rigid metal conduit (RMC) per ADOT ITS STD. DWG. FM-1.05. See conduit and cable schedule for conduit contents.*
24. *Install Pull Box (No. 7) (FMS) per ADOT ITS STD. DWG. FM-2.06.*
25. *Install Pull Box (No. 7) per ADOT T.S. STD. DWG. 1-2.*
26. *Route new conduit into existing Pull Box (No. 9).*
27. *Route new conduit into new load center. See electrical plans DWG. No. E000 - E802.*
28. *Route new conduit into new I.T. MDF Room.*
29. *Install Pull Box (No. 9) per ADOT ITS STD. DWG. FM-2.03.*
30. *Intercept existing conduit stub out with new conduit.*
31. *Install new lightning protection device on street light pole per manufacturer requirements.*
32. *Install new access control gate key card reader and mounting equipment per the specifications and manufacturer requirements.*
33. *Install new pad mounted 1.5HP gate motor per manufacturer requirements.*
34. *Coil 25 ft of all SMFO cables in pull box.*
35. *Install new communications equipment in cabinet. See cabinet contents table for equipment.*
36. *Install Pole (Type A) (10 ft.) and foundation per ADOT STD. DWG. T-SL 4.01.*
37. *Install Pole (Type J) and foundation per ADOT STD. DWG. T-SL 4.12.*
38. *Install new access control gate key card reader pedestal per the specifications and manufacturer requirements.*
39. *Install Mast Arm (40 ft.) per ADOT STD. DWG. T-SL 4.12.*
40. *Install Traffic Signal Face (Type E) per ADOT STD. DWG. T.S. 8-1.*
41. *Install Traffic Signal Mounting Assembly (Type II) per ADOT STD. DWG. T.S. 9-1.*
42. *Install Traffic Signal Mounting Assembly (Type III) per ADOT STD. DWG. T.S. 9-2.*
43. *Route new conduit into new Weigh-master booth.*

LEGEND

Existing	New	Description
		Pull Box (No. 7) (FMS)
		Pull Box (No. 7)
		Controller Cabinet
		WV-S8574L 4 Head Outdoor Camera
		WV-S8573L 3 Head Outdoor Camera
		WV-X25700-V2LN Outdoor Dome Camera
		WV-X35402-F2L Indoor Dome Camera
		Truck Sorting System Signal Head
		Lightning Protection Device
		Truck Sorting System Mast Arm Pole
		Power Drop
		Load Center
		Key Card Reader and Mount
		Key Card Gate Motor
		Conduit
	#	*ITS Conduit Note*
	#	*ITS Construction Note*

Registered Professional Engineer (Civil) CERTIFICATE NO. 80518 RACHEL GRAND Date Signed: 08/14/2026

	NAME	DATE
DESIGN	RRG	08/26
DRAWN	EG	08/26
CHECKED	RRG	08/26

Kimley»Horn
© 2026 KIMLEY-HORN AND ASSOCIATES, INC.

ARIZONA DEPARTMENT OF TRANSPORTATION
PROJECT DELIVERY AND OPERATIONS DIVISION
PROJECT MANAGEMENT GROUP

SAN SIMON POE
ITS CONSTRUCTION NOTES & LEGEND

ROUTE I-10
MILEPOST
STRUCTURE NO.

F.H.W.A. Arizona Division

STATE	PROJECT NO.	FEDERAL ID NO.	SHEET NO.	TOTAL SHEETS	RECORD DRAWING
ARIZ.	010 CH 383	010-F(238)T	57	200	

LOCATION SAN SIMON PORT OF ENTRY (POE)

TRACS NO. F0728 01C

DWG NO. T-05.02

___ OF ___

8:16:59 AM 8/14/2026 TJ.Bulhoes K:\PHX_Roadway\Worksets\ADOT_PROJECTS_2022R3_10.12_291728040-F0728-SAN SIMON POE\dgn\Traffic\f0728_itscn_sansimon.dgn

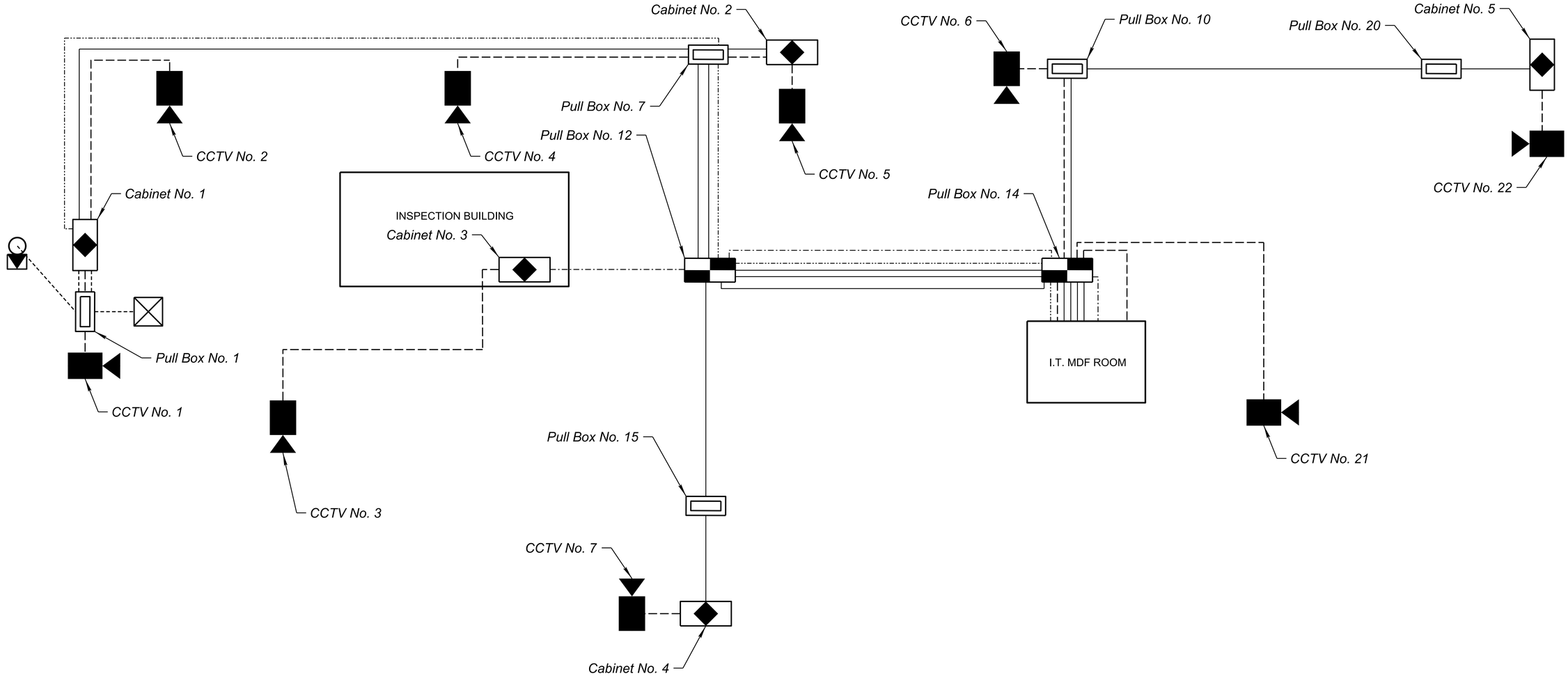

LEGEND

- New Pull Box (No. 7) (FMS)
- New Cabinet
- New Pull Box (No. 9)
- New CCTV Camera
- Access Control Gate Key Card Reader
- Access Control Gate Motor
- New 6 SMFO Cable
- New 12 SMFO Cable
- New CCTV Cable (CAT6)
- New Access Control Gate Downstream Board Cable
- New Access Control Gate Cable

Registered Professional Engineer (Civil) CERTIFICATE NO. 80518 RACHEL GRANO Date: 7/14/2026

	NAME	DATE
DESIGN	RRG	08/26
DRAWN	EG	08/26
CHECKED	RRG	08/26

Kimley»Horn

© 2026 KIMLEY-HORN AND ASSOCIATES, INC.

ARIZONA DEPARTMENT OF TRANSPORTATION
PROJECT DELIVERY AND OPERATIONS DIVISION
PROJECT MANAGEMENT GROUP

SAN SIMON POE
ITS COMMUNICATION SCHEMATIC

ROUTE I-10
MILEPOST
STRUCTURE NO.

F.H.W.A. Arizona Division

STATE	PROJECT NO.	FEDERAL ID NO.	SHEET NO.	TOTAL SHEETS	RECORD DRAWING
ARIZ.	010 CH 383	010-F(238)T	58	200	

LOCATION SAN SIMON PORT OF ENTRY (POE)

DWG NO. T-05.03

TRACS NO. F0728 01C

___ OF ___

8:17:18 AM 8/14/2026 TJ.Bulhoes K:\PHX_Roadway\Worksets\ADOT_PROJECTS_2022R3_10.12_291728040-F0728-SAN SIMON POE\dgn\Traffic\f0728_its07_sansimon.dgn

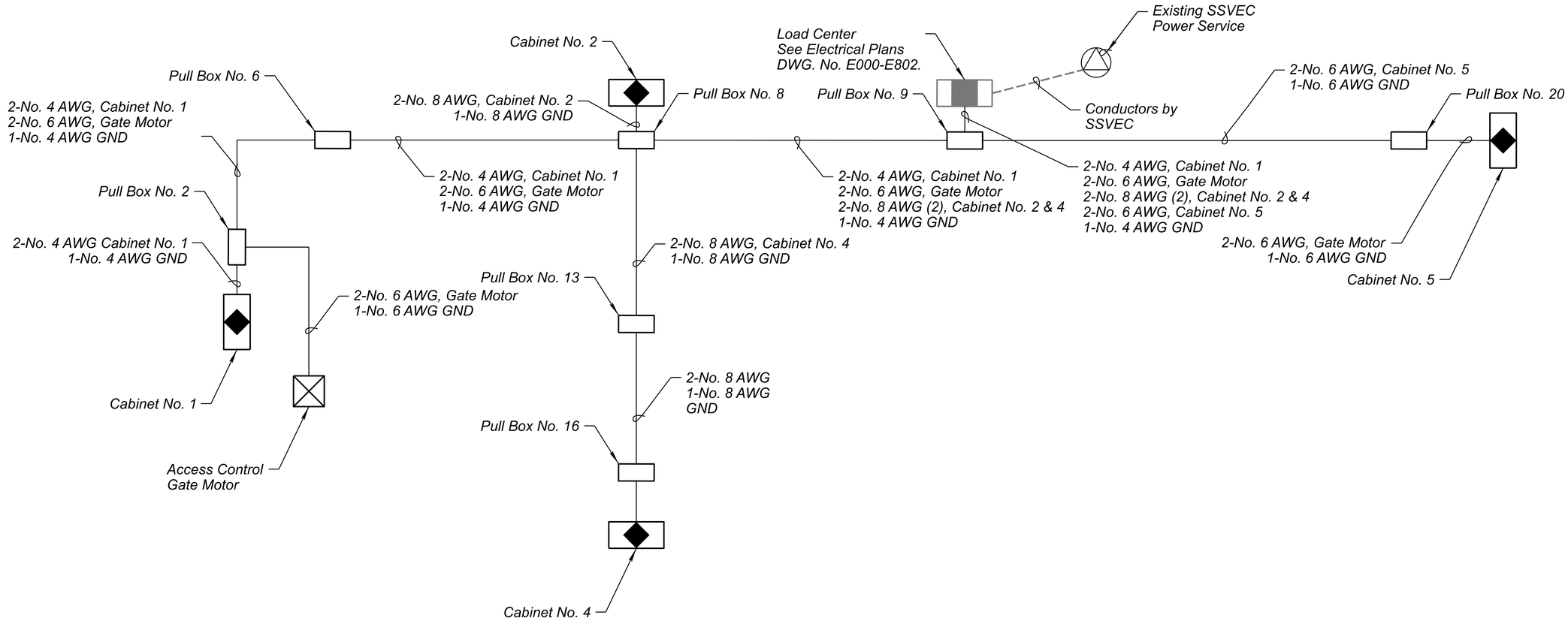

PANELBOARD SCHEDULE*							
LOAD CENTER No.:			SES-2				
MAIN CIRCUIT BREAKER:			600A, 208/120V, 3PH				
CIRCUIT BREAKER PANEL No.	CIRCUIT BREAKER PANEL No.	CIRCUIT BREAKER	BREAKER AMPS	OUTPUT VOLTS	CABINET No.	LOAD AMPS	COMMENTS
L1	17	C	20	120	Cabinet No. 1	6.5	
L1	55	A	20	120	Cabinet No. 2	5.6	
L1	57	B	20	120	Cabinet No. 4	4.3	
L1	19	A	20	120	Cabinet No. 5	4.3	
					AMPS at 120V	20.7	
L3	15,17	B-C	30	208	Gate Motor	5.8	
					AMPS at 208V	5.8	
					TOTAL POWER	3690	
					SERVICE AMPS at 208V	10.2	

** Panel schedule on this sheet is for reference only and not for construction purposes.*
See electrical plans DWG No. E701 for full panel schedule details.

Registered Professional Engineer (Civil)
CERTIFICATE NO.
80518
RACHEL
GRANO
Date 8/14/2026

	NAME	DATE
DESIGN	RRG	08/26
DRAWN	EG	08/26
CHECKED	RRG	08/26

Kimley»Horn
© 2026 KIMLEY-HORN AND ASSOCIATES, INC.

ARIZONA DEPARTMENT OF TRANSPORTATION
PROJECT DELIVERY AND OPERATIONS DIVISION
PROJECT MANAGEMENT GROUP

SAN SIMON POE
ITS ONE LINE DIAGRAM

ROUTE I-10
MILEPOST
STRUCTURE NO.

F.H.W.A. Arizona Division	STATE	PROJECT NO.	FEDERAL ID NO.	SHEET NO.	TOTAL SHEETS	RECORD DRAWING
	ARIZ.	010 CH 383	010-F(238)T	59	200	

LOCATION SAN SIMON PORT OF ENTRY (POE)
DWG NO. T-05.04
TRACS NO. F0728 01C
___ OF ___

8:17:35 AM 8/14/2026 TJ.Bulhoes K:\PHX_Roadway\Worksets\ADOT_PROJECTS_2022R3_10.12_291728040-F0728-SAN SIMON POE\dgn\Traffic\f0728_its08_sansimon.dgn

ITS CONSTRUCTION NOTES

1. *Protect in place.*
2. *Remove and salvage existing CCTV camera and associated cabling (outdoor).*
3. *Remove and salvage existing CCTV camera and associated cabling (indoor).*
4. *Remove existing signal head.*
5. *Remove existing pole and foundation.*
6. *Remove existing cabinet.*
7. *Remove existing cables and abandon conduit in place.*
8. *Remove existing pull box.*
9. *Cables to be removed by IRD. Abandon existing conduit.*

30

N

Exst R/W

MATCHLINE STA 31+00

I-10 WB

LEGEND:

■ *Item will be paid for under Item No. 2020050*

	NAME	DATE
DESIGN	RRG	09/26
DRAWN	EG	09/26
CHECKED	RRG	09/26

Registered Professional Engineer (Civil) CERTIFICATE NO. 80518 RACHEL GRANO Date 9/22/2026

Kimley»Horn

© 2026 KIMLEY-HORN AND ASSOCIATES, INC.

ARIZONA DEPARTMENT OF TRANSPORTATION
PROJECT DELIVERY AND OPERATIONS DIVISION
PROJECT MANAGEMENT GROUP

SAN SIMON POE
ITS REMOVAL PLAN SHEET
SHEET 1 OF 2

ROUTE	F.H.W.A. Arizona Division	STATE	PROJECT NO.	FEDERAL ID NO.	SHEET NO.	TOTAL SHEETS	RECORD DRAWING
I-10		ARIZ.	010 CH 383	010-F(238)T	60	200	
MILEPOST	LOCATION SAN SIMON PORT OF ENTRY (POE)						DWG NO. T-05.05
STRUCTURE NO.	TRACS NO. F0728 01C						___ OF___

ITS CONSTRUCTION NOTES

1. *Protect in place.*
4. *Remove existing signal head.*
7. *Remove existing cables and abandon conduit in place.*
9. *Cables to be removed by IRD. Abandon existing conduit.*

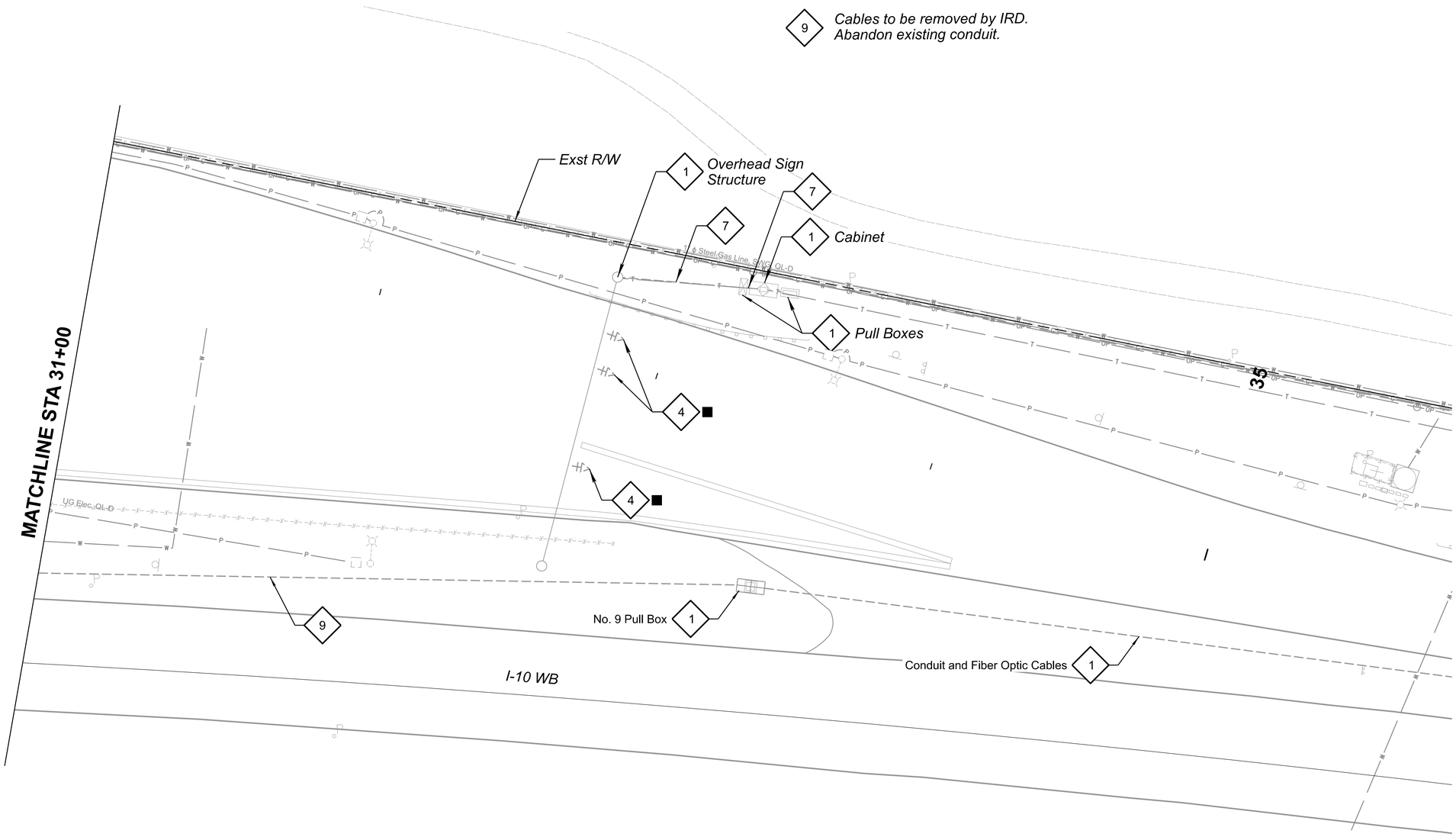

LEGEND:

■ *Item will be paid for under Item No. 2020050*

Registered Professional Engineer (Civil) CERTIFICATE NO. 80518 RACHEL GRANO Date 9/26/2026

	NAME	DATE
DESIGN	RRG	09/26
DRAWN	EG	09/26
CHECKED	RRG	09/26

Kimley»Horn

© 2026 KIMLEY-HORN AND ASSOCIATES, INC.

ARIZONA DEPARTMENT OF TRANSPORTATION
PROJECT DELIVERY AND OPERATIONS DIVISION
PROJECT MANAGEMENT GROUP

SAN SIMON POE
ITS REMOVAL PLAN SHEET
SHEET 2 OF 2

ROUTE I-10
MILEPOST
STRUCTURE NO.

F.H.W.A. Arizona Division	STATE	PROJECT NO.	FEDERAL ID NO.	SHEET NO.	TOTAL SHEETS	RECORD DRAWING
	ARIZ.	010 CH 383	010-F(238)T	61	200	

LOCATION SAN SIMON PORT OF ENTRY (POE)

TRACS NO. F0728 01C

DWG NO. T-05.06

___ OF ___

11:24:47 AM 9/22/2026 TJ.Bulhoes K:\PHX_Roadway\Worksets\ADOT_PROJECTS_2022R3_10.12_291728040-F0728-SAN SIMON POE\dgn\Traffic\f0728_its02_sansimon.dgn

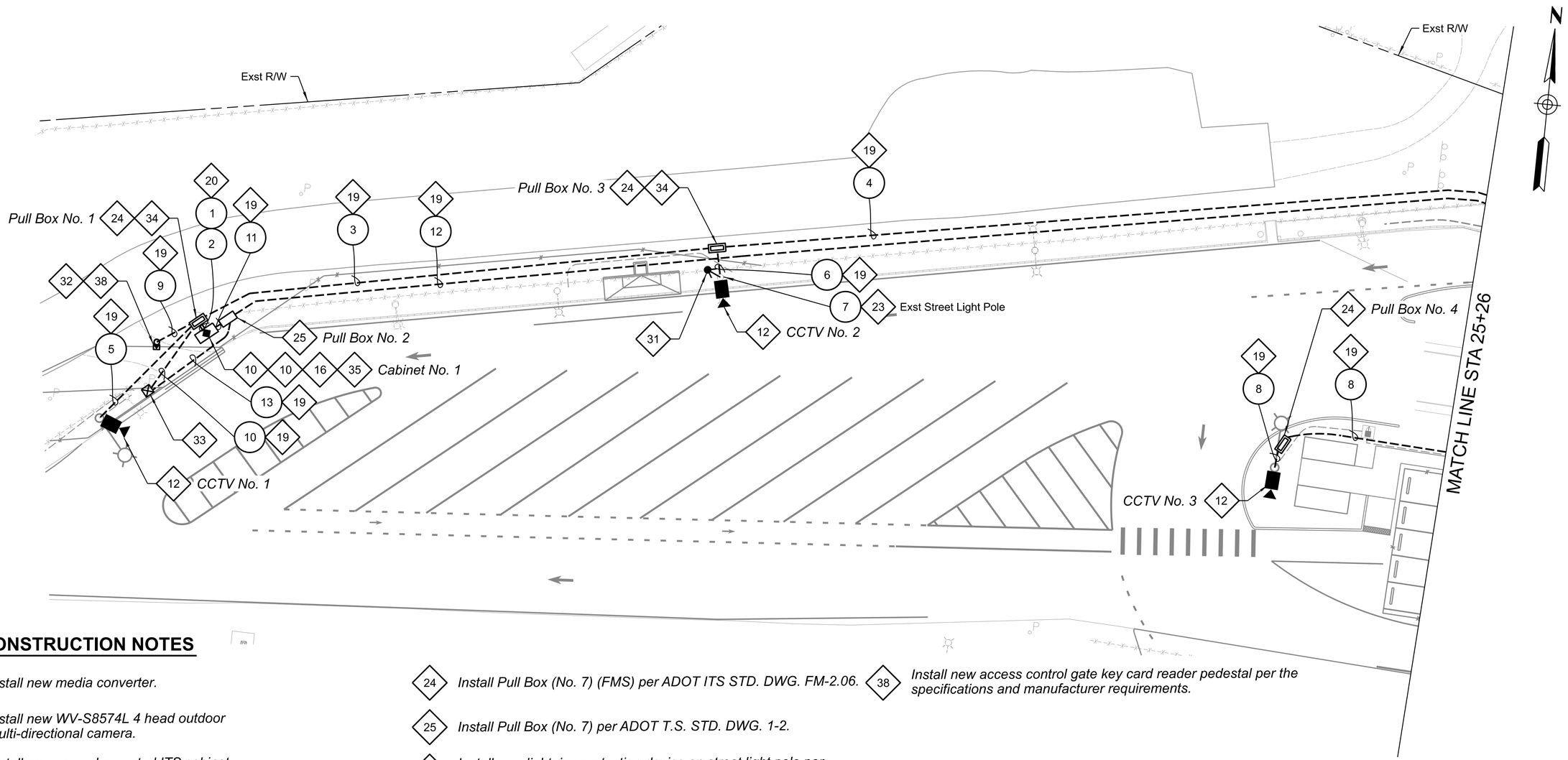

ITS CONSTRUCTION NOTES

10 *Install new media converter.*

12 *Install new WV-S8574L 4 head outdoor multi-directional camera.*

16 *Install new ground-mounted ITS cabinet and new foundation.*

19 *Install 1-2" conduit by trenching per ADOT ITS STD. DWG. FM-1.01 and FM-1.03. See conduit and cable schedule for conduit contents.*

20 *Install 2-2" conduit by trenching per ADOT ITS STD. DWG. FM-1.01 and FM-1.03. See conduit and cable schedule for conduit contents.*

23 *Install 1-2" rigid metal conduit (RMC) per ADOT ITS STD. DWG. FM-1.05. See conduit and cable schedule for conduit contents.*

24 *Install Pull Box (No. 7) (FMS) per ADOT ITS STD. DWG. FM-2.06.*

25 *Install Pull Box (No. 7) per ADOT T.S. STD. DWG. 1-2.*

31 *Install new lightning protection device on street light pole per manufacturer requirements.*

32 *Install new access control gate key card reader and mounting equipment per the specifications and manufacturer requirements.*

33 *Install new pad mounted 1.5HP gate motor per manufacturer requirements.*

34 *Coil 25 ft of all SMFO cables in pull box.*

35 *Install new communications equipment in cabinet. See cabinet contents table for equipment.*

38 *Install new access control gate key card reader pedestal per the specifications and manufacturer requirements.*

Note: See conduit and cable schedule on the next sheet for corresponding conduit content information denoted by the circled numbers.

Registered Professional Engineer (Civil) CERTIFICATE NO. 80518 RACHEL GRANO Date: 08/26/2026

	NAME	DATE
DESIGN	RRG	08/26
DRAWN	EG	08/26
CHECKED	RRG	08/26

Kimley»Horn

© 2026 KIMLEY-HORN AND ASSOCIATES, INC.

ARIZONA DEPARTMENT OF TRANSPORTATION
PROJECT DELIVERY AND OPERATIONS DIVISION
PROJECT MANAGEMENT GROUP

SAN SIMON POE
ITS PLAN SHEET
SHEET 1 OF 3

ROUTE I-10
MILEPOST
STRUCTURE NO.

F.H.W.A. Arizona Division

STATE	PROJECT NO.	FEDERAL ID NO.	SHEET NO.	TOTAL SHEETS	RECORD DRAWING
ARIZ.	010 CH 383	010-F(238)T	62	200	

LOCATION SAN SIMON PORT OF ENTRY (POE)

DWG NO. T-05.07

TRACS NO. F0728 01C

___ OF ___

8:18:44 AM 8/14/2026 TJ.Bulhoes K:\PHX_Roadway\Worksets\ADOT_PROJECTS_2022R3_10.12_291728040-F0728-SAN SIMON POE\dgn\Traffic\f0728_its03_sansimon.dgn

CONDUIT AND CABLE SCHEDULE

COND NO.	SIZE	FROM	TO	CONTENTS	NOTES
1	2"	Cabinet No. 1	Pull Box No. 1	6 SMFO Cable, CAT6 Cable (2), 2-Pair #18 AWG Twisted Copper Cable, 1 - No. 10 AWG GND	
2	2"	Cabinet No. 1	Pull Box No. 1	Access Control Gate Cable	
3	2"	Pull Box No. 1	Pull Box No. 3	6 SMFO Cable, CAT6 Cable, 2-Pair #18 AWG Twisted Copper Cable, 1 - No. 10 AWG GND	
4	2"	Pull Box No. 3	ML	6 SMFO Cable, 2-Pair #18 AWG Twisted Copper Cable, 1 - No. 10 AWG GND	
5	2"	Pull Box No. 1	CCTV No. 1	CAT6 Cable	
6	2"	Pull Box No. 3	Existing Street Light Pole	CAT6 Cable	
7	2" RMC	Existing Street Light Pole	CCTV No. 2	CAT6 Cable	
8	2"	CCTV No. 3 & 4	ML	CAT6 Cable (2)	
9	2"	Pull Box No. 1	Gate Key Card Reader	Access Control Gate Cable	
10	2"	Pull Box No. 1	Gate Motor	Access Control Gate Cable	
11	2"	Cabinet No. 1	Pull Box No. 2	2 - No. 4 AWG, 1 - No. 4 AWG GND	
12	2"	Pull Box No. 2	ML	2 - No. 4 AWG, 1 - No. 4 AWG GND, 2 - No. 6 AWG	
13	2"	Pull Box No. 2	Gate Motor	2 - No. 6 AWG, 1 - No. 6 AWG GND	

CABINET CONTENTS

Cabinet No. 1
CCTV Field Equipment (2)
Media Converter (2)
PoE Injector (2)
Access Control Gate Power Supply
Access Control Gate Downstream Board
Breaker Panel (30 Amp)

PULL BOX SCHEDULE

PB NO.	SIZE	STATION	*LAT	*LONG
Pull Box No. 1	Pull Box (No. 7) (FMS)	Approx as shown		
Pull Box No. 2	Pull Box (No. 7)	Approx as shown		
Pull Box No. 3	Pull Box (No. 7) (FMS)	Approx as shown		
Pull Box No. 4	Pull Box (No. 7)	Approx as shown		

CONDUIT RECORD DRAWING SCHEDULE

POINT	*NORTHING	*EASTING	*GROUND ELEVATION	DESCRIPTION

CONDUIT RECORD DRAWING SCHEDULE

POINT	*NORTHING	*EASTING	*GROUND ELEVATION	DESCRIPTION

CONDUIT RECORD DRAWING SCHEDULE

POINT	*NORTHING	*EASTING	*GROUND ELEVATION	DESCRIPTION

GPS and Ground Coordinates left blank. The contractor shall as-built the GPS and Ground Coordinates of all new facilities within the project limits.

Registered Professional Engineer (Civil)
CERTIFICATE NO.
80518
RACHEL GRANO
Date 8/14/2026

	NAME	DATE
DESIGN	RRG	08/26
DRAWN	EG	08/26
CHECKED	RRG	08/26

Kimley»Horn
© 2026 KIMLEY-HORN AND ASSOCIATES, INC.

ARIZONA DEPARTMENT OF TRANSPORTATION
PROJECT DELIVERY AND OPERATIONS DIVISION
PROJECT MANAGEMENT GROUP

SAN SIMON POE
CONDUIT AND CABLE SCHEDULE
SHEET 1 OF 3

ROUTE I-10
MILEPOST
STRUCTURE NO.

F.H.W.A. Arizona Division	STATE	PROJECT NO.	FEDERAL ID NO.	SHEET NO.	TOTAL SHEETS	RECORD DRAWING
	ARIZ.	010 CH 383	010-F(238)T	63	200	

LOCATION SAN SIMON PORT OF ENTRY (POE)

TRACS NO. F0728 01C

DWG NO. T-05.08

____ OF____

8:19:02 AM 8/14/2026 TJ.Bulhoes K:\PHX_Roadway\Worksets\ADOT_PROJECTS_2022R3_10.12_291728040-F0728-SAN SIMON POE\dgn\Traffic\f0728_cc01_sansimon.dgn

Note: See conduit and cable schedule on the next sheet for corresponding conduit content information denoted by the circled numbers.

See Dwg. No. T-05.13 for CCTV cameras inside the buildings.

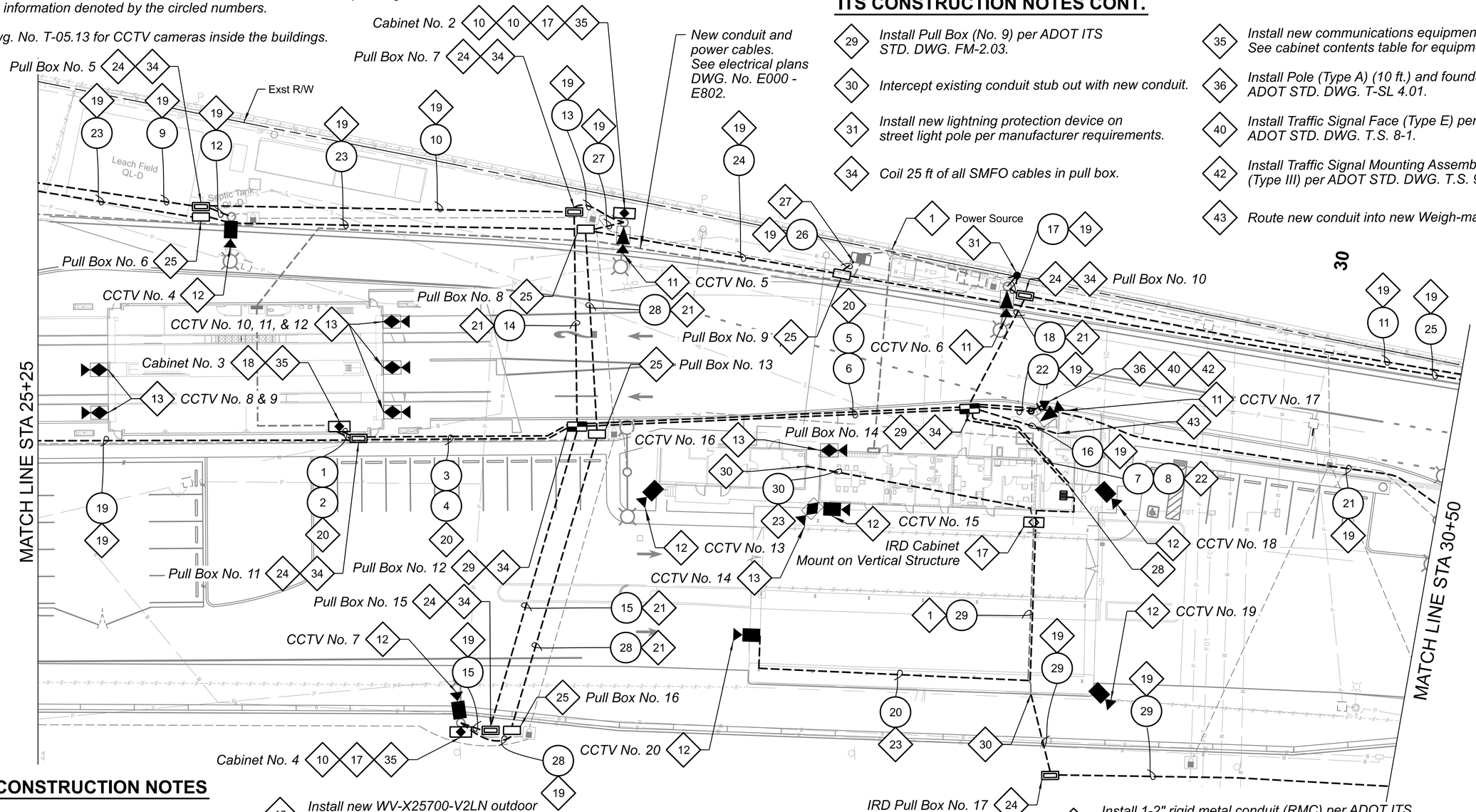

ITS CONSTRUCTION NOTES CONT.

- 29 — Install Pull Box (No. 9) per ADOT ITS STD. DWG. FM-2.03.
- 30 — Intercept existing conduit stub out with new conduit.
- 31 — Install new lightning protection device on street light pole per manufacturer requirements.
- 34 — Coil 25 ft of all SMFO cables in pull box.
- 35 — Install new communications equipment in cabinet. See cabinet contents table for equipment.
- 36 — Install Pole (Type A) (10 ft.) and foundation per ADOT STD. DWG. T-SL 4.01.
- 40 — Install Traffic Signal Face (Type E) per ADOT STD. DWG. T.S. 8-1.
- 42 — Install Traffic Signal Mounting Assembly (Type III) per ADOT STD. DWG. T.S. 9-2.
- 43 — Route new conduit into new Weigh-master booth.

ITS CONSTRUCTION NOTES

- 1 — Protect in place.
- 10 — Install new media converter.
- 11 — Install new WV-S8573L 3 head outdoor multi-directional camera.
- 12 — Install new WV-S8574L 4 head outdoor multi-directional camera.
- 13 — Install new WV-X25700-V2LN outdoor dome camera.
- 17 — Install new pole-mounted ITS cabinet.
- 18 — Install new wall-mounted ITS cabinet.
- 19 — Install 1-2" conduit by trenching per ADOT ITS STD. DWG. FM-1.01 and FM-1.03. See conduit and cable schedule for conduit contents.
- 20 — Install 2-2" conduit by trenching per ADOT ITS STD. DWG. FM-1.01 and FM-1.03. See conduit and cable schedule for conduit contents.
- 21 — Install 1-2" conduit by directional drilling per ADOT ITS STD. DWG. FM-1.03. See conduit and cable schedule for conduit contents.
- 22 — Install 2-3" conduit by trenching per ADOT ITS STD. DWG. FM-1.01 and FM-1.03. See conduit and cable schedule for conduit contents.
- 23 — Install 1-2" rigid metal conduit (RMC) per ADOT ITS STD. DWG. FM-1.05. See conduit and cable schedule for conduit contents.
- 24 — Install Pull Box (No. 7) (FMS) per ADOT ITS STD. DWG. FM-2.06.
- 25 — Install Pull Box (No. 7) per ADOT T.S. STD. DWG. 1-2.
- 28 — Route new conduit into new I.T. MDF Room.

Registered Professional Engineer (Civil) CERTIFICATE NO. 80518 RACHEL GRANO Date 8/14/2026

	NAME	DATE
DESIGN	RRG	08/26
DRAWN	EG	08/26
CHECKED	RRG	08/26

Kimley»Horn
© 2026 KIMLEY-HORN AND ASSOCIATES, INC.

ARIZONA DEPARTMENT OF TRANSPORTATION
PROJECT DELIVERY AND OPERATIONS DIVISION
PROJECT MANAGEMENT GROUP

SAN SIMON POE
ITS PLAN SHEET
SHEET 2 OF 3

ROUTE I-10
MILEPOST
STRUCTURE NO.

F.H.W.A. Arizona Division	STATE	PROJECT NO.	FEDERAL ID NO.	SHEET NO.	TOTAL SHEETS	RECORD DRAWING
	ARIZ.	010 CH 383	010-F(238)T	64	200	

LOCATION SAN SIMON PORT OF ENTRY (POE)

DWG NO. T-05.09

TRACS NO. F0728 01C

____ OF____

8:19:28 AM 8/14/2026 TJ.Bulhoes K:\PHX_Roadway\Worksets\ADOT_PROJECTS_2022R3_10.12_291728040-F0728-SAN SIMON POE\dgn\Traffic\f0728_its04_sansimon.dgn

CONDUIT AND CABLE SCHEDULE

COND NO.	SIZE	FROM	TO	CONTENTS	NOTES
1	2"	Cabinet No. 3	Pull Box No. 11	12 SMFO Cable (1)	
2	2"	Cabinet No. 3	Pull Box No. 11	CAT6 Cable (1)	
3	2"	Pull Box No. 11	Pull Box No. 12	12 SMFO Cable (1)	
4	2"	Pull Box No. 11	Pull Box No. 12	Spare	
5	2"	Pull Box No. 12	Pull Box No. 14	12 SMFO Cable (1), 6 SMFO (3)	
6	2"	Pull Box No. 12	Pull Box No. 14	2-Pair #18 AWG Twisted Copper Cable, 1 - No. 10 AWG GND	
7	3"	Pull Box No. 14	I.T. MDF Room	12 SMFO Cable (1), 6 SMFO (4), 2-Pair #18 AWG Twisted Copper Cable, 1 - No. 10 AWG GND	
8	3"	Pull Box No. 14	I.T. MDF Room	CAT6 Cable (2)	
9	2"	ML	Pull Box No. 5	6 SMFO Cable, 2-Pair #18 AWG Twisted Copper Cable, 1 - No. AWG GND	
10	2"	Pull Box No. 5	Pull Box No. 7	6 SMFO Cable, CAT6 Cable, 2-Pair #18 AWG Twisted Copper Cable, 1 - No. 10 AWG GND	
11	2"	Pull Box No. 8	ML	6 SMFO Cable	
12	2"	Pull Box No. 5	CCTV No. 5	CAT6 Cable	
13	2"	Pull Box No. 7	Cabinet No. 2	6 SMFO Cable, CAT6 Cable	
14	2"	Pull Box No. 7	Pull Box No. 12	6 SMFO Cable (2), 2-Pair #18 AWG Twisted Copper Cable, 1 - No. 10 AWG GND	
15	2"	Pull Box No. 12	CCTV No. 9	6 SMFO Cable	
16	2"	Pull Box No. 14	Weigh-master booth	4 - Conductor IMSA 19-1 Cable (3), 1 - No. 10 AWG GND	
17	2"	Pull Box No. 8	CCTV No. 7	CAT6 Cable	
18	2"	Pull Box No. 8	Pull Box No. 14	6 SMFO Cable, CAT6 Cable	
19	2"	ML	Pull Box No. 11	CAT6 Cable (1)	
20	2" RMC	I.T. MDF Room	CCTV No. 19	CAT6 Cable	
21	2"	Pull Box No. 14	ML	CAT6 Cable, 4 - Conductor IMSA 19-1 Cable (2), 1 - No. 10 AWG GND	
22	2"	Pull Box No. 14	Pole (Type A) (10 ft.)	4 - Conductor IMSA 19-1 Cable, 1-No. 10 AWG GND	
23	2"	ML	Pull Box No. 8	2 - No. 4 AWG, 1 - No. 4 AWG GND, 2-No. 6 AWG	
24	2"	Pull Box No. 8	Pull Box No. 9	2 - No. 4 AWG, 1 - No. 4 AWG GND, 2-No. 6 AWG, 2 - No. 8 AWG (2)	
25	2"	Pull Box No. 9	ML	2 - No. 6 AWG, 1 - No. 6 AWG GND	
26	2"	Exst Load Center	Pull Box No. 9	2 - No. 4 AWG, 1 - No. 4 AWG GND, 2 - No. 6 AWG (2), 2 - No. 8 AWG (2)	
27	2"	Pull Box No. 8	Cabinet No. 2	2 -No. 8 AWG, 1 - No. 8 AWG GND	
28	2"	Pull Box No. 8	Cabinet No. 4	2 - No. 8 AWG, 1 - No. 8 AWG GND	
29	2"	IRD Cabinet	ML	IRD Cable (By Others)	IRD Equipment
30	2" RMC	Building	IRD Cabinet	IRD Cable (By Others)	IRD Equipment

CABINET CONTENTS

Cabinet No. 2
CCTV Field Equipment (2)
Media Converter (2)
PoE Injector (2)
Cabinet No. 3
CCTV Field Equipment (13)
Ethernet Switch (ADOT Furnished)
8 Port PoE Injector (2)
Lane Control Signal System Equipment
Cabinet No. 4
CCTV Field Equipment (1)
Media Converter (1)
PoE Injector (1)

PULL BOX SCHEDULE

PB NO.	SIZE	STATION	*LAT	*LONG
Pull Box No. 5	Pull Box (No. 7) (FMS)	Approx as shown		
Pull Box No. 6	Pull Box (No. 7)	Approx as shown		
Pull Box No. 7	Pull Box (No. 7) (FMS)	Approx as shown		
Pull Box No. 8	Pull Box (No. 7)	Approx as shown		
Pull Box No. 9	Pull Box (No. 7)	Approx as shown		
Pull Box No. 10	Pull Box (No. 7) (FMS)	Approx as shown		
Pull Box No. 11	Pull Box (No. 7) (FMS)	Approx as shown		
Pull Box No. 12	Pull Box (No. 9)	Approx as shown		
Pull Box No. 13	Pull Box (No. 7)	Approx as shown		
Pull Box No. 14	Pull Box (No. 9)	Approx as shown		
Pull Box No. 15	Pull Box (No. 7) (FMS)	Approx as shown		
Pull Box No. 16	Pull Box (No. 7)	Approx as shown		
IRD Pull Box No. 17	Pull Box (No. 7) (FMS)	Approx as shown		

Note: See conduit and cable schedule on the next sheet for corresponding conduit content information denoted by the circled numbers.

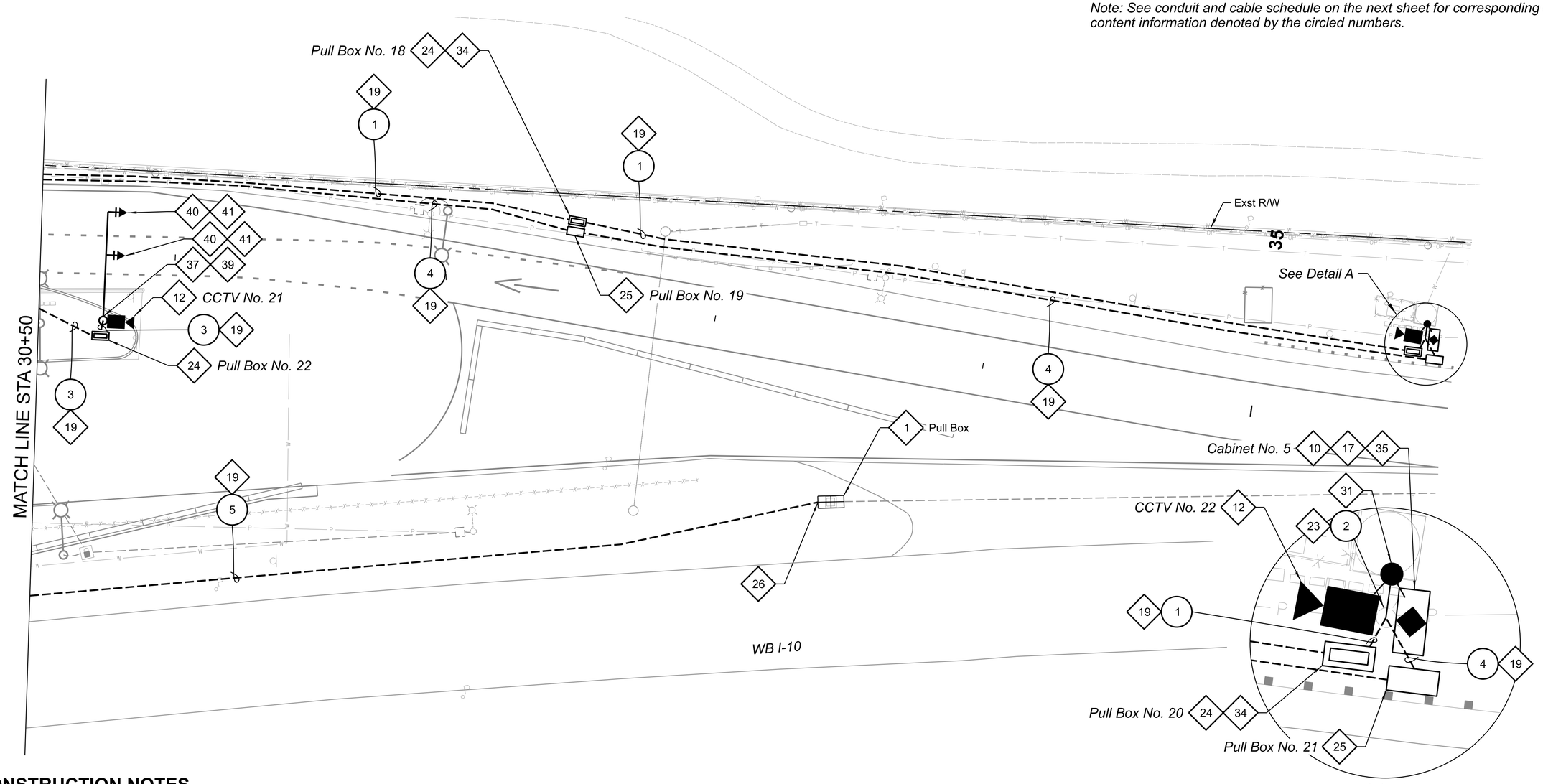

Detail A

ITS CONSTRUCTION NOTES

1. *Protect in place.*
10. *Install new media converter.*
12. *Install new WV-S8574L 4 head outdoor multi-directional camera.*
17. *Install new pole-mounted ITS cabinet.*
19. *Install 1-2" conduit by trenching per ADOT ITS STD. DWG. FM-1.01 and FM-1.03. See conduit and cable schedule for conduit contents.*
23. *Install 1-2" rigid metal conduit (RMC) per ADOT ITS STD. DWG. FM-1.05. See conduit and cable schedule for conduit contents.*
24. *Install Pull Box (No. 7) (FMS) per ADOT ITS STD. DWG. FM-2.06.*
25. *Install Pull Box (No. 7) per ADOT T.S. STD. DWG. 1-2.*
26. *Route new conduit into existing Pull Box (No. 9).*
31. *Install new lightning protection device on street light pole per manufacturer requirements.*
34. *Coil 25 ft of SMFO (6 fibers) cable in pull box.*
35. *Install new communications equipment in cabinet. See cabinet contents table for equipment.*
37. *Install Pole (Type J) and foundation per ADOT STD. DWG. T-SL 4.12.*
39. *Install Mast Arm (40 ft.) per ADOT STD. DWG. T-SL 4.12.*
40. *Install Traffic Signal Face (Type E) per ADOT STD. DWG. T.S. 8-1.*
41. *Install Traffic Signal Mounting Assembly (Type II) per ADOT STD. DWG. T.S. 9-1.*

Registered Professional Engineer (Civil) CERTIFICATE NO. 80518 RACHEL GRANO Date 8/14/2026

	NAME	DATE
DESIGN	RRG	08/26
DRAWN	EG	08/26
CHECKED	RRG	08/26

Kimley»Horn
© 2026 KIMLEY-HORN AND ASSOCIATES, INC.

ARIZONA DEPARTMENT OF TRANSPORTATION
PROJECT DELIVERY AND OPERATIONS DIVISION
PROJECT MANAGEMENT GROUP

SAN SIMON POE
ITS PLAN SHEET
SHEET 3 OF 3

ROUTE I-10
MILEPOST
STRUCTURE NO.

F.H.W.A. Arizona Division	STATE	PROJECT NO.	FEDERAL ID NO.	SHEET NO.	TOTAL SHEETS	RECORD DRAWING
	ARIZ.	010 CH 383	010-F(238)T	66	200	

LOCATION SAN SIMON PORT OF ENTRY (POE)

DWG NO. T-05.11

TRACS NO. F0728 01C

___ OF ___

8:20:13 AM 8/14/2026 TJ.Bulhoes K:\PHX_Roadway\Worksets\ADOT_PROJECTS_2022R3_10.12_291728040-F0728-SAN SIMON POE\dgn\Traffic\f0728_its05_sansimon.dgn

CONDUIT AND CABLE SCHEDULE

COND NO.	SIZE	FROM	TO	CONTENTS	NOTES
1	2"	ML	Cabinet No. 5	6 SMFO Cable	
2	2" RMC	Cabinet No. 5	CCTV No. 22	CAT6 Cable	
3	2"	ML	CCTV No. 21	CAT6 Cable, 4 - Conductor IMSA 19-1 Cable (2), 1 - No. 10 AWG GND	
4	2"	ML	Cabinet No. 5	2 - No. 6 AWG, 1 - No. 6 AWG GND	
5	2"	ML	Exst Pull Box	IRD Cable (By Others)	IRD Equipment

CABINET CONTENTS

Cabinet No. 5
CCTV Field Equipment (1)
Media Converter (1)
PoE Injector (1)

PULL BOX SCHEDULE

PB NO.	SIZE	STATION	*LAT	*LONG
Pull Box No. 18	Pull Box (No. 7) (FMS)	Approx as shown		
Pull Box No. 19	Pull Box (No. 7)	Approx as shown		
Pull Box No. 20	Pull Box (No. 7) (FMS)	Approx as shown		
Pull Box No. 21	Pull Box (No. 7)	Approx as shown		
Pull Box No. 22	Pull Box (No. 7) (FMS)	Approx as shown		

CONDUIT RECORD DRAWING SCHEDULE

POINT	*NORTHING	*EASTING	*GROUND ELEVATION	DESCRIPTION

CONDUIT RECORD DRAWING SCHEDULE

POINT	*NORTHING	*EASTING	*GROUND ELEVATION	DESCRIPTION

CONDUIT RECORD DRAWING SCHEDULE

POINT	*NORTHING	*EASTING	*GROUND ELEVATION	DESCRIPTION

GPS and Ground Coordinates left blank. The contractor shall as-built the GPS and Ground Coordinates of all new facilities within the project limits.

Registered Professional Engineer (Civil)
CERTIFICATE NO.
80518
RACHEL GRANO
Date Signed 8/14/2026

	NAME	DATE
DESIGN	RRG	08/26
DRAWN	EG	08/26
CHECKED	RRG	08/26

Kimley»Horn
© 2026 KIMLEY-HORN AND ASSOCIATES, INC.

ARIZONA DEPARTMENT OF TRANSPORTATION
PROJECT DELIVERY AND OPERATIONS DIVISION
PROJECT MANAGEMENT GROUP

SAN SIMON POE
CONDUIT AND CABLE SCHEDULE
SHEET 3 OF 3

ROUTE I-10
MILEPOST
STRUCTURE NO.

F.H.W.A. Arizona Division

STATE	PROJECT NO.	FEDERAL ID NO.	SHEET NO.	TOTAL SHEETS	RECORD DRAWING
ARIZ.	010 CH 383	010-F(238)T	67	200	

LOCATION SAN SIMON PORT OF ENTRY (POE)

TRACS NO. F0728 01C

DWG NO. T-05.12

____ OF____

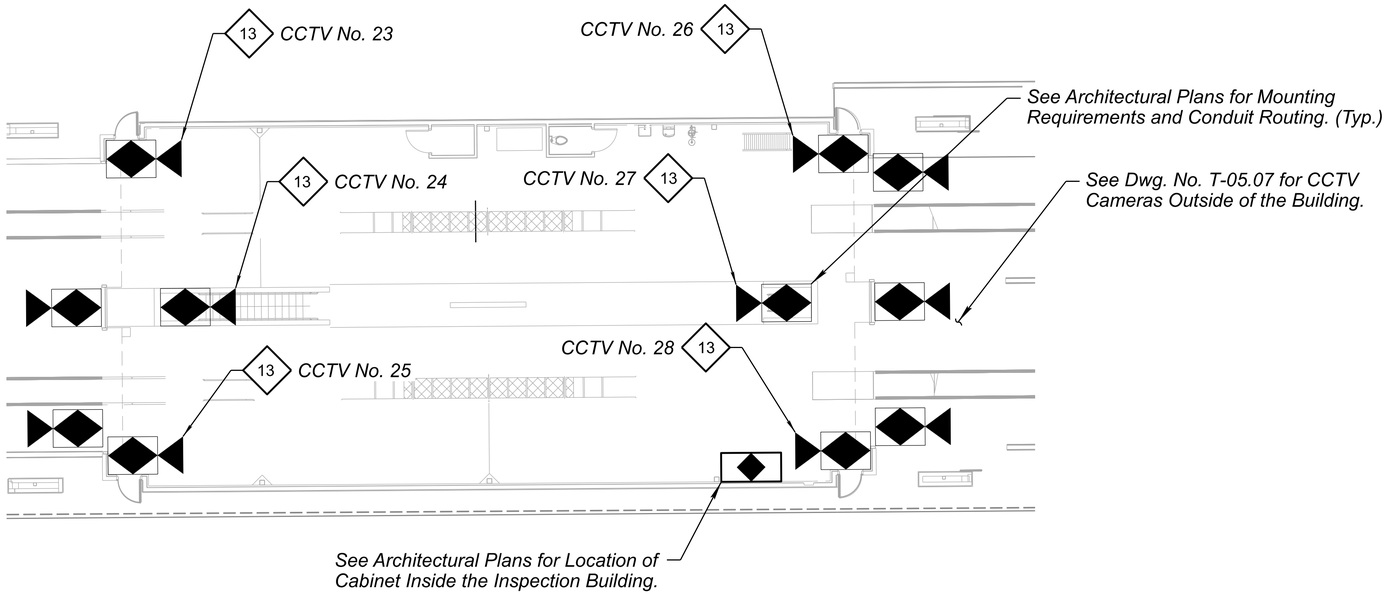



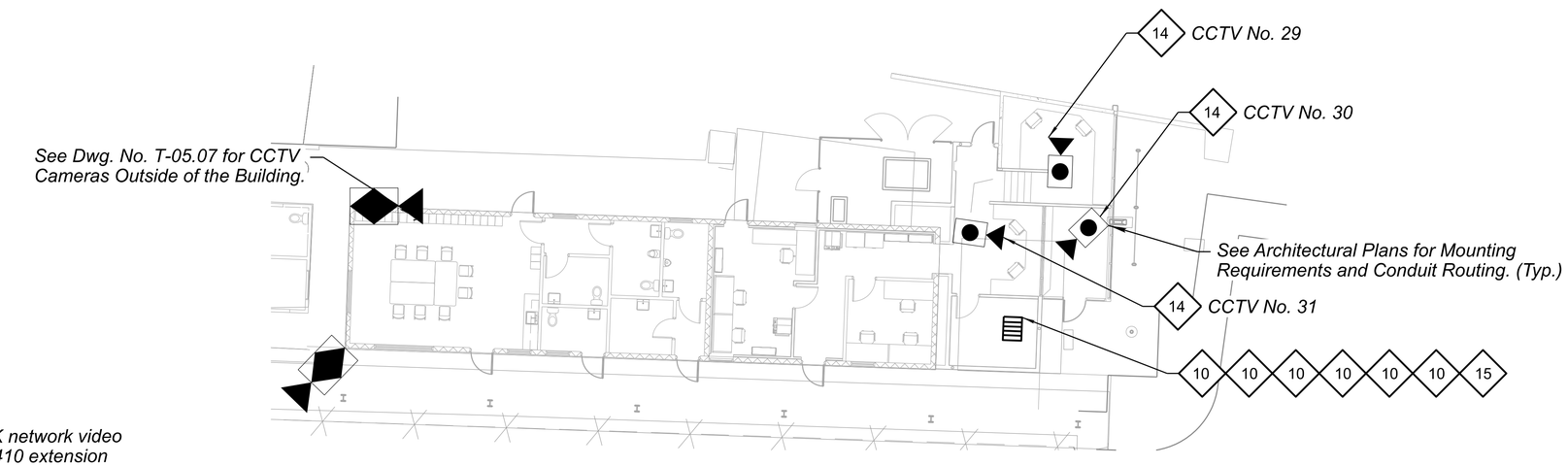

ITS CONSTRUCTION NOTES

10 *Install new media converter.*

13 *Install new WV-X25700-V2LN outdoor dome camera.*

14 *Install new WV-X35402-F2L indoor dome camera.*

15 *Install new WJ-NX510K network video recorder and WK-HXE410 extension unit in new I.T. MDF room.*

Registered Professional Engineer (Civil) CERTIFICATE NO. 80518 RACHEL GRANO Date 8/14/2026

	NAME	DATE
DESIGN	RRG	08/26
DRAWN	EG	08/26
CHECKED	RRG	08/26

Kimley»Horn

© 2026 KIMLEY-HORN AND ASSOCIATES, INC.

ARIZONA DEPARTMENT OF TRANSPORTATION
PROJECT DELIVERY AND OPERATIONS DIVISION
PROJECT MANAGEMENT GROUP

SAN SIMON POE
ITS BUILDING SYSTEM

ROUTE	STATE	PROJECT NO.	FEDERAL ID NO.	SHEET NO.	TOTAL SHEETS	RECORD DRAWING
I-10	ARIZ.	010 CH 383	010-F(238)T	68	200	

MILEPOST

STRUCTURE NO.

F.H.W.A. Arizona Division

LOCATION SAN SIMON PORT OF ENTRY (POE)

DWG NO. T-05.13

TRACS NO. F0728 01C

___ OF___

LIGHTING GENERAL NOTES:

1. All work shall conform to the Arizona Department of Transportation (ADOT) standard specifications for road and bridge construction 2021, ADOT ITD traffic signals and lighting standard drawings, and the special provisions including subsequent addenda prior to bid date.

2. The location of utilities are approximate. The contractor shall be responsible, per section 730-6 of the specifications for contacting all utilities (including AZ811 Center) for the exact locations prior to any construction activity. The contractor is responsible for maintaining proper clearances as required by the utility company and adhering to the requirements stipulated in permits. The contractor shall coordinate all conduit, pull box, and foundation installations with other contractors working within the project limits.

3. The contractor shall coordinate the construction work requirements of the lighting plans with the construction work requirements of the total project plan set(s). The contractor's work shall be installed in a timely and coordinated basis with the other contractors working within the project limits.

4. The plans show the general path and location of the conduit in relation to major physical features. The locations of other utilities and other objects along the conduit path may not be shown in the plans but shall be identified by the contractor as the conduit route is marked just prior to installation. The information on the drawings concerning the type and location of existing underground and overhead utilities is approximate and has not been independently verified. The contractor shall determine the exact location of all existing utilities and shall be fully responsible for any and all damages which might result from the contractor's failure to locate and preserve any and all underground and overhead utilities. Repairing utility facilities damaged by the contractor shall be replaced in kind at no additional cost to the Department.

5. The contractor shall stake all pole foundation, pull box, and conduit locations and obtain approval from the Engineer prior to any excavation or trenching activities.

6. The contractor shall submit a request in writing to the Engineer when field adjustments are necessary to avoid conflict with utilities or construction.

7. Top of pull boxes shall be flush with surrounding final grade elevation(s).

8. Once installed, all luminaires shall be energized for 100 hours before final acceptance in accordance with subsection 732-3.02 of the specifications.

9. The contractor shall place warning tape in all trenches in which new conduit is placed per subsections 732-2.02 and 732-3.01 in the specifications. The cost of the warning tape and installation shall be included in the cost of the conduit and not paid for separately.

10. Material and equipment shall be installed in accordance with the current standards and recommendations of the national electrical code, the national electrical safety code, and with local codes which apply. Where discrepancies arise between codes, the most restrictive regulation shall apply.

11. All roadway luminaires shall be installed with luminaires oriented perpendicular to the roadway centerline referenced on the pole schedule, except for high mast lighting. Luminaires shall be installed level; and be free of dust, dirt, and debris.

12. The contractor shall warranty all work in compliance with subsection 106.13 of the specifications from the date of final acceptance by the Engineer, against defects in workmanship, failure, malfunction of materials and/or equipment. This warranty shall be in writing at the time of issuing final acceptance. Materials and workmanship found to be defective within this warranty period shall be replaced at no additional cost to the Department.

13. The contractor shall contact the utility company for coordination of trench and the installation of conduit. Each conduit shall terminate in each pull box and/or pole foundation.

14. ADOT NO. 4B pull boxes shall be furnished and installed by the contractor at locations as indicated in the roadway lighting plans. Modify ADOT S.S. 1-11 cover lettering from "ADOT Electrical High Voltage" to "Electrical".

15. The contractor shall restore all property, landscaping, paving, and driveways that are disturbed during construction to their original condition in conformance with subsection 107.11 of the specifications.

16. Prior to ordering any materials or doing any work, the contractor shall verify dimensions at the site and immediately report any discrepancies to the Engineer. The contractor shall not proceed with any work until the Engineer renders a decision. No extra changes or compensation will be allowed for the differences in actual dimensions and dimensions indicated on the drawings.

17. The electrical contractor shall comply with all licensing requirements set forth by the state registrar of contractor's office to perform work relating to street light installation in the project right-of-way.

18. All conduit which will not have circuit wire or cable pulled into it during construction shall have detectable mule tape pull wire installed in it and the ends sealed in a utility company approved manner to keep all moisture and foreign matter out of the conduit.

19. All luminaires shall be marked with their lamp wattage ("25L" for 250W LED equivalent) and be white in color for led lamps. These markings shall be clearly visible from the ground.

20. Record drawing requirements shall consist of recording, by the contractor, any change or deviation on a set of approved plans. Plans shall be furnished to the Engineer at the completion of the project. Final payment will not be made until the as built prints are accepted by the Engineer.

21. The contractor shall examine all general construction drawings and visit the construction site to become familiar with existing conditions under which they will operate.

22. All work shown is new and will be installed by the contractor unless otherwise noted.

23. All lighting conduit shall be buried a minimum depth of 36 inches below finished grade.

24. All new type 'G' light poles shall be aluminum.

LIGHTING CONSTRUCTION NOTES:

1. Existing light pole and luminaire to remain. Protect in place.
2. Existing pole and luminaire to be removed for relocation. Foundation to be demoed 2' below grade. Connected conduit to be abandoned in place and conductors to be removed and disposed of.
3. Relocated pole location. Contractor to install new foundation and connect pole and luminaire for a complete system. See pole and conduit & conductor schedules on sheet T-06.03 for details.
4. Pole to be be removed and disposed of. Foundation to be demoed 2' below grade. Luminaire to be salvaged and re-installed on designated lighting pole. Connected conduit to be abandoned in place and conductors to be removed and disposed of.
5. Contractor to install new pole, mast arm, break away base, and luminaire per pole schedule on sheet T-06.03.
6. Contractor to verify existing conduit and conductor sizes, and tie proposed conduit and conductors into system per the conduit and conductor schedule on sheet T-06.04.
7. Contractor to install new No. 4B pull box per ADOT Standard Detail T.S.1-12.
8. Existing panel. Protect in Place.
9. Existing pull box to be removed and disposed of.
10. Existing pull box to be remain. Protect in place.
11. Existing pull box to remain. Tie proposed conduit and conductors into existing pull box per the conduit and conductor schedules on sheet T-06.04 for details.
12. Existing load center service cabinet. Protect in place.

LIGHTING SYMBOLS LEGEND:

- Existing Horizontal Mounted Luminaire
- Proposed Horizontal Mounted Luminaire
- Proposed ADOT NO. 4b Pull box
- Existing Pull Box
- Existing Load Center Cabinet / Meter Pedestal
- Proposed Conduit Run
- Existing Conduit Line (P)
- Existing Overhead Power (OP)
- Construction Callout Note (#)
- New Conduit Callout Note (#)
- Existing Conduit Callout Note (#)
- A = Pole / Luminaire Number
  B = Load Center Identifier
  C = Circuit number
  R = Pole to be Removed
  M = Pole to be Relocated
  (A-R/M, B, C)
- Existing Panel

STREET LIGHTING ABBREVIATIONS:

ADOT	Arizona Department of Transportation
EXST	Existing
LED	Light Emitting Diode
DWG	Drawing
NO.	Number

Registered Professional Engineer (Electrical) — CERTIFICATE NO. 80307 — JACKSON MODRAK — Date Signed 09/22/26 — ARIZONA, U.S.A.

	NAME	DATE
DESIGN	SRT	09/26
DRAWN	SRT	09/26
CHECKED	JDM	09/26

Kimley»Horn
© 2026 KIMLEY-HORN AND ASSOCIATES, INC.

ARIZONA DEPARTMENT OF TRANSPORTATION
PROJECT DELIVERY AND OPERATIONS DIVISION
PROJECT MANAGEMENT GROUP

SAN SIMON POE
GENERAL NOTES

ROUTE I-10
MILEPOST
STRUCTURE NO.

F.H.W.A. Arizona Division	STATE	PROJECT NO.	FEDERAL ID NO.	SHEET NO.	TOTAL SHEETS	RECORD DRAWING
	ARIZ.	010 CH 383	010-F(238)T	69	200	

LOCATION: SAN SIMON PORT OF ENTRY (POE)
DWG NO. T-06.01
TRACS NO. F0728 01C
___ OF ___



	NAME	DATE
DESIGN	SRT	08/26
DRAWN	SRT	08/26
CHECKED	JDM	08/26

Registered Professional Engineer (Electrical) — CERTIFICATE NO. 80307 — JACKSON MODRAK — Date Signed 08/14/26 — ARIZONA USA

Kimley»Horn

© 2025 KIMLEY-HORN AND ASSOCIATES, INC.

ARIZONA DEPARTMENT OF TRANSPORTATION
INFRASTRUCTURE DELIVERY AND OPERATIONS DIVISION
PROJECT MANAGEMENT GROUP

SAN SIMON POE
LIGHTING SHEET

ROUTE I-10
MILEPOST
STRUCTURE NO.

F.H.W.A. Arizona Division	STATE	PROJECT NO.	FEDERAL ID NO.	SHEET NO.	TOTAL SHEETS	RECORD DRAWING
	ARIZ.	010 CH 383	010-F(238)T	70	200	

LOCATION SAN SIMON PORT OF ENTRY (POE)

DWG NO. T-06.02

TRACS NO. F0728 01D

___ OF ___

5:54:13 PM 8/13/2026 Santiago.Tarango K:\PHX_Roadway\Worksets\ADOT_PROJECTS_2022R3_10.12_291728040-F0728-SAN SIMON POE\dgn\Lighting\lf0728_lt01_sansimon.dgn

SAN SIMON PORT OF ENTRY POLE AND LUMINAIRE SCHEDULE

POLE NO.	STATION AND OFFSET		OBJECTIVE	ROADWAY	POLE TYPE	BASE	MOUNTING HEIGHT	MAST ARM LENGTH	CIRCUIT	LUMINAIRE TYPE	FIXTURE QUANTITY	VOLTAGE	CCT	LUMINAIRE DIST. TYPE	NOTES
1	23+23.07	20.47LT	DESTINATION	SAN SIMON CL	EXISTING STL. TYPE G	STL. TYPE G BASE PLATE	35'	20'	2	LED	1	208V	3000K	EXIST	NEW LOCATION OF POLE
1M	20+35.54	21.68LT	MOVE	SAN SIMON CL	EXISTING STL. TYPE G	N/A	35'	20'	2	LED	1	208V	3000K	EXIST	POLE TO BE RELOCATED. POLE #57250
2	25+95.71	46.27LT	DESTINATION	SAN SIMON CL	EXISTING STL. TYPE G	STL. TYPE G BASE PLATE	35'	20'	2	LED	1	208V	3000K	EXIST	NEW LOCATION OF POLE
2M	25+93.67	30.87LT	MOVE	SAN SIMON CL	EXISTING STL. TYPE G	N/A	35'	20'	2	LED	1	208V	3000K	EXIST	POLE TO BE RELOCATED. POLE #57320
3	27.43.39	43.27LT	DESTINATION	SAN SIMON CL	EXISTING STL. TYPE G	STL. TYPE G BASE PLATE	35'	20'	1	LED	1	208V	3000K	EXIST	NEW LOCATION OF POLE
3M	27+42.87	25.98LT	MOVE	SAN SIMON CL	EXISTING STL. TYPE G	N/A	35'	20'	1	LED	1	208V	3000K	EXIST	POLE TO BE RELOCATED. POLE #57330
4	24+79.46	34.00LT	DESTINATION	SAN SIMON CL	EXISTING STL. TYPE G	STL. TYPE G BASE PLATE	35'	20'	2	LED	1	208V	3000K	EXIST	NEW LOCATION OF POLE
4M	25+75.82	54.21RT	MOVE	SAN SIMON CL	EXISTING STL. TYPE G	N/A	35'	20'	2	LED	1	208V	3000K	EXIST	POLE TO BE RELOCATED. POLE #57160
5	24+63.00	52.21RT	DESTINATION	SAN SIMON CL	EXISTING STL. TYPE G	STL. TYPE G BASE PLATE	35'	20'	1	LED	1	208V	3000K	EXIST	NEW LOCATION OF POLE
5M	24+48.56	85.10RT	MOVE	SAN SIMON CL	EXISTING STL. TYPE G	N/A	35'	20'	1	LED	1	208V	3000K	EXIST	POLE TO BE RELOCATED. POLE #57180
6	27+3.77	33+87RT	DESTINATION	SAN SIMON CL	EXISTING STL. TYPE G	STL. TYPE G BASE PLATE	35'	15' DOUBLE	5	LED	2	208V	3000K	EXIST	NEW LOCATION OF POLE
6M	28+83.67	1.71LT	MOVE	SAN SIMON CL	EXISTING STL. TYPE G	N/A	35'	15' DOUBLE	5	LED	2	208V	3000K	EXIST	POLE TO BE RELOCATED. POLE #57020
7	30+34.48	21.13RT	DESTINATION	SAN SIMON CL	EXISTING STL. TYPE G	STL. TYPE G BASE PLATE	35'	15' DOUBLE	4	LED	2	208V	3000K	EXIST	NEW LOCATION OF POLE
7M	30+23.10	2.54LT	MOVE	SAN SIMON CL	EXISTING STL. TYPE G	N/A	35'	15' DOUBLE	4	LED	2	208V	3000K	EXIST	POLE TO BE RELOCATED. POLE #57030
8	32+12.00	24.18LT	NEW	SAN SIMON CL	PROPOSED ALUM. TYPE G	BREAK AWAY ALUM. TYPE 2	35'	20'	6	LED	1	208V	3000K	EXIST	
8R	31+91.75	22.60LT	REMOVE	SAN SIMON CL	EXISTING	N/A	35'	20'	6	LED	1	208V	3000K	EXIST	POLE TO BE REMOVED
9	26+80.32	142.85RT	NEW	SAN SIMON CL	PROPOSED ALUM. TYPE G	BREAK AWAY ALUM. TYPE 2	35'	20'	3	LED	1	208V	3000K	EXIST	
9R	26+84.16	126.92RT	REMOVE	SAN SIMON CL	EXISTING	N/A	35'	20'	3	LED	1	208V	3000K	EXIST	POLE TO BE REMOVED
10	30+61.03	111.76RT	NEW	SAN SIMON CL	PROPOSED ALUM. TYPE G	BREAK AWAY ALUM. TYPE 2	35'	20'	4	LED	1	208V	3000K	EXIST	
10R	30+32.09	98.77RT	REMOVE	SAN SIMON CL	EXISTING	N/A	35'	20'	4	LED	1	208V	3000K	EXIST	POLE TO BE REMOVED

Registered Professional Engineer
CERTIFICATE NO
80307
JACKSON
MODRAK
Date Signed 08/14/26
ARIZONA USA

	NAME	DATE
DESIGN	SRT	08/26
DRAWN	SRT	08/26
CHECKED	JDM	08/26

Kimley»Horn
© 2025 KIMLEY-HORN AND ASSOCIATES, INC.

ARIZONA DEPARTMENT OF TRANSPORTATION
INFRASTRUCTURE DELIVERY AND OPERATIONS DIVISION
PROJECT MANAGEMENT GROUP

SAN SIMON POE
LIGHTING SHEET

ROUTE I-10
MILEPOST
STRUCTURE NO.

F.H.W.A. Arizona Division

STATE	PROJECT NO.	FEDERAL ID NO.	SHEET NO.	TOTAL SHEETS	RECORD DRAWING
ARIZ.	010 CH 383	010-F(238)T	71	200	

LOCATION SAN SIMON PORT OF ENTRY (POE)

DWG NO. T-06.03

TRACS NO. F0728 01D

____ OF____

SAN SIMON PORT OF ENTRY CONDUIT AND CONDUCTOR SCHEDULE																		
	CONDUIT RUN NUMBER	1	2	3	4	5	6	7	8	9	10	11	12	13	14	15	A	S
	CONDUIT TYPE	PVC	PVC	PVC	PVC	PVC	PVC	PVC	PVC	PVC	PVC	PVC	PVC	PVC	PVC	PVC		
	CONDUIT SIZE IN INCHES	2	2	2	1.5	2	2	2	1.5	2	2	1.5	2	1.5	1.5	2		
	EXISTING / NEW CONDUIT	N	N	N	E	N	N	N	E	N	E	E	N	N	E	N		
AWG																	ABANDONED*	SERVICE**
#10	EXISTING FLASHER											2		2				
#12	LIGHTING CKT (PB TO POLE/LIGHT)	2																
	BARE BOND	1																
#6	LIGHTING CKT 01		2	2	2	2												
	LIGHTING CKT 02			2	2		2											
	LIGHTING CKT 03		2					2	2									
	LIGHTING CKT 04									2	2	2	2		2	2		
	LIGHTING CKT 05									2	2				2	2		
	LIGHTING CKT 06									2		2		2	2			
	BARE BOND		1	1	1	1	1	1	1	1	1	1	1	1	1	1		
	ABANDON																	
	SERVICE																	
NOTES:																		

SAN SIMON - CONDUIT & CONDUCTOR SCHEDULE

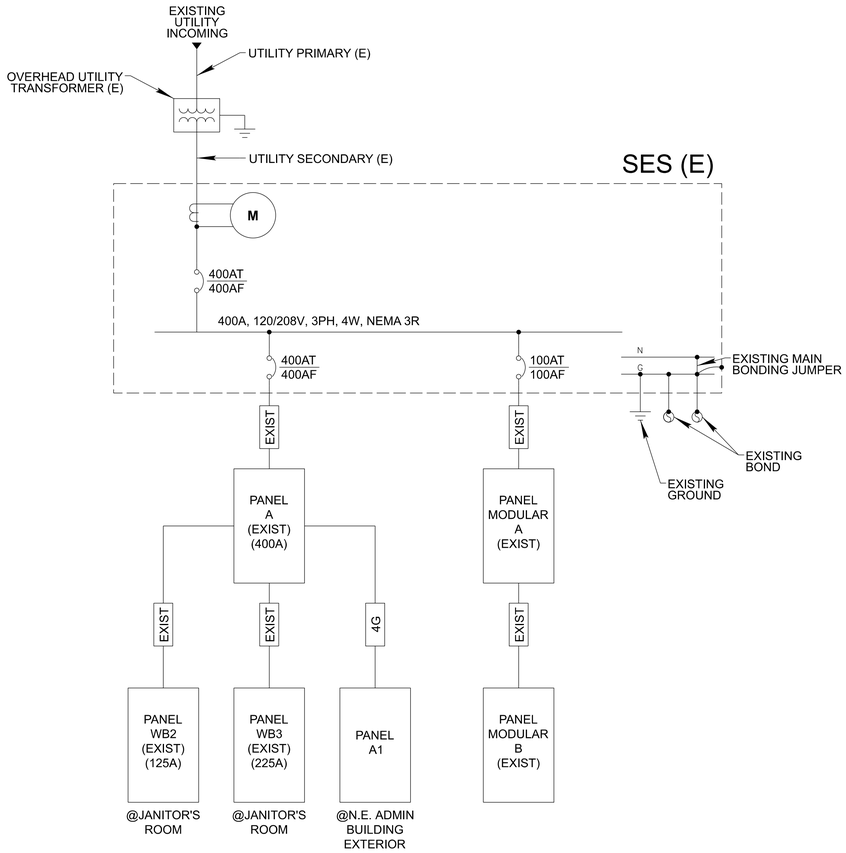

ONE LINE DIAGRAM - ADMIN BUILDING & WEIGH SCALE

LOAD CENTER NO: #####						
LOAD CENTER LOCATION: SAN SIMON						
LOAD CENTER MAINTENANCE NUMBER: #####						
LOAD CENTER TYPE: 120/208 Metered						
LOAD CENTER XFMR SIZE: N/A						
MAIN CIRCUIT BREAKER: 400A/2P						
CIR NO	CK BKR	STATUS	BKR AMPS	CONDUCTOR SIZE	OUTPUT VOLTS	LOAD AMPS
A	1	EXIST	20A	#6	208V	3.37
B	2	EXIST	20A	#6	208V	3.37
C	3	EXIST	20A	#6	208V	5.38
D	4	EXIST	20A	#6	208V	5.38
E	5	EXIST	20A	#6	208V	4.04
F	6	EXIST	20A	#6	208V	4.71
					LOAD AMPS	21.540
					CONTINUOUS LOAD (125%)	5.385
					SERVICE AMPS	26.925
					POWER (kW)	12.92

SAN SIMON - LOAD CENTER TABLE

Registered Professional Engineer (Electrical) CERTIFICATE NO. 80307 JACKSON MODRAK Date Signed 08/14/26 ARIZONA U.S.A.

	NAME	DATE
DESIGN	SRT	08/26
DRAWN	SRT	08/26
CHECKED	JDM	08/26

Kimley»Horn

© 2025 KIMLEY-HORN AND ASSOCIATES, INC.

ARIZONA DEPARTMENT OF TRANSPORTATION
INFRASTRUCTURE DELIVERY AND OPERATIONS DIVISION
PROJECT MANAGEMENT GROUP

SAN SIMON POE
LIGHTING SHEET

ROUTE I-10
MILEPOST
STRUCTURE NO.

F.H.W.A. Arizona Division	STATE	PROJECT NO.	FEDERAL ID NO.	SHEET NO.	TOTAL SHEETS	RECORD DRAWING
	ARIZ.	010 CH 383	010-F(238)T	72	200	

LOCATION SAN SIMON PORT OF ENTRY (POE)

DWG NO. T-06.04

TRACS NO. F0728 01D

____ OF ____

5:54:15 PM 8/13/2026 Santiago.Tarango K:\PHX_Roadway\Worksets\ADOT_PROJECTS_2022R3_10.12_291728040-F0728-SAN SIMON POE\dgn\Lighting\f0728_dt02_sansimon.dgn

DO NOT SCALE DRAWINGS. DO NOT PLOT 'SCALE TO FIT'. THIS DOCUMENT IS FORMATTED FOR THE ANSI D (22"x34") SHEET SIZE.
FULL-SIZE PLOT ON ANSI D (22"x34") PAPER ONLY. HALF-SIZE PLOT ON 11"x17" PAPER ONLY.

STAPLE ZONE

ABBREVIATIONS

@	AT	LF	LINEAR FOOT
#	NUMBER	LLH	LONG LEG HORIZONTAL
&	AND	LLV	LONG LEG VERTICAL
%	PERCENT		
"	INCH(ES)	M.O.	MASONRY OPENING
'	FOOT / FEET	MAX	MAXIMUM
°	DEGREES	MDF	MEDIUM DENSITY FIBERBOARD
>	GREATER THAN	MEP	MECHANICAL, ELECTRICAL, PLUMBING
<	LESS THAN	MPE	MECHANICAL, PLUMBING, ELECTRICAL
≥	GREATER THAN OR EQUAL TO	MECH	MECHANICAL
≤	LESS THAN OR EQUAL TO	MDF	MEDIUM DENSITY FIBERBOARD
±	PLUS-MINUS	MFR	MANUFACTURER
℄	CENTERLINE	MH	MANHOLE
PL	PLATE	MIN	MINIMUM
		MISC	MISCELLANEOUS
A.F.F.	ABOVE FINISH FLOOR	MM	MILLIMETER
ABC	AGGREGATE BASE COURSE	MTL	METAL
AC	AIR CONDITIONING		
ACT	ACOUSTICAL CEILING TILE	N	NORTH
ADA	AMERICANS WITH DISABILITIES ACT	N.I.C.	NOT IN CONTRACT
		N/A	NOT APPLICABLE
AHU	AIR HANDLING UNIT	NFPA	NATIONAL FIRE PROTECTION ASSOCIATION
ALT	ALTERNATE		
ALUM	ALUMINUM	NO.	NUMBER
ANSI	AMERICAN NATIONAL STANDARDS INSTITUTE	NRC	NOISE REDUCTION COEFFICIENT
		NTS	NOT TO SCALE
ARCH	ARCHITECTURAL / ARCHITECT		
ASTM	ASTM INTERNATIONAL	O.C.	ON CENTER
		O.D.	OUTSIDE DIAMETER/DIMENSION
B.O.	BOTTOM OF	OCC	OCCUPANT / OCCUPANCY
B.O.D	BOTTOM OF DECK	OPNG	OPENING
BLDG	BUILDING	OPP / OH	OPPOSITE HAND
		OSB	ORIENTED STRAND BOARD
C.I.P.	CAST-IN-PLACE		
CJ	CONTROL JOINT / CONSTRUCTION JOINT	PERF	PERFORATED
		PL	PLATE
CL	CENTER LINE	PLAM	PLASTIC LAMINATE
CLG	CEILING	PR	PAIR
CLR	CLEAR	PSF	POUNDS PER SQUARE FOOT
CMU	CONCRETE MASONRY UNIT	PVC	POLYVINYL CHLORIDE
CONC	CONCRETE		
CONT.	CONTINUOUS	QTY	QUANTITY
COORD	COORDINATE		
CTR	CENTER	R	RADIUS
		R.D.	ROOF DRAIN
D	DEEP / DEPTH	R.O.	ROUGH OPENING
D.G.	DECOMPOSED GRANITE	R.O.W.	RIGHT OF WAY
DEMO	DEMOLITION	RCP	REFLECTED CEILING PLAN
DEPT	DEPARTMENT	RD	ROOF DRAIN
DF	DRINKING FOUNTAIN	REF	REFRIGERATOR
DIA	DIAMETER	RM	ROOM
DIM	DIMENSION		
DN	DOWN	S	SOUTH
DWG	DRAWING	S.S.	STAINLESS STEEL
		SCHED	SCHEDULE
E	EAST	SF	SQUARE FEET / FOOT
EA	EACH	SHWR	SHOWER
EIFS	EXTERIOR INSULATION AND FINISH SYSTEM	SIM	SIMILAR
		SPEC(S)	SPECIFICATION(S)
EJ	EXPANSION JOINT	SQ	SQUARE
ELEV	ELEVATION / ELEVATOR	STC	SOUND TRANSMISSSION COEFFICIENT
ELEC	ELECTRICAL		
EQ	EQUAL	STD	STANDARD
EQUIP	EQUIPMENT	STL	STEEL
E.T.S.	EXPOSED TO STRUCTURE	STOR	STORAGE
EXP	EXPANSION	STRUC	STRUCTURAL
EXIST	EXISTING		
EXTR	EXTERIOR	T	THERMOSTAT
		T&G	TONGUE AND GROOVE
F.D.	FLOOR DRAIN	T.O.	TOP OF
F.F.E.	FINISH FLOOR ELEVATION	T.O.M.	TOP OF MASONRY
F.O.	FACE OF	TBD	TO BE DETERMINED BY ARCH
FDC	FIRE DEPARTMENT CONNECTION	TEL	TELEPHONE OR TELECOM
		TEMP	TEMPERATURE / TEMPERED
FEC	FIRE EXTINGUISHER CABINET	THRU	THROUGH
FF&E	FURNITURE, FINISHES, & EQUIPMENT	TS	TUBE STEEL
		TV	TELEVISION
FFE	FINISH FLOOR ELEVATION	TYP	TYPICAL
FLR	FLOOR		
FT	FEET	U.N.O.	UNLESS NOTED OTHERWISE
FURN	FURNITURE	UL	UNDERWRITER'S LABORATORY
GA	GAUGE / GAGE	V	VOLTS
GALV	GALVANIZED	V.I.F.	VERIFY IN FIELD
GSF	GROSS SQUARE FEET / FOOT	VERT	VERTICAL
		VTR	VENT-THRU-ROOF
H.B.	HOSE BIB		
H	HIGH / HEIGHT	W	WEST / WIDE / WIDTH
HR(S)	HOUR(S)	W/	WITH
H.S.A.	HEAD STUD ANCHOR(S)	W/O	WITHOUT
HT	HEIGHT	WC	WATER CLOSET
HVAC	HEATING, VENTILATION, & AIR CONDITIONING	WD	WOOD
		WT	WEIGHT
I.D.	INSIDE DIAMETER	WWF	WELDED WIRE FABRIC
IGU	INSULATED GLAZING UNIT		
IN	INCH(ES)		
INFO	INFORMATION		
INTR	INTERIOR		
JAN	JANITOR		
J-BOX	JUNCTION BOX		
L	LONG / LENGTH		
LB(S)	POUND(S)		

DRAWING SYMBOLS

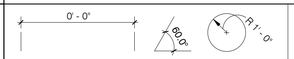

DIMENSION / ANGLE / RADIUS



NORTH ARROW



BUILDING SECTION



WALL SECTION

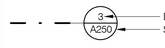

DETAIL REFERENCE



EXTERIOR BUILDING ELEVATION



ELEVATIONS



WALL TYPE IDENTIFICATION

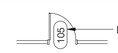

DOOR IDENTIFICATION

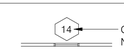

GLAZING SYSTEM TYPE IDENTIFICATION

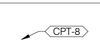

FINISH & MATERIAL IDENTIFICATION MARK



ROOM NAME AND NUMBER



KEYNOTE REFERENCES



ELEVATION / DATUM LEVEL



SPOT ELEVATION TARGET



REVISION

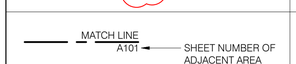

MATCH LINE



SLOPE ARROW


BREAK LINE

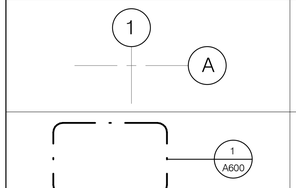

COLUMN GRID LINES

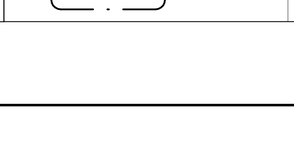

ENLARGED PLAN / DETAIL

PROJECT TEAM

ARCHITECT

GABOR LORANT ARCHITECTS INC.
3326 NORTH 3RD AVENUE, SUITE 200
PHOENIX, ARIZONA 85013
TEL: 602.667.9090 | FAX: 602.667.9133
WWW.GABORLORANT.COM

STRUCTURAL ENGINEER

PK ASSOCIATES, LLC
7434 EAST MCDONALD DRIVE
SCOTTSDALE, ARIZONA 84250
TEL: 480.922.8854
WWW.PKASTRUCTURAL.COM

MPE ENGINEER

APPLIED ENGINEERING
2800 SOUTH RURAL ROAD SUITE 101
TEMPE, ARIZONA 85282
TEL: 480.968.3070
WWW.APPLIEDENGINEERING.WS

CIVIL ENGINEER

KIMLEY-HORN AND ASSOCIATES, INC.
1661 EAST CAMELBACK ROAD, SUITE 400
PHOENIX, ARIZONA 85016
TEL: 602.944.5500
WWW.KIMLEY-HORN.COM

PROJECT SUMMARY

- DEMOLITION OF EXISTING MODULAR BUILDING ON EAST SIDE OF ADMIN BUILDING.
- DEMOLITION OF EXISTING WEIGHMASTER BOOTH ON NORTH SIDE OF ADMIN BUILDING.
- RENOVATION OF EXISTING LOBBY AND PERMIT OFFICE AREAS ON EAST END OF ADMIN BUILDING TO ADD NEW OFFICES AND CIRCULATION SPACE.
- CONSTRUCTION OF AN ADDITION TO THE EAST SIDE OF THE ADMIN BUILDING WITH A NEW WEIGH SCALE, WEIGHMASTER BOOTH, PERMIT OFFICE, LOBBY, AND I.T. ROOM.
- CONSTRUCTION OF A NEW INSPECTION BUILDING WITH (2) INSPECTION BAYS AND BELOW-GRADE PITS.

SPECIAL INSPECTIONS & MATERIALS TESTING

SEE GENERAL STRUCTURAL NOTES FOR REQUIRED INSPECTIONS AND TESTING. THE OWNER WILL PROVIDE THESE SERVICES DURING THE COURSE OF CONSTRUCTION. CONTRACTOR SHALL BE RESPONSIBLE FOR COORDINATING THE SCHEDULING OF ALL TESTING AND INSPECTIONS WITH THE OWNER.

GENERAL NOTES

1. INTERPRETATION OF DRAWINGS AND SPECIFICATIONS: WHERE A CONFLICT ARISES WITHIN OR BETWEEN CONTRACT DOCUMENTS, THE HIGHER QUALITY, THE BETTER WORKMANSHIP, THE MORE COSTLY SOLUTION SHALL GOVERN, UNLESS DIRECTED OTHERWISE BY THE ARCHITECT, WHOSE DECISION SHALL BE FINAL.
2. WORK BY OWNER: ITEMS NOTED 'NIC' OR 'N.I.C.' (NOT IN CONTRACT) WILL BE FURNISHED AND INSTALLED BY THE OWNER. CONTRACTOR SHALL COORDINATE AS NECESSARY WITH THE OWNER FOR THESE ITEMS.

ARIZONA DEPARTMENT OF TRANSPORTATION

SAN SIMON PORT OF ENTRY

MILEPOST 383, INTERSTATE 10, SAN SIMON, AZ 85632

GLA Project Number: 24102

ARIZONA — DEPARTMENT OF — TRANSPORTATION

DRAWING SHEET INDEX

NOTE: SEE SPECIAL PROVISIONS, ITEM NOS. 9240063, 9240066, AND 9240071.

DWG NO.	DRAWING SHEET NAME
1 ARCHITECTURAL	
A001	ARCHITECTURAL COVER SHEET
A010	LIFE SAFETY PLAN & CODE ANALYSIS - ADMIN BUILDING
A015	LIFE SAFETY PLAN & CODE ANALYSIS - INSPECTION BUILDING
A030	DEMOLITION PLANS - ADMIN BUILDING
A070	OVERALL ARCHITECTURAL SITE PLAN
A071	ENLARGED ARCHITECTURAL SITE PLAN
A080	SITE DETAILS
A100	FLOOR PLAN - ANNOTATED - ADMIN BUILDING & WEIGH SCALE
A101	FLOOR PLAN - DIMENSIONED - ADMIN BUILDING & WEIGH SCALE
A102	SLAB PLAN - ADMIN BUILDING & WEIGH SCALE, WEIGH SCALE PIT PLAN & SECTIONS
A105	WEIGH SCALE PIT PLAN, SECTIONS AND DETAILS
A106	WEIGH SCALE PIT DETAILS
A110	FLOOR PLAN - INSPECTION BUILDING
A111	SLAB & CONCRETE WALL PLAN - INSPECTION BUILDING - FINISH FLOOR LEVEL
A112	CONCRETE WALL DETAILS
A120	FLOOR PLAN & SECTIONS - INSPECTION BUILDING - PIT LEVEL
A121	INSPECTION PIT DETAILS
A122	INSPECTION PIT DETAILS
A180	WALL TYPE DETAILS
A181	WALL TYPE DETAILS
A190	WALL FRAMING DETAILS
A200	REFLECTED CEILING PLAN & DETAILS - ADMIN BUILDING
A210	REFLECTED CEILING PLAN & DETAILS - INSPECTION BUILDING
A300	ROOF PLAN - ADMIN BUILDING
A310	ROOF PLAN - INSPECTION BUILDING
A350	ROOF DETAILS
A400	EXTERIOR BUILDING ELEVATIONS - ADMIN BUILDING
A410	EXTERIOR BUILDING ELEVATIONS - INSPECTION BUILDING
A411	COLOR EXTERIOR BUILDING ELEVATIONS - INSPECTION BUILDING
A415	EXTERIOR METAL WALL PANEL DETAILS - INSPECTION BUILDING
A450	BUILDING ENVELOPE DETAILS
A500	BUILDING & WALL SECTIONS - ADMIN BUILDING
A510	BUILDING SECTIONS - INSPECTION BUILDING
A520	WALL SECTIONS - INSPECTION BUILDING
A600	INTERIOR ELEVATION & ENLARGED PLANS - ADMIN BUILDING
A620	INTERIOR DETAILS
A640	ADA & MOUNTING HEIGHT DETAILS
A650	ROOM FINISH SCHEDULE
A651	FINISH & MATERIAL LEGEND
A660	FLOOR FINISH PLANS
A680	SIGNAGE DETAILS
A800	DOOR SCHEDULE - ADMIN BUILDING
A805	DOOR SCHEDULE - INSPECTION BUILDING
A810	DOOR DETAILS
A860	GLAZING SYSTEM DETAILS
A861	GLAZING SYSTEM DETAILS

DRAWING SHEET INDEX

NOTE: SEE SPECIAL PROVISIONS, ITEM NOS. 9240063, 9240066, AND 9240071.

DWG NO.	DRAWING SHEET NAME
2 STRUCTURAL	
S000	GENERAL STRUCTURAL NOTES
S001	GENERAL STRUCTURAL NOTES
S002	GENERAL STRUCTURAL NOTES
S100	FOUNDATION PLAN - ADMIN BUILDING & WEIGH SCALE
S101	ROOF FRAMING PLAN - ADMIN BUILDING
S110	FOUNDATION PLAN - INSPECTION BUILDING PIT LEVEL
S111	FOUNDATION PLAN - INSPECTION BUILDING
S112	ROOF FRAMING PLAN - INSPECTION BUILDING
S200	FOUNDATION DETAILS
S201	FOUNDATION DETAILS
S202	FOUNDATION DETAILS
S203	FOUNDATION DETAILS
S204	FOUNDATION DETAILS
S205	FOUNDATION DETAILS
S300	FRAMING DETAILS
S301	FRAMING DETAILS
S302	FRAMING DETAILS
S400	BRACE FRAME DETAILS
S401	BRACE FRAME DETAILS
S500	TYPICAL DETAILS
S501	TYPICAL DETAILS
S502	TYPICAL DETAILS
S503	TYPICAL DETAILS
S504	TYPICAL DETAILS
S505	TYPICAL DETAILS
3 MECHANICAL	
M00A	MECHANICAL AXONOMETRIC VIEW - INSPECTION BUILDING
M00B	MECHANICAL AXONOMETRIC VIEW - ADMIN BUILDING
M001	MECHANICAL LEGEND, SYMBOLS, AND SPECIFICATIONS
M002	MECHANICAL SCHEDULES AND SPECIFICATIONS
M003	MECHANICAL SCHEDULES AND CONTROL SPECIFICATIONS
M030	MECHANICAL DEMOLITION FLOOR PLAN - ADMIN BUILDING
M100	MECHANICAL FLOOR PLAN - ADMIN BUILDING
M110	MECHANICAL FLOOR PLAN - INSPECTION BUILDING - PIT LEVEL EXHAUST SYSTEMS
M111	MECHANICAL FLOOR PLAN - INSPECTION BUILDING
M210	MECHANICAL ROOF PLAN - INSPECTION BUILDING
M300	MECHANICAL DETAILS
M301	MECHANICAL DETAILS AND OSA VENTILATION CALCULATIONS

DRAWING SHEET INDEX

NOTE: SEE SPECIAL PROVISIONS, ITEM NOS. 9240063, 9240064, 9240068, AND 9240073.

DWG NO.	DRAWING SHEET NAME
4 PLUMBING	
P000	PLUMBING AXONOMETRIC - INSPECTION BUILDING
P001	PLUMBING ABBREVIATIONS & LEGEND
P002	PLUMBING SCHEDULES
P100	SANITARY WASTE FLOOR AND ROOF PLANS - ADMIN BUILDING & WEIGH SCALE
P110	SANITARY WASTE FLOOR PLAN - INSPECTION BUILDING - PIT LEVEL
P111	SANITARY WASTE FLOOR PLAN - INSPECTION BUILDING
P210	DOMESTIC WATER FLOOR PLAN - INSPECTION BUILDING
P310	PLUMBING ROOF PLAN - INSPECTION BUILDING
P400	ISOMETRIC PLAN - SANITARY WASTE & WEIGH SCALE
P410	ISOMETRIC PLAN - DOMESTIC WATER & COMPRESSED AIR
P500	PLUMBING DETAILS
P501	PLUMBING DETAILS
5 ELECTRICAL	
E000	ELECTRICAL COVER SHEET, LEGEND & ABBREVIATIONS
E002	GENERAL NOTES
E003	LIGHTING SPECIFICATIONS & ENERGY CALCULATIONS
E005	EQUIPMENT SCHEDULE
E030	ELECTRICAL DEMOLITION PLANS - ADMIN BUILDING
E070	ELECTRICAL SITE PLAN
E100	POWER PLAN - ADMIN BUILDING ADDITION & WEIGH SCALE
E110	POWER PLANS INSPECTION BUILDING
E210	ROOF POWER PLAN INSPECTION BUILDING
E300	LIGHTING PLAN ADMIN BUILDING ADDITION
E310	LIGHTING PLANS INSPECTION BUILDING
E600	ELECTRICAL ONE LINE DIAGRAM AND SCHEDULES
E700	PANEL SCHEDULES ADMIN BUILDING
E701	PANEL SCHEDULES INSPECTION BUILDING
E800	ELECTRICAL DETAILS
E801	ELECTRICAL DETAILS
E802	ELECTRICAL DETAILS



LOCATION MAP
Not To Scale

NORTH

18924
Z. JAN E. LORANT
Date Signed 06/10/26
REGISTERED ARCHITECT
ARIZONA U.S.A.
EXPIRES 6/30/2027

Issue Date:	10 JULY 2026	
Revisions:	# Description	Date

gabor lorant architects
3326 n. 3rd avenue suite 200
phoenix, arizona 85013
tel: 602.667.9090
fax: 602.667.9133
gaborlorant.com

gla Project No.: 24102

gla

ARIZONA DEPARTMENT OF TRANSPORTATION
PROJECT DELIVERY AND OPERATIONS DIVISION
PROJECT MANAGEMENT GROUP

SAN SIMON PORT OF ENTRY
ARCHITECTURAL COVER SHEET

ROUTE I-10
MILEPOST 383
STRUCTURE NO.

F.H.W.A. Arizona Division	STATE	PROJECT NO.	FEDERAL ID NO.	SHEET NO.	TOTAL SHEETS	RECORD DRAWING
	ARIZ.	010 CH 383	010-F(238)T	73	200	

LOCATION: SAN SIMON PORT OF ENTRY (POE)

TRACS NO. F0728 01C

DWG NO. **A001**
___ OF ___

9/22/2026 3:02:57 PM

DO NOT SCALE DRAWINGS. DO NOT PLOT 'SCALE TO FIT'. THIS DOCUMENT IS FORMATTED FOR THE ANSI D (22"x34") SHEET SIZE.
FULL-SIZE PLOT ON ANSI D (22"x34") PAPER ONLY. HALF-SIZE PLOT ON 11"x17" PAPER ONLY.

STAPLE ZONE

CODE ANALYSIS - ADMIN BUILDING

GENERAL

LOCATION:	MILEPOST 383, INTERSTATE 10, SAN SIMON, AZ 85632
OWNER:	ARIZONA DEPARTMENT OF TRANSPORTATION
BUILDING SF:	EXISTING ADMIN BUILDING: 1,548 SF ENCLOSED (451 SF RENOVATED) NEW ADDITION: 746 SF ENCLOSED SUBTOTAL: 2,294 SF ENCLOSED EXIST. UNDER ROOF OVERHANGS: 1,006 SF NEW UNDER ROOF OVERHANGS 101 SF SUBTOTAL: 3,401 SF EXIST. SERVICE SHADE CANOPY 8,892 SF (UNOCCUPIED) TOTAL: 12,293 SF

APPLICABLE CODES & STANDARDS

2018 INTERNATIONAL BUILDING CODE (IBC)
2018 INTERNATIONAL EXISTING BUILDING CODE (IEBC)
2018 INTERNATIONAL ENERGY CONSERVATION CODE (IECC)
2018 INTERNATIONAL FIRE CODE (IFC)
2018 INTERNATIONAL MECHANICAL CODE (IMC)
2018 INTERNATIONAL PLUMBING CODE (IPC)
2018 INTERNATIONAL FUEL GAS CODE (IFGC)
2017 NFPA 70 - NATIONAL ELECTRIC CODE (NEC)
2010 AMERICANS WITH DISABILITIES ACT ACCESSIBILITY GUIDELINES (ADAAG)
2017 ICC A117.1 ACCESSIBLE AND USABLE BUILDINGS AND FACILITIES
THE ARIZONANS WITH DISABILITIES ACT - AZ ADMINISTRATIVE CODE R10-3-401 THRU R10-3-404
NFPA 72 - FIRE ALARM AND SIGNALING
AMENDMENTS TO ABOVE CODES AND STANDARDS BY THE AUTHORITY HAVING JURISDICTION (AHJ)

OCCUPANCY CLASSIFICATION AND USE (IBC CHAPTER 3)

EXISTING ADMIN BUILDING & ADDITION: GROUP B BUSINESS
EXISTING ADMIN SHADE CANOPY: GROUP S-1 MODERATE-HAZARD STORAGE

BUILDING HEIGHTS AND AREAS (IBC CHAPTER 5)

TYPE OF CONSTRUCTION: V-B NS (NOT SPRINKLERED)

TABLE 504.3:
ALLOWABLE HEIGHT - TYPE V-B: B OCCUPANCY, NOT SPRINKLERED (NS) = 40'
S-1 OCCUPANCY, NOT SPRINKLERED (NS) = 40'
ACTUAL ADMIN BUILDING HEIGHT (B OCCUPANCY) = 15'-4"
ACTUAL ADMIN SHADE CANOPY HEIGHT (S-1 OCCUPANCY) = 16'-11"

TABLE 504.4:
ALLOWABLE NUMBER OF STORIES: B OCCUPANCY, NOT SPRINKLERED (NS) = 2
S-1 OCCUPANCY, NOT SPRINKLERED (NS) = 1
ACTUAL NUMBER OF STORIES - ADMIN BUILDING (B OCCUPANCY) = 1
ACTUAL NUMBER OF STORIES - ADMIN SHADE CANOPY (S-1 OCCUPANCY) = 1

TABLE 506.2:
ALLOWABLE AREA FACTOR: B OCCUPANCY, NOT SPRINKLERED (NS) = 9,000 SF
ALLOWABLE AREA FACTOR: S-1 OCCUPANCY, NOT SPRINKLERED (NS) = 9,000 SF

SECTION 506.2.2 - MIXED-OCCUPANCY, ONE-STORY BUILDINGS:
COMPLY WITH SECTION 508.1 BASED ON EQUATION 5-1 FOR EACH APPLICABLE OCUPANCY.

SECTION 506.3 - FRONTAGE INCREASE:

EQUATION 5-4: $W=(L_1 \times w_1 + L_2 \times w_2 + L_3 \times w_3...)/F$
$W = (81.6x30 + 11.7x30 + 6.2x30 + 7.1x30 + 16.2x30 + 26.0x30 + 9.3x30 + 10.0x30 + 9.8x30 + 69.5x30 + 128.2x30 + 69.5x30 + 23.9x4.5 + 19.3x5.2)/488.3 = 13,560.91/488.3 = 27.8$

EQUATION 5-5: $I_f = [F/P - 0.25]W/30$
$[445.1/488.3 - 0.25]27.8/30 = 0.613$

ALLOWABLE AREA CALCULATIONS - EQUATION 5-1: $A_a = A_t + (NS \times I_f)$
B OCCUPANCY: $A_a = 9,000 + (9,000 \times 0.613) = 9,000 + 5,517 = 14,517$ SF
S-1 OCCUPANCY: $A_a = 9,000 + (9,000 \times 0.613) = 9,000 + 5,517 = 14,517$ SF

SECTION 508.4.2 - ALLOWABLE BUILDING AREA, SEPARATED OCCUPANCIES:

	ACTUAL AREA		ALLOWABLE AREA
B OCCUPANCY:	3,401 SF *	<	14,517 SF
S-1 OCCUPANCY:	8,892 SF	<	14,517 SF

* INCLUDING AREA UNDER OVERHANGS

RATIO CALCULATIONS - ONE-STORY BUILDING:

B OCC. S-1 OCC.
(3,481 / 14,517) + (8,892 / 14,517) = 0.240+0.613 = 0.853

THIS SINGLE STORY BUILDING HAS A RATIO THAT DOES NOT EXCEED 1 AND IS THEREFORE COMPLIANT WITH SECTION 508.4.2.

SECTION 508.4.4 - SEPARATION:
PER TABLE 508.4, NO SEPARATION IS REQUIRED BETWEEN THE B AND S-1 OCCUPANCIES.

FIRE-RESISTANCE RATING REQUIREMENTS FOR BUILDING ELEMENTS (IBC TABLE 601)

TYPE V-B CONSTRUCTION:

PRIMARY STRUCTURAL FRAME	= 0 HOURS
BEARING WALLS - EXTERIOR	= 0 HOURS
BEARING WALLS - INTERIOR	= 0 HOURS
NONBEARING WALLS - EXTERIOR	= N/A
NONBEARING WALLS - INTERIOR	= 0 HOURS
FLOOR CONSTRUCTION	= 0 HOURS
ROOF CONSTRUCTION	= 0 HOUR

FIRE PROTECTION SYSTEM (IBC CHAPTER 9)

GROUP B PROTECTION:

AUTOMATIC SPRINKLER SYSTEM NOT REQUIRED AND NOT PROVIDED.

GROUP S-1 PROTECTION (IBC 903.2.9):

AUTOMATIC SPRINKLER SYSTEM NOT REQUIRED AND NOT PROVIDED - THE FIVE (5) CONDITIONS ARE NOT APPLICABLE.

MEANS OF EGRESS (IBC CHAPTER 10)

OCCUPANT LOAD (TABLE 1004.5):

ADMIN BUILDING - B OCCUPANCY - FUNCTION OF SPACE:

BUS. AREAS	1,083 SF / 150 GSF PER OCC. =	8 OCC.
BUS. AREA - ACCESSORY ASSEMBLY	118 SF / 7 NSF PER OCC. =	17 OCC.
BUS. AREAS - EXISTING	589 SF / 150 GSF PER OCC. =	4 OCC.
BUS. AREA - EXIST. - ACCESS. ASSEMB.	504 SF / 15 NSF PER OCC. =	34 OCC.
TOTALS =	2,294 SF	63 OCC.

NUMBER OF EXITS AND EXIT ACCESS DOORWAYS (TABLE 1006.2.1):

B OCCUPANCY, 49 OCC. OR LESS = 1 EXIT / EXIT ACCESS DOORWAY REQUIRED IN SPACE
NO SPACES OVER 49 OCCUPANTS IN BUILDING AND AT LEAST 1 EXIT DOOR PROVIDED FROM EACH SPACE. 8 EXIT DOORS TOTAL PROVIDED FROM BUILDING.
S-1 OCCUPANCY, 29 OCC. OR LESS = 1 EXIT / EXIT ACCESS DOORWAY REQUIRED IN SPACE
NOT APPLICABLE SINCE THIS OCCUPANCY IS ALL OUTSIDE

EXIT ACCESS TRAVEL DISTANCE (TABLE 1017.2):

B OCCUPANCY, NOT SPRINKLERED (NS) = 200 FEET MAX REQUIRED
MAXIMUM ACTUAL TRAVEL DISTANCE = 67 FEET
S-1 OCCUPANCY, NOT SPRINKLERED (NS) = 200 FEET MAX REQUIRED
NOT APPLICABLE SINCE THIS OCCUPANCY IS ALL OUTSIDE

BUILDING THERMAL ENVELOPE REQUIREMENTS (IECC CHAPTER 4)

CLIMATE ZONE: 3, ALL OTHER

OPAQUE THERMAL ENVELOPE INSULATION COMPONENT MINIMUM REQUIREMENTS, R-VALUE METHOD (TABLE C402.1.3):

ROOFS:
R-38 TOTAL REQUIRED WHEN NOT CONTINUOUS ENTIRELY ABOVE ROOF DECK
R-8.5 CONTINUOUS INSULATION (CI) TO BE INSTALLED ENTIRELY ABOVE ROOF DECK
9" R-30 BATT INSULATION TO BE INSTALLED BELOW ROOF DECK

WALLS (ABOVE GRADE):
METAL FRAMED: R-13 + R-7.5 CONTINUOUS INSULATION (CI) REQUIRED
6" R-19 BATT INSULATION TO BE INSTALLED IN METAL STUD FRAMED WALLS WITH 1.5" R-9.3 CONTINUOUS POLYISO INSULATION TO BE INSTALLED ON EXTERIOR SIDE OF METAL STUD FRAMED WALLS

WALLS (BELOW GRADE): NOT APPLICABLE

FLOORS: NOT APPLICABLE

SLAB-ON-GRADE FLOORS - UNHEATED SLABS: NO REQUIREMENT

BUILDING THERMAL ENVELOPE FENESTRATION REQUIREMENTS (TABLE C402.5):

FIXED VERTICAL FENESTRATION - MAXIMUM U-FACTOR = 0.45

ENTRANCE DOORS - MAXIMUM U-FACTOR = 0.77
ALUMINUM STOREFRONT SYSTEM SPECIFIED IS THERMALLY BROKEN WITH A U-FACTOR OF 0.34 AND IS TO BE INSTALLED FOR BOTH VERTICAL FENESTRATION AND ENTRANCE DOORS. INSULATED GLAZING WITH A U-FACTOR OF 0.29 IS SPECIFIED FOR ALL ALUMINUM STOREFRONT SYSTEMS AND DOORS.

INSULATED GLAZING - MAXIMUM SHGC = 0.25 FOR FIXED GLAZING
INSULATED GLAZING SPECIFIED HAS A 0.23 SHGC

MAXIMUM AREA OF VERTICAL FENESTRATION (PER SECTION C402.5.1) = 30%
TOTAL ABOVE-GRADE WALL AREA = 3,160 SF
TOTAL VERTICAL FENESTRATION AREA = 569 SF
18% OF WALL AREA IS FENESTRATION WHICH IS LESS THAN THE 30% MAXIMUM ALLOWED

OPAQUE DOOR THERMAL ENVELOPE ASSEMBLY MAXIMUM REQUIREMENTS (TABLE C402.1.2):

OPAQUE SWINGING DOORS - MAXIMUM U-FACTOR = 0.37
HOLLOW METAL DOORS ARE INSULATED WITH POLYURETHANE AND HAVE A SPECIFIED U-FACTOR OF 0.36.

REQUIRED PLUMBING FIXTURES (IBC TABLE 2902.1)

ADMIN BUILDING	WATER CLOSETS		LAVATORIES		DRINKING FOUNTAINS	SERVICE SINKS
REQUIRED FIXTURES:	MALE	FEMALE	MALE	FEMALE		
OCCUP. & CLASSIF.: B - BUSINESS DESC.: OFFICE & SERVICE USES TOTAL OCC.: 63 (32 MALE, 32 FEMALE)	1 PER 25 FOR FIRST 50 AND 1 PER 50 FOR REMAINDER		1 PER 40 FOR FIRST 80 AND 1 PER 80 FOR REMAINDER		1 PER 100	1
ADMIN BLDG REQ'D FIXTURES (FRACTIONAL):	32/25 = 1.28	32/25 = 1.28	32/40 = 0.80	32/40 = 0.80	63/100 = 0.63	---
FROM INSPECTION BUILDING (FRACTIONAL):	11/100 = 0.11	11/100 = 0.11	11/100 = 0.11	11/100 = 0.11	21/1000 = 0.021	---
TOTAL REQUIRED FIXTURES (FRACTIONAL):	1.39	1.39	0.91	0.91	0.651	---
TOTAL REQUIRED FIXTURES (WHOLE NUMBER):	2	2	2	2	1	1
TOTAL FIXTURES PROVIDED: (EXISTING FIXTURES LOCATED WITHIN 500' AT ADMIN BLDG AND MODULAR OFFICE BLDG)	2 WC + 2 URINAL (IN ADMIN BLDG)	2 WC (IN ADMIN BLDG)	2 (IN ADMIN BLDG)	2 (IN ADMIN BLDG)	1 (IN NEW INSPECTION BLDG)	1 (EXISTING IN ADMIN BLDG)
	1 UNISEX WC (IN MODULAR OFFICE BLDG)		1 UNISEX (IN MODULAR OFFICE BLDG)			

LIFE SAFETY PLAN LEGEND

3-HOUR FIRE BARRIER W/ 3-HOUR OPENING PROTECTION
2-HOUR FIRE BARRIER W/ 90-MINUTE OPENING PROTECTION
1-HOUR FIRE BARRIER W/ 45-MINUTE OPENING PROTECTION
A.E.D. AUTOMATED EXTERNAL DEFIBRILLATOR
F.E.C. FIRE EXTINGUISHER CABINET

AREA OF SPACE *(IN SQUARE FEET)*
OCCUPANT LOAD FACTOR *(IN SQUARE FEET PER OCCUPANT)*
OCCUPANT LOAD *(IN NUMBER OF OCCUPANTS)*
000 SF
000 SF/OCC
O.L. = 000
OCCUPANT LOAD TAG

EGRESS COMPONENT TYPE
EGRESS COMPONENT CLEAR WIDTH *(IN INCHES)*
EGRESS CAPACITY FACTOR *(IN INCHES)*
EGRESS COMPONENT CAPACITY *(IN NUMBER OF OCCUPANTS)*
ACTUAL OCCUPANT LOAD *(IN NUMBER OF OCCUPANTS)*

DOOR	
WIDTH	42"
C.F.	0.3"
O.L.C.	140
A.O.L.	3

MEANS OF EGRESS COMPONENT TAG
TYPES INCLUDE:
- *DOOR*
- *STAIRWAY*
- *EXIT DOOR*
- *EXIT STAIRWAY*
- *EXIT PASSAGEWAY*

LENGTH OF PATH
000'-00"
PATH A
PATH B
PATH C
EXIT ACCESS PATH OF TRAVEL

OCCUPANCY TYPE LEGEND

- B - BUSINESS - 150 GSF/OCC
- B - BUSINESS - ACCESSORY ASSEMBLY - W/O FIXED SEATS CONCENTRATED (CHAIRS ONLY) - 7 NSF/OCC
- B - BUSINESS (EXISTING) - 150 GSF/OCC
- B - BUSINESS (EXISTING) - ACCESSORY ASSEMBLY - W/O FIXED SEATS CONCENTRATED (CHAIRS ONLY) - 7 NSF/OCC
- B - BUSINESS (EXISTING) - ACCESSORY ASSEMBLY - W/O FIXED SEATS UNCONCENTRATED (TABLES & CHAIRS) - 15 NSF/OCC
- S-1 - MODERATE-HAZARD STORAGE (EXISTING) - 300 GSF/OCC

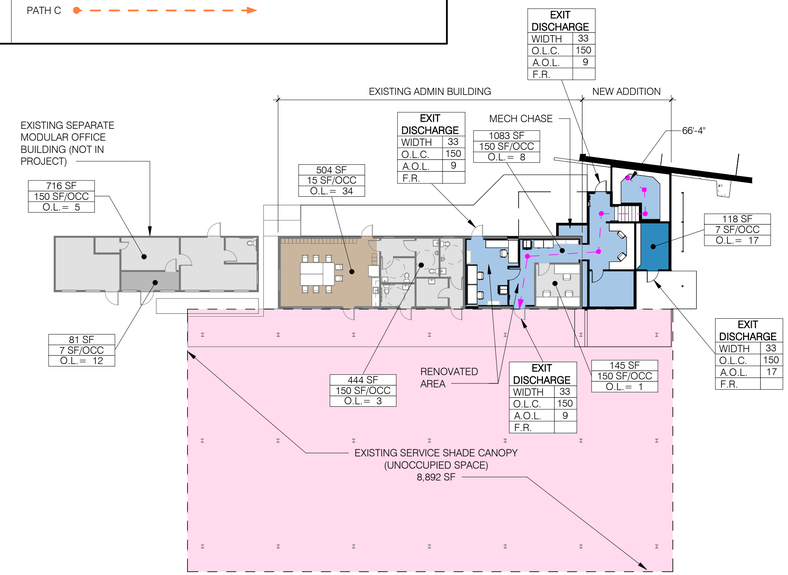

1 LIFE SAFETY PLAN - ADMIN BUILDING
1" = 20'-0"

PLAN NORTH NORTH

GABOR LORANT ARCHITECT
18924
Z. JAN E.
LORANT
Date Signed 07/10/26
ARIZONA U.S.A.
EXPIRES 6/30/2027

Issue Date:	10 JULY 2026	
Revisions:	# Description	Date

gabor lorant architects
3326 n. 3rd avenue suite 200
phoenix, arizona 85013
tel: 602.667.9090
fax: 602.667.9133
gaborlorant.com
gla Project No.: 24102

ARIZONA DEPARTMENT OF TRANSPORTATION
PROJECT DELIVERY AND OPERATIONS DIVISION
PROJECT MANAGEMENT GROUP

SAN SIMON PORT OF ENTRY
LIFE SAFETY PLAN & CODE ANALYSIS - ADMIN BUILDING

ROUTE I-10
MILEPOST 383
STRUCTURE NO.

F.H.W.A. Arizona Division	STATE	PROJECT NO.	FEDERAL ID NO.	SHEET NO.	TOTAL SHEETS	RECORD DRAWING
	ARIZ.	010 CH 383	010-F(238)T	74	200	

LOCATION: SAN SIMON PORT OF ENTRY (POE)
DWG NO. A010
TRACS NO. F0728 01C
___ OF ___

9/22/2026 3:02:58 PM

DO NOT SCALE DRAWINGS. DO NOT PLOT 'SCALE TO FIT'. THIS DOCUMENT IS FORMATTED FOR THE ANSI D (22"x34") SHEET SIZE.
FULL-SIZE PLOT ON ANSI D (22"x34") PAPER ONLY. HALF-SIZE PLOT ON 11"x17" PAPER ONLY.

STAPLE ZONE

CODE ANALYSIS - INSPECTION BUILDING

GENERAL

LOCATION:	MILEPOST 383, INTERSTATE 10, SAN SIMON, AZ 85632
OWNER:	ARIZONA DEPARTMENT OF TRANSPORTATION
BUILDING SF:	MAIN LEVEL: 4,940 SF ENCLOSED PIT LEVEL: 1,047 SF ENCLOSED UNDER ROOF OVERHANGS: 1,637 SF UNDER ROOF OVERHANGS 7,624 SF TOTAL

APPLICABLE CODES & STANDARDS

2018 INTERNATIONAL BUILDING CODE (IBC)
2018 INTERNATIONAL EXISTING BUILDING CODE (IEBC)
2018 INTERNATIONAL ENERGY CONSERVATION CODE (IECC)
2018 INTERNATIONAL FIRE CODE (IFC)
2018 INTERNATIONAL MECHANICAL CODE (IMC)
2018 INTERNATIONAL PLUMBING CODE (IPC)
2018 INTERNATIONAL FUEL GAS CODE (IFGC)
2017 NFPA 70 - NATIONAL ELECTRIC CODE (NEC)
2010 AMERICANS WITH DISABILITIES ACT ACCESSIBILITY GUIDELINES (ADAAG)
2017 ICC A117.1 ACCESSIBLE AND USABLE BUILDINGS AND FACILITIES
THE ARIZONANS WITH DISABILITIES ACT - AZ ADMINISTRATIVE CODE R10-3-401 THRU R10-3-404
NFPA 72 - FIRE ALARM AND SIGNALING
AMENDMENTS TO ABOVE CODES AND STANDARDS BY THE AUTHORITY HAVING JURISDICTION (AHJ)

OCCUPANCY CLASSIFICATION AND USE (IBC CHAPTER 3)

STORAGE GROUP S-1, MODERATE HAZARD

BUILDING HEIGHTS AND AREAS (IBC CHAPTER 5)

TYPE OF CONSTRUCTION: II-B NS (NOT SPRINKLERED)

TABLE 504.3:
ALLOWABLE HEIGHT - TYPE II-B: S-1 OCCUPANCY, NOT SPRINKLERED (NS) = 55'
ACTUAL BUILDING HEIGHT = 27'-6"

TABLE 504.4:
ALLOWABLE NUMBER OF STORIES: S-1 OCCUPANCY, NOT SPRINKLERED (NS) = 2
ACTUAL NUMBER OF STORIES = 1

TABLE 506.2:
ALLOWABLE AREA FACTOR: S-1 OCCUPANCY, NOT SPRINKLERED (NS) = 17,500 SF
ACTUAL BUILDING AREA = 7,624 SF WITH ROOF OVERHANGS

FIRE-RESISTANCE RATING REQUIREMENTS FOR BUILDING ELEMENTS (IBC TABLE 601)

TYPE II-B CONSTRUCTION:

PRIMARY STRUCTURAL FRAME	= 0 HOURS
BEARING WALLS - EXTERIOR	= 0 HOURS
BEARING WALLS - INTERIOR	= 0 HOURS
NONBEARING WALLS - EXTERIOR	= N/A
NONBEARING WALLS - INTERIOR	= 0 HOURS
FLOOR CONSTRUCTION	= 0 HOURS
ROOF CONSTRUCTION	= 0 HOUR

FIRE PROTECTION SYSTEM (IBC CHAPTER 9)

GROUP S-1 PROTECTION (IBC 903.2.9):

AUTOMATIC SPRINKLER SYSTEM NOT REQUIRED AND NOT PROVIDED - THE FIVE (5) CONDITIONS ARE NOT APPLICABLE.

MEANS OF EGRESS (IBC CHAPTER 10)

OCCUPANT LOAD (TABLE 1004.5):

S-1 OCCUPANCY - FUNCTION OF SPACE:
MECH. EQPM. ROOM - MAIN LEVEL 4,940 SF / 300 GSF PER OCC. = 17 OCCUPANTS
MECH. EQPM. ROOM - PIT LEVEL 1,047 SF / 300 GSF PER OCC. = 4 OCCUPANTS
TOTAL = 21 OCCUPANTS

NUMBER OF EXITS AND EXIT ACCESS DOORWAYS (TABLE 1006.2.1):

S-1 OCCUPANCY, 29 OCC. OR LESS = 1 EXIT / EXIT ACCESS DOORWAY REQUIRED
4 EXIT DOORS PROVIDED

EXIT ACCESS TRAVEL DISTANCE (TABLE 1017.2):

S-1 OCCUPANCY, NOT SPRINKLERED (NS) = 200 FEET MAX REQUIRED
175 FEET ACTUAL

BUILDING THERMAL ENVELOPE REQUIREMENTS (IECC CHAPTER 4)

CLIMATE ZONE: 3, ALL OTHER

OPAQUE THERMAL ENVELOPE INSULATION COMPONENT MINIMUM REQUIREMENTS, R-VALUE METHOD (TABLE C402.1.3):

ROOFS:
R-25 CONTINUOUS INSULATION (C.I.) REQUIRED
DUE TO THIS FACILITY BEING A VEHICLE GARAGE WHERE THE GARAGE DOORS WILL TYPICALLY BE OPEN WHEN OCCUPIED, AND THE BUILDING BEING EVAPORATIVE COOLED, LESS INSULATION IS BEING PROVIDED THAN REQUIRED. WHEN COOLING, A HIGH LEVEL OF INSULATION IS INEFFECTIVE SINCE THE EVAPORATIVE COOLERS ARE CONSTANTLY DRAWING IN OUTSIDE AIR. 1" POLYISO INSULATION BOARD (APPROX. R-6.0) + 1/2" POLYISO COVER BOARD (R-2.5) IS TO BE INSTALLED ENTIRELY ABOVE ROOF DECK, FOR A TOTAL MINIMUM R-8.5 VALUE.

WALLS (ABOVE GRADE):
METAL FRAMED: R-13 + R-7.5 C.I. REQUIRED
R-19 THERMAL BATT INSULATION PROVIDED IN WALLS, NO CONTINUOUS INSULATION PROVIDED - SAME JUSTIFICATION AS FOR ROOF IN REDUCING THE INSULATION VALUE.

WALLS (BELOW GRADE): NOT APPLICABLE

FLOORS: NOT APPLICABLE

SLAB-ON-GRADE FLOORS - UNHEATED SLABS: NO REQUIREMENT

BUILDING THERMAL ENVELOPE FENESTRATION REQUIREMENTS (TABLE C402.4):

FIXED VERTICAL FENESTRATION - MAXIMUM U-FACTOR = 0.46
NOT APPLICABLE - NO VERTICAL FENESTRATION IN BUILDING

INSULATED GLAZING - MAXIMUM SHGC = 0.25 SEW AND 0.33 N FOR FIXED GLAZING
NOT APPLICABLE - NO GLAZING

MAXIMUM AREA OF VERTICAL FENESTRATION (PER SECTION C402.5.1) = 30%
NOT APPLICABLE - NO VERTICAL FENESTRATION

OPAQUE DOOR THERMAL ENVELOPE ASSEMBLY MAXIMUM REQUIREMENTS (TABLE C402.1.2):

OPAQUE SWINGING DOORS - MAXIMUM U-FACTOR = 0.61
U-FACTOR OF SPECIFIED HOLLOW METAL DOORS INSULATED WITH POLYURETHANE = 0.36

GARAGE DOORS <14% GLAZING - MAXIMUM U-FACTOR = 0.31
SPECIFIED OVERHEAD COILING DOORS HAVE A U-FACTOR OF 0.13

REQUIRED PLUMBING FIXTURES (IBC TABLE 2902.1)

INSPECTION BUILDING	WATER CLOSETS		LAVATORIES		DRINKING FOUNTAINS	SERVICE SINKS
REQUIRED FIXTURES:	MALE	FEMALE	MALE	FEMALE		
OCCUP. & CLASSIF.: S-1 - STORAGE DESC.: VEHICULAR INSPECTION GARAGE TOTAL OCC.: 21 (11 MALE, 11 FEMALE)	1 PER 100		1 PER 100		1 PER 1,000	1
TOTAL REQUIRED FIXTURES (FRACTIONAL):	11/100 = 0.11	11/100 = 0.11	11/100 = 0.11	11/100 = 0.11	21/1000 = 0.021	---
TOTAL REQUIRED FIXTURES (WHOLE NUMBER):	1	1	1	1	1	1
TOTAL FIXTURES PROVIDED: (EXISTING FIXTURES LOCATED WITHIN 500' AT ADMIN BLDG AND MODULAR OFFICE BLDG)	2 WC + 2 URINAL (IN ADMIN BLDG)	2 WC (IN ADMIN BLDG)	2 (IN ADMIN BLDG)	2 (IN ADMIN BLDG)	1 (NEW IN INSPECTION BLDG)	1 (EXISTING IN ADMIN BLDG)
	1 UNISEX WC (IN MODULAR OFFICE BLDG)		1 UNISEX (IN MODULAR OFFICE BLDG)			

LIFE SAFETY PLAN LEGEND

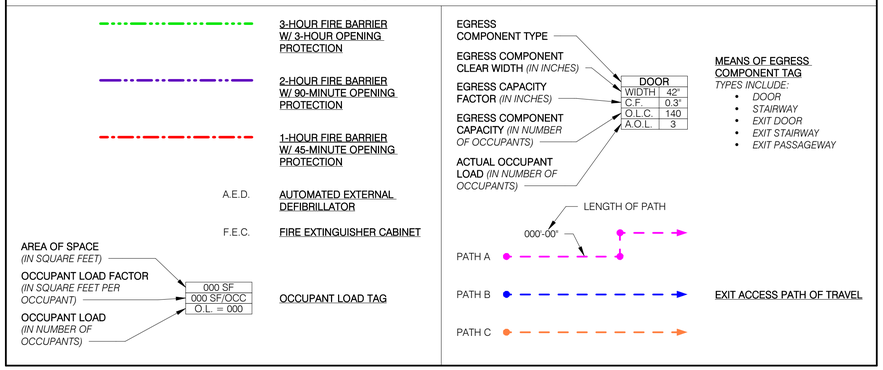

OCCUPANCY TYPE LEGEND

S-1 - MODERNATE-HAZARD STORAGE - 300 GSF/OCC

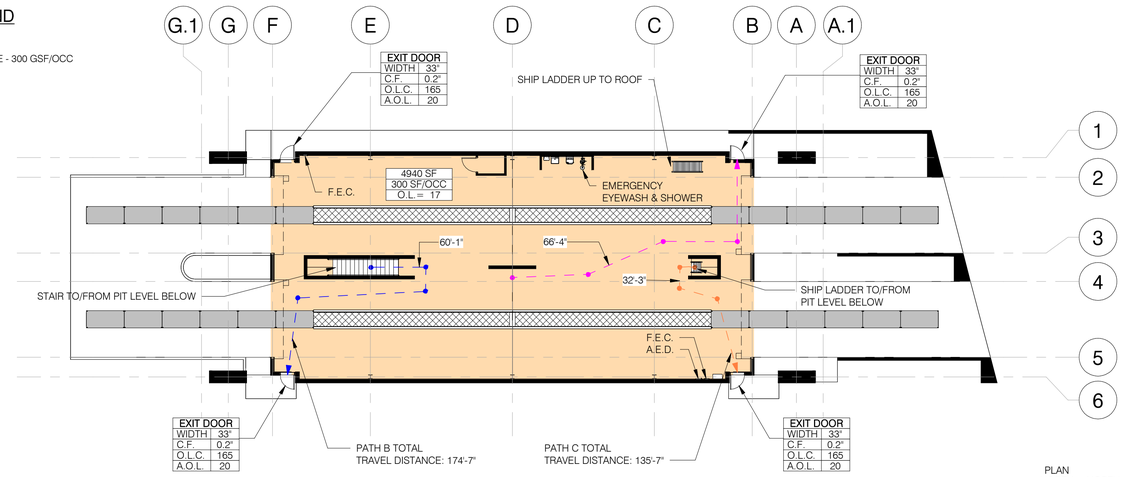

1 LIFE SAFETY PLAN - INSPECTION BUILDING - MAIN LEVEL
1/16" = 1'-0"

PLAN NORTH NORTH

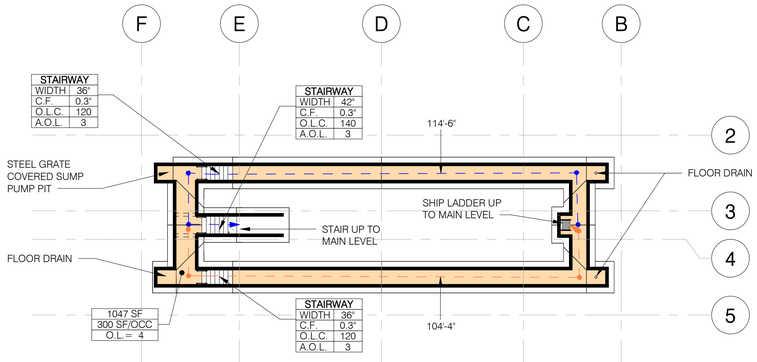

2 LIFE SAFETY PLAN - INSPECTION BUILDING - PIT LEVEL
1/16" = 1'-0"

PLAN NORTH NORTH

18924
Z. JAN E. LORANT
Date Signed 07/10/26
ARIZONA U.S.A.
EXPIRES 6/30/2027

Issue Date:	10 JULY 2026	
Revisions:	# Description	Date

gabor lorant architects
3326 n. 3rd avenue suite 200
phoenix, arizona 85013
tel: 602.667.9090
fax: 602.667.9133
gaborlorant.com

gla Project No.: 24102

gla

ARIZONA DEPARTMENT OF TRANSPORTATION
PROJECT DELIVERY AND OPERATIONS DIVISION
PROJECT MANAGEMENT GROUP

SAN SIMON PORT OF ENTRY
LIFE SAFETY PLAN & CODE ANALYSIS - INSPECTION BUILDING

ROUTE I-10
MILEPOST 383
STRUCTURE NO.

F.H.W.A. Arizona Division	STATE	PROJECT NO.	FEDERAL ID NO.	SHEET NO.	TOTAL SHEETS	RECORD DRAWING
	ARIZ.	010 CH 383	010-F(238)T	75	200	

LOCATION: SAN SIMON PORT OF ENTRY (POE)

TRACS NO. F0728 01C

DWG NO. **A015**

___ OF ___

9/22/2026 3:02:59 PM

DO NOT SCALE DRAWINGS. DO NOT PLOT SCALE TO FIT. THIS DOCUMENT IS FORMATTED FOR THE ANSI D (22"x34") SHEET SIZE.
FULL-SIZE PLOT ON ANSI D (22"x34") PAPER ONLY. HALF-SIZE PLOT ON 11"x17" PAPER ONLY.

STAPLE ZONE

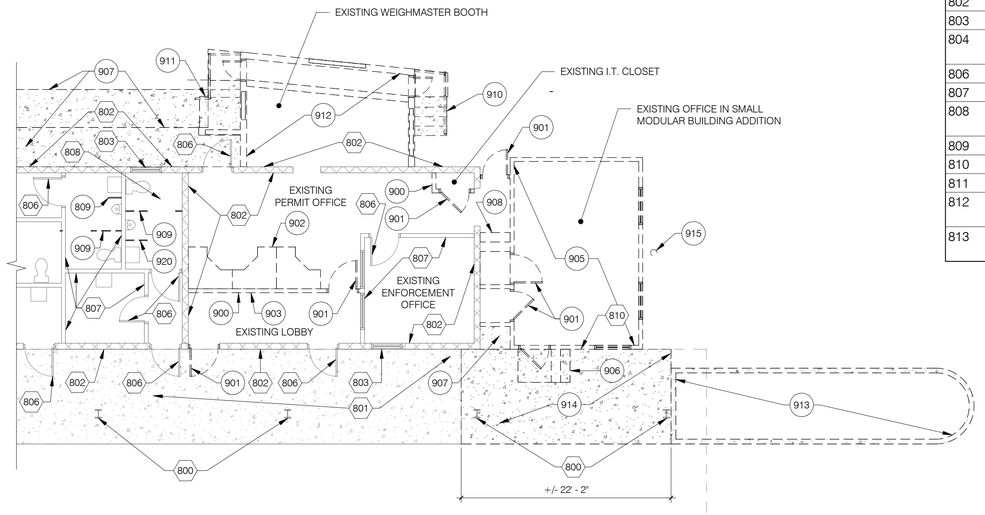

1 DEMOLITION FLOOR PLAN - ADMIN BUILDING
1/8" = 1'-0"

PLAN NORTH / NORTH

KEYNOTES - EXISTING

800	EXISTING STEEL COLUMN TO REMAIN
801	EXISTING CONCRETE SLAB TO REMAIN
802	EXISTING MASONRY WALL TO REMAIN
803	EXISTING WINDOW FRAME TO REMAIN
804	EXISTING SUSPENDED ACOUSTIC TILE CEILING AND LIGHT FIXTURES TO REMAIN
806	EXISTING DOOR AND FRAME TO REMAIN
807	EXISTING FRAMED WALL TO REMAIN
808	ALL EXISTING PLUMBING FIXTURES AND TOILET ACCESSORIES IN THIS ROOM TO REMAIN
809	EXISTING URINAL SCREEN TO REMAIN
810	EXISTING STEEL SHADE CANOPY TO REMAIN IN ITS ENTIRETY
811	EXISTING ROOF OVERHANG TO REMAIN
812	EXISTING CEILING AND CEILING-MOUNTED ITEMS (INCLUDING LIGHT FIXTURES) TO REMAIN
813	EXISTING ROOF TO REMAIN - PATCH AS NECESSARY (TO MATCH EXISTING) DUE TO WORK

GENERAL NOTES - DEMOLITION

1. THE DRAWINGS HAVE BEEN DEVELOPED FROM EXISTING DRAWINGS MADE AVAILABLE TO THE ARCHITECT. PRIOR TO BIDDING, CONTRACTOR SHALL VERIFY THE ACCURACY OF THESE DRAWINGS IN COMPARISON TO ACTUAL FIELD CONDITIONS AND NOTIFY THE ARCHITECT IN WRITING OF CONFLICTING OR INACCURATE FIELD CONDITIONS IMPACTING THE WORK.
2. THESE DRAWINGS ARE DIAGRAMMATIC ONLY. DO NOT SCALE THE DRAWINGS TO DETERMINE THE SCOPE OF DEMOLITION.
3. FIELD VERIFY ACTUAL DIMENSIONS OF ALL EXISTING OPENINGS TO RECEIVE NEW DOORS, DOOR FRAMES, WINDOW FRAMES, OR STOREFRONT SYSTEMS PRIOR TO FABRICATION. NOTIFY ARCHITECT IN WRITING SHOULD ACTUAL DIMENSIONS DIFFER FROM THE DIMENSIONS SHOWN IN THESE DRAWINGS.
4. ALL COMPONENTS AND SYSTEMS THAT ARE DESCRIBED TO BE REMOVED SHALL BE REMOVED TO THE FULLEST EXTENT REQUIRED TO COMPLETE THE WORK.
5. EQUIPMENT, MATERIALS, OR ITEMS TEMPORARILY REMOVED FOR THE PURPOSE OF THE WORK SHALL BE REINSTALLED IN THEIR ORIGINAL LOCATIONS AND IN THEIR ORIGINAL CONDITION. IF A TEMPORARILY REMOVED ITEM IS DAMAGED DURING THE WORK, CONTRACTOR SHALL BE RESPONSIBLE TO REPLACE EACH DAMAGED ITEM WITH NEW TO MATCH EXISTING, AT NO ADDITIONAL COST TO THE OWNER.
6. CONTRACTOR IS RESPONSIBLE FOR SCHEDULING AND OVERSEEING DEMOLITION AND SALVAGE WORK THAT IS TO BE PERFORMED BY THE OWNER.
7. CONTRACTOR SHALL REVIEW THE SCOPE OF DEMOLITION TO ASCERTAIN THE EXISTENCE OF ANY HAZARDOUS MATERIALS REQUIRING SPECIAL ATTENTION. THE CONTRACTOR IS TO CONDUCT DUE DILIGENCE IN THE EVENT IT IS BELIEVED THERE ARE ADDITIONAL HAZARDOUS MATERIALS PRESENT IN THE WORK AREA.
8. ALL DEMOLITION WORK SHALL BE PERFORMED WITHOUT DISRUPTION TO ADJACENT OCCUPIED AREAS AND WITHOUT BEING OBTRUSIVE TO THE OWNER.
9. REFER TO AND COORDINATE WORK WITH MECHANICAL, PLUMBING AND ELECTRICAL DRAWINGS AND SPECIFICATIONS.
10. PROTECT EXISTING FIRE SPRINKLER ASSEMBLIES THAT ARE TO REMAIN DURING DEMOLITION. PROVIDE TEMPORARY SUPPORT OF PIPING AS REQUIRED. ALL MODIFICATIONS TO THE FIRE SPRINKLER SYSTEM SHALL CONFORM TO NFPA 13 AND THE INTERNATIONAL FIRE CODE, AS CURRENTLY ADOPTED AND AMENDED BY THE AUTHORITY HAVING JURISDICTION (AHJ).
11. IDENTIFY, DISCONNECT, REMOVE, AND CAP DESIGNATED UTILITIES WITHIN THE DEMOLITION AREAS AS REQUIRED TO ACCOMMODATE THE WORK. FIELD VERIFY EXISTING CONDUIT AND WIRING RUNS. NOTIFY THE OWNER PRIOR TO TURNING OFF ANY ELECTRICAL CIRCUITS. ALL ELECTRICAL SERVICES DISCONTINUED WITH THE DEMOLITION EFFORT SHALL BE PROPERLY "TAGGED OUT".
12. REMOVE ALL EXISTING FLOORING BASE (INCLUDING GLUE), CAULKING, AND OTHER MATERIALS ON SURFACES SCHEDULED TO BE REFINISHED OR EXPOSED IN THE NEW CONSTRUCTION. REMOVE ALL NAILS, SCREWS AND SIMILAR ANCHORING DEVICES FROM EXISTING SURFACES TO RECEIVE NEW MATERIALS OR FINISHES. PATCH WALLS, COLUMNS, AND OTHER SURFACES AS REQUIRED TO PROVIDE LEVEL AND SOUND SURFACES FOR THE INSTALLATION OF NEW FINISH MATERIALS.

KEYNOTES - DEMOLITION

900	REMOVE EXISTING FRAMED WALL
901	REMOVE EXISTING DOOR AND DOOR FRAME
902	REMOVE EXISTING WORKSTATION COUNTERTOPS, INCLUDING WALL BRACKETS AND OTHER ASSOCIATED ITEMS - SALVAGE TO OWNER FOR REUSE
903	REMOVE EXISTING WALL-MOUNTED COUNTERTOP
905	REMOVE EXISTING SMALL MODULAR BUILDING ADDITION IN ITS ENTIRETY, INCLUDING FOUNDATIONS AND SLABS/PAVEMENT BELOW
906	REMOVE EXISTING CONCRETE STAIRS, LANDING, AND METAL RAILING
907	SAWCUT AND REMOVE EXISTING CONCRETE SLAB
908	REMOVE EXISTING STAIRS
909	REMOVE EXISTING TOILET PARTITION AND DOOR - PATCH WALL AND WALL FINISH TO MATCH EXISTING
910	REMOVE EXISTING WEIGH SCALE IN ITS ENTIRETY, INCLUDING FOUNDATIONS, UTILITY CONNECTIONS, TRAFFIC SIGNAL POST, AND OTHER APPURTENANCES
911	REMOVE EXISTING CONCRETE STAIRS, METAL LANDING, AND METAL RAILINGS
912	REMOVE EXISTING WEIGHMASTER BOOTH BUILDING ADDITION IN ITS ENTIRETY, INCLUDING WALLS, DOORS, WINDOWS, FLOORS, STAIRS, SLABS, FOUNDATIONS, UTILITIES, AND OTHER APPURTENANCES BACK TO ORIGINAL ADMIN BUILDING EXTERIOR MASONRY WALL
913	SEE CIVIL DRAWINGS FOR REMOVAL OF EXISTING CONCRETE CURB
914	SAWCUT AND REMOVE EXISTING CONCRETE/ASPHALT FLATWORK
915	REMOVE EXISTING FLAGPOLE, INCLUDING ITS FOUNDATION, AND SALVAGE TO OWNER FOR REUSE
916	REMOVE EXISTING SUSPENDED ACOUSTICAL TILE CEILING AND LIGHT FIXTURES - SALVAGE VIDEO CAMERAS TO OWNER FOR REUSE
917	REMOVE EXISTING CEILING, LIGHT FIXTURES, AND OTHER CEILING-MOUNTED ITEMS IN THEIR ENTIRETY
918	REMOVE EXISTING ROOF AND FRAMING BETWEEN ORIGINAL ADMIN BUILDING AND SMALL MODULAR BUILDING ADDITION
919	REMOVE EXISTING WEIGHMASTER BOOTH ROOF AND FRAMING BACK TO ORIGINAL ADMIN BUILDING ROOF - PATCH EXISTING ADMIN ROOF STRUCTURE AND ROOFING SYSTEM (TO MATCH EXISTING) AS NECESSARY
920	REMOVE EXISTING URINAL SCREEN - PATCH WALL AND WALL FINISH TO MATCH EXISTING

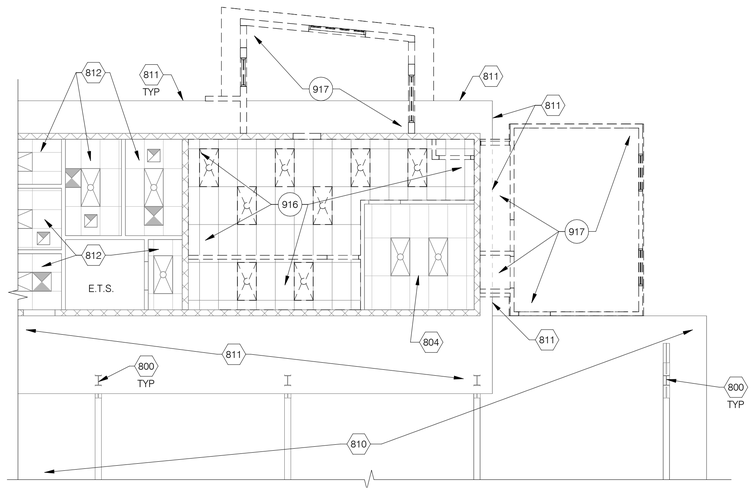

2 DEMOLITION RCP - ADMIN BUILDING
1/8" = 1'-0"

PLAN NORTH / NORTH

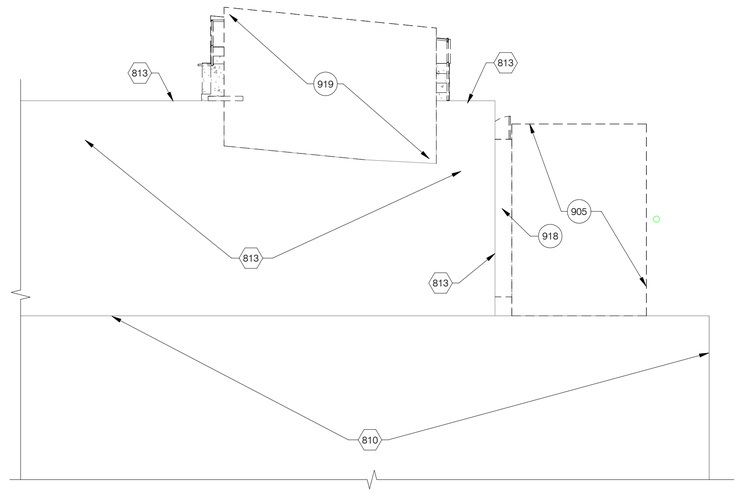

3 DEMOLITION ROOF PLAN - ADMIN BUILDING
1/8" = 1'-0"

PLAN NORTH / NORTH

18924
Z. JAN E.
LORANT
Date Signed 09/2026
ARIZONA U.S.A.
EXPIRES 6/30/2027

Issue Date:	10 JULY 2026	
Revisions:	# Description	Date

gabor lorant architects
3326 n. 3rd avenue suite 200
phoenix, arizona 85013
tel: 602.667.9090
fax: 602.667.9133
gaborlorant.com
gla Project No.: 24102

ARIZONA DEPARTMENT OF TRANSPORTATION
PROJECT DELIVERY AND OPERATIONS DIVISION
PROJECT MANAGEMENT GROUP

SAN SIMON PORT OF ENTRY
DEMOLITION PLANS - ADMIN BUILDING

ROUTE	I-10
MILEPOST	383
STRUCTURE NO.	

F.H.W.A. Arizona Division

STATE	PROJECT NO.	FEDERAL ID NO.	SHEET NO.	TOTAL SHEETS	RECORD DRAWING
ARIZ.	010 CH 383	010-F(238)T	76	200	

LOCATION: SAN SIMON PORT OF ENTRY (POE)

TRACS NO. F0728 01C

DWG NO. **A030**

___ OF ___

9/22/2026 3:02:59 PM

DO NOT SCALE DRAWINGS. DO NOT PLOT 'SCALE TO FIT'. THIS DOCUMENT IS FORMATTED FOR THE ANSI D (22"x34") SHEET SIZE.
FULL-SIZE PLOT ON ANSI D (22"x34") PAPER ONLY. HALF-SIZE PLOT ON 11"x17" PAPER ONLY.

STAPLE ZONE

GENERAL NOTES

1. CONTRACTOR IS RESPONSIBLE FOR ALL BARRICADES AND SAFETY CONCERNS WITHIN AND ADJACENT TO CONSTRUCTION.
2. VERIFY ALL EXISTING DIMENSIONS IN FIELD.
3. THIS SITE PLAN IS FOR REFERENCE ONLY TO SHOW THE RELATIONSHIP BETWEEN THE BUILDINGS AND THE PEDESTRIAN SITE CIRCULATION. SEE THE BUILDING PLANS FOR SITE WORK IMMEDIATELY AROUND THE BUILDINGS AND SEE THE CIVIL DRAWINGS FOR THE FULL EXTENT OF SITE WORK.

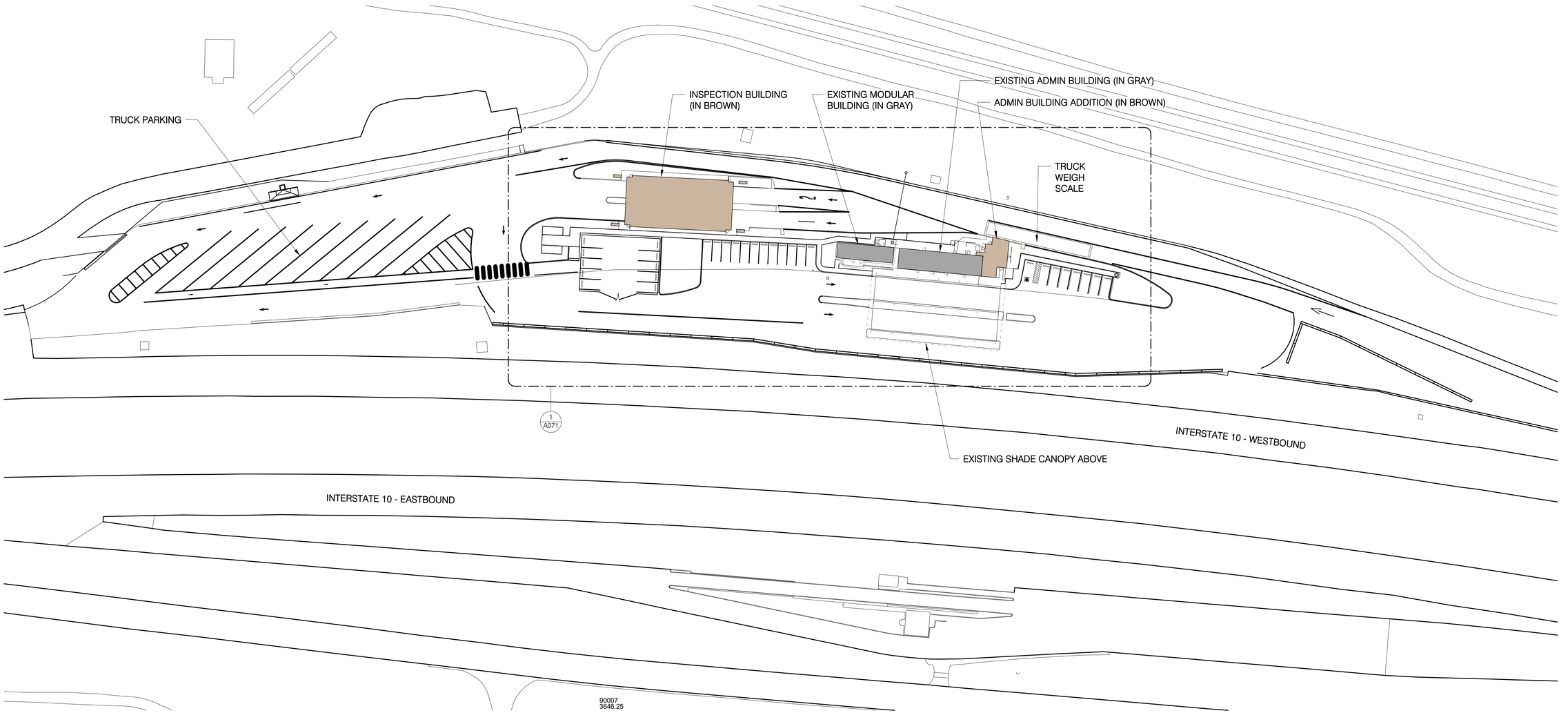

1 OVERALL ARCHITECTURAL SITE PLAN
1" = 50'-0"

REGISTERED ARCHITECT
18924
Z. JAN E. LORANT
Date Signed 08/14/26
ARIZONA U.S.A.
EXPIRES 6/30/2027

Issue Date:	14 AUGUST 2026		
Revisions:	#	Description	Date

gabor lorant architects
3326 n. 3rd avenue suite 200
phoenix, arizona 85013
tel: 602.667.9090
fax: 602.667.9133
gaborlorant.com

gla Project No.: 24102

gla

ARIZONA DEPARTMENT OF TRANSPORTATION
INFRASTRUCTURE DELIVERY AND OPERATIONS DIVISION
PROJECT MANAGEMENT GROUP

SAN SIMON PORT OF ENTRY
OVERALL ARCHITECTURAL SITE PLAN

ROUTE I-10
MILEPOST 383
STRUCTURE NO.

F.H.W.A. Arizona Division	STATE	PROJECT NO.	FEDERAL ID NO.	SHEET NO.	TOTAL SHEETS	RECORD DRAWING
	ARIZ.	010 CH 383	010-F(238)T	77	200	

LOCATION SAN SIMON PORT OF ENTRY (POE)

TRACS NO. F0728 01C

DWG NO. **A070**

___ OF ___

9/21/2026 4:29:11 PM

DO NOT SCALE DRAWINGS. DO NOT PLOT 'SCALE TO FIT'. THIS DOCUMENT IS FORMATTED FOR THE ANSI D (22"x34") SHEET SIZE.
FULL-SIZE PLOT ON ANSI D (22"x34") PAPER ONLY. HALF-SIZE PLOT ON 11"x17" PAPER ONLY.

STAPLE TO FIT WITHIN THE 100 YEAR FLOOD PLAIN ZONE

GENERAL NOTES

1. CONTRACTOR IS RESPONSIBLE FOR ALL BARRICADES AND SAFETY CONCERNS WITHIN AND ADJACENT TO CONSTRUCTION.
2. VERIFY ALL EXISTING DIMENSIONS IN FIELD.
3. THIS SITE PLAN IS FOR REFERENCE ONLY TO SHOW THE RELATIONSHIP BETWEEN THE BUILDINGS AND THE PEDESTRIAN SITE CIRCULATION. SEE THE BUILDING PLANS FOR SITE WORK IMMEDIATELY AROUND THE BUILDINGS AND SEE THE CIVIL DRAWINGS FOR THE FULL EXTENT OF SITE WORK.

SIDEWALK LEGEND

- EXISTING ACCESSIBLE CONCRETE SIDEWALK
- NEW ACCESSIBLE CONCRETE SIDEWALK

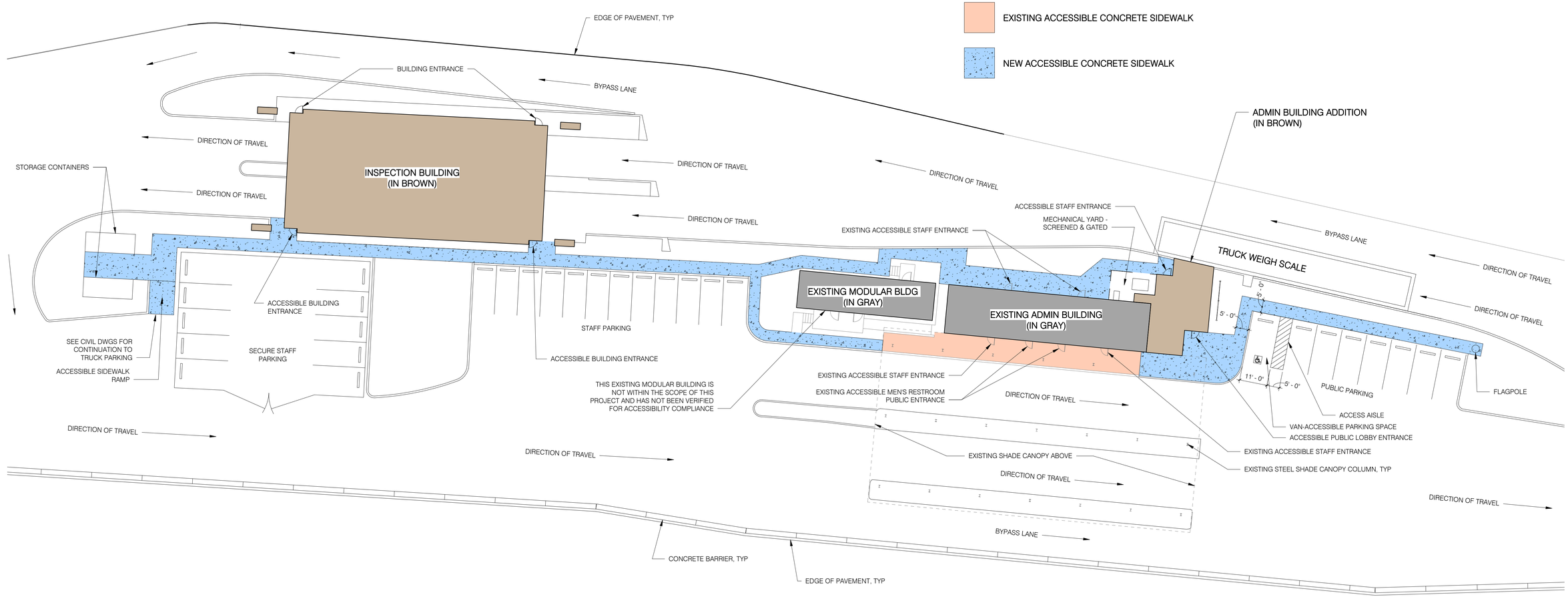

1 ENLARGED ARCHITECTURAL SITE PLAN
1" = 20'-0"

NORTH

NOTE: SOME ROOF OVERHANGS NOT SHOWN FOR SITE CIRCULATION CLARITY.

REGISTERED ARCHITECT
18924
Z. JAN E. LORANT
Date Signed 08/14/26
ARIZONA, U.S.A.
EXPIRES 6/30/2027

Issue Date:	14 AUGUST 2026	
Revisions:	# Description	Date

gabor lorant architects
3326 n. 3rd avenue suite 200
phoenix, arizona 85013
tel: 602.667.9090
fax: 602.667.9133
gaborlorant.com
gla Project No.: 24102

ARIZONA DEPARTMENT OF TRANSPORTATION
INFRASTRUCTURE DELIVERY AND OPERATIONS DIVISION
PROJECT MANAGEMENT GROUP

SAN SIMON PORT OF ENTRY
ENLARGED ARCHITECTURAL SITE PLAN

ROUTE I-10
MILEPOST 383
STRUCTURE NO.

F.H.W.A. Arizona Division	STATE	PROJECT NO.	FEDERAL ID NO.	SHEET NO.	TOTAL SHEETS	RECORD DRAWING
	ARIZ.	010 CH 383	010-F(238)T	78	200	

LOCATION: SAN SIMON PORT OF ENTRY (POE)

TRACS NO. F0728 01C

DWG NO. **A071**
___ OF ___

9/21/2026 4:29:11 PM

DO NOT SCALE DRAWINGS. DO NOT PLOT 'SCALE TO FIT'. THIS DOCUMENT IS FORMATTED FOR THE ANSI D (22"x34") SHEET SIZE.
FULL-SIZE PLOT ON ANSI D (22"x34") PAPER ONLY. HALF-SIZE PLOT ON 11"x17" PAPER ONLY.

STAPLE ZONE

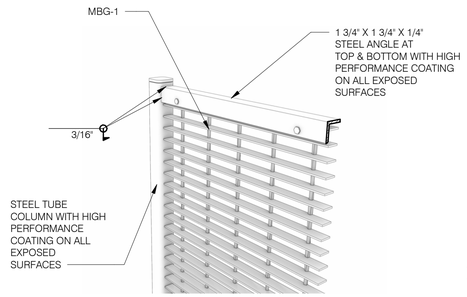

3 METAL SCREEN WALL - TOP (3D)
Not To Scale

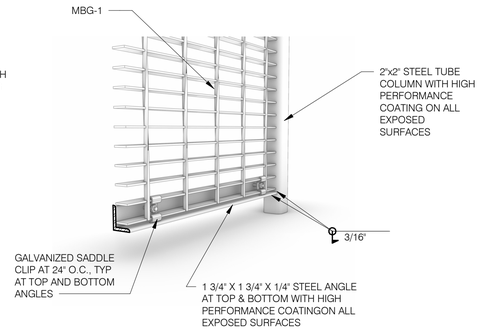

2 METAL SCREEN WALL - BACK SIDE (3D)
Not To Scale

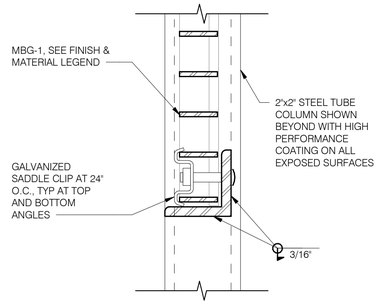

1 METAL SCREEN WALL - SECTION THRU BASE
6" = 1'-0"

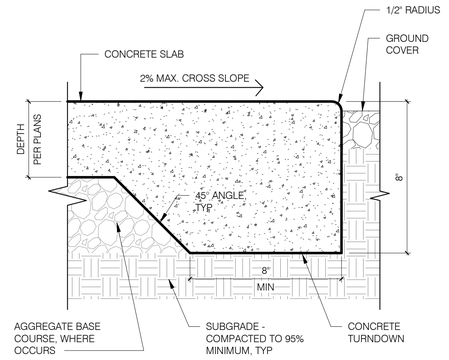

7 CONCRETE SLAB TURNDOWN
3" = 1'-0"

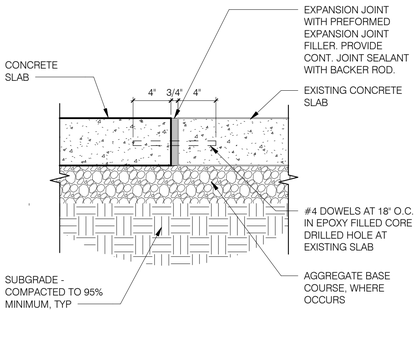

6 DOWEL CONCRETE SLAB TO EXISTING CONCRETE SLAB
1 1/2" = 1'-0"

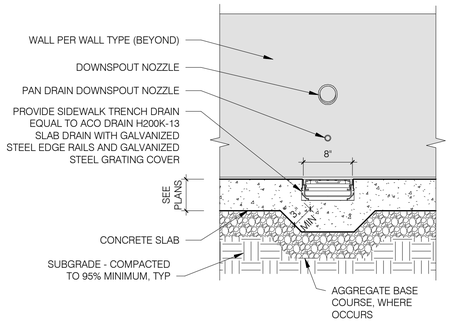

9 SIDEWALK TRENCH DRAIN CROSS SECTION
1" = 1'-0"

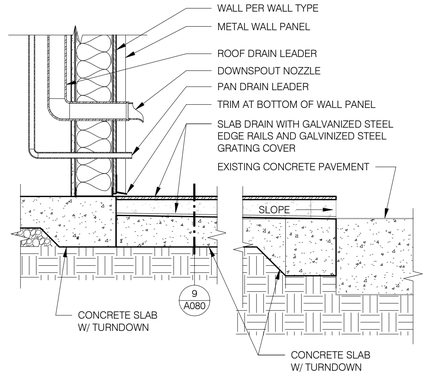

11 SIDEWALK TRENCH DRAIN LONGITUDINAL SECTION
1" = 1'-0"

REGISTERED ARCHITECT
18924
Z. JAN E. LORANT
Date Signed 09/20/26
ARIZONA U.S.A.
EXPIRES 6/30/2027

Issue Date:	10 JULY 2026		
Revisions:	#	Description	Date

gabor lorant architects
3326 n. 3rd avenue suite 200
phoenix, arizona 85013
tel: 602.667.9090
fax: 602.667.9133
gaborlorant.com
gla Project No.: 24102
gla

ARIZONA DEPARTMENT OF TRANSPORTATION
PROJECT DELIVERY AND OPERATIONS DIVISION
PROJECT MANAGEMENT GROUP

SAN SIMON PORT OF ENTRY
SITE DETAILS

ROUTE I-10
MILEPOST 383
STRUCTURE NO.

F.H.W.A. Arizona Division

STATE	PROJECT NO.	FEDERAL ID NO.	SHEET NO.	TOTAL SHEETS	RECORD DRAWING
ARIZ.	010 CH 383	010-F(238)T	79	200	

LOCATION: SAN SIMON PORT OF ENTRY (POE)

DWG NO. **A080**

TRACS NO. F0728 01C

___ OF ___

9/22/2026 3:03:00 PM

DO NOT SCALE DRAWINGS. DO NOT PLOT 'SCALE TO FIT'. THIS DOCUMENT IS FORMATTED FOR THE ANSI D (22"x34") SHEET SIZE.
FULL-SIZE PLOT ON ANSI D (22"x34") PAPER ONLY. HALF-SIZE PLOT ON 11"x17" PAPER ONLY.

STAPLE ZONE

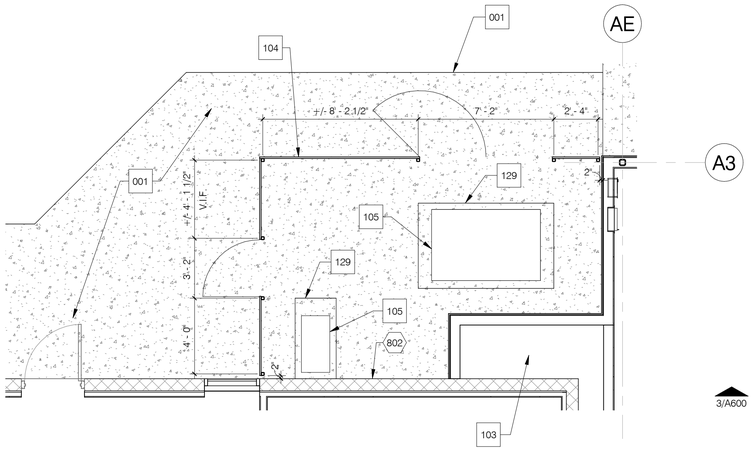

2 ENLARGED MECHANICAL YARD PLAN - ADMIN BUILDING
1/4" = 1'-0"

KEYNOTES - NEW WORK

001	5" THICK CONCRETE SLAB WITH #3 REBAR AT 18" O.C. EACH WAY - STANDARD GRAY COLOR AND LIGHT BROOM FINISH. INSTALL SLAB OVER 4" ABC FILL AND 95% MINIMUM COMPACTED FILL. PROVIDE TURN-DOWN AT EDGES WHERE THERE IS NO CURB.
003	SEE CIVIL DRAWINGS FOR SCOPE OF WORK IN THIS AREA
004	CIRCULAR CONTRACTION JOINT
007	5" THICK CONCRETE SLAB WITH #3 REBAR AT 18" O.C. EACH WAY - STANDARD GRAY COLOR AND LIGHT BROOM FINISH. INSTALL SLAB OVER 4" ABC FILL AND 95% MINIMUM COMPACTED FILL. SEE CIVIL DRAWINGS FOR ADJACENT CONCRETE CURB(S).
008	30' TALL FLAGPOLE AND CONCRETE FOUNDATION - SEE CIVIL DRAWINGS FOR LOCATION
009	SEE CIVIL DRAWINGS FOR CONTINUATION OF CONCRETE SLAB(S)
019	SIDEWALK TRENCH DRAIN
100	STEEL COLUMN - WITH PAINTED FINISH IN COLOR AS SELECTED BY ARCHITECT WHERE EXPOSED TO VIEW
103	MECHANICAL CHASE
104	METAL EQUIPMENT SCREEN ENCLOSURE
105	MECHANICAL UNIT/EQUIPMENT
107	CAST-IN-PLACE ARCHITECTURAL CONCRETE BARRIER WALL
108	SOLID SURFACE MATERIAL COUNTERTOP

KEYNOTES - NEW WORK

117	PROVIDE PAINTED FINISH ON EXISTING EXTERIOR WALL AND ALL WALL-MOUNTED ITEMS, EXCEPT FOR SECURITY CCTV CAMERAS, SIGNAGE, CARD READERS, AND OTHER ITEMS WITH FACTORY FINISHES. FOR STEEL ITEMS SUCH AS DOORS, DOOR AND WINDOW FRAMES, AND STRUCTURAL STEEL, PROVIDE HIGH PERFORMANCE COATING. COLORS FOR PAINT AND HIGH PERFORMANCE COATING AS SELECTED BY ARCHITECT.
128	NO EQUIPMENT, PANELS, DEVICES, FINISHES, OR OTHER ITEMS OTHER THAN WHAT IS ALREADY SHOWN ON THE DRAWINGS MAY BE INSTALLED, ALTERED, OR ADDED WITHIN AN I.T. ROOM WITHOUT PRIOR APPROVAL FROM THE ARCHITECT & OWNER.
129	CONCRETE HOUSEKEEPING PAD
131	WALL-MOUNTED KNOX BOX FOR FIRE/POLICE ACCESS
S01	SEMI-RECESSED FIRE EXTINGUISHER CABINET

GENERAL NOTES

1. FOR FRAMED WALLS, ALL DIMENSIONS ARE FROM CENTERLINE OF STUD TO CENTERLINE OF STRUCTURAL GRID, U.N.O. FOR MASONRY WALLS, ALL DIMENSIONS ARE FROM FACE OF MASONRY TO FACE OF MASONRY OR CENTERLINE OF STRUCTURAL GRID, U.N.O. VERIFY ALL EXISTING DIMENSIONS IN FIELD.
2. SEE SHEETS A180 & 181 FOR WALL TYPES AND A190 FOR WALL FRAMING DETAILS.
3. SEE DOOR SCHEDULE AND ELECTRICAL DOCUMENTS FOR ACCESS CONTROL LOCATIONS (I.E. CARD READERS).
4. SEE A600 SERIES SHEETS FOR ENLARGED FLOOR PLANS AND INTERIOR ELEVATIONS.

KEYNOTES - EXISTING

800	EXISTING STEEL COLUMN TO REMAIN
801	EXISTING CONCRETE SLAB TO REMAIN
802	EXISTING MASONRY WALL TO REMAIN
803	EXISTING WINDOW FRAME TO REMAIN
807	EXISTING FRAMED WALL TO REMAIN

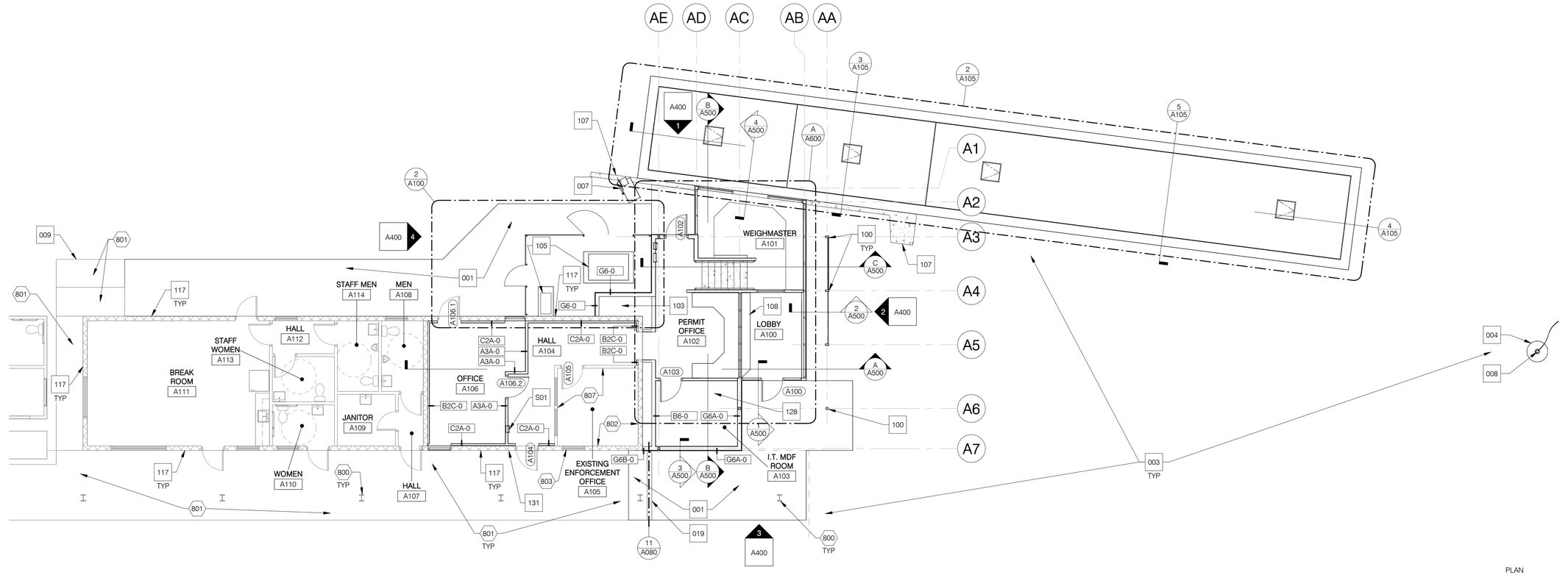

1 FLOOR PLAN - ANNOTATED - ADMIN BUILDING & WEIGH SCALE
1/8" = 1'-0"

PLAN NORTH NORTH

18924
Z. JAN E. LORANT
Date Signed 08/14/26
ARIZONA U.S.A.
EXPIRES 6/30/2027

Issue Date:	10 JULY 2026	
Revisions:	# Description	Date

gabor lorant architects
3326 n. 3rd avenue suite 200
phoenix, arizona 85013
tel: 602.667.9090
fax: 602.667.9133
gaborlorant.com
gla Project No.: 24102

ARIZONA DEPARTMENT OF TRANSPORTATION
PROJECT DELIVERY AND OPERATIONS DIVISION
PROJECT MANAGEMENT GROUP

SAN SIMON PORT OF ENTRY
FLOOR PLAN - ANNOTATED - ADMIN BUILDING & WEIGH SCALE

ROUTE I-10
MILEPOST 383
STRUCTURE NO.

F.H.W.A. Arizona Division	STATE	PROJECT NO.	FEDERAL ID NO.	SHEET NO.	TOTAL SHEETS	RECORD DRAWING
	ARIZ.	010 CH 383	010-F(238)T	80	200	

LOCATION: SAN SIMON PORT OF ENTRY (POE)
TRACS NO. F0728 01C
DWG NO. A100
___ OF ___

9/22/2026 3:03:00 PM

STAPLE ZONE

DO NOT SCALE DRAWINGS. DO NOT PLOT 'SCALE TO FIT'. THIS DOCUMENT IS FORMATTED FOR THE ANSI D (22"x34") SHEET SIZE.
FULL-SIZE PLOT ON ANSI D (22"x34") PAPER ONLY. HALF-SIZE PLOT ON 11"x17" PAPER ONLY.

GENERAL NOTES

1. FOR FRAMED WALLS, ALL DIMENSIONS ARE FROM CENTERLINE OF STUD TO CENTERLINE OF STRUCTURAL GRID, U.N.O. FOR MASONRY WALLS, ALL DIMENSIONS ARE FROM FACE OF MASONRY TO FACE OF MASONRY OR CENTERLINE OF STRUCTURAL GRID, U.N.O. VERIFY ALL EXISTING DIMENSIONS IN FIELD.
2. SEE SHEETS A180 & A181 FOR WALL TYPES AND A190 FOR WALL FRAMING DETAILS.
3. SEE A600 SERIES SHEETS FOR ENLARGED FLOOR PLANS AND INTERIOR ELEVATIONS.

KEYNOTES - EXISTING

800	EXISTING STEEL COLUMN TO REMAIN

KEYNOTES - NEW WORK

101	ALIGN FACE OF WALL WITH FACE OF OPENING

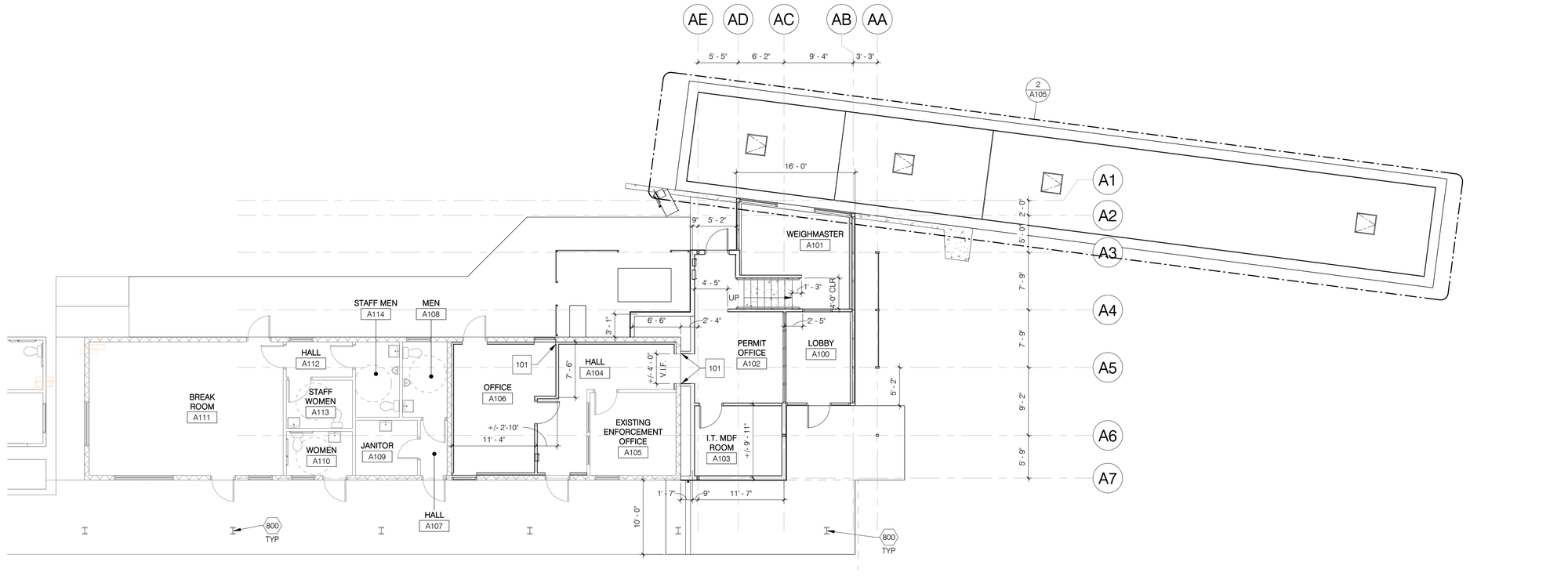

1 FLOOR PLAN - DIMENSIONED - ADMIN BUILDING & WEIGH SCALE
1/8" = 1'-0"

PLAN NORTH NORTH

18924
Z. JAN E.
LORANT
Date Signed 07/10/26
ARIZONA U.S.A.
EXPIRES 6/30/2027

Issue Date:	10 JULY 2026	
Revisions:	# Description	Date

gabor lorant architects
3326 n. 3rd avenue suite 200
phoenix, arizona 85013
tel: 602.667.9090
fax: 602.667.9133
gaborlorant.com
gla Project No.: 24102

ARIZONA DEPARTMENT OF TRANSPORTATION
PROJECT DELIVERY AND OPERATIONS DIVISION
PROJECT MANAGEMENT GROUP

SAN SIMON PORT OF ENTRY
FLOOR PLAN - DIMENSIONED - ADMIN BUILDING & WEIGH SCALE

ROUTE	MILEPOST	STRUCTURE NO.
I-10	383	

F.H.W.A. Arizona Division	STATE	PROJECT NO.	FEDERAL ID NO.	SHEET NO.	TOTAL SHEETS	RECORD DRAWING
	ARIZ.	010 CH 383	010-F(238)T	81	200	

LOCATION: SAN SIMON PORT OF ENTRY (POE)

TRACS NO. F0728 01C

DWG NO. **A101**

___ OF ___

9/22/2026 3:03:01 PM

DO NOT SCALE DRAWINGS. DO NOT PLOT 'SCALE TO FIT'. THIS DOCUMENT IS FORMATTED FOR THE ANSI D (22"x34") SHEET SIZE.
FULL-SIZE PLOT ON ANSI D (22"x34") PAPER ONLY. HALF-SIZE PLOT ON 11"x17" PAPER ONLY.

STAPLE ZONE

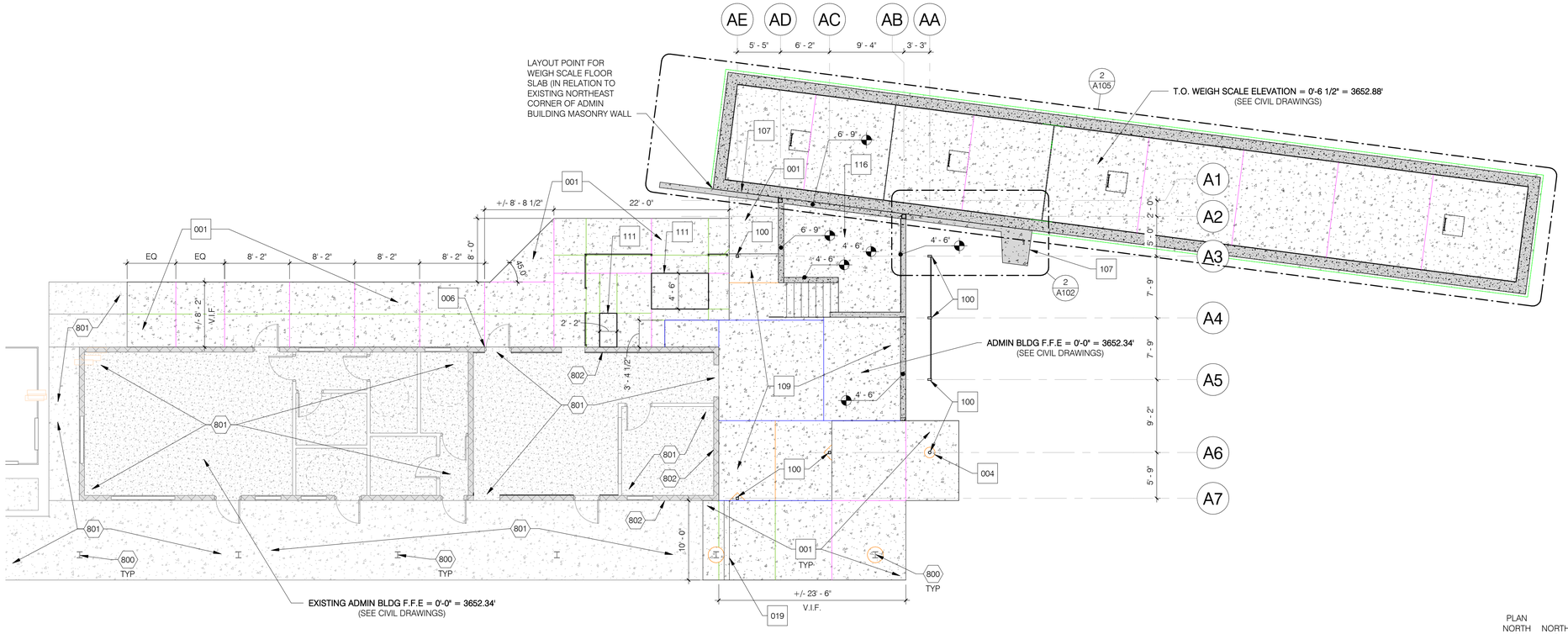

1 SLAB PLAN - ADMIN BUILDING & WEIGH SCALE
1/8" = 1'-0"

NOTE: SEE STRUCTURAL DRAWINGS.

PLAN NORTH NORTH

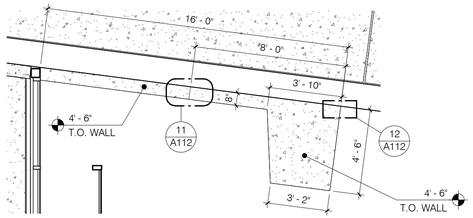

2 ENLARGED PLAN - CONCRETE BARRIER WALL AT WEIGHMASTER BOOTH
1/4" = 1'-0"

PLAN NORTH NORTH

GENERAL NOTES

1. DIMENSIONS ARE FROM CENTERLINE OF STRUCTURAL GRID, EDGE OF CONCRETE SLAB, OR FACE OF CONCRETE WALL, U.N.O. VERIFY ALL EXISTING DIMENSIONS IN FIELD.
2. SUBMIT JOINT PLAN FOR REVIEW BY ARCHITECT PRIOR TO FORMING, POURING, AND INSTALLING SLABS.

SLAB JOINT LEGEND

- EXPANSION JOINT - INTERIOR
- CONTRACTION JOINT - INTERIOR
- EXPANSION JOINT - EXTERIOR
- CONTRACTION JOINT - EXTERIOR

* NOTE: SEE SLAB JOINT DETAILS.

KEYNOTES - EXISTING

800	EXISTING STEEL COLUMN TO REMAIN
801	EXISTING CONCRETE SLAB TO REMAIN
802	EXISTING MASONRY WALL TO REMAIN

KEYNOTES - NEW WORK

001	5" THICK CONCRETE SLAB WITH #3 REBAR AT 18" O.C. EACH WAY - STANDARD GRAY COLOR AND LIGHT BROOM FINISH. INSTALL SLAB OVER 4" ABC FILL AND 95% MINIMUM COMPACTED FILL. PROVIDE TURN-DOWN AT EDGES WHERE THERE IS NO CURB.
004	CIRCULAR CONTRACTION JOINT
006	ALIGN SLAB JOINT WITH EDGE OF WALL OPENING
019	SIDEWALK TRENCH DRAIN
100	STEEL COLUMN - WITH PAINTED FINISH IN COLOR AS SELECTED BY ARCHITECT WHERE EXPOSED TO VIEW
107	CAST-IN-PLACE ARCHITECTURAL CONCRETE BARRIER WALL
109	REINFORCED CONCRETE SLAB
111	CONCRETE EQUIPMENT SLAB - CONFIRM SLAB IS A MINIMUM OF 4" BEYOND THE SIZE OF THE EQUIPMENT TO SIT ON TOP OF IT
116	ELEVATED REINFORCED CONCRETE SLAB

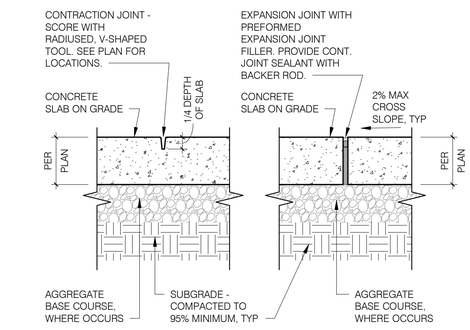

B EXTERIOR CONC. SLAB CONTRACTION & EXPANSION JOINTS
1 1/2" = 1'-0"

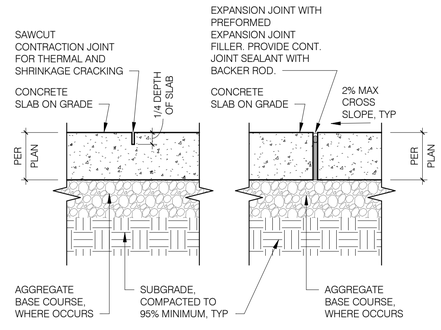

A INTERIOR CONC. SLAB CONTRACTION & EXPANSION JOINTS
1 1/2" = 1'-0"

18924
Z. JAN E. LORANT
Date Signed 08/14/26
ARIZONA U.S.A.
EXPIRES 6/30/2027

gabor lorant architects
3326 n. 3rd avenue suite 200
phoenix, arizona 85013
tel: 602.667.9090
fax: 602.667.9133
gaborlorant.com
gla Project No.: 24102

Issue Date:	10 JULY 2026	
Revisions:	# Description	Date

ARIZONA DEPARTMENT OF TRANSPORTATION
PROJECT DELIVERY AND OPERATIONS DIVISION
PROJECT MANAGEMENT GROUP

SAN SIMON PORT OF ENTRY
SLAB PLAN - ADMIN BUILDING & WEIGH SCALE,
WEIGH SCALE PIT PLAN & SECTIONS

ROUTE I-10
MILEPOST 383
STRUCTURE NO.

F.H.W.A. Arizona Division

STATE	PROJECT NO.	FEDERAL ID NO.	SHEET NO.	TOTAL SHEETS	RECORD DRAWING
ARIZ.	010 CH 383	010-F(238)T	82	200	

LOCATION: SAN SIMON PORT OF ENTRY (POE)

TRACS NO. F0728 01C

DWG NO. **A102**

____ OF ____

9/22/2026 3:03:01 PM

DO NOT SCALE DRAWINGS. DO NOT PLOT 'SCALE TO FIT'. THIS DOCUMENT IS FORMATTED FOR THE ANSI D (22"x34") SHEET SIZE.
FULL-SIZE PLOT ON ANSI D (22"x34") PAPER ONLY. HALF-SIZE PLOT ON 11"x17" PAPER ONLY.

STAPLE ZONE

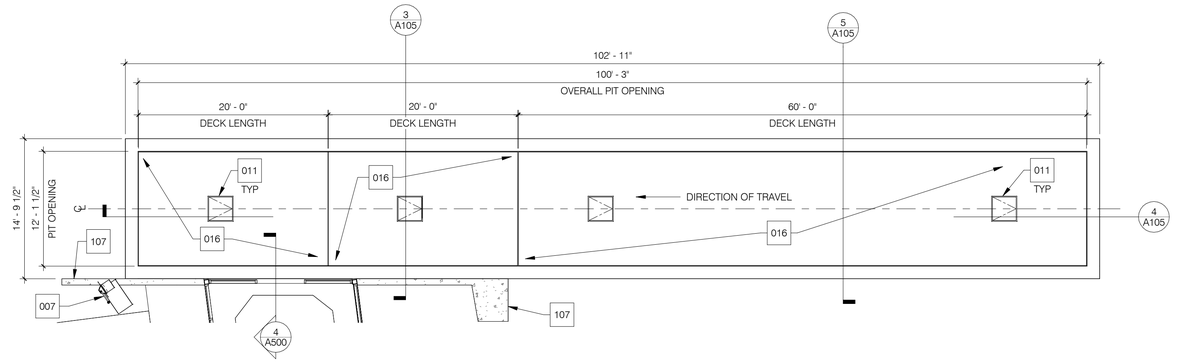

1 FLOOR PLAN - WEIGH SCALE - TOP PLATFORM
1/8" = 1'-0"

NOTE: PLAN ROTATED IN THIS VIEW FOR CLARITY. SEE STRUCTURAL DRAWINGS. COORDINATE ALL DIMENSIONS WITH WEIGH SCALE MANUFACTURER.

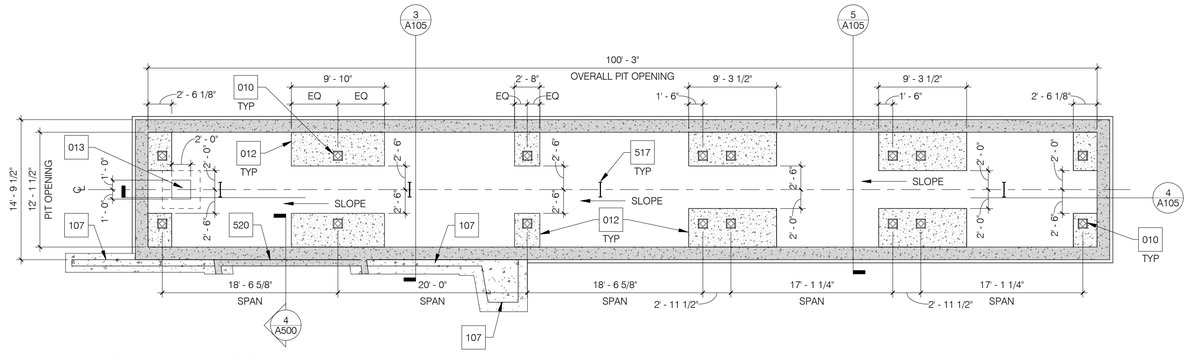

2 FLOOR PLAN - WEIGH SCALE - PIT LEVEL
1/8" = 1'-0"

NOTE: PLAN ROTATED IN THIS VIEW FOR CLARITY. SEE STRUCTURAL DRAWINGS. COORDINATE ALL DIMENSIONS WITH WEIGH SCALE MANUFACTURER.

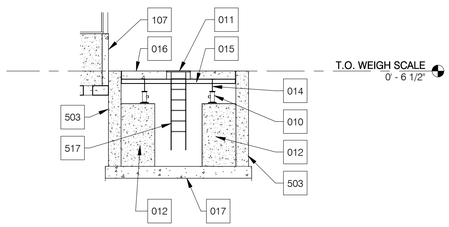

3 SECTION - WEIGH SCALE - LOOKING NORTHWEST
1/8" = 1'-0"

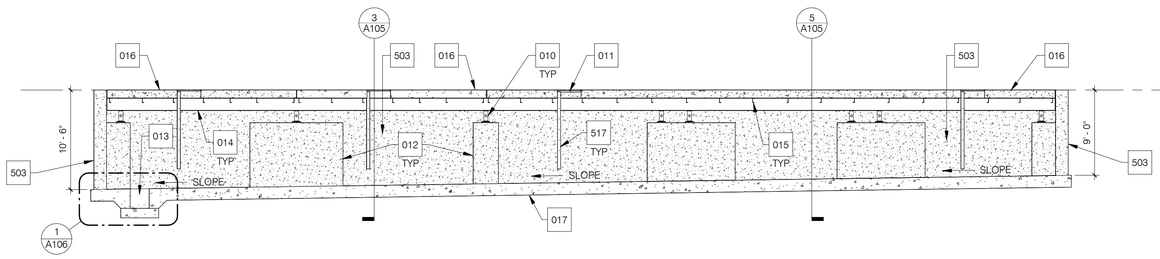

4 SECTION - WEIGH SCALE - LONG AXIS
1/8" = 1'-0"

NOTE: PLAN ROTATED IN THIS VIEW FOR CLARITY. SEE STRUCTURAL DRAWINGS. COORDINATE ALL DIMENSIONS WITH WEIGH SCALE MANUFACTURER.

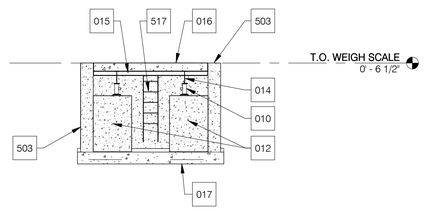

5 SECTION - WEIGH SCALE - LOOKING SOUTHEAST
1/8" = 1'-0"

GENERAL NOTES

1. DIMENSIONS ARE FROM CENTERLINE OF STRUCTURAL GRID, EDGE OF CONCRETE SLAB, OR FACE OF CONCRETE WALL, U.N.O. VERIFY ALL EXISTING DIMENSIONS IN FIELD.
2. SUBMIT JOINT PLAN FOR REVIEW BY ARCHITECT PRIOR TO FORMING, POURING, AND INSTALLING SLABS.

SLAB JOINT LEGEND

- EXPANSION JOINT - INTERIOR
- CONTRACTION JOINT - INTERIOR
- EXPANSION JOINT - EXTERIOR
- CONTRACTION JOINT - EXTERIOR

* NOTE: SEE SLAB JOINT DETAILS.

KEYNOTES - NEW WORK

007	5" THICK CONCRETE SLAB WITH #3 REBAR AT 18" O.C. EACH WAY - STANDARD GRAY COLOR AND LIGHT BROOM FINISH. INSTALL SLAB OVER 4" ABC FILL AND 95% MINIMUM COMPACTED FILL. SEE CIVIL DRAWINGS FOR ADJACENT CONCRETE CURB(S).
010	WEIGH SCALE LOAD CELL ASSEMBLY
011	ACCESS DOOR / MANHOLE WITH SUSPENDED PIT LADDER - BY WEIGH SCALE MANUFACTURER
012	WEIGH SCALE CONCRETE PILASTER
013	WEIGH SCALE SUMP PUMP PIT
014	WEIGH SCALE MAIN STEEL GIRDER
015	WEIGH SCALE STEEL CROSSMEMBER
016	WEIGH SCALE REINFORCED CONCRETE DECK
017	WEIGH SCALE FOUNDATION PIT SLAB
107	CAST-IN-PLACE ARCHITECTURAL CONCRETE BARRIER WALL
503	CAST-IN-PLACE CONCRETE WALL
517	SUSPENDED PIT LADDER - BY WEIGH SCALE MANUFACTURER
520	CAST-IN-PLACE CONCRETE STEM WALL

REGISTERED ARCHITECT
18924
Z. JAN E. LORANT
Date Signed 07/10/26
ARIZONA U.S.A.
EXPIRES 6/30/2027

Issue Date:	10 JULY 2026	
Revisions:	# Description	Date

gabor lorant architects
3326 n. 3rd avenue suite 200
phoenix, arizona 85013
tel: 602.667.9090
fax: 602.667.9133
gaborlorant.com
gla Project No.: 24102

ARIZONA DEPARTMENT OF TRANSPORTATION
PROJECT DELIVERY AND OPERATIONS DIVISION
PROJECT MANAGEMENT GROUP

SAN SIMON PORT OF ENTRY
WEIGH SCALE PIT PLAN, SECTIONS AND DETAILS

ROUTE I-10
MILEPOST 383
STRUCTURE NO.

F.H.W.A. Arizona Division

STATE	PROJECT NO.	FEDERAL ID NO.	SHEET NO.	TOTAL SHEETS	RECORD DRAWING
ARIZ.	010 CH 383	010-F(238)T	83	200	

LOCATION: SAN SIMON PORT OF ENTRY (POE)

TRACS NO. F0728 01C

DWG NO. **A105**
___ OF ___

9/22/2026 3:03:02 PM

DO NOT SCALE DRAWINGS. DO NOT PLOT 'SCALE TO FIT'. THIS DOCUMENT IS FORMATTED FOR THE ANSI D (22"x34") SHEET SIZE.
FULL-SIZE PLOT ON ANSI D (22"x34") PAPER ONLY. HALF-SIZE PLOT ON 11"x17" PAPER ONLY.

STAPLE ZONE

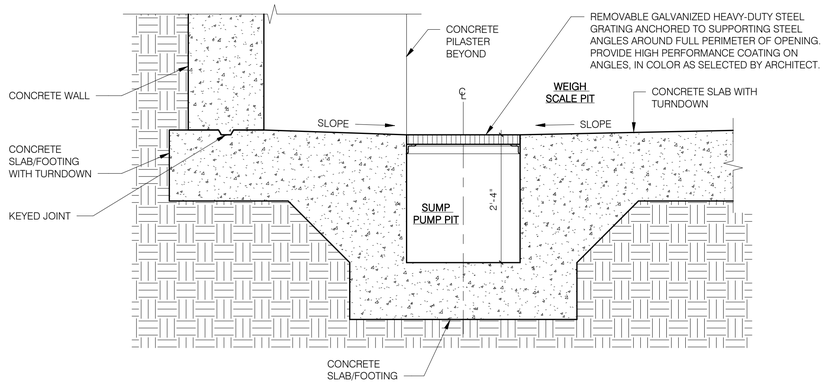

1 WEIGH SCALE SUMP PUMP PIT - SECTION
3/4" = 1'-0"

REGISTERED ARCHITECT
18924
Z. JAN E. LORANT
Date Signed 07/10/26
ARIZONA, U.S.A.
EXPIRES 6/30/2027

Issue Date:	10 JULY 2026	
Revisions:	# Description	Date

gabor lorant architects
3326 n. 3rd avenue suite 200
phoenix, arizona 85013
tel: 602.667.9090
fax: 602.667.9133
gaborlorant.com
gla Project No.: 24102

ARIZONA DEPARTMENT OF TRANSPORTATION
PROJECT DELIVERY AND OPERATIONS DIVISION
PROJECT MANAGEMENT GROUP

SAN SIMON PORT OF ENTRY
WEIGH SCALE PIT DETAILS

ROUTE I-10
MILEPOST 383
STRUCTURE NO.

F.H.W.A. Arizona Division	STATE	PROJECT NO.	FEDERAL ID NO.	SHEET NO.	TOTAL SHEETS	RECORD DRAWING
	ARIZ.	010 CH 383	010-F(238)T	84	200	

LOCATION SAN SIMON PORT OF ENTRY (POE)

TRACS NO. F0728 01C

DWG NO. **A106**

___ OF ___

9/22/2026 3:03:02 PM

DO NOT SCALE DRAWINGS. DO NOT PLOT 'SCALE TO FIT'. THIS DOCUMENT IS FORMATTED FOR THE ANSI D (22"x34") SHEET SIZE.
FULL-SIZE PLOT ON ANSI D (22"x34") PAPER ONLY. HALF-SIZE PLOT ON 11"x17" PAPER ONLY.

STAPLE ZONE

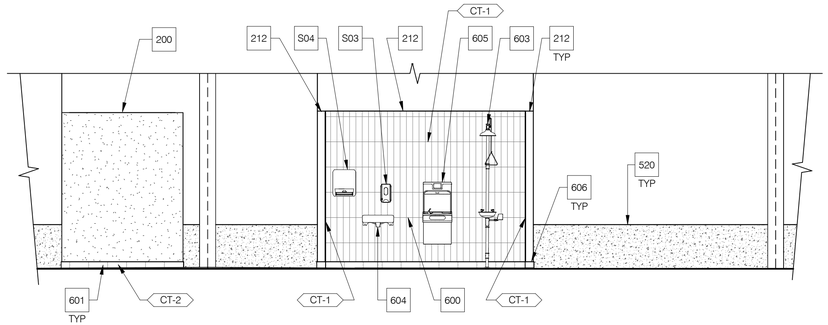

2 INTERIOR ELEVATION - INSPECTION BAY #2 - NORTH
1/4" = 1'-0"

GENERAL NOTES

1. FOR FRAMED WALLS, ALL DIMENSIONS ARE FROM CENTERLINE OF STUD TO CENTERLINE OF STRUCTURAL GRID, U.N.O. FOR MASONRY WALLS, ALL DIMENSIONS ARE FROM FACE OF MASONRY TO FACE OF MASONRY OR CENTERLINE OF STRUCTURAL GRID, U.N.O. VERIFY ALL EXISTING DIMENSIONS IN FIELD.
2. SEE SHEETS A180 & 181 FOR WALL TYPES AND A190 FOR WALL FRAMING DETAILS.
3. SEE DOOR SCHEDULE AND ELECTRICAL DOCUMENTS FOR ACCESS CONTROL LOCATIONS (I.E. CARD READERS).
4. SEE A600 SERIES SHEETS FOR ENLARGED FLOOR PLANS AND INTERIOR ELEVATIONS.

KEYNOTES - NEW WORK

~	
001	5" THICK CONCRETE SLAB WITH #3 REBAR AT 18" O.C. EACH WAY - STANDARD GRAY COLOR AND LIGHT BROOM FINISH. INSTALL SLAB OVER 4" ABC FILL AND 95% MINIMUM COMPACTED FILL. PROVIDE TURN-DOWN AT EDGES WHERE THERE IS NO CURB.
009	SEE CIVIL DRAWINGS FOR CONTINUATION OF CONCRETE SLAB(S)
102	CONCRETE CURB
107	CAST-IN-PLACE ARCHITECTURAL CONCRETE BARRIER WALL
110	STEEL ANGLE AT EDGE OF INSPECTION PIT FLOOR OPENING WITH TAPERED ENDS - PROVIDE HIGH PERFORMANCE COATING IN SAFETY YELLOW COLOR
112	HYDRAULIC ROLLING PIT COVER WITH STEEL GRATING - PROVIDE EACH COVER WITH ITS OWN COVER OPERATOR LOCATED WITHIN THE PIT

KEYNOTES - NEW WORK

114	CAST-IN-PLACE CONCRETE WALL - T.O. WALL 4'-6" ABOVE RIDGE OF FLOOR SLAB
115	WALL-MOUNTED CCTV CABINET/PANEL
119	REMOVABLE TRAFFIC-RATED STEEL PLATE FLUSH WITH ADJACENT CONCRETE PAVEMENT - PROVIDE HIGH PERFORMANCE COATING IN COLOR AS SELECTED BY ARCHITECT
123	WHITE PAVEMENT STRIPING - COORDINATE PRECISE LOCATION AND EXTENT WITH ARCHITECT ON SITE DURING CONSTRUCTION
132	RECESSED WALL-MOUNTED KNOX BOX FOR FIRE/POLICE ACCESS
200	PROVIDE FINISHED GYPSUM BOARD CEILING CAP WITH PAINTED FINISH ON BOTH SIDES OF THE TOP OF THIS ROOM
212	PROVIDE 1/2" FINISHED GYPSUM BOARD CAP WITH PAINTED FINISH ON TOP OF GYPSUM BOARD WALL
502	ALUMINUM SHIP LADDER
520	CAST-IN-PLACE CONCRETE STEM WALL
600	RECTANGULAR TILE ORIENTED VERTICALLY - LAYOUT TILE HORIZONTALLY ACROSS THE WALL WITH EQUAL CUT TILE AT EACH SIDE AND VERTICALLY ACROSS THE WALL WITH FULL TILE AT THE FLOOR AND CUT TILE AT THE CEILING
601	TILE BASE ON ALL SIDES OF THIS ROOM'S ENCLOSING GYPSUM BOARD WALLS
603	EMERGENCY EYE WASH AND SHOWER

KEYNOTES - NEW WORK

604	WALL-HUNG LAVATORY - INSTALLED JUST ABOVE CONCRETE STEM WALL
605	DRINKING FOUNTAIN WITH BOTTLE FILLER MOUNTED
606	TILE BASE ON ALL SIDES OF THE GYPSUM BOARD WALLS
S03	SURFACE-MOUNTED SOAP DISPENSER
S04	SURFACE-MOUNTED ELECTRIC PAPER TOWEL DISPENSER
S06	SEMI-RECESSED FIRE EXTINGUISHER CABINET. MOUNT CABINET WITH BOTTOM AT TOP OF CONCRETE STEM WALL.
S07	SEMI-RECESSED DEFIBRILLATOR (AED) CABINET. MOUNT CABINET WITH BOTTOM AT TOP OF CONCRETE STEM WALL.

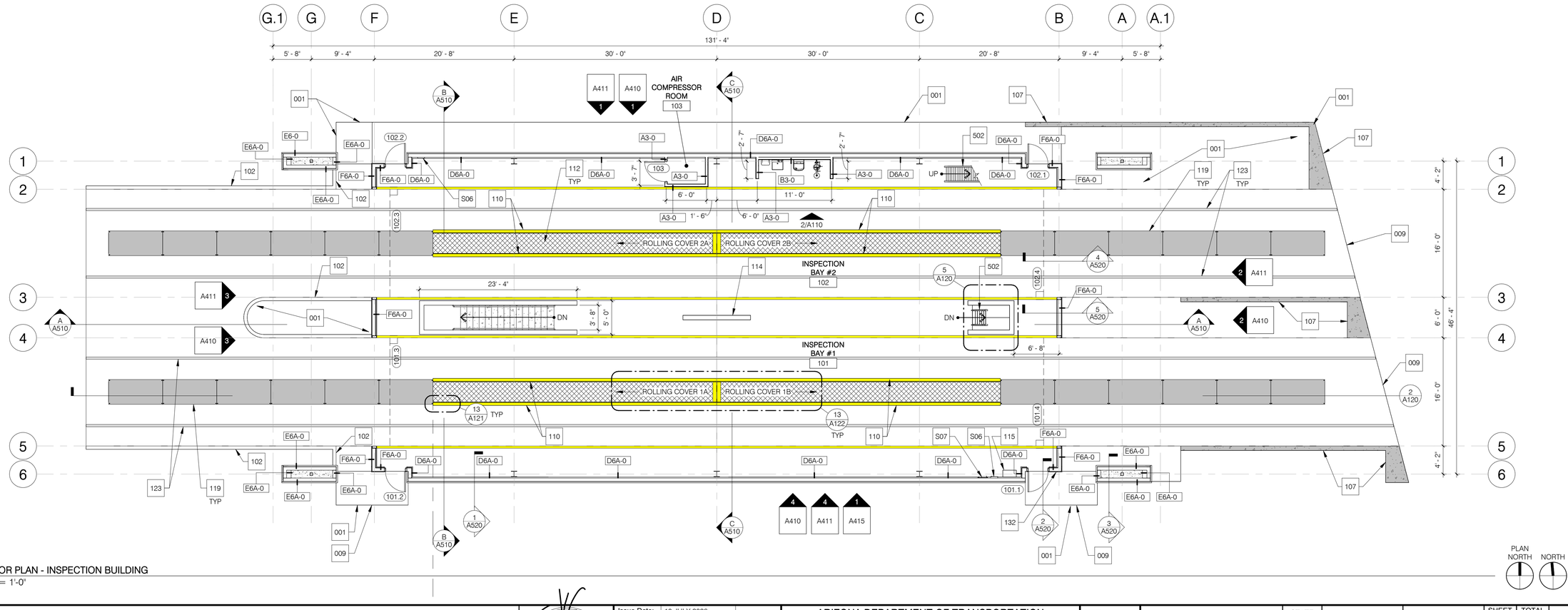

1 FLOOR PLAN - INSPECTION BUILDING
1/8" = 1'-0"

18924
Z. JAN E. LORANT
Date Signed 07/10/26
ARIZONA U.S.A.
EXPIRES 6/30/2027

Issue Date:	10 JULY 2026	
Revisions:	# Description	Date

gabor lorant architects
3326 n. 3rd avenue suite 200
phoenix, arizona 85013
tel: 602.667.9090
fax: 602.667.9133
gaborlorant.com
gla Project No.: 24102

ARIZONA DEPARTMENT OF TRANSPORTATION
PROJECT DELIVERY AND OPERATIONS DIVISION
PROJECT MANAGEMENT GROUP

SAN SIMON PORT OF ENTRY
FLOOR PLAN - INSPECTION BUILDING

ROUTE I-10
MILEPOST 383
STRUCTURE NO.

F.H.W.A. Arizona Division	STATE	PROJECT NO.	FEDERAL ID NO.	SHEET NO.	TOTAL SHEETS	RECORD DRAWING
	ARIZ.	010 CH 383	010-F(238)T	85	200	

LOCATION SAN SIMON PORT OF ENTRY (POE)

TRACS NO. F0728 01C

DWG NO. **A110**
___ OF ___

9/22/2026 3:03:03 PM

DO NOT SCALE DRAWINGS. DO NOT PLOT "SCALE TO FIT". THIS DOCUMENT IS FORMATTED FOR THE ANSI D (22"x34") SHEET SIZE. FULL-SIZE PLOT ON ANSI D (22"x34") PAPER ONLY. HALF-SIZE PLOT ON 11"x17" PAPER ONLY.

STAPLE ZONE

GENERAL NOTES

1. DIMENSIONS ARE FROM CENTERLINE OF STRUCTURAL GRID, EDGE OF CONCRETE SLAB, OR FACE OF CONCRETE WALL, U.N.O. VERIFY ALL EXISTING DIMENSIONS IN FIELD.
2. SUBMIT JOINT PLAN FOR REVIEW BY ARCHITECT PRIOR TO FORMING, POURING, AND INSTALLING SLABS.

SLAB JOINT LEGEND

- EXPANSION JOINT - INTERIOR
- CONTRACTION JOINT - INTERIOR
- EXPANSION JOINT - EXTERIOR
- CONTRACTION JOINT - EXTERIOR

* NOTE: SEE SLAB JOINT DETAILS.

KEYNOTES - NEW WORK

~	
001	5" THICK CONCRETE SLAB WITH #3 REBAR AT 18" O.C. EACH WAY - STANDARD GRAY COLOR AND LIGHT BROOM FINISH. INSTALL SLAB OVER 4" ABC FILL AND 95% MINIMUM COMPACTED FILL. PROVIDE TURN-DOWN AT EDGES WHERE THERE IS NO CURB.
009	SEE CIVIL DRAWINGS FOR CONTINUATION OF CONCRETE SLAB(S)
018	SEE CIVIL DRAWINGS FOR CONCRETE CURB
100	STEEL COLUMN - WITH PAINTED FINISH IN COLOR AS SELECTED BY ARCHITECT WHERE EXPOSED TO VIEW
102	CONCRETE CURB
114	CAST-IN-PLACE CONCRETE WALL - T.O. WALL 4'-6" ABOVE RIDGE OF FLOOR SLAB
118	CAST-IN-PLACE CONCRETE WALL - T.O. WALL 3'-6" A.F.F.
127	SLOPED CAST-IN-PLACE ARCHITECTURAL CONCRETE BARRIER WALL. T.O. WALL TO FOLLOW ADJACENT SLOPED SLAB WITH T.O. WALL AT 38" ABOVE SLAB AT EACH POINT ALONG ITS SLOPE.

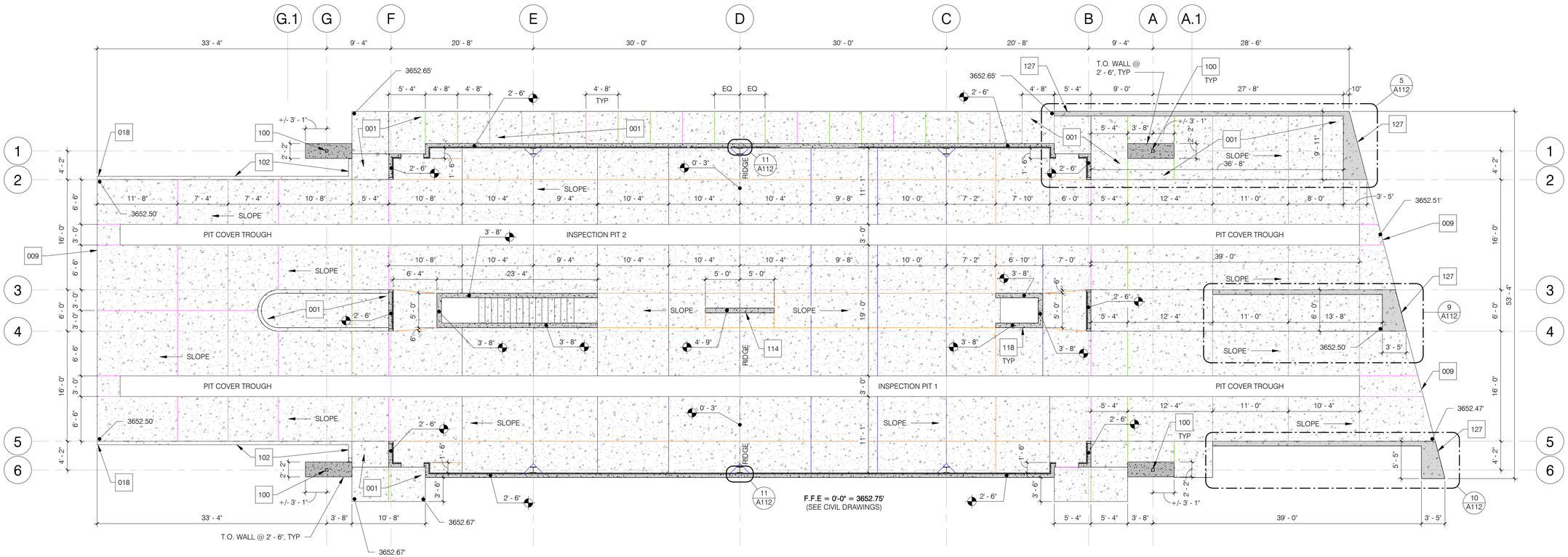

1 SLAB & CONCRETE WALL PLAN - INSPECTION BUILDING - MAIN LEVEL
1/8" = 1'-0"

PLAN NORTH NORTH

Issue Date:	10 JULY 2026		
Revisions:	#	Description	Date

REGISTERED ARCHITECT 18924 Z. JAN E. LORANT Date Signed 07/10/26 ARIZONA, U.S.A. EXPIRES 6/30/2027

gabor lorant architects
3326 n. 3rd avenue suite 200
phoenix, arizona 85013
tel: 602.667.9090
fax: 602.667.9133
gaborlorant.com

gla Project No.: 24102

gla

ARIZONA DEPARTMENT OF TRANSPORTATION
PROJECT DELIVERY AND OPERATIONS DIVISION
PROJECT MANAGEMENT GROUP

SAN SIMON PORT OF ENTRY
SLAB & CONCRETE WALL PLAN - INSPECTION BUILDING - FINISH FLOOR LEVEL

ROUTE	F.H.W.A. Arizona Division	STATE	PROJECT NO.	FEDERAL ID NO.	SHEET NO.	TOTAL SHEETS	RECORD DRAWING
I-10		ARIZ.	010 CH 383	010-F(238)T	86	200	
MILEPOST 383	LOCATION: SAN SIMON PORT OF ENTRY (POE)						DWG NO. A111
STRUCTURE NO.	TRACS NO. F0728 01C						___ OF ___

9/22/2026 3:03:03 PM

DO NOT SCALE DRAWINGS. DO NOT PLOT SCALE TO FIT: THIS DOCUMENT IS FORMATTED FOR THE ANSI D (22"x34") SHEET SIZE.
FULL-SIZE PLOT ON ANSI D (22"x34") PAPER ONLY. HALF-SIZE PLOT ON 11"x17" PAPER ONLY.

STAPLE ZONE

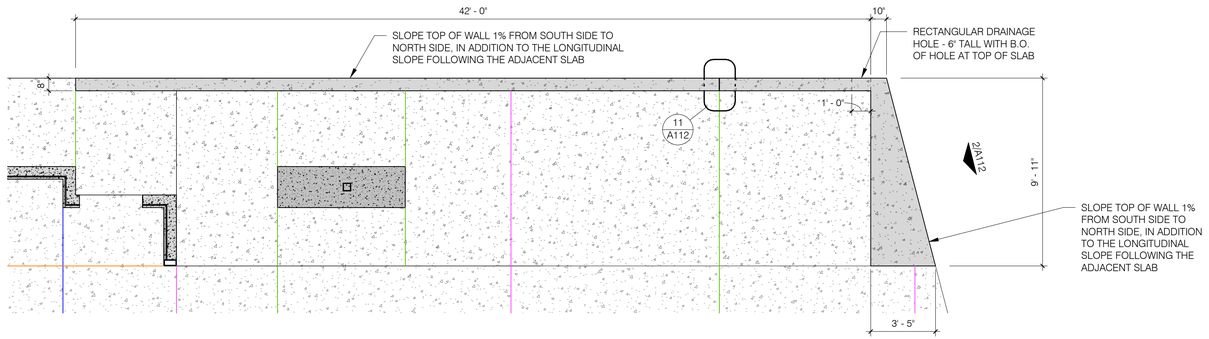

5 CONCRETE BARRIER WALL ENLARGED PLAN - BYPASS LANE
1/4" = 1'-0"

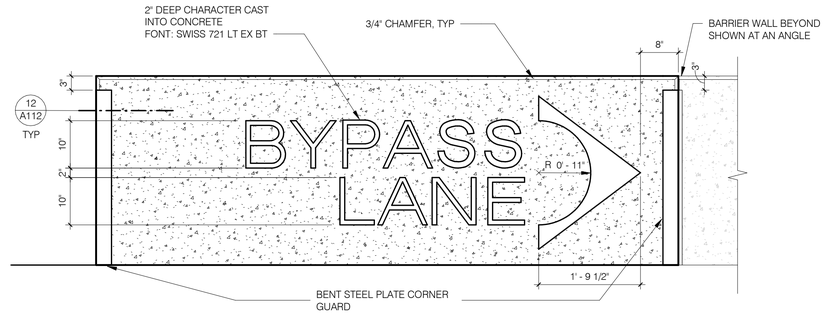

2 CONCRETE BARRIER WALL ELEVATION - BYPASS LANE
3/4" = 1'-0"

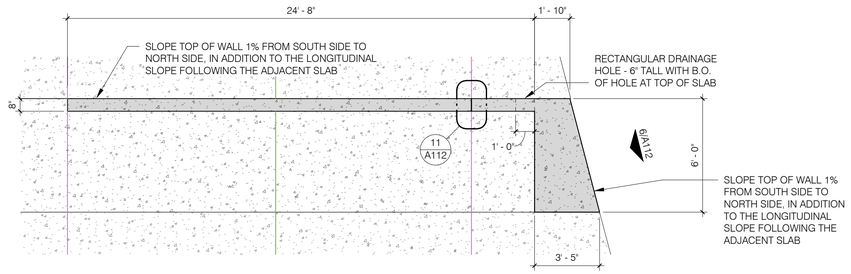

9 CONCRETE BARRIER WALL ENLARGED PLAN - BAY 2
1/4" = 1'-0"

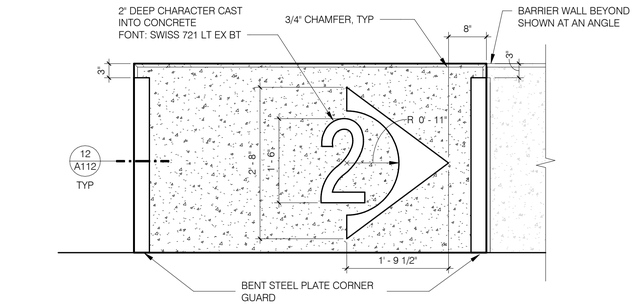

6 CONCRETE BARRIER WALL ELEVATION - BAY 2
3/4" = 1'-0"

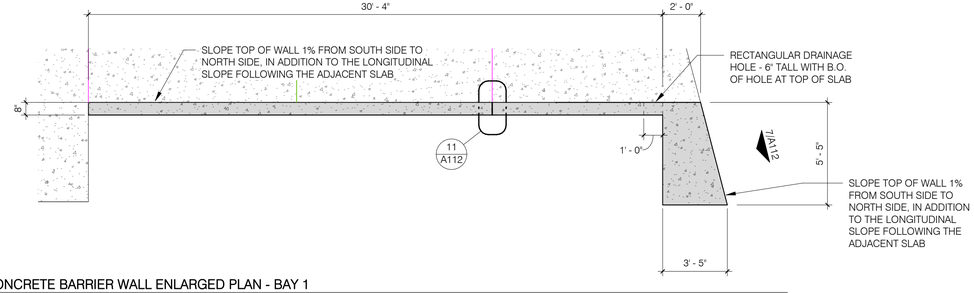

10 CONCRETE BARRIER WALL ENLARGED PLAN - BAY 1
1/4" = 1'-0"

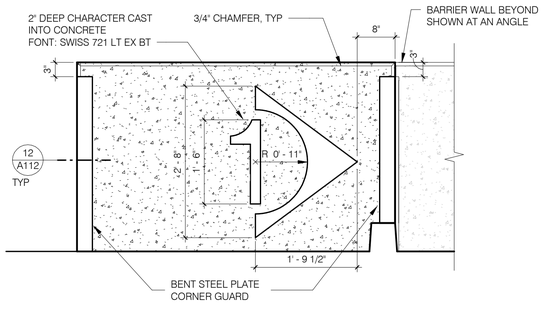

7 CONCRETE BARRIER WALL ELEVATION - BAY 1
3/4" = 1'-0"

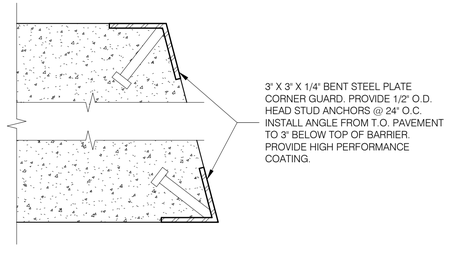

12 CONCRETE BARRIER WALL - BENT STEEL PLATE CORNER GUARD
3" = 1'-0"

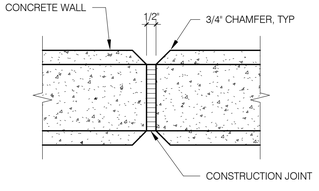

11 VERTICAL CONSTRUCTION JOINT AT CONCRETE WALL
3" = 1'-0"



Issue Date:	10 JULY 2026	
Revisions:	Δ Description	Date

gabor lorant architects
3326 n. 3rd avenue suite 200
phoenix, arizona 85013
tel: 602.667.9090
fax: 602.667.9133
gaborlorant.com
gla Project No.: 24102

ARIZONA DEPARTMENT OF TRANSPORTATION
PROJECT DELIVERY AND OPERATIONS DIVISION
PROJECT MANAGEMENT GROUP

SAN SIMON PORT OF ENTRY
CONCRETE WALL DETAILS

ROUTE I-10
MILEPOST 383
STRUCTURE NO.

F.H.W.A. Arizona Division

STATE	PROJECT NO.	FEDERAL ID NO.	SHEET NO.	TOTAL SHEETS	RECORD DRAWING
ARIZ.	010 CH 383	010-F(238)T	87	200	

LOCATION: SAN SIMON PORT OF ENTRY (POE)

TRACS NO. F0728 01C

DWG NO. **A112**
___ OF ___

9/22/2026 3:03:04 PM

DO NOT SCALE DRAWINGS. DO NOT PLOT SCALE TO FIT: THIS DOCUMENT IS FORMATTED FOR THE ANSI D (22"x34") SHEET SIZE.
FULL-SIZE PLOT ON ANSI D (22"x34") PAPER ONLY. HALF-SIZE PLOT ON 11"x17" PAPER ONLY.

STAPLE ZONE

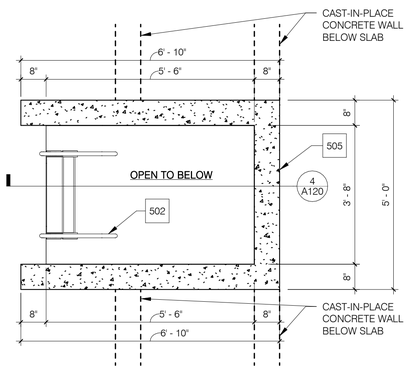

5 ENLARGED PLAN - EMERGENCY PIT LADDER
1/2" = 1'-0"

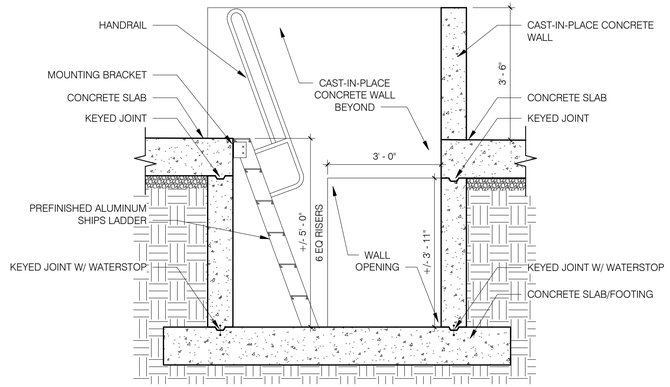

4 SECTION - EMERGENCY PIT LADDER
1/2" = 1'-0"

PLAN NORTH NORTH

~	KEYNOTES - NEW WORK
106	CONCRETE FOOTING ABOVE
107	CAST-IN-PLACE ARCHITECTURAL CONCRETE BARRIER WALL
113	HYDRAULIC ROLLING PIT COVER OPERATOR
120	CONCRETE SLAB/FOOTING
121	FLOOR DRAIN
122	INSPECTION BUILDING SUMP PUMP PIT
124	OPENING - WALL ABOVE
126	PROVIDE RES-1 FLOOR FINISH - CONFIRM PRECISE EXTENT OF THIS FINISH WITHIN THE INSPECTION PITS WITH THE ARCHITECT
130	TRENCH DRAIN
502	ALUMINUM SHIP LADDER
505	CAST-IN-PLACE REINFORCED CONCRETE BARRIER WALL
506	MECHANICAL EXHAUST GRILLE

GENERAL NOTES

1. FOR FRAMED WALLS, ALL DIMENSIONS ARE FROM CENTERLINE OF STUD TO CENTERLINE OF STRUCTURAL GRID, U.N.O. FOR MASONRY WALLS, ALL DIMENSIONS ARE FROM FACE OF MASONRY TO FACE OF MASONRY OR CENTERLINE OF STRUCTURAL GRID, U.N.O. VERIFY ALL EXISTING DIMENSIONS IN FIELD.
2. SEE SHEETS A180 & A181 FOR WALL TYPES AND A190 FOR WALL FRAMING DETAILS.
3. SEE A600 SERIES SHEETS FOR ENLARGED FLOOR PLANS AND INTERIOR ELEVATIONS.

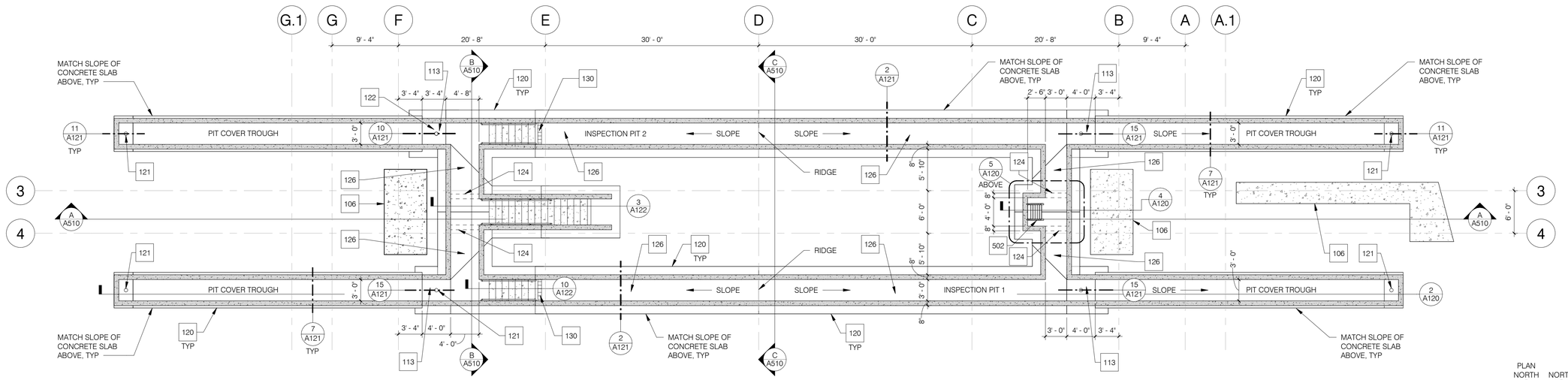

1 FLOOR & SLAB PLAN - INSPECTION BUILDING - PIT LEVEL
1/8" = 1'-0"

PLAN NORTH NORTH

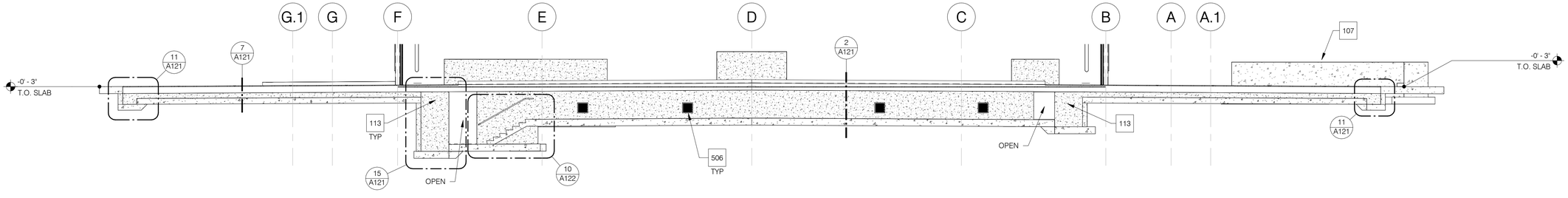

2 SECTION - INSPECTION BUILDING - PIT LEVEL
1/8" = 1'-0"

18924
Z. JAN E. LORANT
Date Signed 09/14/26
ARIZONA U.S.A.
EXPIRES 6/30/2027

Issue Date:	10 JULY 2026	
Revisions:	# Description	Date

gabor lorant architects
3326 n. 3rd avenue suite 200
phoenix, arizona 85013
tel: 602.667.9090
fax: 602.667.9133
gaborlorant.com
gla Project No.: 24102

ARIZONA DEPARTMENT OF TRANSPORTATION
PROJECT DELIVERY AND OPERATIONS DIVISION
PROJECT MANAGEMENT GROUP

SAN SIMON PORT OF ENTRY
FLOOR PLAN & SECTIONS - INSPECTION BUILDING - PIT LEVEL

ROUTE I-10
MILEPOST 383
STRUCTURE NO.

F.H.W.A. Arizona Division

STATE	PROJECT NO.	FEDERAL ID NO.	SHEET NO.	TOTAL SHEETS	RECORD DRAWING
ARIZ.	010 CH 383	010-F(238)T	88	200	

LOCATION: SAN SIMON PORT OF ENTRY (POE)

TRACS NO. F0728 01C

DWG NO. A120
___ OF ___

9/22/2026 3:03:05 PM

DO NOT SCALE DRAWINGS. DO NOT PLOT 'SCALE TO FIT'. THIS DOCUMENT IS FORMATTED FOR THE ANSI D (22"x34") SHEET SIZE.
FULL-SIZE PLOT ON ANSI D (22"x34") PAPER ONLY. HALF-SIZE PLOT ON 11"x17" PAPER ONLY.

STAPLE ZONE

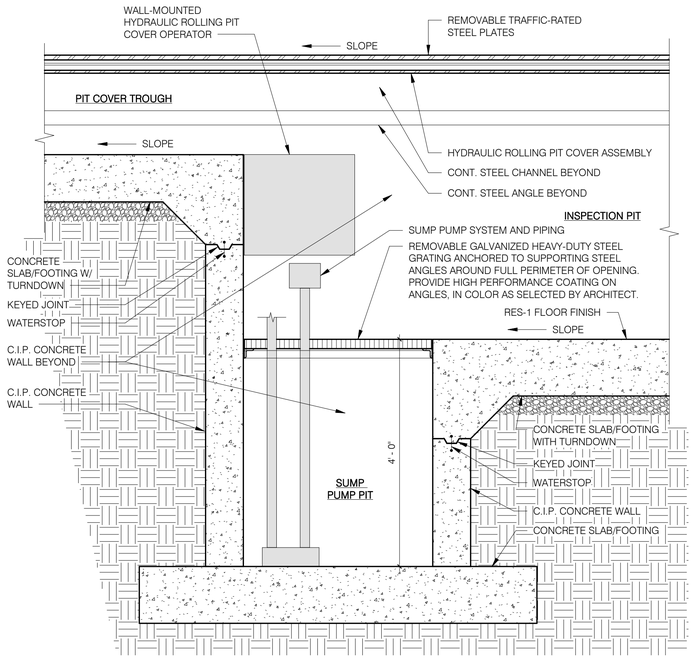

10 SUMP PUMP PIT - SECTION
3/4" = 1'-0"

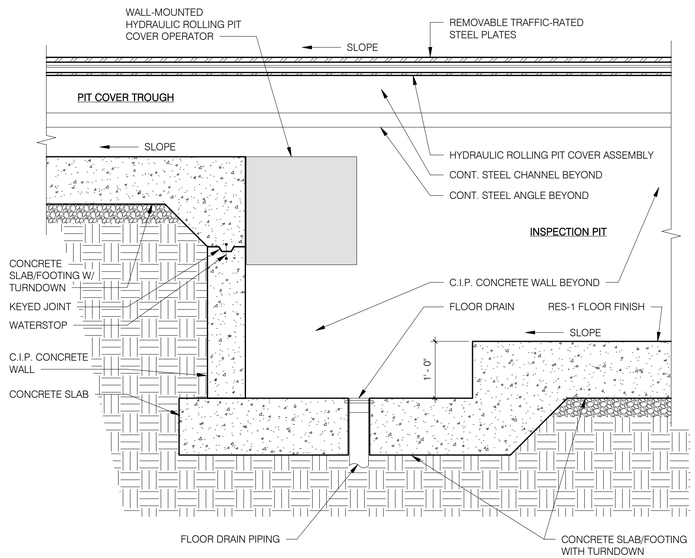

15 FLOOR DRAIN PIT - SECTION
3/4" = 1'-0"

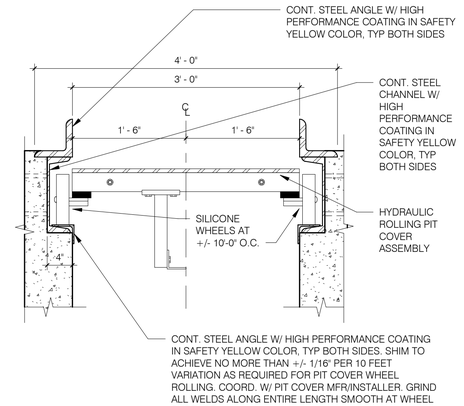

3 HYDRAULIC ROLLING PIT COVER
1" = 1'-0"

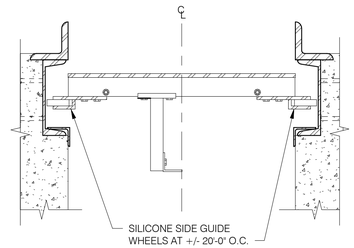

8 HYDRAULIC ROLLING PIT COVER - SIDE GUIDE WHEELS
1" = 1'-0"

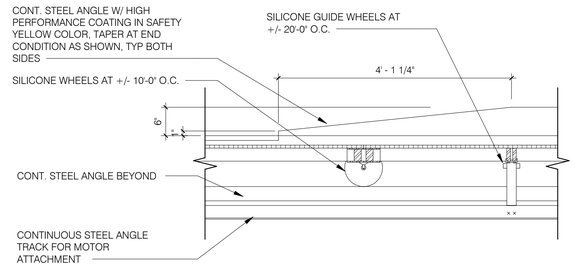

13 STEEL ANGLE FOR INSPECTION PIT END CONDITION
3/4" = 1'-0"

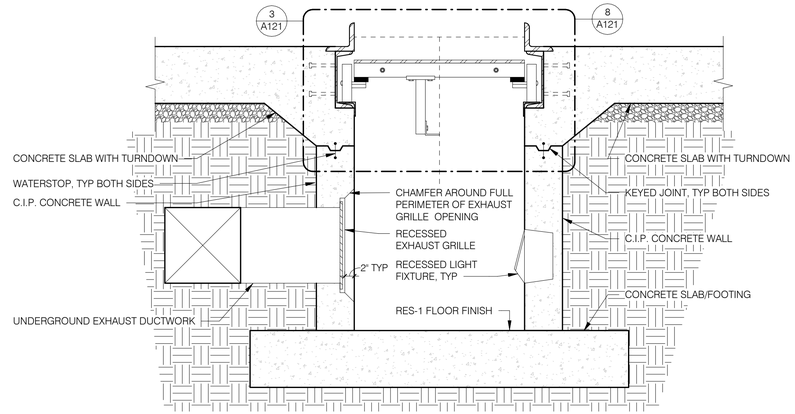

2 INSPECTION PIT - SECTION
3/4" = 1'-0"

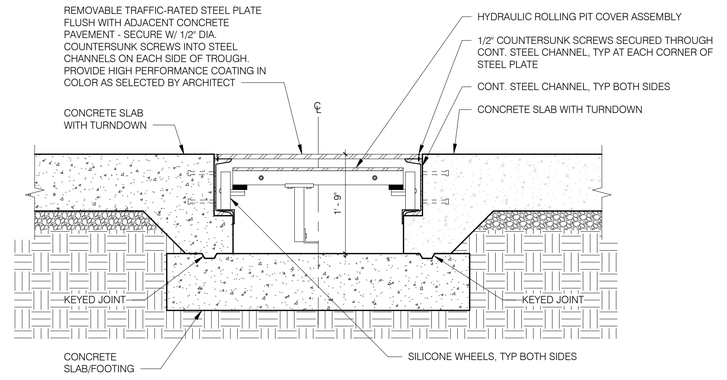

7 PIT COVER TROUGH - SECTION
3/4" = 1'-0"

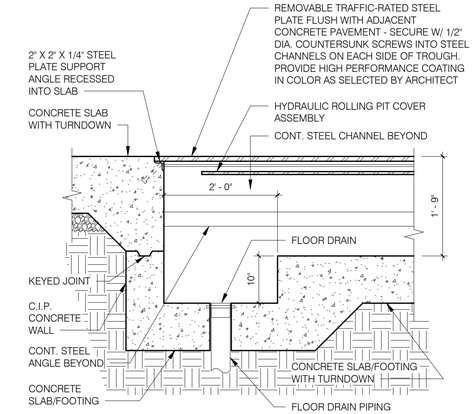

11 PIT COVER TROUGH - END CONDITION
3/4" = 1'-0"

ELIGIBLE FOR RENEWAL
18924
Z. JAN E. LORANT
Date Signed 07/10/26
ARIZONA U.S.A.
EXPIRES 6/30/2027

Issue Date:	10 JULY 2026	
Revisions:	# Description	Date

gabor lorant architects
3326 n. 3rd avenue suite 200
phoenix, arizona 85013
tel: 602.667.9090
fax: 602.667.9133
gaborlorant.com
gla Project No.: 24102

ARIZONA DEPARTMENT OF TRANSPORTATION
PROJECT DELIVERY AND OPERATIONS DIVISION
PROJECT MANAGEMENT GROUP

SAN SIMON PORT OF ENTRY
INSPECTION PIT DETAILS

ROUTE I-10
MILEPOST 383
STRUCTURE NO.

F.H.W.A. Arizona Division

STATE	PROJECT NO.	FEDERAL ID NO.	SHEET NO.	TOTAL SHEETS	RECORD DRAWING
ARIZ.	010 CH 383	010-F(238)T	89	200	

LOCATION: SAN SIMON PORT OF ENTRY (POE)
TRACS NO. F0728 01C
DWG NO. A121
___ OF ___

9/22/2026 3:03:05 PM

DO NOT SCALE DRAWINGS. DO NOT PLOT 'SCALE TO FIT'. THIS DOCUMENT IS FORMATTED FOR THE ANSI D (22"x34") SHEET SIZE.
FULL-SIZE PLOT ON ANSI D (22"x34") PAPER ONLY. HALF-SIZE PLOT ON 11"x17" PAPER ONLY.

STAPLE ZONE

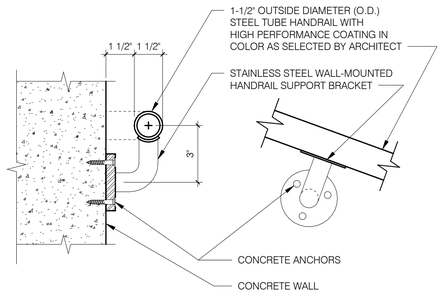

5 HANDRAIL & SUPPORT BRACKET IN CONCRETE WALL
3" = 1'-0"

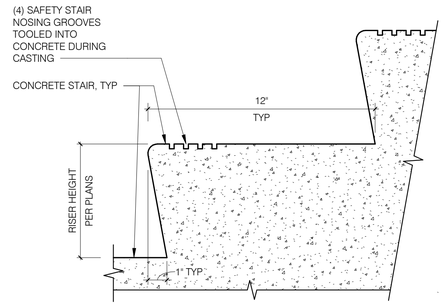

NOTE: AS AN ALTERNATE, CONTRACTOR MAY SUBMIT A PRE-MANUFACTURED ALUMINUM NOSING W/ ABRASIVE FILLER FOR APPROVAL BY ARCHITECT PRIOR TO CASTING CONCRETE. USE OF ALUMINUM NOSING IS CONDITIONED ON ARCHITECT APPROVAL OF WORKMANSHIP.

4 TYPICAL CAST-IN-PLACE CONCRETE STAIR NOSING
3" = 1'-0"

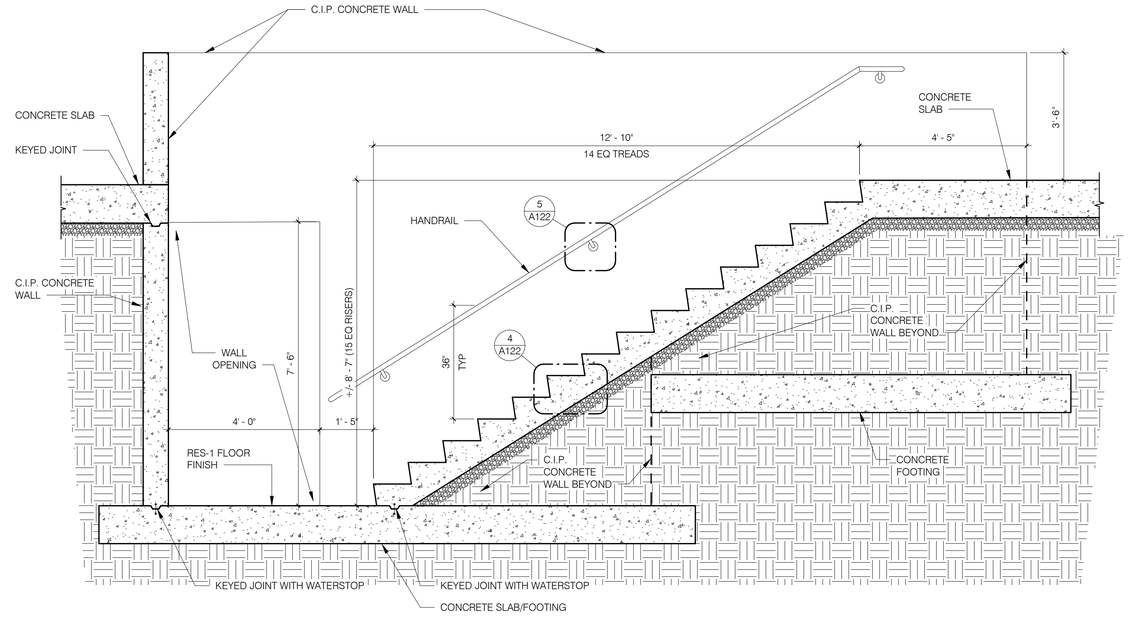

3 INSPECTION PIT CENTER STAIR - SECTION
1/2" = 1'-0"

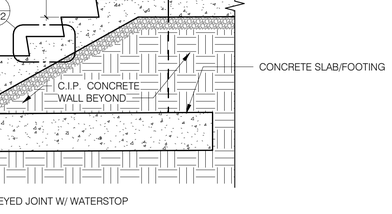

10 INSPECTION PIT SHORT STAIR - SECTION
1/2" = 1'-0"

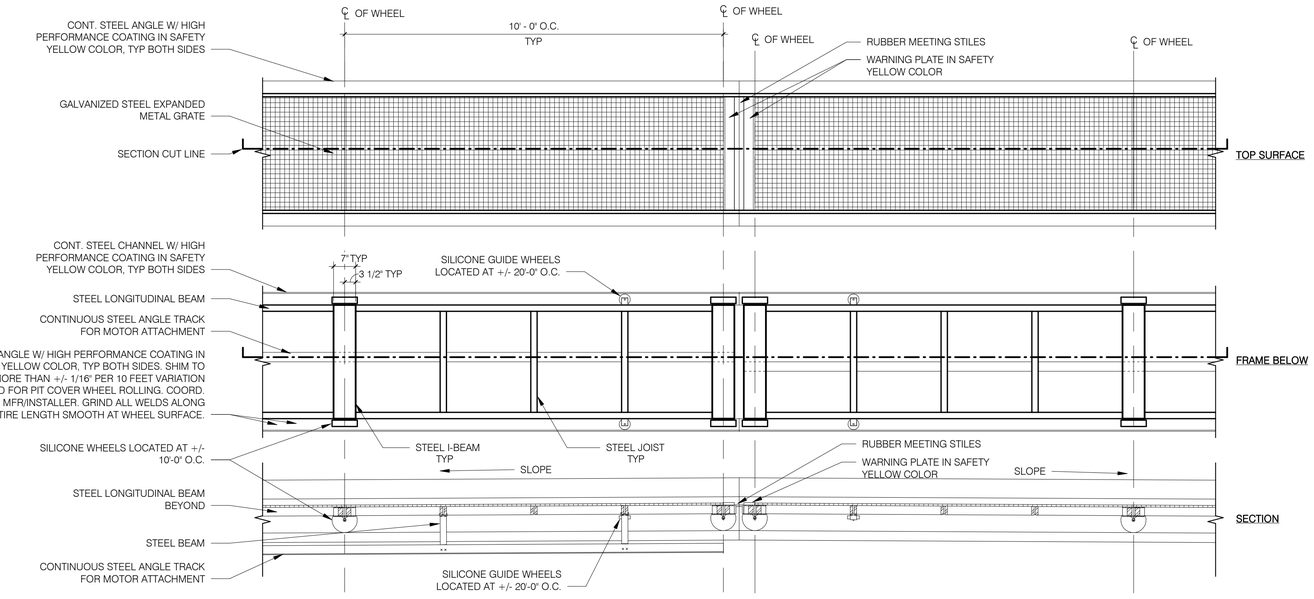

13 HYDRAULIC ROLLING PIT COVER - TYPICAL SEGMENT
1/2" = 1'-0"

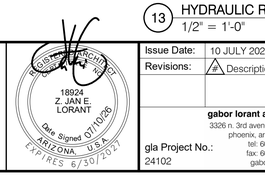

Issue Date:	10 JULY 2026		
Revisions:	#	Description	Date

gabor lorant architects
3326 n. 3rd avenue suite 200
phoenix, arizona 85013
tel: 602.667.9090
fax: 602.667.9133
gaborlorant.com
gla Project No.: 24102

ARIZONA DEPARTMENT OF TRANSPORTATION
PROJECT DELIVERY AND OPERATIONS DIVISION
PROJECT MANAGEMENT GROUP

SAN SIMON PORT OF ENTRY
INSPECTION PIT DETAILS

ROUTE	MILEPOST	STRUCTURE NO.
I-10	383	

F.H.W.A. Arizona Division	STATE	PROJECT NO.	FEDERAL ID NO.	SHEET NO.	TOTAL SHEETS	RECORD DRAWING
	ARIZ.	010 CH 383	010-F(238)T	90	200	

LOCATION: SAN SIMON PORT OF ENTRY (POE)

TRACS NO. F0728 01C

DWG NO. **A122**

____ OF ____

9/22/2026 3:03:05 PM

DO NOT SCALE DRAWINGS. DO NOT PLOT 'SCALE TO FIT'. THIS DOCUMENT IS FORMATTED FOR THE ANSI D (22"x34") SHEET SIZE.
FULL-SIZE PLOT ON ANSI D (22"x34") PAPER ONLY. HALF-SIZE PLOT ON 11"x17" PAPER ONLY.

STAPLE ZONE

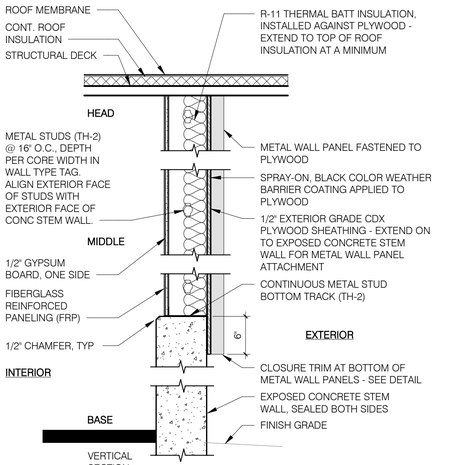

OPTION A
FULL HEIGHT

F WALL TYPE - EXTERIOR METAL FRAMING
1" = 1'-0"

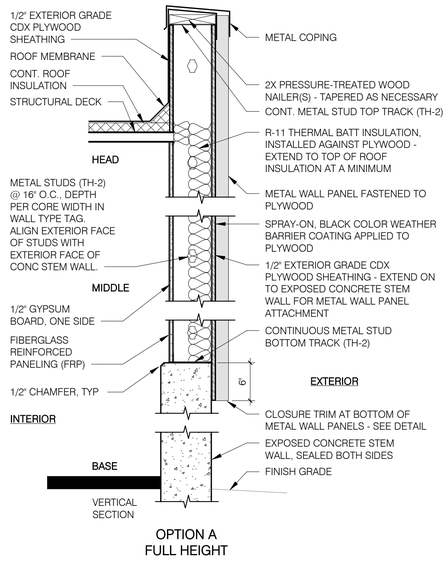

OPTION A
FULL HEIGHT

D WALL TYPE - EXTERIOR METAL FRAMING
1" = 1'-0"

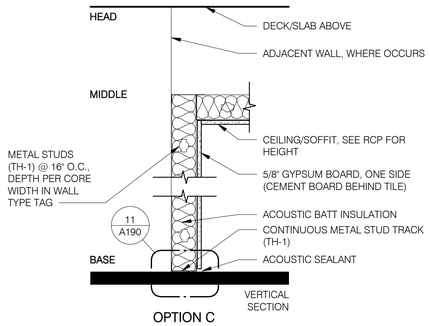

OPTION C
PARTIAL HEIGHT

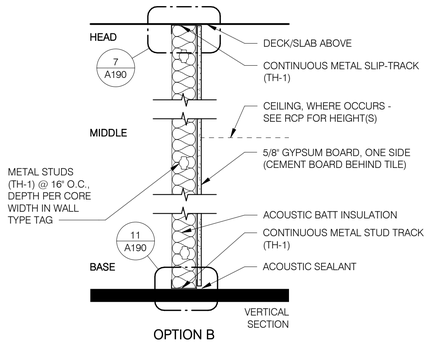

OPTION B
FULL HEIGHT

OPTION A
PARTIAL HEIGHT

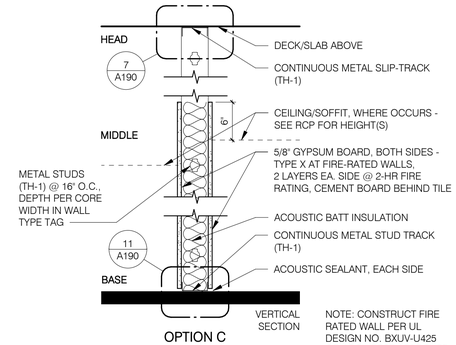

OPTION C
FULL HEIGHT - STUDS ONLY

NOTE: CONSTRUCT FIRE RATED WALL PER UL DESIGN NO. BXUV-U425 OR ARCHITECT APPROVED EQUIVALENT DESIGN.

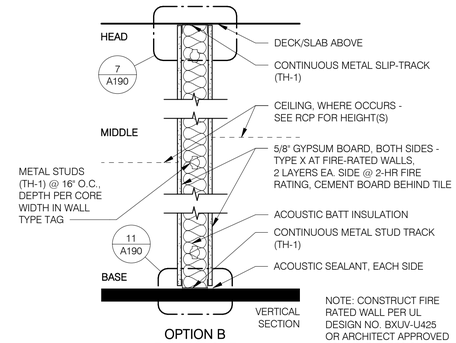

OPTION B
FULL HEIGHT

NOTE: CONSTRUCT FIRE RATED WALL PER UL DESIGN NO. BXUV-U425 OR ARCHITECT APPROVED EQUIVALENT DESIGN.

OPTION A
PARTIAL HEIGHT

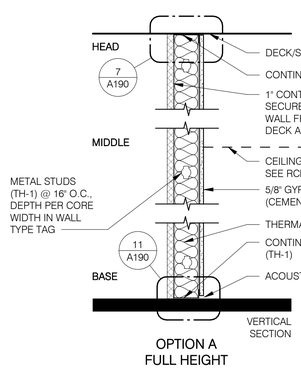

OPTION A
FULL HEIGHT

E WALL TYPE - EXTERIOR METAL FRAMING
1" = 1'-0"

C WALL TYPE - INTERIOR METAL FRAMING ON EXIST EXTR WALL
1" = 1'-0"

B WALL TYPE - INTERIOR METAL FRAMING
1" = 1'-0"

A WALL TYPE - INTERIOR METAL FRAMING
1" = 1'-0"

GENERAL NOTES - WALL TYPES

1. SEE PLANS, SECTIONS, AND INTERIOR ELEVATIONS FOR FINISHES APPLIED TO WALLS, SUCH AS TILE, VINYL WALL COVERING, ACOUSTIC PANELS, AND OTHER FINISHES.
2. SEE WALL FRAMING DETAILS FOR ADDITIONAL INFORMATION ON THE CONSTRUCTION OF WALLS AND TYPICAL CONDITIONS.
3. MINIMUM CONSTRUCTION REQUIREMENTS FOR EACH WALL TYPE:
   A. ALL METAL STUD FRAMING TO BE MINIMUM 22 MIL/57 KSI OR 30 MIL/33KSI, OR AS INDICATED IN STRUCTURAL DRAWINGS AND SPECIFICATIONS. PROVIDE HEAVIEST GAUGE/THICKNESS WHEN MORE THAN ONE THICKNESS IS INDICATED.
   B. ALL INTERIOR GYPSUM BOARD SHALL BE 5/8" THICK, U.N.O.
   C. MAXIMUM METAL STUD SPACING SHALL BE 16" O.C., U.N.O.
   D. PROVIDE STUDS OF DEPTH/WIDTH NOTED IN THE DRAWINGS OR IN REFERENCED DESIGN STANDARDS, APPROVALS AND TEST REPORTS.
   E. THERMAL AND ACOUSTIC INSULATION SHALL HAVE A THICKNESS EQUAL TO STUD DEPTH AND SHALL EXTEND THROUGHOUT THE WALL CAVITY, U.N.O.
4. PROVIDE METAL STUDS THAT ARE A MINIMUM THICKNESS OF 38 MIL (57 KSI STEEL) OR 43 MIL (33 KSI STEEL) WHEN WALL HEIGHT EXCEEDS THE FOLLOWING:
   A. 2-1/2" METAL STUDS: 10'-9"
   B. 3-5/8" METAL STUDS: 14'-0"
   C. 4" METAL STUDS: 14'-0"
   D. 6" METAL STUDS: 20'-0"
5. THE WALL TYPE EXTENDS THE ENTIRE LENGTH OF THE WALL WHERE IT IS SHOWN AND EXTENDS ACROSS DOORS, WINDOWS, GLAZING SYSTEMS, AND MINOR PROJECTIONS OR RECESSES, U.N.O. WALL TYPES END AT THE INTERSECTION WITH ANOTHER ROOM OR SPACE, DEFINED BY AN INSIDE OR OUTSIDE CORNER AND INCLUDING INTERVENING CORRIDORS, U.N.O. WHERE A WALL IS INTERRUPTED BY A WALL OPENING OR GLAZED WALL, THE WALL CONSTRUCTION ABOVE THE INTERRUPTION SHALL BE THE SAME AS DESIGNATED FOR THE WALL IN WHICH THE OPENING OR GLAZED WALL OCCURS, U.N.O.
6. ALL WALL TILE SHALL BE APPLIED OVER MOISTURE-RESISTANT GYPSUM BOARD OR CEMENT BOARD, U.N.O. USE MOISTURE-RESISTANT GYPSUM BOARD BEHIND WALL TILE AT RESTROOMS, BREAK ROOMS, AND OTHER SIMILAR WET LOCATIONS. USE CEMENT BOARD AT SHOWERS, CUSTODIAL SERVICE SINKS, AND OTHER AREAS WHERE WATER WILL BE IN CONTACT WITH THE TILE.
7. TAPE OUTER JOINTS OF GYPSUM BOARD ONLY. NO JOINTS EXCEPT AT STUDS.
8. GYPSUM BOARD SCREW EDGE AND FIELD SPACING PER GYPSUM BOARD MANUFACTURER'S RECOMMENDATIONS. ALL SCREWS SHALL PENETRATE STUDS.
9. BACKING/BLOCKING IN WALLS SHALL BE 6" WIDE, 18 GA. (43 MIL/33KSI) GALVANIZED FLAT STRAP OR FIRE-RETARDANT TREATED WOOD.

WALL TYPE TAG LEGEND

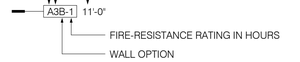

WALL CORE MATERIAL DEPTH LEGEND

METAL FRAMING
1 = 7/8" METAL FURRING/HAT CHANNEL
2 = 2-1/2" DEEP METAL STUDS
3 = 3-5/8" DEEP METAL STUDS
4 = 4" DEEP METAL STUDS
6 = 6" DEEP METAL STUDS
8 = 8" DEEP METAL STUDS

CONCRETE MASONRY UNITS
4 = 3-5/8" DEEP CMU
6 = 5-5/8" DEEP CMU
8 = 7 5/8" DEEP CMU
12 = 11-5/8" DEEP CMU

WOOD FRAMING
4 = 2" X 4" WOOD STUDS
6 = 2" X 6" WOOD STUDS
8 = 2" X 8" WOOD STUDS
10 = 2" X 10" WOOD STUDS

CONCRETE
5 = 5" THICK
6 = 6" THICK
7 = 7" THICK
8 = 8" THICK
10 = 10" THICK
12 = 12" THICK

METAL FRAMING MATERIAL THICKNESS LEGEND

TH-1 = MINIMUM 30 MIL (33KSI STEEL) OR 22 MIL (57 KSI STEEL) [EQUIVALENT TO 20 GAUGE]

TH-2 = MINIMUM 43 MIL (33KSI STEEL) OR 38 MIL (57 KSI STEEL) [EQUIVALENT TO 18 GAUGE]

TH-3 = MINIMUM 33 MIL (33KSI STEEL) [EQUIVALENT TO 20 GAUGE]



Issue Date:	10 JULY 2026	
Revisions:	# Description	Date

gabor lorant architects
3326 n. 3rd avenue suite 200
phoenix, arizona 85013
tel: 602.667.9090
fax: 602.667.9133
gaborlorant.com
gla Project No.: 24102

ARIZONA DEPARTMENT OF TRANSPORTATION
PROJECT DELIVERY AND OPERATIONS DIVISION
PROJECT MANAGEMENT GROUP

SAN SIMON PORT OF ENTRY
WALL TYPE DETAILS

ROUTE I-10
MILEPOST 383
STRUCTURE NO.

F.H.W.A. Arizona Division

STATE	PROJECT NO.	FEDERAL ID NO.	SHEET NO.	TOTAL SHEETS	RECORD DRAWING
ARIZ.	010 CH 383	010-F(238)T	91	200	

LOCATION: SAN SIMON PORT OF ENTRY (POE)

TRACS NO. F0728 01C

DWG NO. **A180**
___ OF ___

9/22/2026 3:03:06 PM

DO NOT SCALE DRAWINGS. DO NOT PLOT 'SCALE TO FIT'. THIS DOCUMENT IS FORMATTED FOR THE ANSI D (22"x34") SHEET SIZE.
FULL-SIZE PLOT ON ANSI D (22"x34") PAPER ONLY. HALF-SIZE PLOT ON 11"x17" PAPER ONLY.

STAPLE ZONE

GENERAL NOTES - WALL TYPES

1. SEE PLANS, SECTIONS, AND INTERIOR ELEVATIONS FOR FINISHES APPLIED TO WALLS, SUCH AS TILE, VINYL WALL COVERING, ACOUSTIC PANELS, AND OTHER FINISHES.

2. SEE WALL FRAMING DETAILS FOR ADDITIONAL INFORMATION ON THE CONSTRUCTION OF WALLS AND TYPICAL CONDITIONS.

3. MINIMUM CONSTRUCTION REQUIREMENTS FOR EACH WALL TYPE:
   A. ALL METAL STUD FRAMING TO BE MINIMUM 22 MIL/57 KSI OR 30 MIL/33KSI, OR AS INDICATED IN STRUCTURAL DRAWINGS AND SPECIFICATIONS. PROVIDE HEAVIEST GAUGE/THICKNESS WHEN MORE THAN ONE THICKNESS IS INDICATED.
   B. ALL INTERIOR GYPSUM BOARD SHALL BE 5/8" THICK, U.N.O.
   C. MAXIMUM METAL STUD SPACING SHALL BE 16" O.C., U.N.O.
   D. PROVIDE STUDS OF DEPTH/WIDTH NOTED IN THE DRAWINGS OR IN REFERENCED DESIGN STANDARDS, APPROVALS AND TEST REPORTS.
   E. THERMAL AND ACOUSTIC INSULATION SHALL HAVE A THICKNESS EQUAL TO STUD DEPTH AND SHALL EXTEND THROUGHOUT THE WALL CAVITY, U.N.O.

4. PROVIDE METAL STUDS THAT ARE A MINIMUM THICKNESS OF 38 MIL (57 KSI STEEL) OR 43 MIL (33 KSI STEEL) WHEN WALL HEIGHT EXCEEDS THE FOLLOWING:
   A. 2-1/2" METAL STUDS: 10'-9"
   B. 3-5/8" METAL STUDS: 14'-0"
   C. 4" METAL STUDS: 14'-0"
   D. 6" METAL STUDS: 20'-0"

5. THE WALL TYPE EXTENDS THE ENTIRE LENGTH OF THE WALL WHERE IT IS SHOWN AND EXTENDS ACROSS DOORS, WINDOWS, GLAZING SYSTEMS, AND MINOR PROJECTIONS OR RECESSES, U.N.O. WALL TYPES END AT THE INTERSECTION WITH ANOTHER ROOM OR SPACE, DEFINED BY AN INSIDE OR OUTSIDE CORNER AND INCLUDING INTERVENING CORRIDORS, U.N.O. WHERE A WALL IS INTERRUPTED BY A WALL OPENING OR GLAZED WALL, THE WALL CONSTRUCTION ABOVE THE INTERRUPTION SHALL BE THE SAME AS DESIGNATED FOR THE WALL IN WHICH THE OPENING OR GLAZED WALL OCCURS, U.N.O.

6. ALL WALL TILE SHALL BE APPLIED OVER MOISTURE-RESISTANT GYPSUM BOARD OR CEMENT BOARD, U.N.O. USE MOISTURE-RESISTANT GYPSUM BOARD BEHIND WALL TILE AT RESTROOMS, BREAK ROOMS, AND OTHER SIMILAR WET LOCATIONS. USE CEMENT BOARD AT SHOWERS, CUSTODIAL SERVICE SINKS, AND OTHER AREAS WHERE WATER WILL BE IN CONTACT WITH THE TILE.

7. TAPE OUTER JOINTS OF GYPSUM BOARD ONLY. NO JOINTS EXCEPT AT STUDS.

8. GYPSUM BOARD SCREW EDGE AND FIELD SPACING PER GYPSUM BOARD MANUFACTURER'S RECOMMENDATIONS. ALL SCREWS SHALL PENETRATE STUDS.

9. BACKING/BLOCKING IN WALLS SHALL BE 6" WIDE, 18 GA. (43 MIL/33KSI) GALVANIZED FLAT STRAP OR FIRE-RETARDANT TREATED WOOD.

WALL TYPE TAG LEGEND

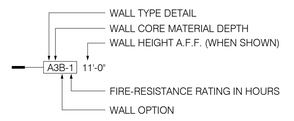

WALL CORE MATERIAL DEPTH LEGEND

METAL FRAMING	WOOD FRAMING
1 = 7/8" METAL FURRING/HAT CHANNEL	4 = 2" X 4" WOOD STUDS
2 = 2-1/2" DEEP METAL STUDS	6 = 2" X 6" WOOD STUDS
3 = 3-5/8" DEEP METAL STUDS	8 = 2" X 8" WOOD STUDS
4 = 4" DEEP METAL STUDS	10 = 2" X 10" WOOD STUDS
6 = 6" DEEP METAL STUDS	
8 = 8" DEEP METAL STUDS	CONCRETE
	5 = 5" THICK
CONCRETE MASONRY UNITS	6 = 6" THICK
4 = 3-5/8" DEEP CMU	7 = 7" THICK
6 = 5-5/8" DEEP CMU	8 = 8" THICK
8 = 7 5/8" DEEP CMU	10 = 10" THICK
12 = 11-5/8" DEEP CMU	12 = 12" THICK

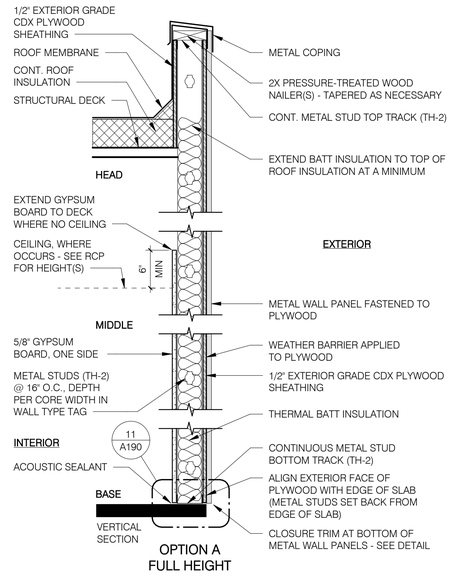

G WALL TYPE - EXTERIOR METAL FRAMING
1" = 1'-0"

METAL FRAMING MATERIAL THICKNESS LEGEND

TH-1	=	MINIMUM 30 MIL (33KSI STEEL) OR 22 MIL (57 KSI STEEL) [EQUIVALENT TO 20 GAUGE]
TH-2	=	MINIMUM 43 MIL (33KSI STEEL) OR 38 MIL (57 KSI STEEL) [EQUIVALENT TO 18 GAUGE]
TH-3	=	MINIMUM 33 MIL (33KSI STEEL) [EQUIVALENT TO 20 GAUGE]

REGISTERED ARCHITECT
18924
Z. JAN E. LORANT
Date Signed 07/10/26
ARIZONA, U.S.A.
EXPIRES 6/30/2027

Issue Date:	10 JULY 2026	
Revisions:	# Description	Date

gabor lorant architects
3326 n. 3rd avenue suite 200
phoenix, arizona 85013
tel: 602.667.9090
fax: 602.667.9133
gaborlorant.com
gla Project No.: 24102

ARIZONA DEPARTMENT OF TRANSPORTATION
PROJECT DELIVERY AND OPERATIONS DIVISION
PROJECT MANAGEMENT GROUP

SAN SIMON PORT OF ENTRY
WALL TYPE DETAILS

ROUTE I-10
MILEPOST 383
STRUCTURE NO.

F.H.W.A. Arizona Division

STATE	PROJECT NO.	FEDERAL ID NO.	SHEET NO.	TOTAL SHEETS	RECORD DRAWING
ARIZ.	010 CH 383	010-F(238)T	92	200	

LOCATION: SAN SIMON PORT OF ENTRY (POE)

TRACS NO. F0728 01C

DWG NO. **A181**
___ OF ___

9/22/2026 3:03:06 PM

DO NOT SCALE DRAWINGS. DO NOT PLOT 'SCALE TO FIT'. THIS DOCUMENT IS FORMATTED FOR THE ANSI D (22"x34") SHEET SIZE.
FULL-SIZE PLOT ON ANSI D (22"x34") PAPER ONLY. HALF-SIZE PLOT ON 11"x17" PAPER ONLY.

STAPLE ZONE

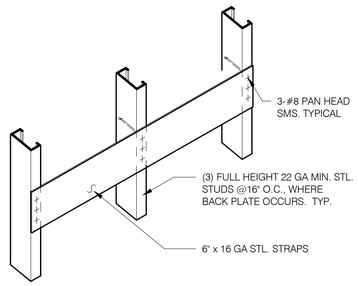

NOTE: PROVIDE BACKING STRAPS AT ALL LOCATIONS WHERE WALL-MOUNTED ITEMS ARE INDICATED OR REQUIRED.

5 BACKING IN METAL STUD WALLS
1 1/2" = 1'-0"

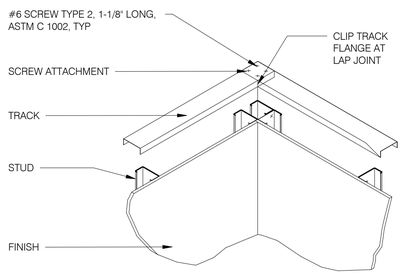

4 TYPICAL METAL STUD CORNER
3/4" = 1'-0"

NOTES:

1. METAL STUD.
2. CONTINUOUS STUD TRACK, TOP & BOTTOM OF HEADER.
3. DOUBLE STUDS, TRIPLE STUDS, OR QUAD STUDS - SEE DOOR AND GLAZING SYSTEM DETAILS.

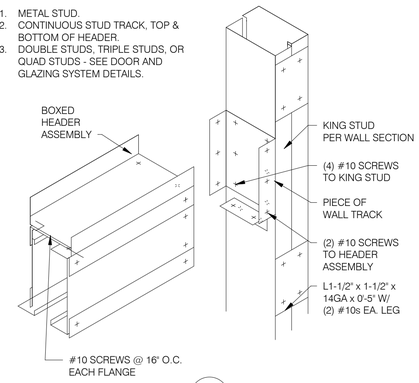

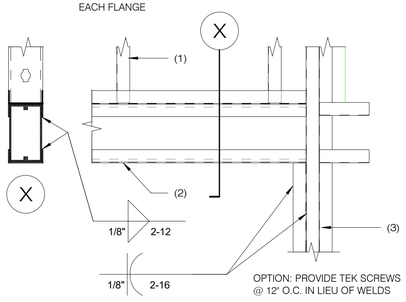

MAX WIDTH OF OPENING	STUD SIZE OVER OPENING
0' - 3'-4"	(2) 4" 43 MIL (33 KSI)
3'-5" - 8'-0"	(2) 6" 43 MIL (33 KSI)
8'-1" - 10'-0"	(2) 8" 43 MIL (33 KSI)
10'-1" - 20'-0"	(2) 12" 68 MIL (33KSI)

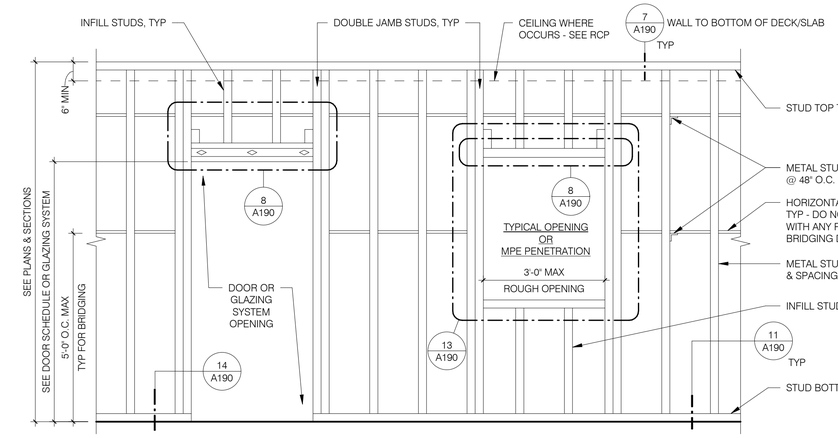

NOTES:

1. PROVIDE BOX HEADERS IF REQUIRED BY SPECIFIC REFERENCED DETAILS, REGARDLESS OF OPENING WIDTH.
2. DETAILS ON THIS SHEET REFER TO TYPICAL CONDITIONS. SPECIFIC DETAILS TAKE PRECEDENCE OVER ANY TYPICAL CONDITIONS SHOWN.

2 TYPICAL INTERIOR METAL STUD WALL FRAMING (ELEVATION)
1/2" = 1'-0"

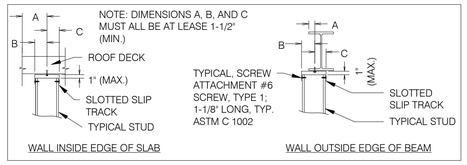

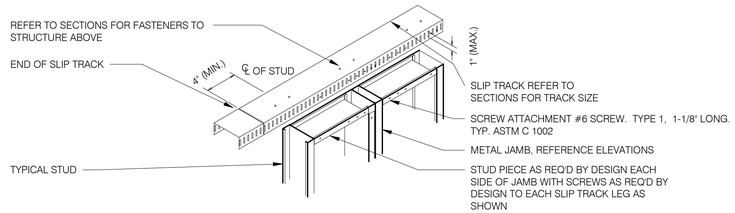

7 SLOTTED TOP SLIP-TRACK - TYPICAL AT TOP OF FULL HEIGHT WALLS
1/2" = 1'-0"

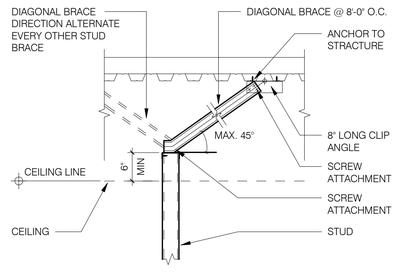

NOTE:
INTERSECTING FULL HEIGHT PARTITION IS ACCEPTABLE AS AN INTERMEDIATE WALL BRACE.

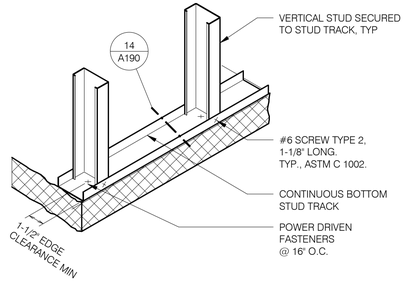

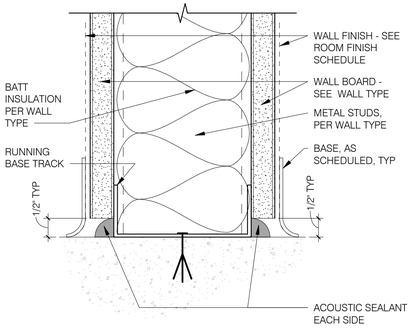

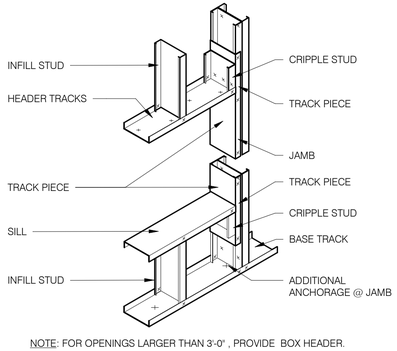

NOTE: FOR OPENINGS LARGER THAN 3'-0" , PROVIDE BOX HEADER.

14 ACOUSTIC SEALANT AT WALLS
6" = 1'-0"

13 NON-LOAD BEARING OPENING IN METAL STUD WALLS
3/4" = 1'-0"

12 NON-LOAD BEARING DIAGONAL WALL BRACE (KICKER)
3/4" = 1'-0"

11 BOTTOM TRACK IN METAL STUD WALLS
3/4" = 1'-0"

ARCHITECTURE REGISTERED
18924
Z. JAN E. LORANT
Date Signed 07/10/26
ARIZONA U.S.A.
EXPIRES 6/30/2027

Issue Date:	10 JULY 2026	
Revisions:	# Description	Date

gabor lorant architects
3326 n. 3rd avenue suite 200
phoenix, arizona 85013
tel: 602.667.9090
fax: 602.667.9133
gaborlorant.com
gla Project No.: 24102

ARIZONA DEPARTMENT OF TRANSPORTATION
PROJECT DELIVERY AND OPERATIONS DIVISION
PROJECT MANAGEMENT GROUP

SAN SIMON PORT OF ENTRY
WALL FRAMING DETAILS

ROUTE I-10
MILEPOST 383
STRUCTURE NO.

F.H.W.A. Arizona Division

STATE	PROJECT NO.	FEDERAL ID NO.	SHEET NO.	TOTAL SHEETS	RECORD DRAWING
ARIZ.	010 CH 383	010-F(238)T	93	200	

LOCATION: SAN SIMON PORT OF ENTRY (POE)

TRACS NO. F0728 01C

DWG NO. A190

___ OF ___

9/22/2026 3:03:06 PM

DO NOT SCALE DRAWINGS. DO NOT PLOT 'SCALE TO FIT'. THIS DOCUMENT IS FORMATTED FOR THE ANSI D (22"x34") SHEET SIZE.
FULL-SIZE PLOT ON ANSI D (22"x34") PAPER ONLY. HALF-SIZE PLOT ON 11"x17" PAPER ONLY.

STAPLE ZONE

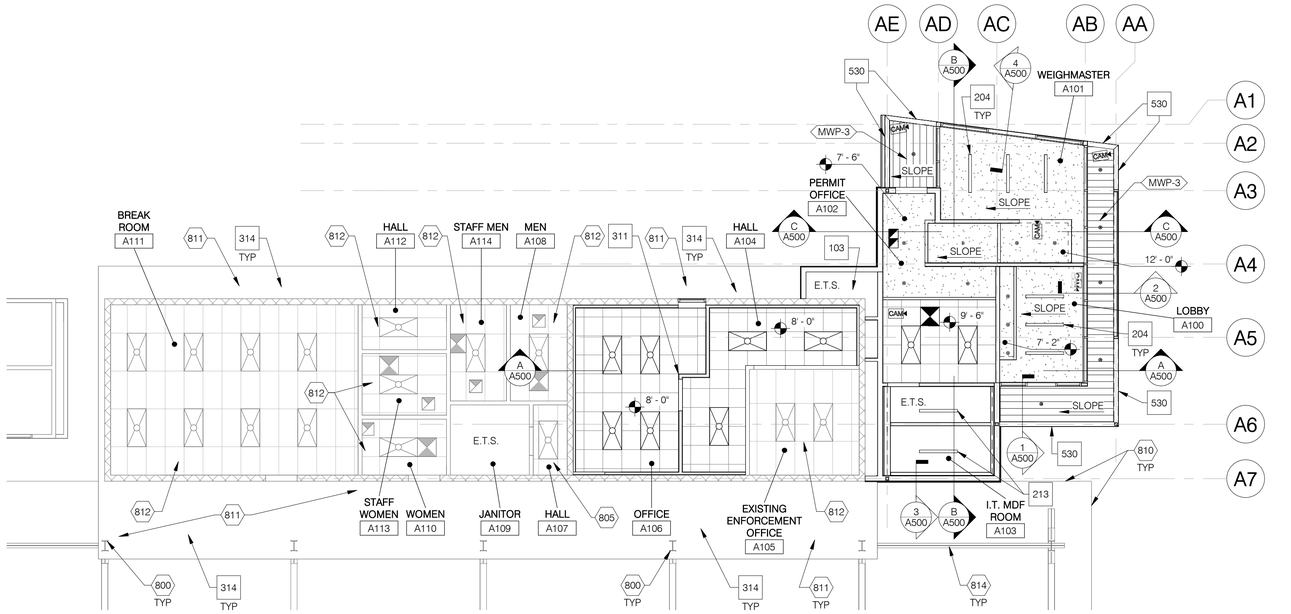

1 REFLECTED CEILING PLAN - ADMIN BUILDING
1/8" = 1'-0"

PLAN NORTH NORTH

GENERAL NOTES

1. SEE FLOOR PLAN FOR WALL TYPES AND SHEET A190 FOR WALL FRAMING DETAILS.
2. ALL GYPSUM BOARD CEILINGS AND SOFFITS SHALL BE TEXTURED AND PAINTED.
3. ALL CEILING ELEVATIONS INDICATED ARE ABOVE FINISH FLOOR ELEVATION, U.N.O.
4. COORDINATE LAYOUT OF CEILINGS WITH MECHANICAL, PLUMBING AND ELECTRICAL DOCUMENTS. BRING ANY CONFLICTS TO THE ATTENTION OF THE ARCHITECT PRIOR TO INSTALLATION.
5. ITEMS LOCATED IN CEILING TILES SHALL BE CENTERED AT THE MIDPOINT OF EACH TILE, TYPICAL. WHERE TWO ITEMS OCCUR, LOCATE ITEMS AT THIRD POINTS. WHERE THREE ITEMS OCCUR, LOCATED ITEMS AT QUARTER POINTS.
6. ACCESS PANELS IN FIRE-RATED CEILINGS SHALL HAVE A MATCHING FIRE RATING TO THE CEILING.
7. ALL AREAS WITH BATT INSULATION, INCLUDING AREAS ACCESSED FOR MAINTENANCE ABOVE CEILINGS, OTHER THAN AT INACCESSIBLE AREAS WITH HARD LID CEILINGS, SHALL BE COVERED WITH AN INSULATION COVER - SEE THERMAL INSULATION SPECIFICATION.
8. VERIFY ALL EXISTING DIMENSIONS IN FIELD.
9. SEE FINISH & MATERIAL LEGEND.

RCP LEGEND

- 2x4 / 2x2 — EXISTING SUSPENDED ACOUSTICAL CEILING TILE (ACT) SYSTEM TO REMAIN
- 2x4 / 2x2 — SUSPENDED ACOUSTICAL CEILING TILE SYSTEM (ACT-1)
- EXISTING GYPSUM BOARD CEILING OR SOFFIT SYSTEM TO REMAIN
- GYPSUM BOARD CEILING OR SOFFIT SYSTEM - 2-1/2" METAL STUD FRAMING AND 1/2" GB TYP, U.N.O.
- E.T.S. — EXPOSED TO STRUCTURE
- EXISTING ELECTRICAL LIGHT FIXTURE TO REMAIN
- ELECTRICAL LIGHT FIXTURE
- EXISTING MECHANICAL SUPPLY AIR DIFFUSER TO REMAIN
- MECHANICAL SUPPLY AIR DIFFUSER
- EXISTING MECHANICAL RETURN AIR DIFFUSER TO REMAIN
- MECHANICAL RETURN AIR DIFFUSER
- EXISTING MECHANICAL EXHAUST AIR GRILLE TO REMAIN
- MECHANICAL EXHAUST AIR GRILLE
- 8' - 0" 9' - 6" — HEIGHT OF CEILING OR SOFFIT ABOVE FINISH FLOOR
- CAM — CCTV CAMERA - SEE CIVIL & ELECTRICAL DRAWINGS

KEYNOTES - NEW WORK

103	MECHANICAL CHASE
204	SUSPENDED LINEAR LIGHT FIXTURE - FACTORY FINISH IN COLOR AS SELECTED BY ARCHITECT
213	LINEAR LIGHT FIXTURE MOUNTED TO UNDERSIDE OF ROOF STRUCTURE - FACTORY FINISH IN COLOR AS SELECTED BY ARCHITECT
311	LAYOUT CEILING SYSTEM FROM THIS CORNER
314	PROVIDE PAINTED FINISH ON UNDERSIDE AND PERIMETER FLASHING/TRIM OF EXISTING ROOF OVERHANG, INCLUDING PAINTING ALL OVERHANG-MOUNTED ITEMS, EXCEPT FOR SECURITY CCTV CAMERAS, SPEAKERS, AND OTHER ITEMS WITH FACTORY FINISHES. FOR EXPOSED STEEL ITEMS PROVIDE HIGH PERFORMANCE COATING. COLORS FOR PAINT AND HIGH PERFORMANCE COATING AS SELECTED BY ARCHITECT.
530	STEEL TUBE BEAM FASCIA WITH HIGH PERFORMANCE COATING - COLOR AS SELECTED BY ARCHITECT

KEYNOTES - EXISTING

800	EXISTING STEEL COLUMN TO REMAIN
805	EXISTING CEILING AND CEILING-MOUNTED ITEMS (INCLUDING LIGHT FIXTURES) TO REMAIN - PATCH AND REPAIR AS NECESSARY DUE TO WORK ABOVE CEILING
810	EXISTING STEEL SHADE CANOPY TO REMAIN IN ITS ENTIRETY
811	EXISTING ROOF OVERHANG TO REMAIN
812	EXISTING CEILING AND CEILING-MOUNTED ITEMS (INCLUDING LIGHT FIXTURES) TO REMAIN
814	EXISTING STEEL SHADE CANOPY TRUSS TO REMAIN

REGISTERED ARCHITECT — 18924 — Z. JAN E. LORANT — Date Signed 07/10/26 — ARIZONA, U.S.A. — EXPIRES 6/30/2027

Issue Date:	10 JULY 2026	
Revisions:	# Description	Date

gabor lorant architects
3326 n. 3rd avenue suite 200
phoenix, arizona 85013
tel: 602.667.9090
fax: 602.667.9133
gaborlorant.com
gla Project No.: 24102

ARIZONA DEPARTMENT OF TRANSPORTATION
PROJECT DELIVERY AND OPERATIONS DIVISION
PROJECT MANAGEMENT GROUP

SAN SIMON PORT OF ENTRY
REFLECTED CEILING PLAN & DETAILS - ADMIN BUILDING

ROUTE I-10 | MILEPOST 383 | STRUCTURE NO.

F.H.W.A. Arizona Division	STATE	PROJECT NO.	FEDERAL ID NO.	SHEET NO.	TOTAL SHEETS	RECORD DRAWING
	ARIZ.	010 CH 383	010-F(238)T	94	200	

LOCATION: SAN SIMON PORT OF ENTRY (POE)

TRACS NO. F0728 01C

DWG NO. **A200**

____ OF ____

9/22/2026 3:03:07 PM

DO NOT SCALE DRAWINGS. DO NOT PLOT 'SCALE TO FIT'. THIS DOCUMENT IS FORMATTED FOR THE ANSI D (22"x34") SHEET SIZE.
FULL-SIZE PLOT ON ANSI D (22"x34") PAPER ONLY. HALF-SIZE PLOT ON 11"x17" PAPER ONLY.

STAPLE ZONE

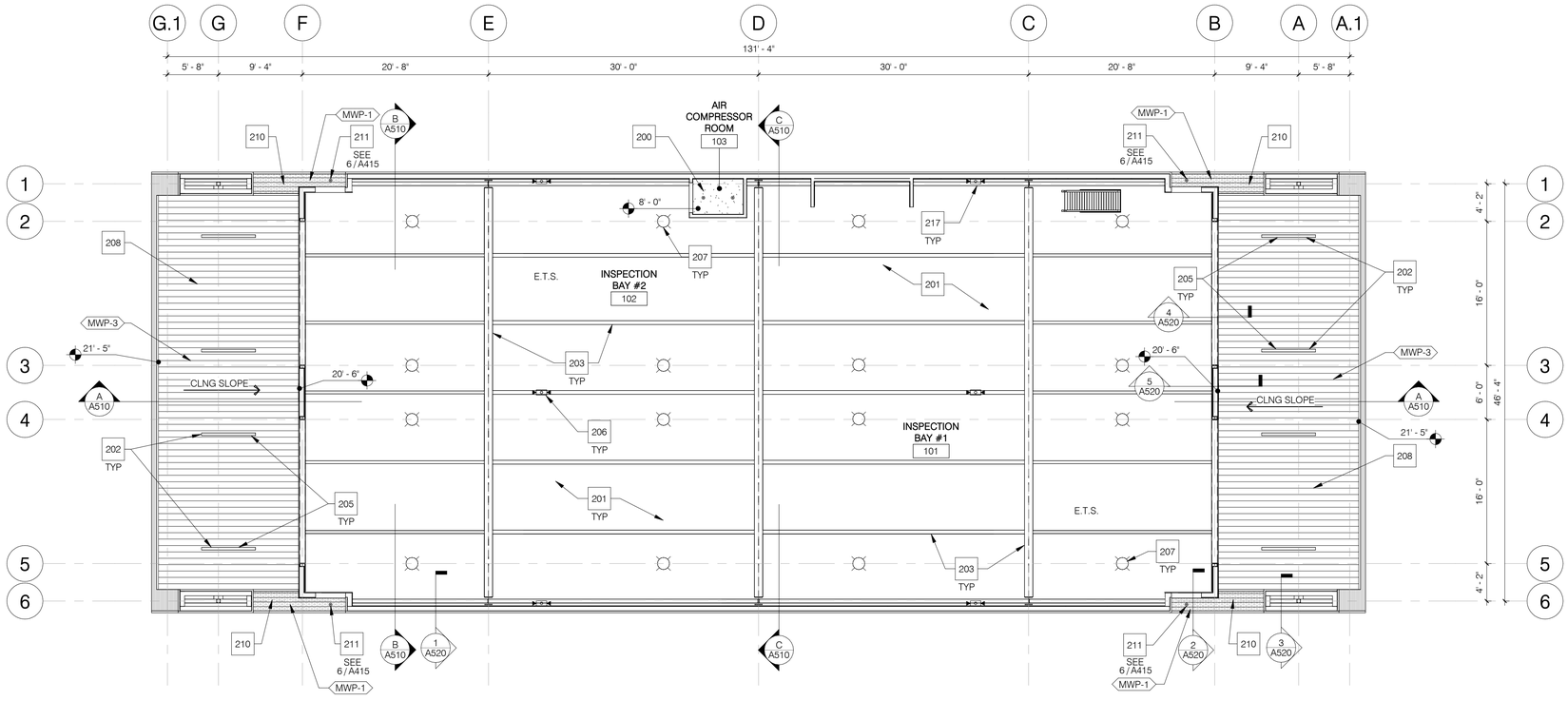

1 REFLECTED CEILING PLAN - INSPECTION BUILDING
1/8" = 1'-0"

PLAN NORTH NORTH

GENERAL NOTES

1. SEE FLOOR PLAN FOR WALL TYPES AND SHEET A190 FOR WALL FRAMING DETAILS.
2. ALL GYPSUM BOARD CEILINGS AND SOFFITS SHALL BE TEXTURED AND PAINTED.
3. ALL CEILING ELEVATIONS INDICATED ARE ABOVE FINISH FLOOR ELEVATION, U.N.O.
4. COORDINATE LAYOUT OF CEILINGS WITH MECHANICAL, PLUMBING AND ELECTRICAL DOCUMENTS. BRING ANY CONFLICTS TO THE ATTENTION OF THE ARCHITECT PRIOR TO INSTALLATION.
5. ITEMS LOCATED IN CEILING TILES SHALL BE CENTERED AT THE MIDPOINT OF EACH TILE, TYPICAL. WHERE TWO ITEMS OCCUR, LOCATE ITEMS AT THIRD POINTS. WHERE THREE ITEMS OCCUR, LOCATED ITEMS AT QUARTER POINTS.
6. ACCESS PANELS IN FIRE-RATED CEILINGS SHALL HAVE A MATCHING FIRE RATING TO THE CEILING.
7. ALL AREAS WITH BATT INSULATION, INCLUDING AREAS ACCESSED FOR MAINTENANCE ABOVE CEILINGS, OTHER THAN AT INACCESSIBLE AREAS WITH HARD LID CEILINGS, SHALL BE COVERED WITH AN INSULATION COVER - SEE THERMAL INSULATION SPECIFICATION.
8. VERIFY ALL EXISTING DIMENSIONS IN FIELD.
9. SEE FINISH & MATERIAL LEGEND.

RCP LEGEND

2x4 / 2x2	SUSPENDED ACOUSTICAL CEILING TILE (ACT) SYSTEM
	GYPSUM BOARD CEILING OR SOFFIT SYSTEM - 2-1/2" METAL STUD FRAMING AT 16" O.C. WITH 1/2" GYPSUM BOARD
E.T.S.	EXPOSED TO STRUCTURE
	ELECTRICAL LIGHT FIXTURE
	MECHANICAL SUPPLY AIR DIFFUSER
	MECHANICAL RETURN AIR DIFFUSER
	MECHANICAL EXHAUST AIR GRILLE
8' - 0" 9' - 6"	HEIGHT OF CEILING OR SOFFIT ABOVE FINISH FLOOR

KEYNOTES - NEW WORK

200	PROVIDE FINISHED GYPSUM BOARD CEILING CAP WITH PAINTED FINISH ON BOTH SIDES OF THE TOP OF THIS ROOM
201	SLOPED STEEL DECKING - WITH PAINTED FINISH IN COLOR AS SELECTED BY ARCHITECT WHERE EXPOSED TO VIEW
202	RECESSED LINEAR LIGHT FIXTURE - FACTORY FINISH IN COLOR AS SELECTED BY ARCHITECT
203	STRUCTURAL STEEL - WITH PAINTED FINISH IN COLOR AS SELECTED BY ARCHITECT WHERE EXPOSED TO VIEW
205	CENTER LIGHT FIXTURE IN METAL CEILING PANEL
206	DUAL HEAD EMERGENCY LIGHT
207	HIGH BAY LIGHT FIXTURE
208	CEILING SYSTEM: 3-5/8" METAL STUD FRAMING WITH 1/2" EXTERIOR GRADE PLYWOOD SHEATHING AND METAL CEILING PANELS. PROVIDE COMPRESSION STRUTS AT 48" O.C. FOR WIND UPLIFT.
210	SOFFIT SYSTEM: 3-5/8" METAL STUD FRAMING WITH 1/2" EXTERIOR GRADE PLYWOOD SHEATHING AND METAL CEILING PANELS
211	RECESSED DOWNLIGHT - PROVIDE METAL TRIM FRAME WITHIN METAL SOFFIT PANEL
217	WALL-MOUNTED DUAL HEAD EMERGENCY LIGHT

STEPHEN GABOR LORANT REGISTERED ARCHITECT
18924
Z. JAN E. LORANT
Date Signed 07/10/26
ARIZONA U.S.A.
EXPIRES 6/30/2027

Issue Date:	10 JULY 2026	
Revisions:	# Description	Date

gabor lorant architects
3326 n. 3rd avenue suite 200
phoenix, arizona 85013
tel: 602.667.9090
fax: 602.667.9133
gaborlorant.com

gla Project No.: 24102

gla

ARIZONA DEPARTMENT OF TRANSPORTATION
PROJECT DELIVERY AND OPERATIONS DIVISION
PROJECT MANAGEMENT GROUP

SAN SIMON PORT OF ENTRY
REFLECTED CEILING PLAN & DETAILS - INSPECTION BUILDING

ROUTE	MILEPOST	STRUCTURE NO.
I-10	383	

F.H.W.A. Arizona Division	STATE	PROJECT NO.	FEDERAL ID NO.	SHEET NO.	TOTAL SHEETS	RECORD DRAWING
	ARIZ.	010 CH 383	010-F(238)T	95	200	

LOCATION: SAN SIMON PORT OF ENTRY (POE)

TRACS NO. F0728 01C

DWG NO. **A210**

____ OF ____

9/22/2026 3:03:07 PM

DO NOT SCALE DRAWINGS. DO NOT PLOT 'SCALE TO FIT'. THIS DOCUMENT IS FORMATTED FOR THE ANSI D (22"x34") SHEET SIZE.
FULL-SIZE PLOT ON ANSI D (22"x34") PAPER ONLY. HALF-SIZE PLOT ON 11"x17" PAPER ONLY.

STAPLE ZONE

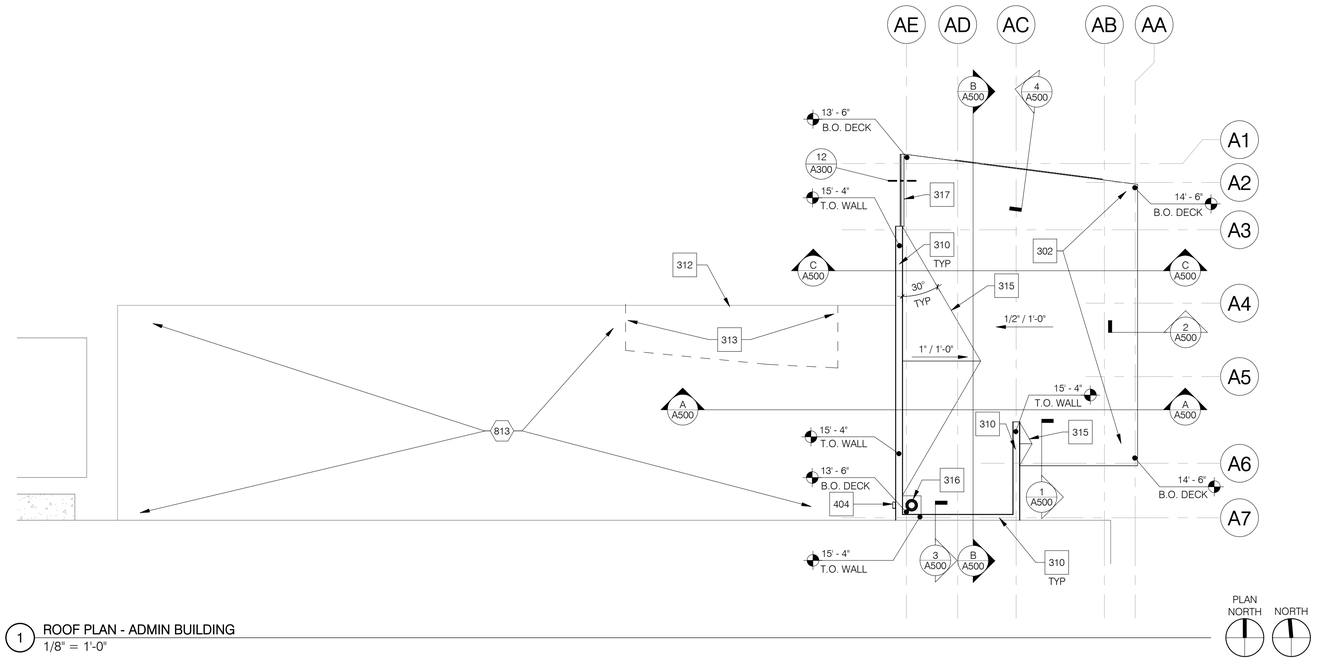

1 ROOF PLAN - ADMIN BUILDING
1/8" = 1'-0"

GENERAL NOTES

1. ROOF SLOPES SHALL BE A MINIMUM OF 1/4" PER FOOT, U.N.O.
2. PROVIDE ADDITIONAL CRICKETS AT EQUIPMENT AND OTHER CONDITIONS AS NECESSARY TO PROVIDE POSITIVE SLOPE TO DRAIN AT 1/2" PER FOOT MINIMUM THROUGHOUT THE ROOF, U.N.O.
3. COORDINATE ROOF PLAN WITH STRUCTURAL, MECHANICAL, PLUMBING AND ELECTRICAL DRAWINGS. BRING ANY CONFLICTS TO THE ATTENTION OF THE ARCHITECT PRIOR TO INSTALLATION.
4. VERIFY ALL EXISTING DIMENSIONS IN FIELD.

KEYNOTES - EXISTING

813	EXISTING ROOF TO REMAIN - PATCH AS NECESSARY (TO MATCH EXISTING) DUE TO WORK

KEYNOTES - NEW WORK

302	ROOFING SYSTEM: TPO MEMBRANE OVER 1/2" HD POLYISO COVER BOARD AND 4" POLYISO INSULATION BOARD ON STRUCTURAL STEEL DECKING (R-25 MINIMUM)
310	PRE-FINISHED METAL COPING WALL CAP
312	PROVIDE PAINTED ROOF OVERHANG METAL FLASHING TO MATCH EXISTING WHERE EXISTING WEIGHMASTER BOOTH ROOF WAS REMOVED
313	PATCH EXISTING ADMIN ROOF STRUCTURE AND ROOFING SYSTEM (TO MATCH EXISTING) AS NECESSARY DUE TO DEMOLITION OF WEIGHMASTER BOOTH ROOF
315	ROOF CRICKET: TPO MEMBRANE OVER 1/2" HD POLYISO COVER BOARD AND TAPERED POLYISO INSULATION BOARD (R-8.2 MINIMUM). RIDGE OF CRICKET SHALL SLOPE 1" PER FOOT MINIMUM. VALLEYS OF CRICKET SHALL BE AT A 30 DEGREE ANGLE.
316	ROOF DRAIN & OVERFLOW DRAIN PIPING
317	PREFINISHED METAL GUTTER AND DOWNSPOUT, COLOR TO MATCH ADJACENT METAL WALL PANEL - COORDINATE PRECISE LOCATION OF DOWNSPOUT WITH ARCHITECT
404	SCUPPER THROUGH FRAMED WALL

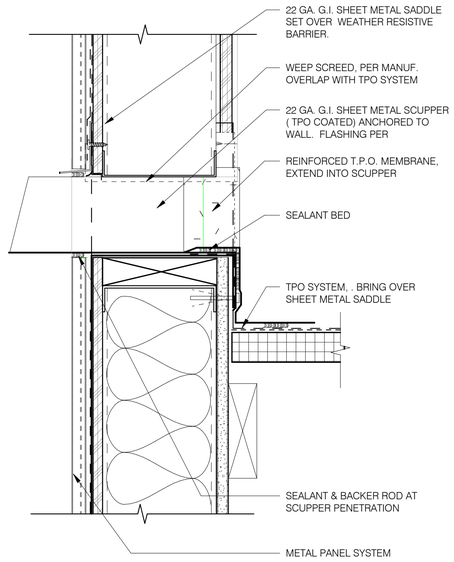

13 ROOF DRAIN AND SCUPPER DETAIL AT METAL FRAMED WALL
3" = 1'-0"

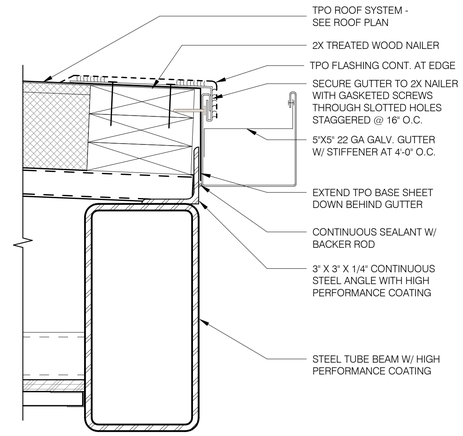

12 ROOF GUTTER
3" = 1'-0"

REGISTERED ARCHITECT
18924
Z. JAN E. LORANT
Date Signed 08/14/25
ARIZONA, U.S.A.
EXPIRES 6/30/2027

Issue Date:	10 JULY 2026	
Revisions:	# Description	Date

gabor lorant architects
3326 n. 3rd avenue suite 200
phoenix, arizona 85013
tel: 602.667.9090
fax: 602.667.9133
gaborlorant.com
gla Project No.: 24102

ARIZONA DEPARTMENT OF TRANSPORTATION
PROJECT DELIVERY AND OPERATIONS DIVISION
PROJECT MANAGEMENT GROUP

SAN SIMON PORT OF ENTRY
ROOF PLAN - ADMIN BUILDING

ROUTE I-10
MILEPOST 383
STRUCTURE NO.

F.H.W.A. Arizona Division

STATE	PROJECT NO.	FEDERAL ID NO.	SHEET NO.	TOTAL SHEETS	RECORD DRAWING
ARIZ.	010 CH 383	010-F(238)T	96	200	

LOCATION: SAN SIMON PORT OF ENTRY (POE)

TRACS NO. F0728 01C

DWG NO. **A300**
___ OF ___

9/22/2026 3:03:08 PM

DO NOT SCALE DRAWINGS. DO NOT PLOT 'SCALE TO FIT'. THIS DOCUMENT IS FORMATTED FOR THE ANSI D (22"x34") SHEET SIZE.
FULL-SIZE PLOT ON ANSI D (22"x34") PAPER ONLY. HALF-SIZE PLOT ON 11"x17" PAPER ONLY.

STAPLE ZONE

GENERAL NOTES

1. ROOF SLOPES SHALL BE A MINIMUM OF 1/4" PER FOOT, U.N.O.
2. PROVIDE ADDITIONAL CRICKETS AT EQUIPMENT AND OTHER CONDITIONS AS NECESSARY TO PROVIDE POSITIVE SLOPE TO DRAIN AT 1/2" PER FOOT MINIMUM THROUGHOUT THE ROOF, U.N.O.
3. COORDINATE ROOF PLAN WITH STRUCTURAL, MECHANICAL, PLUMBING AND ELECTRICAL DRAWINGS. BRING ANY CONFLICTS TO THE ATTENTION OF THE ARCHITECT PRIOR TO INSTALLATION.
4. VERIFY ALL EXISTING DIMENSIONS IN FIELD.

KEYNOTES - NEW WORK

~	
300	ROOFING SYSTEM: TPO MEMBRANE OVER 1/2" HD POLYISO COVER BOARD AND 1" POLYISO INSULATION BOARD ON STRUCTURAL STEEL DECKING (R-8.2 MINIMUM)
301	ROOF CRICKET: TPO MEMBRANE OVER 1/2" HD POLYISO COVER BOARD AND TAPERED POLYISO INSULATION BOARD (R-8.2 MINIMUM). CRICKET SHALL SLOPE 1" PER FOOT MINIMUM. VALLEYS OF CRICKET SHALL BE AT A 45 DEGREE ANGLE.
303	ROOF ACCESS HATCH ON CURB WITH ROOF CRICKET
304	ROOF ACCESS HATCH SAFETY RAIL SYSTEM
305	MECHANICAL EQUIPMENT ON ROOF CURB WITH ITS OWN ROOF CRICKET. ENSURE EQUIPMENT IS NOT INSTALLED ON THE VALLEY OF THE OVERALL ROOF CRICKET IT SITS ON (WHERE APPLICABLE).
307	COORDINATE PRECISE LOCATION OF SCREEN WALL COLUMNS WITH STRUCTURE BELOW
308	ROOF DRAIN AND OVERFLOW ROOF DRAIN - SEE PLUMBING DRAWINGS FOR SIZE, CALCULATIONS AND ESTIMATED GPM DISCHARGE AMOUNTS
309	MECHANICAL SCREEN WALL STEEL STRUCTURE - PROVIDE HIGH PERFORMANCE COATING ON ALL STEEL. APPLY COATING SYSTEM TO STEEL STRUCTURE PRIOR TO INSTALLING METAL WALL PANELS.
310	PRE-FINISHED METAL COPING WALL CAP

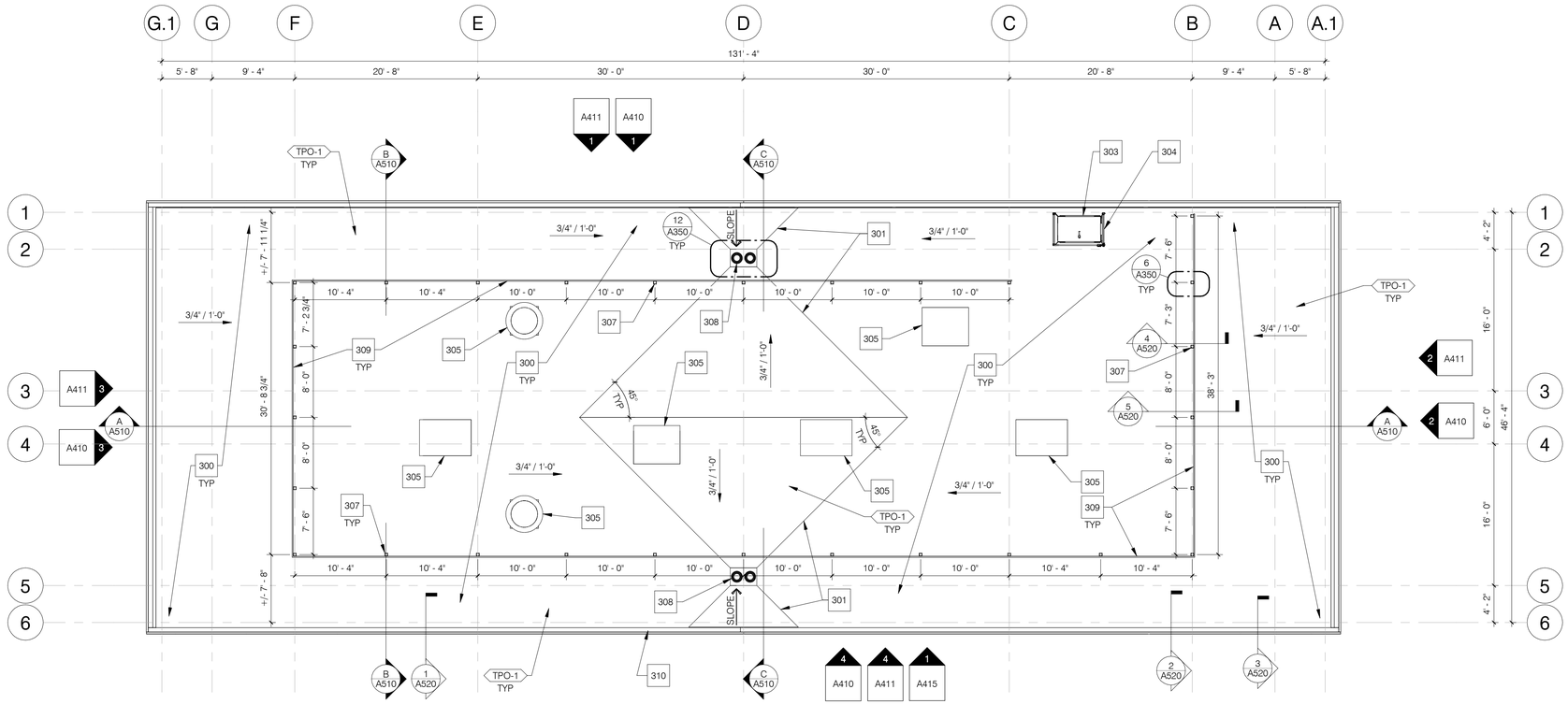

1 ROOF PLAN - INSPECTION BUILDING
1/8" = 1'-0"

PLAN NORTH NORTH

DO NOT SCALE DRAWINGS. DO NOT PLOT SCALE TO FIT: THIS DOCUMENT IS FORMATTED FOR THE ANSI D (22"x34") SHEET SIZE.
FULL-SIZE PLOT ON ANSI D (22"x34") PAPER ONLY. HALF-SIZE PLOT ON 11"x17" PAPER ONLY.

STAPLE ZONE

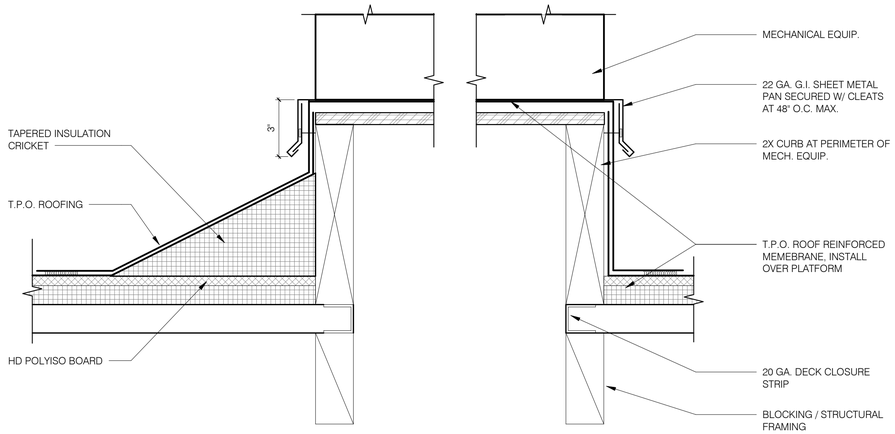

5 ROOF CURB FOR MECHANICAL EQUIPMENT
3" = 1'-0"

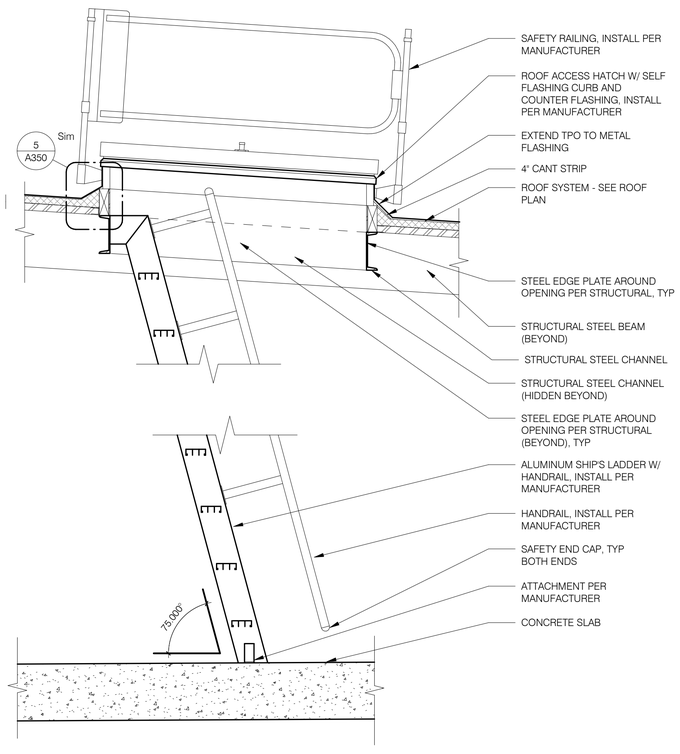

15 ROOF HATCH/SHIP LADDER
3/4" = 1'-0"

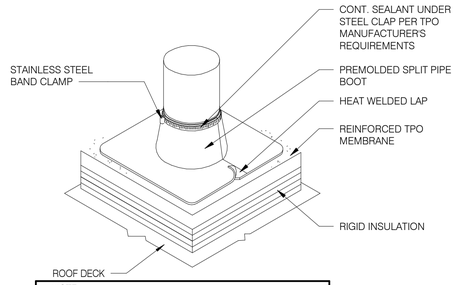

NOTE:
INSTALL PER GAF STANDARD DRAWING 524

3 PIPE PENETRATION
6" = 1'-0"

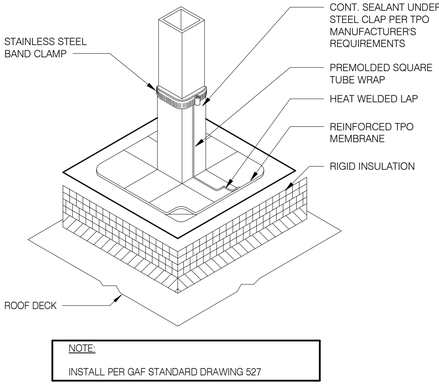

NOTE:
INSTALL PER GAF STANDARD DRAWING 527

8 SQUARE ROOF PENETRATION
6" = 1'-0"

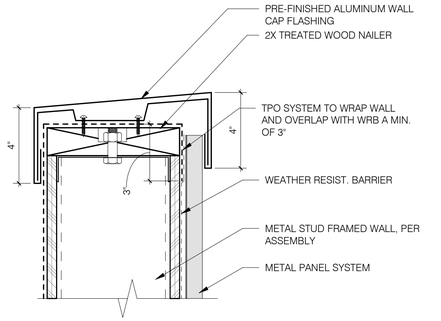

2 METAL WALL COPING
3" = 1'-0"

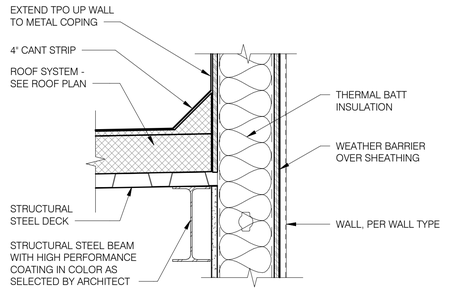

7 ROOF TO PARAPET
1 1/2" = 1'-0"

GENERAL NOTES

1. SEE FINISH & MATERIAL LEGEND.
2. COORDINATE ROOF PLAN WITH MECHANICAL, PLUMBING AND ELECTRICAL DRAWINGS. BRING ANY CONFLICTS TO THE ATTENTION OF THE ARCHITECT PRIOR TO INSTALLATION.
3. VERIFY ALL EXISTING DIMENSIONS IN FIELD.

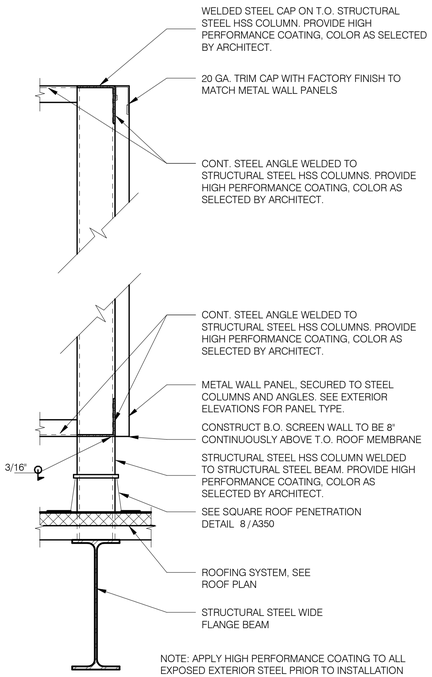

NOTE: APPLY HIGH PERFORMANCE COATING TO ALL EXPOSED EXTERIOR STEEL PRIOR TO INSTALLATION OF METAL WALL PANELS.

6 MEZZANINE SCREEN WALL AT INSPECTION BUILDING
1 1/2" = 1'-0"

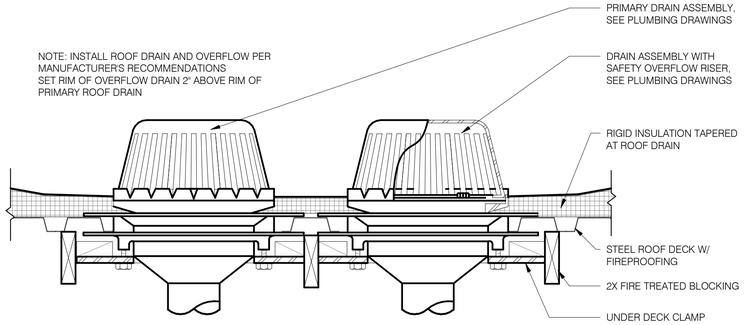

12 ROOF DRAIN AND OVERFLOW
1 1/2" = 1'-0"

REGISTERED ARCHITECT
18924
Z. JAN E. LORANT
Date Signed 08/14/26
ARIZONA, U.S.A.
EXPIRES 6/30/2027

Issue Date:	10 JULY 2026	
Revisions:	# Description	Date

gabor lorant architects
3326 n. 3rd avenue suite 200
phoenix, arizona 85013
tel: 602.667.9090
fax: 602.667.9133
gaborlorant.com
gla Project No.: 24102

ARIZONA DEPARTMENT OF TRANSPORTATION
PROJECT DELIVERY AND OPERATIONS DIVISION
PROJECT MANAGEMENT GROUP

SAN SIMON PORT OF ENTRY
ROOF DETAILS

ROUTE I-10
MILEPOST 383
STRUCTURE NO.

F.H.W.A. Arizona Division

STATE	PROJECT NO.	FEDERAL ID NO.	SHEET NO.	TOTAL SHEETS	RECORD DRAWING
ARIZ.	010 CH 383	010-F(238)T	98	200	

LOCATION: SAN SIMON PORT OF ENTRY (POE)

TRACS NO. F0728 01C

DWG NO. **A350**

___ OF ___

9/22/2026 3:03:08 PM

DO NOT SCALE DRAWINGS. DO NOT PLOT 'SCALE TO FIT'. THIS DOCUMENT IS FORMATTED FOR THE ANSI D (22"x34") SHEET SIZE.
FULL-SIZE PLOT ON ANSI D (22"x34") PAPER ONLY. HALF-SIZE PLOT ON 11"x17" PAPER ONLY.

STAPLE ZONE

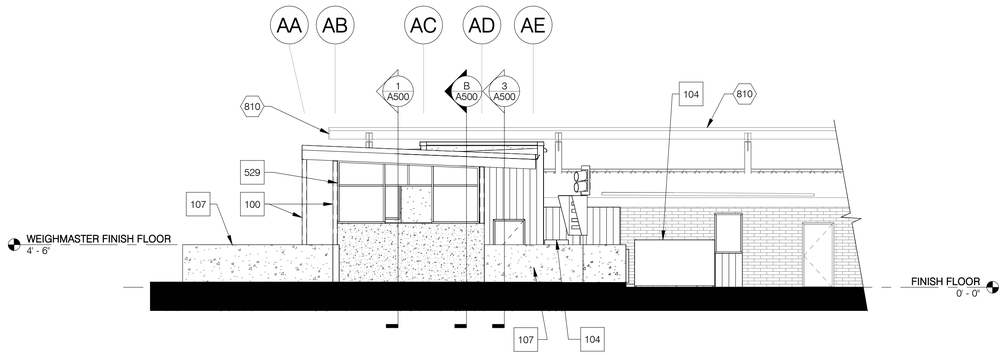

1 NORTH EXTERIOR ELEVATION - ADMIN BUILDING
1/8" = 1'-0"

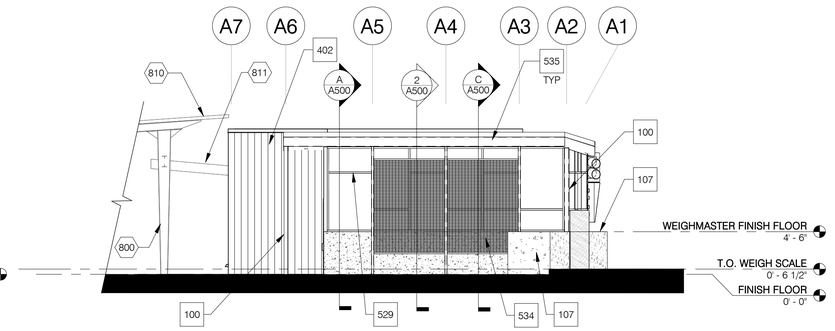

2 EAST EXTERIOR ELEVATION - ADMIN BUILDING
1/8" = 1'-0"

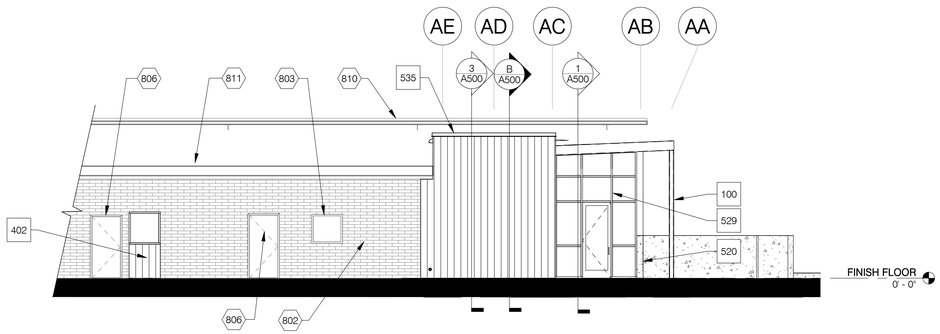

3 SOUTH EXTERIOR ELEVATION - ADMIN BUILDING
1/8" = 1'-0"

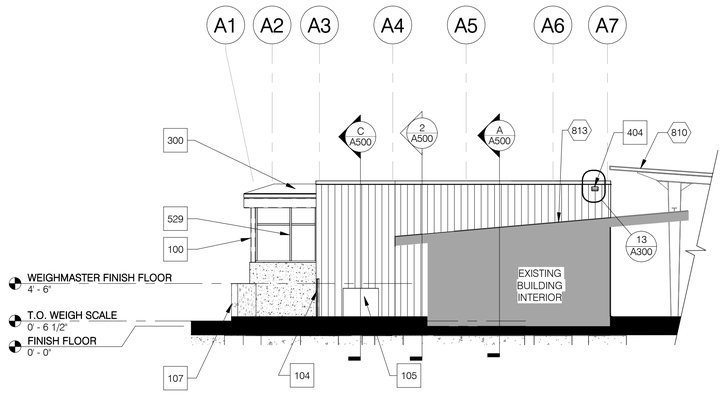

4 WEST EXTERIOR ELEVATION - ADMIN BUILDING
1/8" = 1'-0"

GENERAL NOTES

1. SEE FLOOR PLAN FOR WALL TYPES.
2. SEE FINISH & MATERIAL LEGEND.
3. VERIFY ALL EXISTING DIMENSIONS IN FIELD.

KEYNOTES - EXISTING

800	EXISTING STEEL COLUMN TO REMAIN
802	EXISTING MASONRY WALL TO REMAIN
803	EXISTING WINDOW FRAME TO REMAIN
806	EXISTING DOOR AND FRAME TO REMAIN
810	EXISTING STEEL SHADE CANOPY TO REMAIN IN ITS ENTIRETY
811	EXISTING ROOF OVERHANG TO REMAIN
813	EXISTING ROOF TO REMAIN - PATCH AS NECESSARY (TO MATCH EXISTING) DUE TO WORK

KEYNOTES - NEW WORK

100	STEEL COLUMN - WITH PAINTED FINISH IN COLOR AS SELECTED BY ARCHITECT WHERE EXPOSED TO VIEW
104	METAL EQUIPMENT SCREEN ENCLOSURE
105	MECHANICAL UNIT/EQUIPMENT
107	CAST-IN-PLACE ARCHITECTURAL CONCRETE BARRIER WALL
300	ROOFING SYSTEM: TPO MEMBRANE OVER 1/2" HD POLYISO COVER BOARD AND 1" POLYISO INSULATION BOARD ON STRUCTURAL STEEL DECKING (R-8.2 MINIMUM)
402	PREFINISHED METAL WALL PANEL
404	SCUPPER THROUGH FRAMED WALL
520	CAST-IN-PLACE CONCRETE STEM WALL
529	ALUMINUM STOREFRONT SYSTEM
534	DECORATIVE METAL SHADING SCREEN
535	PREFINISHED METAL COPING

18924
Z. JAN E. LORANT
Registered Architect
Date Signed 07/10/26
ARIZONA, U.S.A.
EXPIRES 6/30/2027

Issue Date:	10 JULY 2026	
Revisions:	# Description	Date

gabor lorant architects
3326 n. 3rd avenue suite 200
phoenix, arizona 85013
tel: 602.667.9090
fax: 602.667.9133
gaborlorant.com
gla Project No.: 24102

ARIZONA DEPARTMENT OF TRANSPORTATION
PROJECT DELIVERY AND OPERATIONS DIVISION
PROJECT MANAGEMENT GROUP

SAN SIMON PORT OF ENTRY
EXTERIOR BUILDING ELEVATIONS - ADMIN BUILDING

ROUTE	I-10
MILEPOST	383
STRUCTURE NO.	

F.H.W.A. Arizona Division	STATE	PROJECT NO.	FEDERAL ID NO.	SHEET NO.	TOTAL SHEETS	RECORD DRAWING
	ARIZ.	010 CH 383	010-F(238)T	99	200	

LOCATION: SAN SIMON PORT OF ENTRY (POE)

TRACS NO. F0728 01C

DWG NO. **A400**

___ OF ___

9/22/2026 3:03:09 PM

DO NOT SCALE DRAWINGS. DO NOT PLOT SCALE TO FIT. THIS DOCUMENT IS FORMATTED FOR THE ANSI D (22"x34") SHEET SIZE.
FULL-SIZE PLOT ON ANSI D (22"x34") PAPER ONLY. HALF-SIZE PLOT ON 11"x17" PAPER ONLY.

STAPLE ZONE

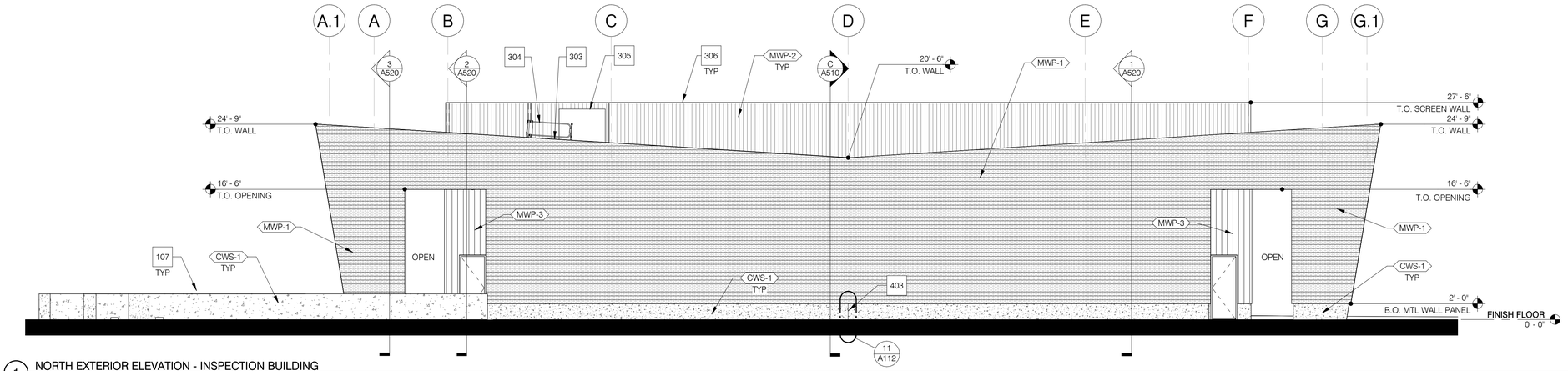

1 NORTH EXTERIOR ELEVATION - INSPECTION BUILDING
1/8" = 1'-0"

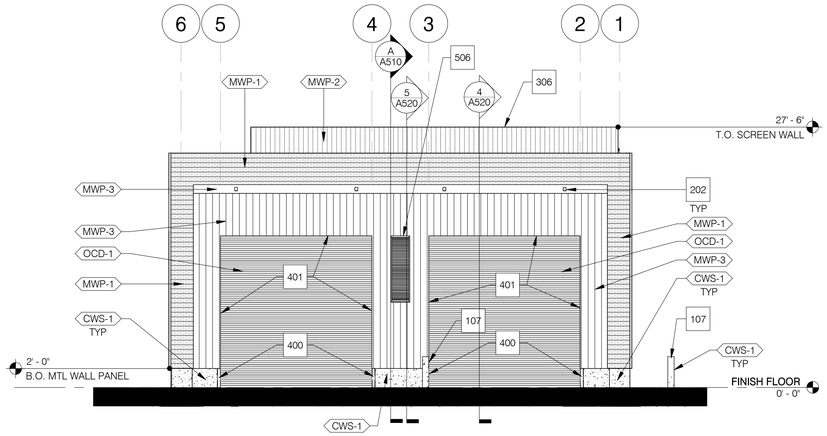

2 EAST EXTERIOR ELEVATION - INSPECTION BUILDING
1/8" = 1'-0"

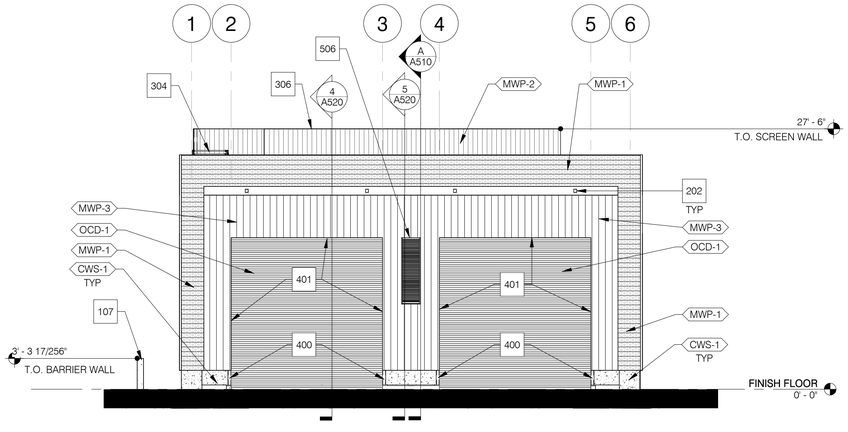

3 WEST EXTERIOR ELEVATION - INSPECTION BUILDING
1/8" = 1'-0"

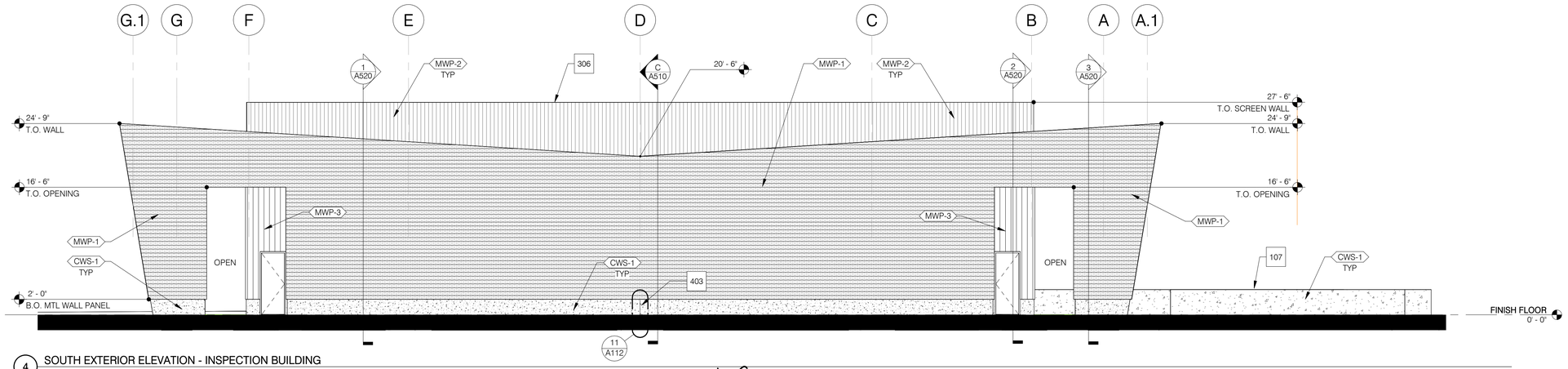

4 SOUTH EXTERIOR ELEVATION - INSPECTION BUILDING
1/8" = 1'-0"

GENERAL NOTES

1. SEE FLOOR PLAN FOR WALL TYPES.
2. SEE FINISH & MATERIAL LEGEND.
3. VERIFY ALL EXISTING DIMENSIONS IN FIELD.

KEYNOTES - NEW WORK

107	CAST-IN-PLACE ARCHITECTURAL CONCRETE BARRIER WALL
202	RECESSED LINEAR LIGHT FIXTURE - FACTORY FINISH IN COLOR AS SELECTED BY ARCHITECT
303	ROOF ACCESS HATCH ON CURB WITH ROOF CRICKET
304	ROOF ACCESS HATCH SAFETY RAIL SYSTEM
305	MECHANICAL EQUIPMENT ON ROOF CURB WITH ITS OWN ROOF CRICKET. ENSURE EQUIPMENT IS NOT INSTALLED ON THE VALLEY OF THE OVERALL ROOF CRICKET IT SITS ON (WHERE APPLICABLE).
306	MECHANICAL EQUIPMENT SCREEN WALL
400	EXPOSED STRUCTURAL STEEL TUBE COLUMN - PROVIDE HIGH PERFORMANCE COATING
401	STEEL PLATE PERIMETER FRAME AROUND OVERHEAD COILING DOOR OPENING - PROVIDE HIGH PERFORMANCE COATING
403	VERTICAL CONSTRUCTION JOINT
506	MECHANICAL EXHAUST GRILLE

REGISTERED ARCHITECT — 18924 — Z. JAN E. LORANT — Date Signed 07/10/26 — ARIZONA, U.S.A. — EXPIRES 6/30/2027

Issue Date:	10 JULY 2026	
Revisions:	# Description	Date

gabor lorant architects
3326 n. 3rd avenue suite 200
phoenix, arizona 85013
tel: 602.667.9090
fax: 602.667.9133
gaborlorant.com
gla Project No.: 24102

ARIZONA DEPARTMENT OF TRANSPORTATION
PROJECT DELIVERY AND OPERATIONS DIVISION
PROJECT MANAGEMENT GROUP

SAN SIMON PORT OF ENTRY
EXTERIOR BUILDING ELEVATIONS - INSPECTION BUILDING

ROUTE I-10
MILEPOST 383
STRUCTURE NO.

F.H.W.A. Arizona Division

STATE	PROJECT NO.	FEDERAL ID NO.	SHEET NO.	TOTAL SHEETS	RECORD DRAWING
ARIZ.	010 CH 383	010-F(238)T	100	200	

LOCATION: SAN SIMON PORT OF ENTRY (POE)

TRACS NO. F0728 01C

DWG NO. **A410**
___ OF ___

9/22/2026 3:03:11 PM

DO NOT SCALE DRAWINGS. DO NOT PLOT 'SCALE TO FIT'. THIS DOCUMENT IS FORMATTED FOR THE ANSI D (22"x34") SHEET SIZE.
FULL-SIZE PLOT ON ANSI D (22"x34") PAPER ONLY. HALF-SIZE PLOT ON 11"x17" PAPER ONLY.

STAPLE ZONE

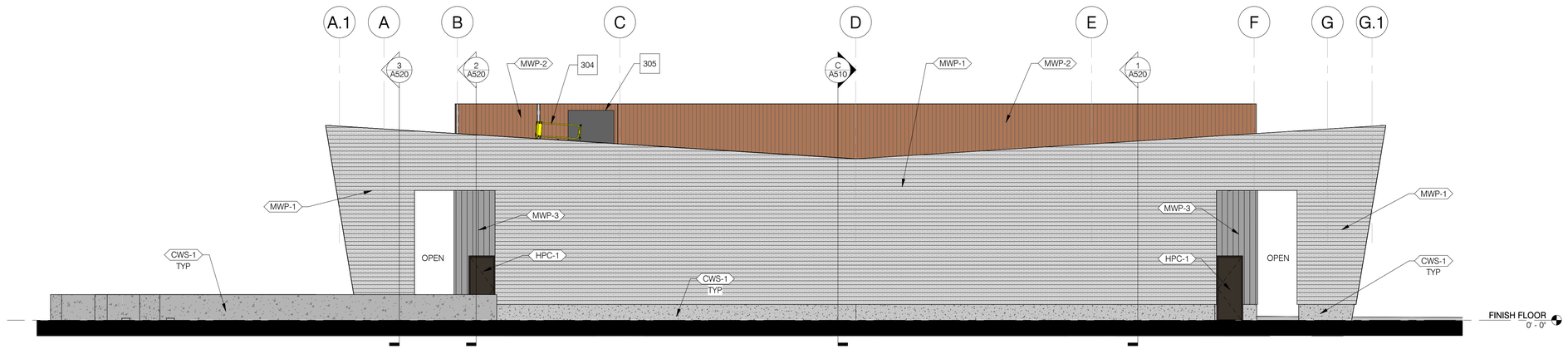

1 NORTH EXTERIOR ELEVATION - INSPECTION BUILDING - COLOR
1/8" = 1'-0"

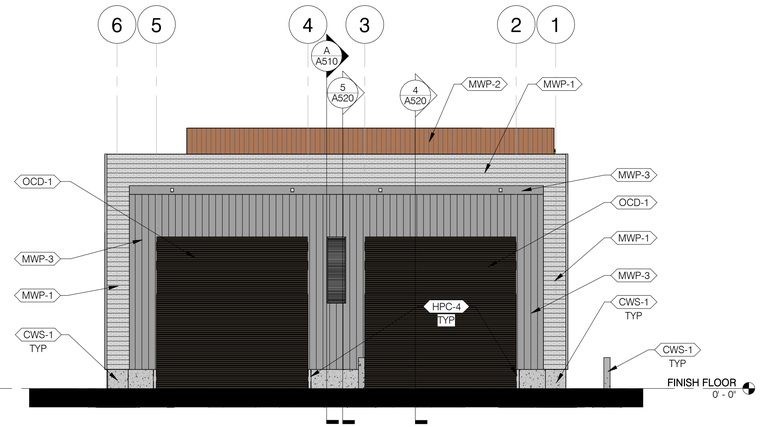

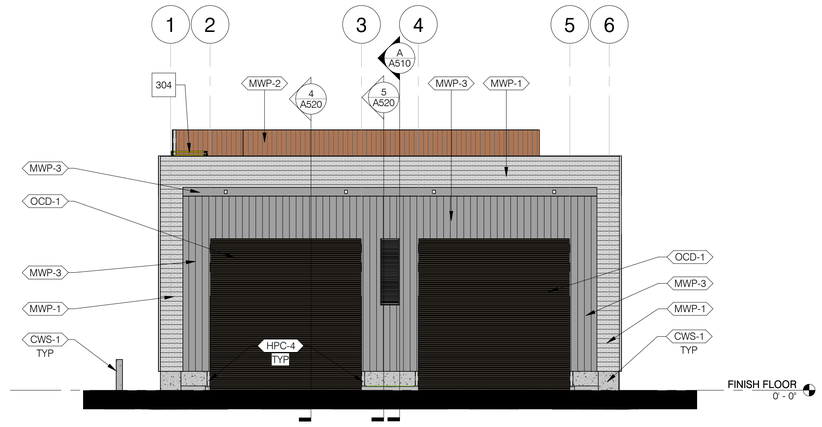

2 EAST EXTERIOR ELEVATION - INSPECTION BUILDING - COLOR
1/8" = 1'-0"

3 WEST EXTERIOR ELEVATION - INSPECTION BUILDING - COLOR
1/8" = 1'-0"

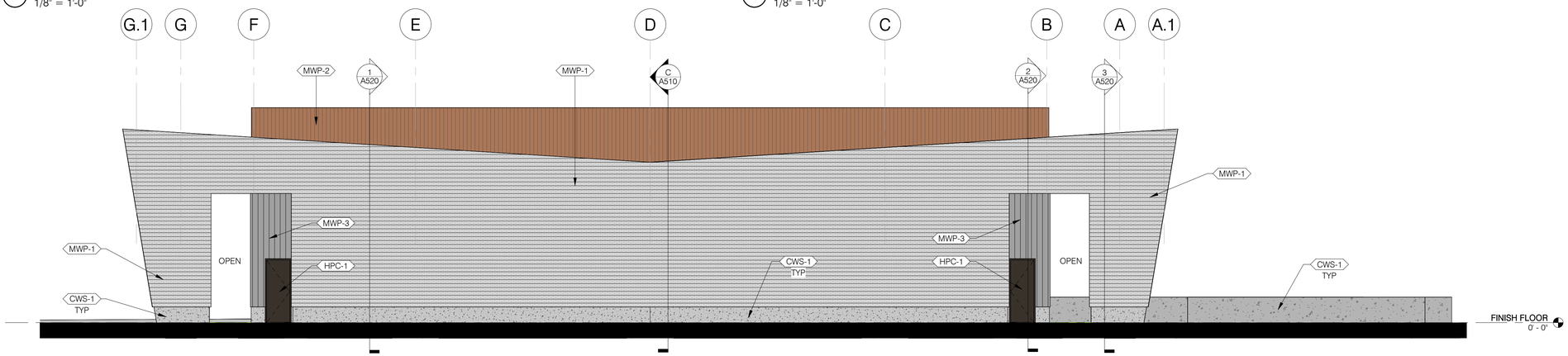

4 SOUTH EXTERIOR ELEVATION - INSPECTION BUILDING - COLOR
1/8" = 1'-0"

GENERAL NOTES

1. SEE FLOOR PLAN FOR WALL TYPES.
2. SEE FINISH & MATERIAL LEGEND.
3. VERIFY ALL EXISTING DIMENSIONS IN FIELD.

KEYNOTES - NEW WORK

304	ROOF ACCESS HATCH SAFETY RAIL SYSTEM
305	MECHANICAL EQUIPMENT ON ROOF CURB WITH ITS OWN ROOF CRICKET. ENSURE EQUIPMENT IS NOT INSTALLED ON THE VALLEY OF THE OVERALL ROOF CRICKET IT SITS ON (WHERE APPLICABLE).

18924
Z. JAN E.
LORANT
Date Signed 07/10/26
ARIZONA, U.S.A.
EXPIRES 6/30/2027

gabor lorant architects
3326 n. 3rd avenue suite 200
phoenix, arizona 85013
tel: 602.667.9090
fax: 602.667.9133
gaborlorant.com

Issue Date:	10 JULY 2026	
Revisions:	# Description	Date

gla Project No.: 24102

ARIZONA DEPARTMENT OF TRANSPORTATION
PROJECT DELIVERY AND OPERATIONS DIVISION
PROJECT MANAGEMENT GROUP

SAN SIMON PORT OF ENTRY
COLOR EXTERIOR BUILDING ELEVATIONS - INSPECTION BUILDING

ROUTE I-10
MILEPOST 383
STRUCTURE NO.

F.H.W.A. Arizona Division

STATE	PROJECT NO.	FEDERAL ID NO.	SHEET NO.	TOTAL SHEETS	RECORD DRAWING
ARIZ.	010 CH 383	010-F(238)T	101	200	

LOCATION: SAN SIMON PORT OF ENTRY (POE)

TRACS NO. F0728 01C

DWG NO. **A411**

___ OF ___

9/22/2026 3:03:13 PM

DO NOT SCALE DRAWINGS. DO NOT PLOT 'SCALE TO FIT'. THIS DOCUMENT IS FORMATTED FOR THE ANSI D (22"x34") SHEET SIZE.
FULL-SIZE PLOT ON ANSI D (22"x34") PAPER ONLY. HALF-SIZE PLOT ON 11"x17" PAPER ONLY.

STAPLE ZONE

9/22/2026 3:03:13 PM

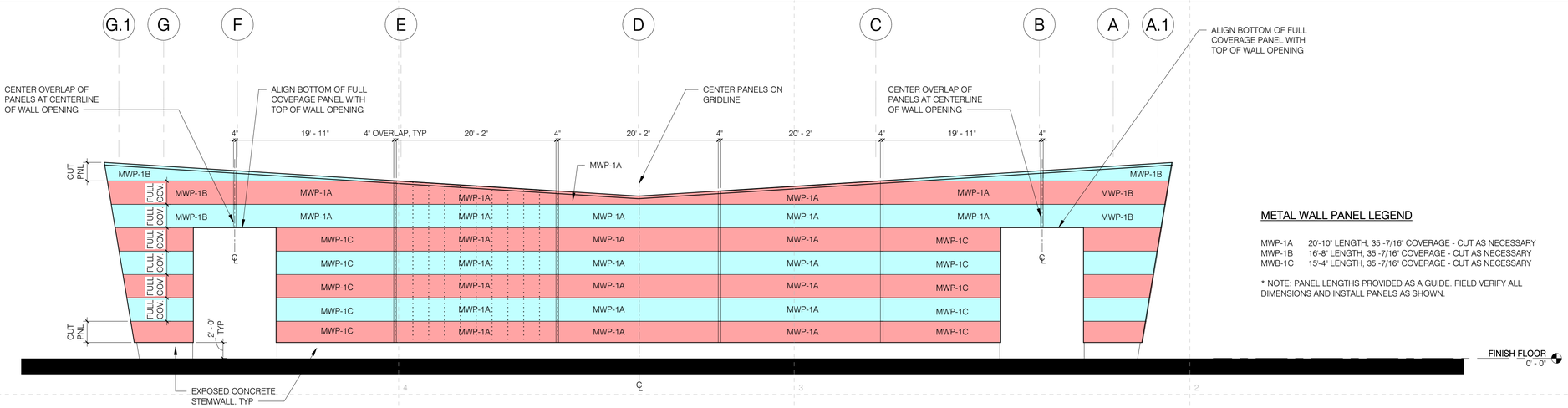

1 EXTERIOR METAL WALL PANEL LAYOUT - INSPECTION BUILDING - NORTH & SOUTH SIDES
1/8" = 1'-0"

NOTE: SOUTH ELEVATION OF BUILDING SHOWN.

METAL WALL PANEL LEGEND

MWP-1A	20'-10" LENGTH, 35 -7/16" COVERAGE - CUT AS NECESSARY
MWP-1B	16'-8" LENGTH, 35 -7/16" COVERAGE - CUT AS NECESSARY
MWB-1C	15'-4" LENGTH, 35 -7/16" COVERAGE - CUT AS NECESSARY

* NOTE: PANEL LENGTHS PROVIDED AS A GUIDE. FIELD VERIFY ALL DIMENSIONS AND INSTALL PANELS AS SHOWN.

GENERAL NOTES

1. SEE FLOOR PLAN FOR WALL TYPES.
2. SEE FINISH & MATERIAL LEGEND.
3. VERIFY ALL EXISTING DIMENSIONS IN FIELD.

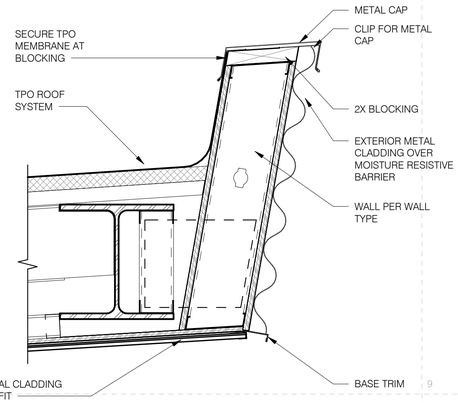

2 SOFFIT DETAIL
1 1/2" = 1'-0"

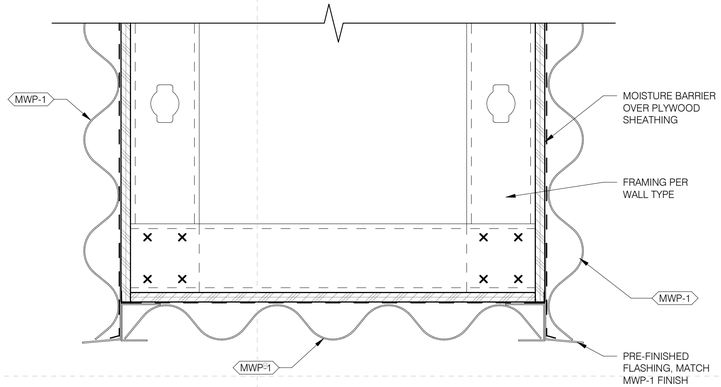

4 SOFFIT DETAIL FOR DOUBLE STUD WALL
3" = 1'-0"

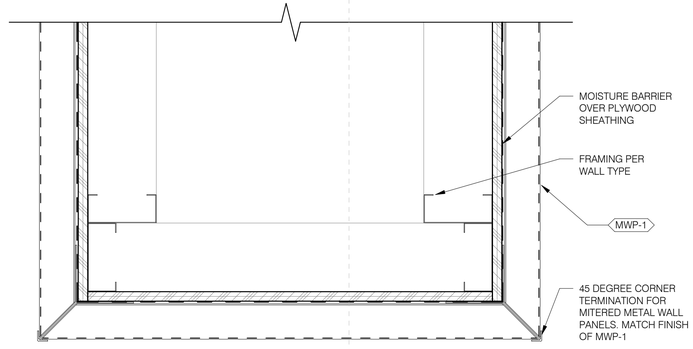

5 PLAN DETAIL FOR DOUBLE STUD WALL
3" = 1'-0"

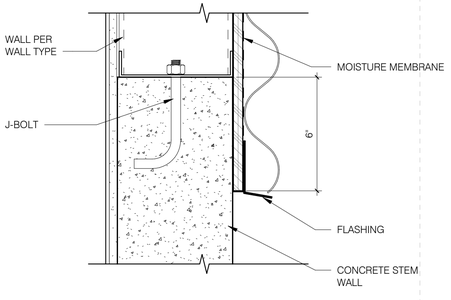

3 METAL PANEL TO CONC. STEM WALL
3" = 1'-0"

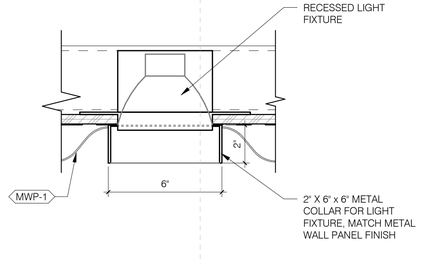

6 RECESSED LIGHT COLLAR
3" = 1'-0"

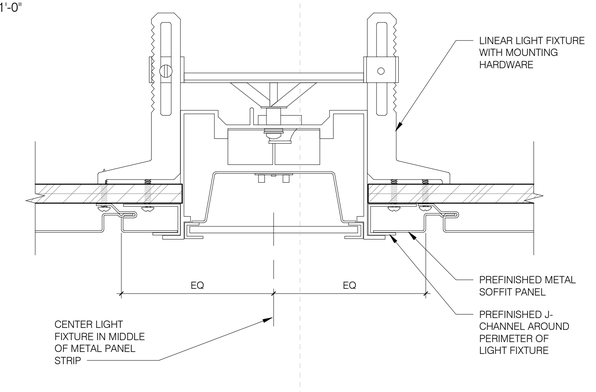

7 LINEAR LIGHT FIXTURE AT SOFFIT
6" = 1'-0"

18924
Z. JAN E. LORANT
Date Signed 09/14/26
ARIZONA U.S.A.
EXPIRES 6/30/2027

gabor lorant architects
3326 n. 3rd avenue suite 200
phoenix, arizona 85013
tel: 602.667.9090
fax: 602.667.9133
gaborlorant.com
gla Project No.: 24102

Issue Date:	10 JULY 2026	
Revisions:	# Description	Date

ARIZONA DEPARTMENT OF TRANSPORTATION
PROJECT DELIVERY AND OPERATIONS DIVISION
PROJECT MANAGEMENT GROUP

SAN SIMON PORT OF ENTRY
EXTERIOR METAL WALL PANEL DETAILS - INSPECTION BUILDING

ROUTE I-10
MILEPOST 383
STRUCTURE NO.

F.H.W.A. Arizona Division	STATE	PROJECT NO.	FEDERAL ID NO.	SHEET NO.	TOTAL SHEETS	RECORD DRAWING
	ARIZ.	010 CH 383	010-F(238)T	102	200	

LOCATION: SAN SIMON PORT OF ENTRY (POE)

TRACS NO. F0728 01C

DWG NO. **A415**

___ OF ___

DO NOT SCALE DRAWINGS. DO NOT PLOT 'SCALE TO FIT'. THIS DOCUMENT IS FORMATTED FOR THE ANSI D (22"x34") SHEET SIZE.
FULL-SIZE PLOT ON ANSI D (22"x34") PAPER ONLY. HALF-SIZE PLOT ON 11"x17" PAPER ONLY.

STAPLE ZONE

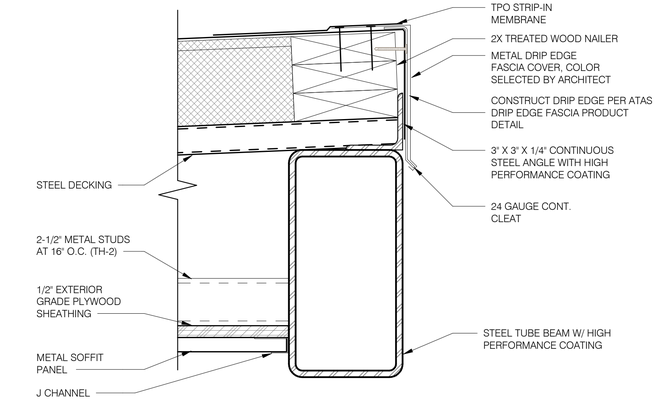

2 ROOF EDGE/SOFFIT DETAIL - ADMIN BLDG
3" = 1'-0"

REGISTERED ARCHITECT
18924
Z. JAN E. LORANT
Date Signed 07/10/26
ARIZONA U.S.A.
EXPIRES 6/30/2027

Issue Date:	10 JULY 2026		
Revisions:	#	Description	Date

gabor lorant architects
3326 n. 3rd avenue suite 200
phoenix, arizona 85013
tel: 602.667.9090
fax: 602.667.9133
gaborlorant.com

gla Project No.: 24102

ARIZONA DEPARTMENT OF TRANSPORTATION
PROJECT DELIVERY AND OPERATIONS DIVISION
PROJECT MANAGEMENT GROUP

SAN SIMON PORT OF ENTRY
BUILDING ENVELOPE DETAILS

ROUTE	MILEPOST	STRUCTURE NO.
I-10	383	

F.H.W.A. Arizona Division	STATE	PROJECT NO.	FEDERAL ID NO.	SHEET NO.	TOTAL SHEETS	RECORD DRAWING
	ARIZ.	010 CH 383	010-F(238)T	103	200	

LOCATION: SAN SIMON PORT OF ENTRY (POE)

TRACS NO. F0728 01C

DWG NO. **A450**

___ OF ___

9/22/2026 3:03:14 PM

DO NOT SCALE DRAWINGS. DO NOT PLOT SCALE TO FIT. THIS DOCUMENT IS FORMATTED FOR THE ANSI D (22"x34") SHEET SIZE.
FULL-SIZE PLOT ON ANSI D (22"x34") PAPER ONLY. HALF-SIZE PLOT ON 11"x17" PAPER ONLY.

STAPLE ZONE

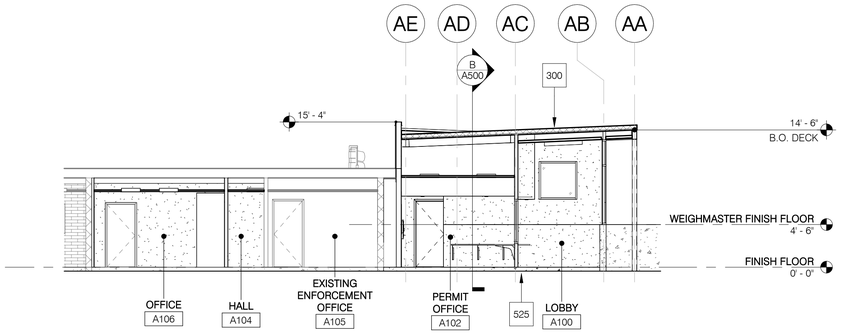

A BUILDING SECTION - ADMIN BUILDING
1/8" = 1'-0"

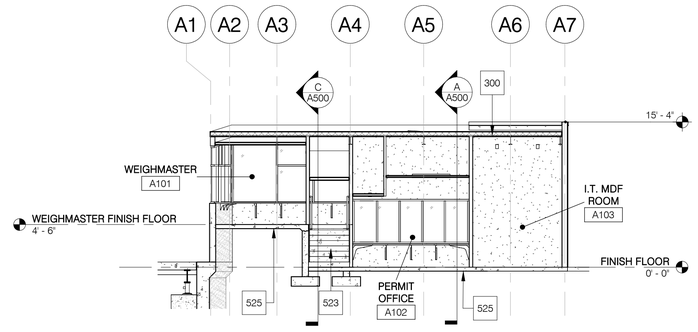

B BUILDING SECTION - ADMIN BUILDING
1/8" = 1'-0"

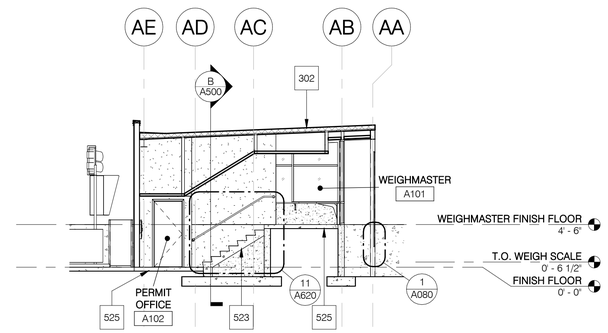

C BUILDING SECTION - ADMIN BUILDING
1/8" = 1'-0"

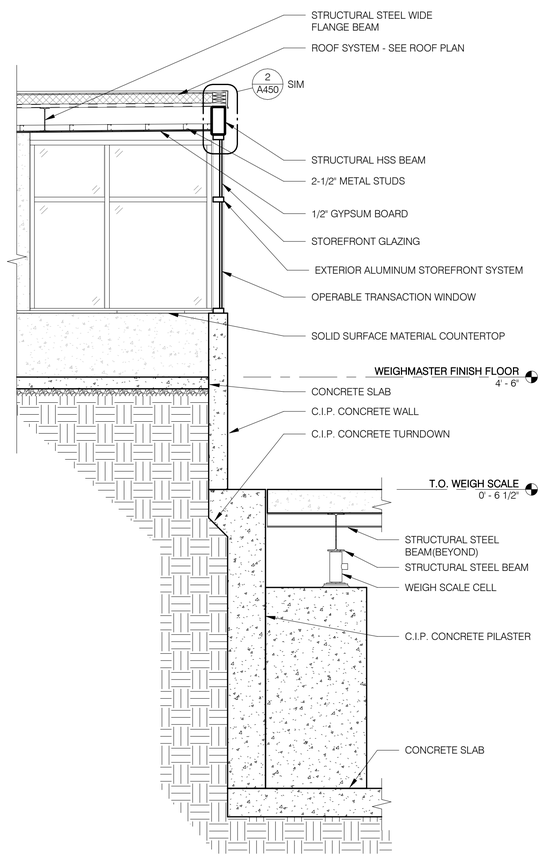

4 WALL SECTION AT WEIGHMASTER & WEIGH SCALE
3/8" = 1'-0"

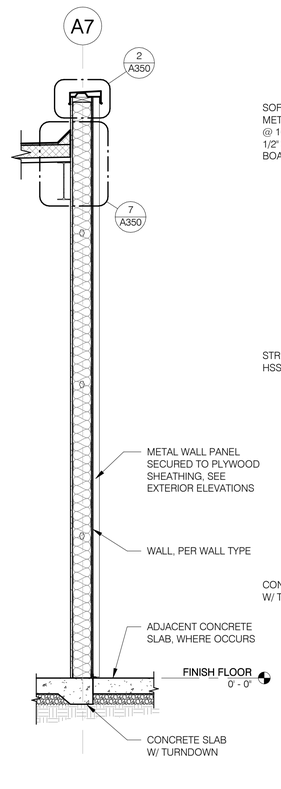

3 WALL SECTION AT EXTR METAL STUD WALL
1/2" = 1'-0"

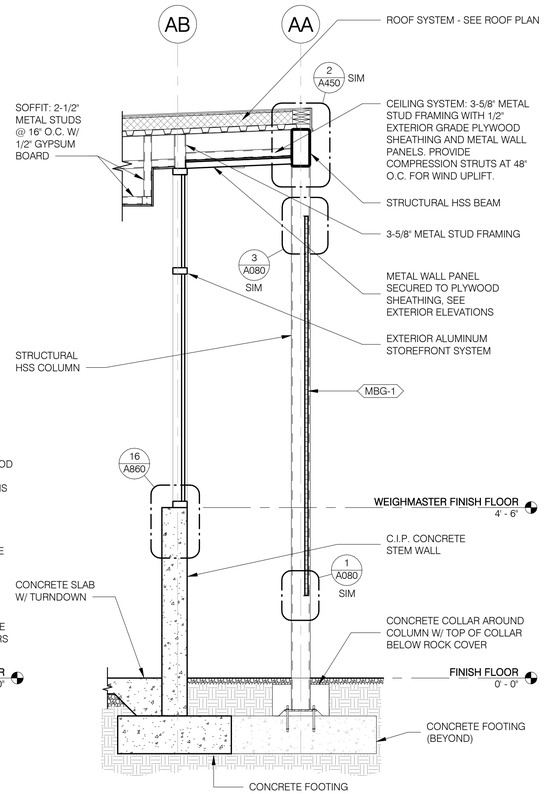

2 WALL SECTION AT SHADING SCREEN
1/2" = 1'-0"

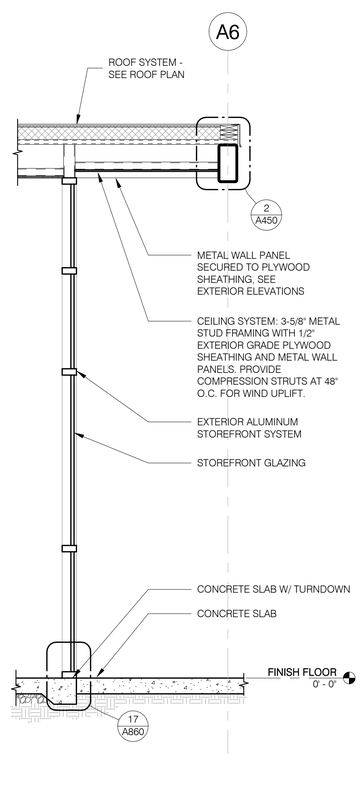

1 WALL SECTION AT STOREFREONT ENTRANCE
1/2" = 1'-0"

GENERAL NOTES

1. SEE SHEET A180 FOR WALL TYPES AND A190 FOR WALL FRAMING DETAILS.
2. ALL AREAS WITH BATT INSULATION, INCLUDING AREAS ACCESSED FOR MAINTENANCE ABOVE CEILINGS, OTHER THAN AT INACCESSIBLE AREAS WITH HARD LID CEILINGS, SHALL BE COVERED WITH AN INSULATION COVER - SEE THERMAL INSULATION SPECIFICATION.
3. VERIFY ALL EXISTING DIMENSIONS IN FIELD.

KEYNOTES - NEW WORK

~	
300	ROOFING SYSTEM: TPO MEMBRANE OVER 1/2" HD POLYISO COVER BOARD AND 1" POLYISO INSULATION BOARD ON STRUCTURAL STEEL DECKING (R-8.2 MINIMUM)
302	ROOFING SYSTEM: TPO MEMBRANE OVER 1/2" HD POLYISO COVER BOARD AND 4" POLYISO INSULATION BOARD ON STRUCTURAL STEEL DECKING (R-25 MINIMUM)
523	CONCRETE STAIR
525	CONCRETE SLAB

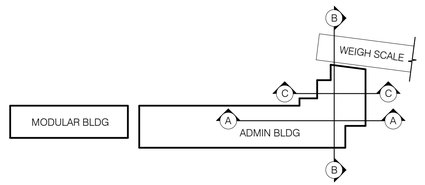

KEY PLAN - ADMIN BLDG SECTIONS

N

9/22/2026 3:03:14 PM

Issue Date:	10 JULY 2026								
Revisions:	#	Description	Date						

gabor lorant architects
3326 n. 3rd avenue suite 200
phoenix, arizona 85013
tel: 602.667.9090
fax: 602.667.9133
gaborlorant.com
gla Project No.: 24102

REGISTERED ARCHITECT 18924 Z. JAN E. LORANT Date Signed 07/10/26 ARIZONA U.S.A. EXPIRES 6/30/2027

ARIZONA DEPARTMENT OF TRANSPORTATION
PROJECT DELIVERY AND OPERATIONS DIVISION
PROJECT MANAGEMENT GROUP

SAN SIMON PORT OF ENTRY
BUILDING & WALL SECTIONS - ADMIN BUILDING

ROUTE I-10
MILEPOST 383
STRUCTURE NO.

F.H.W.A. Arizona Division

STATE	PROJECT NO.	FEDERAL ID NO.	SHEET NO.	TOTAL SHEETS	RECORD DRAWING
ARIZ.	010 CH 383	010-F(238)T	104	200	

LOCATION: SAN SIMON PORT OF ENTRY (POE)

TRACS NO. F0728 01C

DWG NO. **A500**

___ OF ___

DO NOT SCALE DRAWINGS. DO NOT PLOT 'SCALE TO FIT'. THIS DOCUMENT IS FORMATTED FOR THE ANSI D (22"x34") SHEET SIZE.
FULL-SIZE PLOT ON ANSI D (22"x34") PAPER ONLY. HALF-SIZE PLOT ON 11"x17" PAPER ONLY.

STAPLE ZONE

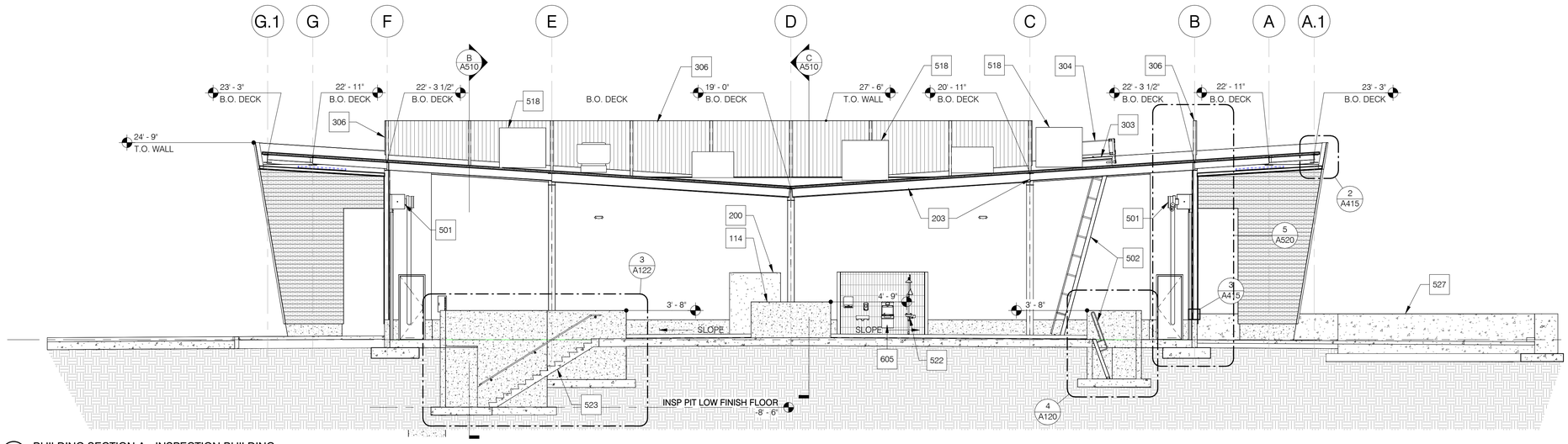

A BUILDING SECTION A - INSPECTION BUILDING
1/8" = 1'-0"

GENERAL NOTES

1. SEE SHEET A180 FOR WALL TYPES AND A190 FOR WALL FRAMING DETAILS.
2. ALL AREAS WITH BATT INSULATION, INCLUDING AREAS ACCESSED FOR MAINTENANCE ABOVE CEILINGS, OTHER THAN AT INACCESSIBLE AREAS WITH HARD LID CEILINGS, SHALL BE COVERED WITH AN INSULATION COVER - SEE THERMAL INSULATION SPECIFICATION.
3. VERIFY ALL EXISTING DIMENSIONS IN FIELD.

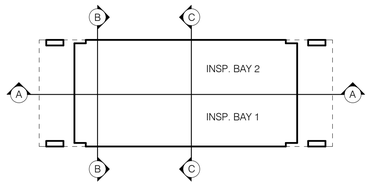

KEY PLAN - INSPECTION BLDG SECTIONS

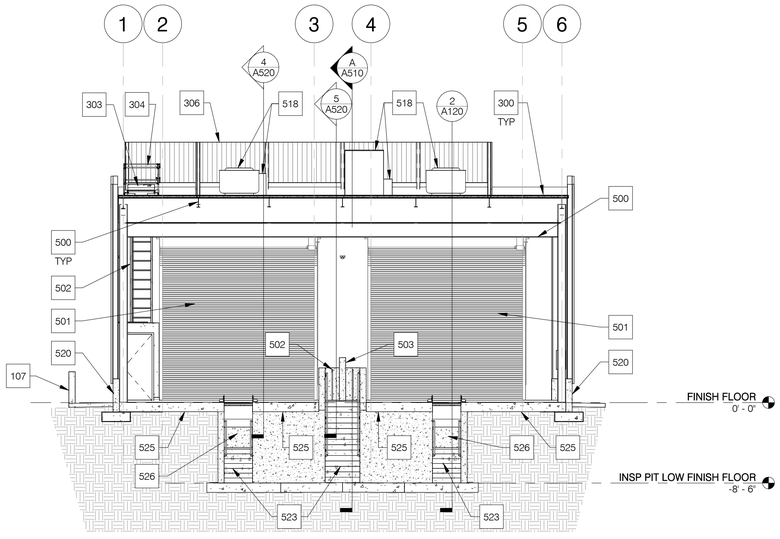

B BUILDING SECTION B - INSPECTION BUILDING
1/8" = 1'-0"

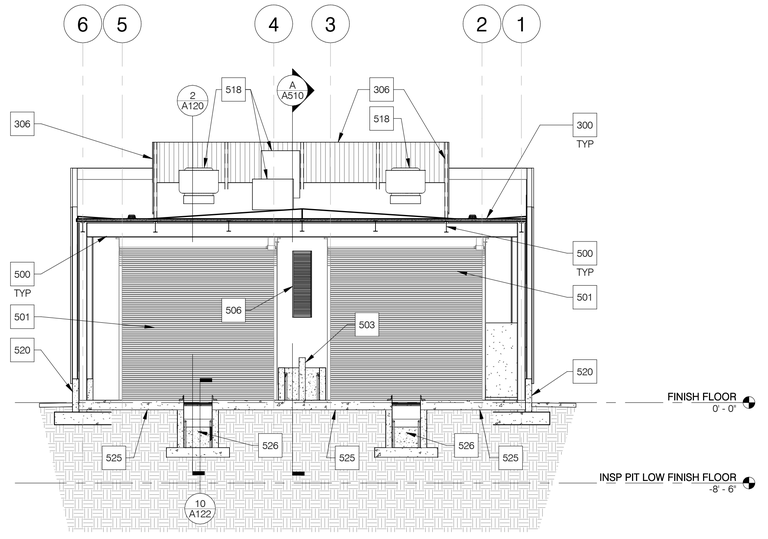

C BUILDING SECTION C - INSPECTION BUILDING
1/8" = 1'-0"

KEYNOTES - NEW WORK

107	CAST-IN-PLACE ARCHITECTURAL CONCRETE BARRIER WALL
114	CAST-IN-PLACE CONCRETE WALL - T.O. WALL 4'-6" ABOVE RIDGE OF FLOOR SLAB
200	PROVIDE FINISHED GYPSUM BOARD CEILING CAP WITH PAINTED FINISH ON BOTH SIDES OF THE TOP OF THIS ROOM
203	STRUCTURAL STEEL - WITH PAINTED FINISH IN COLOR AS SELECTED BY ARCHITECT WHERE EXPOSED TO VIEW
300	ROOFING SYSTEM: TPO MEMBRANE OVER 1/2" HD POLYISO COVER BOARD AND 1" POLYISO INSULATION BOARD ON STRUCTURAL STEEL DECKING (R-8.2 MINIMUM)
303	ROOF ACCESS HATCH ON CURB WITH ROOF CRICKET
304	ROOF ACCESS HATCH SAFETY RAIL SYSTEM
306	MECHANICAL EQUIPMENT SCREEN WALL
500	STRUCTURAL STEEL BEAM
501	OVERHEAD COILING DOOR
502	ALUMINUM SHIP LADDER
503	CAST-IN-PLACE CONCRETE WALL
506	MECHANICAL EXHAUST GRILLE
518	MECHANICAL UNIT/EQUIPMENT ON ROOF CURB
520	CAST-IN-PLACE CONCRETE STEM WALL
522	EYEWASH STATION
523	CONCRETE STAIR
525	CONCRETE SLAB
526	INSPECTION PIT
527	CAST-IN-PLACE CONCRETE BARRIER WALL
605	DRINKING FOUNTAIN WITH BOTTLE FILLER MOUNTED



Issue Date:	10 JULY 2026		
Revisions:	Δ	Description	Date

gabor lorant architects
3326 n. 3rd avenue suite 200
phoenix, arizona 85013
tel: 602.667.9090
fax: 602.667.9133
gaborlorant.com
gla Project No.: 24102

ARIZONA DEPARTMENT OF TRANSPORTATION
PROJECT DELIVERY AND OPERATIONS DIVISION
PROJECT MANAGEMENT GROUP

SAN SIMON PORT OF ENTRY
BUILDING SECTIONS - INSPECTION BUILDING

ROUTE	MILEPOST	STRUCTURE NO.
I-10	383	

F.H.W.A. Arizona Division	STATE	PROJECT NO.	FEDERAL ID NO.	SHEET NO.	TOTAL SHEETS	RECORD DRAWING
	ARIZ.	010 CH 383	010-F(238)T	105	200	

LOCATION: SAN SIMON PORT OF ENTRY (POE)

TRACS NO. F0728 01C

DWG NO. **A510**

___ OF ___

9/22/2026 3:03:15 PM

DO NOT SCALE DRAWINGS. DO NOT PLOT 'SCALE TO FIT'. THIS DOCUMENT IS FORMATTED FOR THE ANSI D (22"x34") SHEET SIZE.
FULL-SIZE PLOT ON ANSI D (22"x34") PAPER ONLY. HALF-SIZE PLOT ON 11"x17" PAPER ONLY.

STAPLE ZONE

GENERAL NOTES

1. SEE SHEET A180 FOR WALL TYPES AND A190 FOR WALL FRAMING DETAILS.
2. VERIFY ALL EXISTING DIMENSIONS IN FIELD.

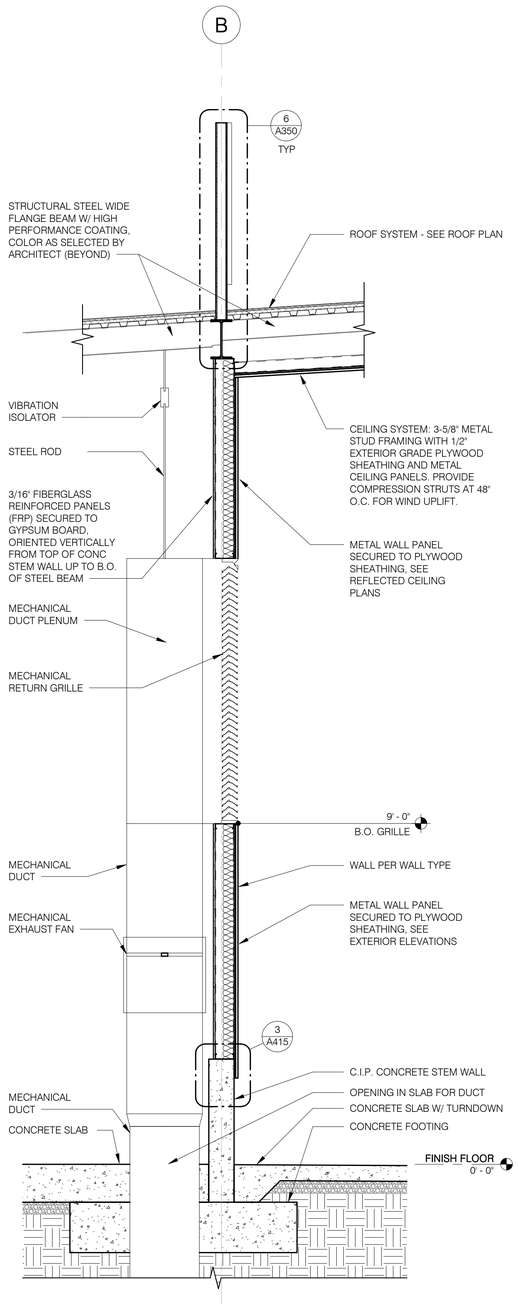

5 WALL SECTION - EXTERIOR EXHAUST GRILLE
1/2" = 1'-0"

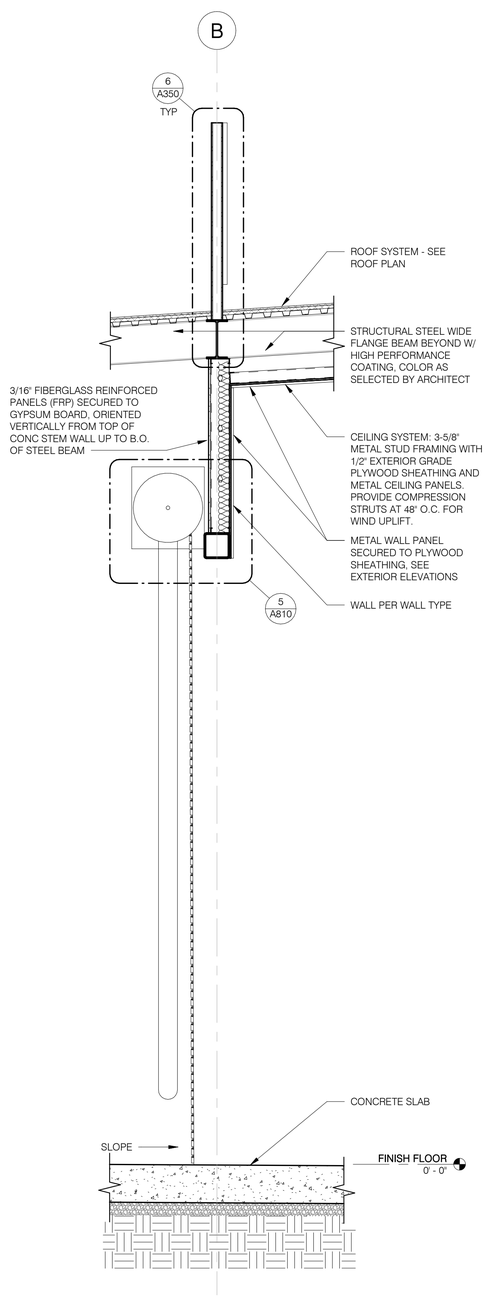

4 WALL SECTION - OVERHEAD COILING DOOR
1/2" = 1'-0"

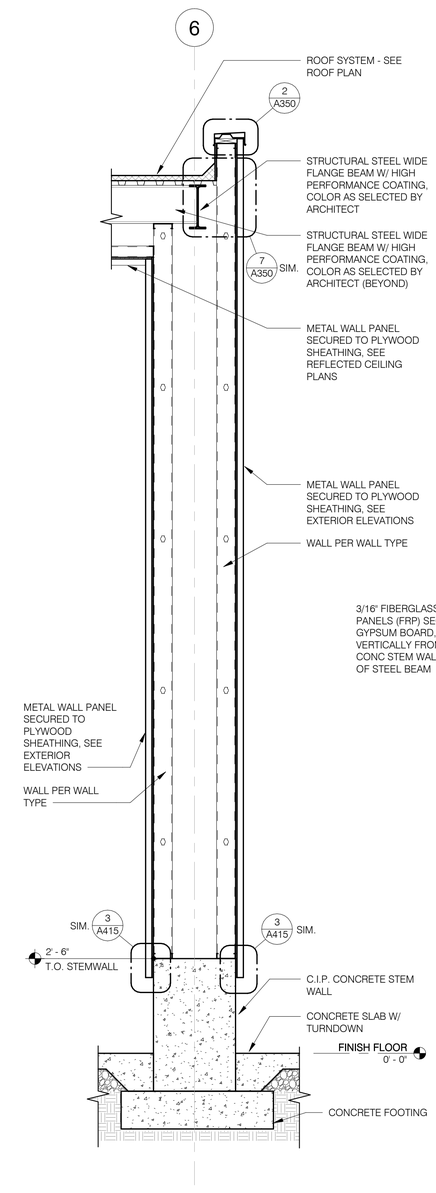

3 WALL SECTION - DOUBLE STUD WALL
1/2" = 1'-0"

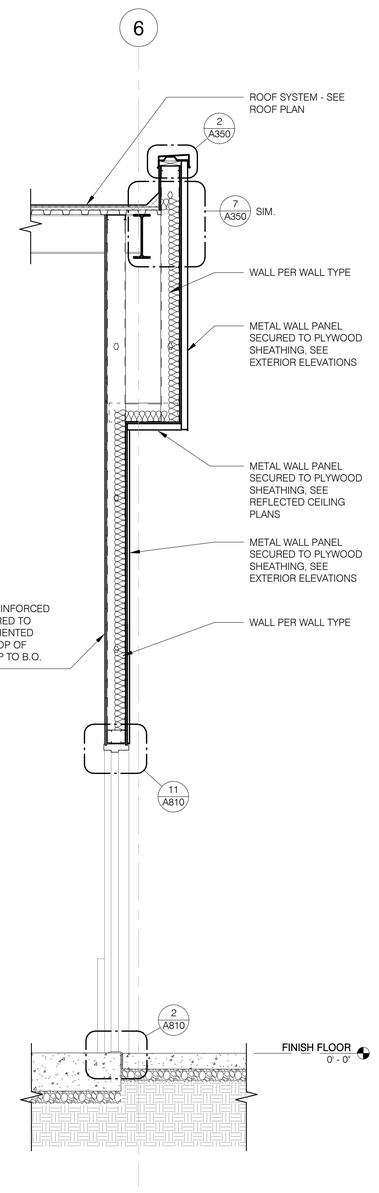

2 WALL SECTION - SQUARE DOOR ARCH
1/2" = 1'-0"

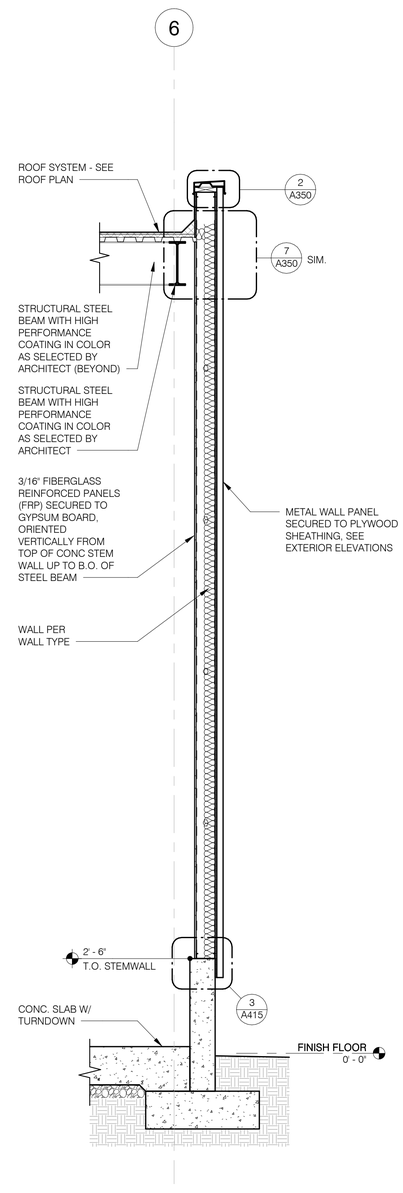

1 WALL SECTION - TYPICAL WALL
1/2" = 1'-0"

Issue Date:	10 JULY 2026		
Revisions:	#	Description	Date

18924
Z. JAN E.
LORANT
Date Signed 08/14/26
ARIZONA U.S.A.
EXPIRES 6/30/2027

gabor lorant architects
3326 n. 3rd avenue suite 200
phoenix, arizona 85013
tel: 602.667.9090
fax: 602.667.9133
gaborlorant.com
gla Project No.: 24102
gla

ARIZONA DEPARTMENT OF TRANSPORTATION
PROJECT DELIVERY AND OPERATIONS DIVISION
PROJECT MANAGEMENT GROUP

SAN SIMON PORT OF ENTRY
WALL SECTIONS - INSPECTION BUILDING

ROUTE	MILEPOST	STRUCTURE NO.
I-10	383	

F.H.W.A. Arizona Division	STATE	PROJECT NO.	FEDERAL ID NO.	SHEET NO.	TOTAL SHEETS	RECORD DRAWING
	ARIZ.	010 CH 383	010-F(238)T	106	200	

LOCATION: SAN SIMON PORT OF ENTRY (POE)

TRACS NO. F0728 01C

DWG NO. **A520**

___ OF ___

9/22/2026 3:03:16 PM

DO NOT SCALE DRAWINGS. DO NOT PLOT 'SCALE TO FIT'. THIS DOCUMENT IS FORMATTED FOR THE ANSI D (22"x34") SHEET SIZE.
FULL-SIZE PLOT ON ANSI D (22"x34") PAPER ONLY. HALF-SIZE PLOT ON 11"x17" PAPER ONLY.

STAPLE ZONE

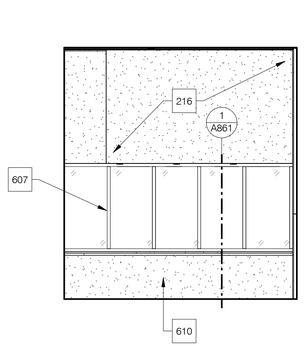

1 LOBBY - WEST
1/4" = 1'-0"

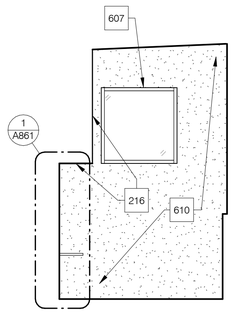

2 LOBBY - NORTH
1/4" = 1'-0"

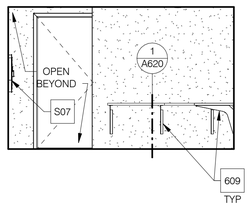

3 PERMIT OFFICE - NORTH
1/4" = 1'-0"

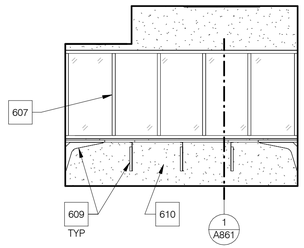

4 PERMIT OFFICE - EAST
1/4" = 1'-0"

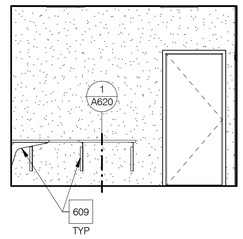

5 PERMIT OFFICE - SOUTH
1/4" = 1'-0"

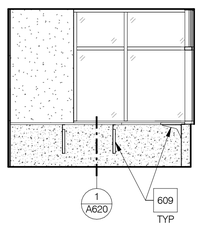

6 WEIGHMASTER - WEST
1/4" = 1'-0"

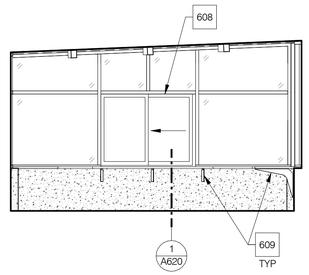

7 WEIGHMASTER - NORTH
1/4" = 1'-0"

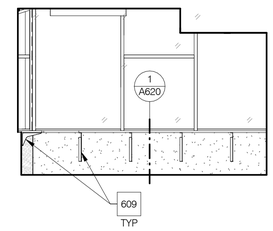

8 WEIGHMASTER - EAST
1/4" = 1'-0"

~	KEYNOTES - NEW WORK
100	STEEL COLUMN - WITH PAINTED FINISH IN COLOR AS SELECTED BY ARCHITECT WHERE EXPOSED TO VIEW
103	MECHANICAL CHASE
108	SOLID SURFACE MATERIAL COUNTERTOP
216	CEILING SOFFIT CONSTRUCTED OF 2-1/2" METAL STUDS @ 16" O.C. AND 1/2" GYPSUM BOARD
607	BALLISTIC-RESISTANT WINDOW FRAME ASSEMBLY
608	SLIDING ALUMINUM STOREFRONT TRANSACTION WINDOW
609	COUNTERTOP SUPPORT BRACKET
610	BALLISTIC-RESISTANT WALL - SEE WALL TYPE
S01	SEMI-RECESSED FIRE EXTINGUISHER CABINET
S02	SEMI-RECESSED DEFIBRILLATOR (AED) CABINET
S07	SEMI-RECESSED DEFIBRILLATOR (AED) CABINET. MOUNT CABINET WITH BOTTOM AT TOP OF CONCRETE STEM WALL.

GENERAL NOTES

1. SEE SHEET A640 FOR ADA & TOILET ACCESSORY GUIDELINES THAT INCLUDE MOUNTING HEIGHTS AND REQUIRED CLEARANCES FOR THOSE ITEMS.
2. SEE ROOM FINISH SCHEDULE FOR FLOOR/WALL BASE - NOT SHOWN ON INTERIOR ELEVATIONS.
3. SEE FINISH & MATERIAL LEGEND ON SHEET A651.
4. FOR FRAMED WALLS, ALL DIMENSIONS ARE FROM CENTERLINE OF STUD TO CENTERLINE OF STRUCTURAL GRID, U.N.O. FOR MASONRY WALLS, ALL DIMENSIONS ARE FROM FACE OF MASONRY TO FACE OF MASONRY OR CENTERLINE OF STRUCTURAL GRID, U.N.O. VERIFY ALL EXISTING DIMENSIONS IN FIELD.
5. SEE SHEET A180 FOR WALL TYPES AND A190 FOR WALL FRAMING DETAILS.
6. SEE DOOR SCHEDULE AND ELECTRICAL DOCUMENTS FOR ACCESS CONTROL LOCATIONS (I.E. CARD READERS).

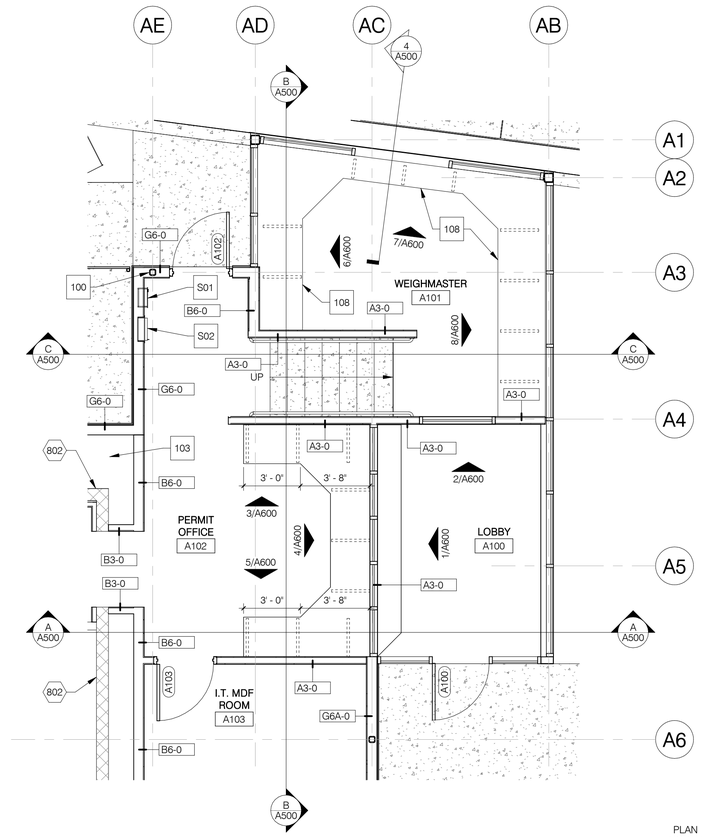

A ENLARGED FLOOR PLAN - ADMIN BUILDING
1/4" = 1'-0"

PLAN NORTH NORTH

18924
Z. JAN E.
LORANT
Date Signed 07/10/25
REGISTERED ARCHITECT
ARIZONA U.S.A.
EXPIRES 6/30/2027

Issue Date:	10 JULY 2026	
Revisions:	# Description	Date

gabor lorant architects
3326 n. 3rd avenue suite 200
phoenix, arizona 85013
tel: 602.667.9090
fax: 602.667.9133
gaborlorant.com
gla Project No.: 24102

ARIZONA DEPARTMENT OF TRANSPORTATION
PROJECT DELIVERY AND OPERATIONS DIVISION
PROJECT MANAGEMENT GROUP

SAN SIMON PORT OF ENTRY
INTERIOR ELEVATION & ENLARGED PLANS - ADMIN BUILDING

ROUTE I-10
MILEPOST 383
STRUCTURE NO.

F.H.W.A. Arizona Division	STATE	PROJECT NO.	FEDERAL ID NO.	SHEET NO.	TOTAL SHEETS	RECORD DRAWING
	ARIZ.	010 CH 383	010-F(238)T	107	200	

LOCATION SAN SIMON PORT OF ENTRY (POE)

TRACS NO. F0728 01C

DWG NO. **A600**
___ OF ___

9/22/2026 3:03:17 PM

DO NOT SCALE DRAWINGS. DO NOT PLOT 'SCALE TO FIT'. THIS DOCUMENT IS FORMATTED FOR THE ANSI D (22"x34") SHEET SIZE.
FULL-SIZE PLOT ON ANSI D (22"x34") PAPER ONLY. HALF-SIZE PLOT ON 11"x17" PAPER ONLY.

STAPLE ZONE

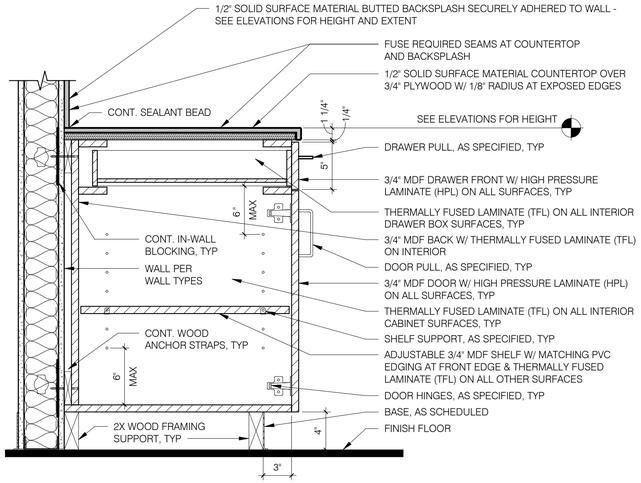

3 WOODWORK BASE CABINET WITH TOP DRAWER
1 1/2" = 1'-0"

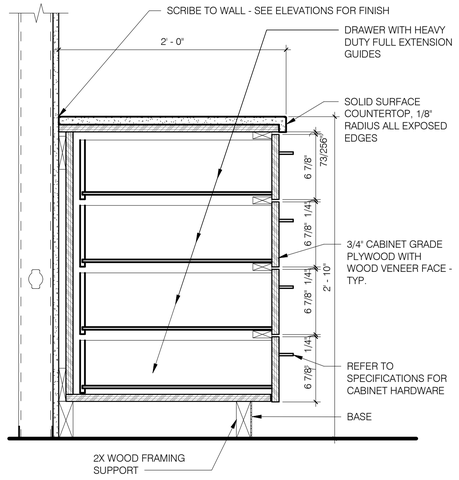

2 WOODWORK BASE CABINET WITH DRAWERS
1 1/2" = 1'-0"

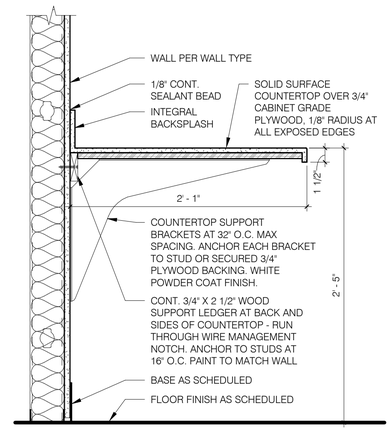

1 WOODWORK COUNTERTOP WORK SURFACE
1 1/2" = 1'-0"

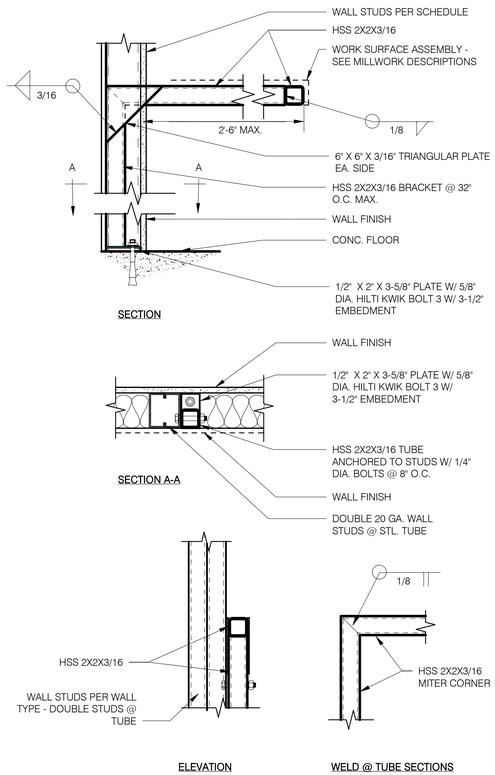

15 COUNTERTOP STEEL TUBE SUPPORT
1 1/2" = 1'-0"

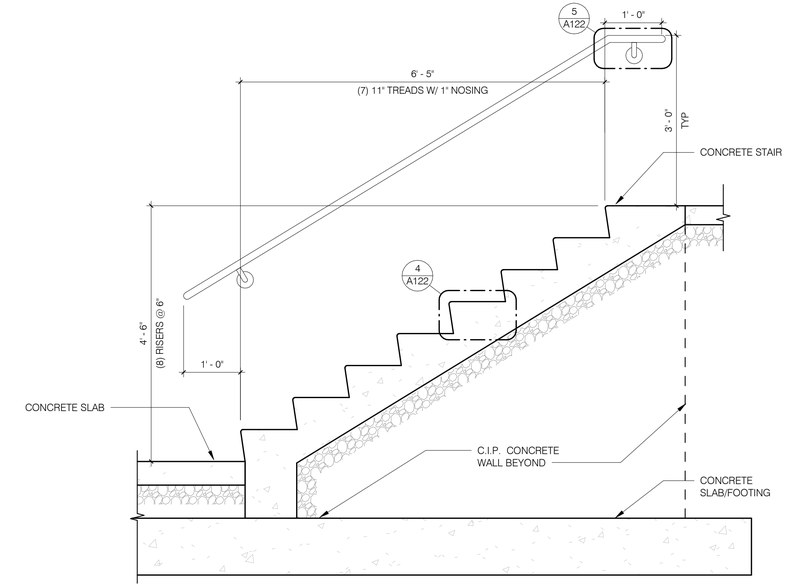

11 CONCRETE STAIR
3/4" = 1'-0"

9/22/2026 3:03:17 PM



Issue Date:	10 JULY 2026		
Revisions:	#	Description	Date

gabor lorant architects
3326 n. 3rd avenue suite 200
phoenix, arizona 85013
tel: 602.667.9090
fax: 602.667.9133
gaborlorant.com

gla Project No.: 24102

gla

ARIZONA DEPARTMENT OF TRANSPORTATION
PROJECT DELIVERY AND OPERATIONS DIVISION
PROJECT MANAGEMENT GROUP

SAN SIMON PORT OF ENTRY
INTERIOR DETAILS

ROUTE I-10
MILEPOST 383
STRUCTURE NO.

F.H.W.A. Arizona Division	STATE	PROJECT NO.	FEDERAL ID NO.	SHEET NO.	TOTAL SHEETS	RECORD DRAWING
	ARIZ.	010 CH 383	010-F(238)T	108	200	

LOCATION SAN SIMON PORT OF ENTRY (POE)

TRACS NO. F0728 01C

DWG NO. **A620**

___ OF ___

DO NOT SCALE DRAWINGS. DO NOT PLOT 'SCALE TO FIT'. THIS DOCUMENT IS FORMATTED FOR THE ANSI D (22"x34") SHEET SIZE.
FULL-SIZE PLOT ON ANSI D (22"x34") PAPER ONLY. HALF-SIZE PLOT ON 11"x17" PAPER ONLY.

STAPLE ZONE

INFORMATION ON THIS SHEET IS FOR GENERAL GUIDANCE ONLY AND IS NOT TO SCALE. SOME CONDITIONS SHOWN MAY NOT APPLY TO THIS PROJECT. TEXT, NOTES, CONDITIONS, DIMENSIONS OR FINISHES ON OTHER ARCHITECTURAL SHEETS OVERRIDE INFORMATION FOUND ON THIS SHEET. NOT ALL TOILET ACCESSORIES, PLUMBING FIXTURES, OR OTHER ITEMS SHOWN IN THESE GUIDELINES MAY BE INCLUDED IN THE SCOPE OF WORK. SEE PLANS, INTERIOR ELEVATIONS, SECTIONS AND SPECIFICATIONS FOR SCOPE OF WORK.



SIDE ELEVATION

CARD READERS & DOOR OPERATORS

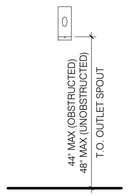

FRONT ELEVATION

SOAP DISPENSER

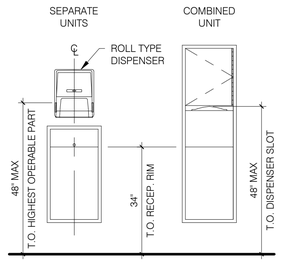

FRONT ELEVATION

PAPER TOWEL DISPENSER & WASTE RECEPTACLE

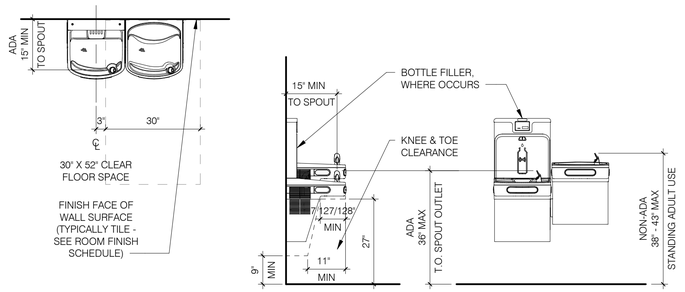

PLAN | SIDE ELEVATION | FRONT ELEVATION

DRINKING FOUNTAINS

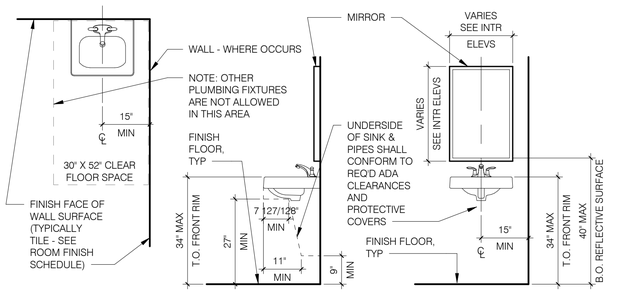

PLAN | SIDE ELEVATION | FRONT ELEVATION

NOTE: SOME TOILET ACCESSORIES NOT SHOWN FOR CLARITY.

WALL-HUNG LAVATORIES

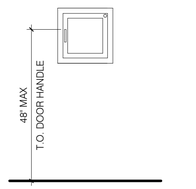

FRONT ELEVATION

AUTOMATED EXTERNAL DEFIBRILLATOR (AED) CABINET

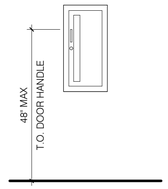

FRONT ELEVATION

FIRE EXTINGUISHER CABINET

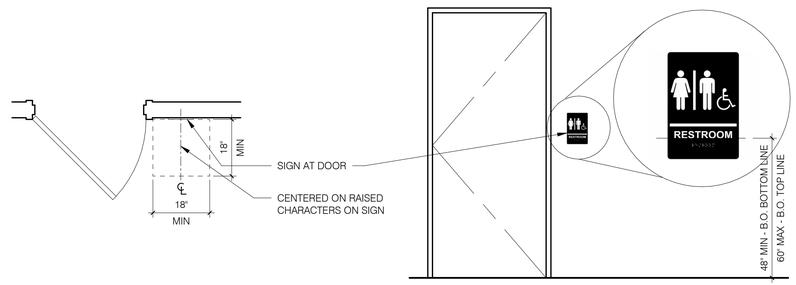

PLAN | FRONT ELEVATION

SIGNAGE

18924
Z. JAN E. LORANT
Date Signed 07/10/26
ARIZONA U.S.A.
EXPIRES 6/30/2027

gabor lorant architects
3326 n. 3rd avenue suite 200
phoenix, arizona 85013
tel: 602.667.9090
fax: 602.667.9133
gaborlorant.com
gla Project No.: 24102

Issue Date:	10 JULY 2026	
Revisions:	# Description	Date

ARIZONA DEPARTMENT OF TRANSPORTATION
PROJECT DELIVERY AND OPERATIONS DIVISION
PROJECT MANAGEMENT GROUP

SAN SIMON PORT OF ENTRY
ADA & MOUNTING HEIGHT DETAILS

ROUTE I-10
MILEPOST 383
STRUCTURE NO.

F.H.W.A. Arizona Division	STATE	PROJECT NO.	FEDERAL ID NO.	SHEET NO.	TOTAL SHEETS	RECORD DRAWING
	ARIZ.	010 CH 383	010-F(238)T	109	200	

LOCATION: SAN SIMON PORT OF ENTRY (POE)
TRACS NO. F0728 01C
DWG NO. **A640**
___ OF ___

9/22/2026 3:03:17 PM

DO NOT SCALE DRAWINGS. DO NOT PLOT 'SCALE TO FIT'. THIS DOCUMENT IS FORMATTED FOR THE ANSI D (22"x34") SHEET SIZE.
FULL-SIZE PLOT ON ANSI D (22"x34") PAPER ONLY. HALF-SIZE PLOT ON 11"x17" PAPER ONLY.

STAPLE ZONE

ROOM FINISH SCHEDULE LEGEND

GENERAL NOTES

1. REFER TO THE DRAWINGS FOR MORE INFORMATION ON THE LOCATIONS AND EXTENT OF FINISHES AND MATERIALS, ESPECIALLY WHEN MORE THAN ONE FINISH IS LISTED IN THE SCHEDULE.
2. FINISHES AND MATERIALS LISTED HEREIN ARE THE BASIS OF DESIGN, SEE SPECIFICATIONS FOR SUBSTITUTION REQUIREMENTS. SEE FINISH & MATERIAL LEGEND.
3. SEE SHEET A680 FOR SIGNAGE TYPE DETAILS.

ABBREVIATIONS

CFS	CONCRETE FLOORS - SEALED
CMB	CEMENT BOARD
CMU	CONCRETE MASONRY UNIT
CONC	CONCRETE
CT	CERAMIC TILE & GROUT
CWS	CONCRETE WALLS - SEALED
ETR	EXISTING TO REMAIN
ETS	EXPOSED TO STRUCTURE
EX / EXIST	EXISTING
FAC	FACTORY FINISH
GB	GYPSUM BOARD
HPC	HIGH PERFORMANCE COATING
INTG	INTEGRAL COVE BASE
MTL	METAL
MRGB	MOLD-RESISTANT GYPSUM BOARD
P	PAINT
PCT	PORCELAIN TILE & GROUT
PLAM	PLASTIC LAMINATE
PLWD	3/4" FIRE RETARDANT TREATED PLYWOOD
PWC	PROTECTIVE WALL COVERING
RB	RUBBER BASE
RES	RESINOUS FLOORING
RVF	RESILIENT VINYL FLOORING
SS	STAINLESS STEEL
SSM	SOLID SURFACE MATERIAL
TR	TRIM
WDC	WINDOW COVERINGS

REMARKS

A. VERIFY INSTALLATION LOCATION OF SIGNAGE WITH OWNER/ARCHITECT.
B. PROVIDE 3/4" THICK AC GRADE FIRE-RETARDANT-TREATED (FRT) PLYWOOD FROM 2'-0" AFF TO 10'-0" AFF ON ALL WALLS IN THIS I.T. ROOM. SECURELY SCREW PLYWOOD OVER GYPSUM BOARD. PROVIDE TWO (2) COATS OF INTUMESCENT FIRE RESISTANT COATING ON EXPOSED SURFACES OF PLYWOOD EQUAL TO FIREFREE 88 (IN WHITE COLOR) AS MANUFACTURED BY FIREFREE COATINGS, INC. A FIRE RATING SYMBOL SHALL BE EXPOSED TO VIEW ON EACH SHEET OF PLYWOOD.
C. PROVIDE JOINT SEALANT AT INTERSECTION OF CONCRETE STEM WALL AND CONCRETE FLOOR (COLOR TBD BY ARCHITECT TO MATCH CONCRETE).
D. 42" HIGH PROTECTIVE WALL COVERING WAINSCOT WITH TOP TRIM AND CORNER GUARDS.
E. TILE OVER CEMENT BOARD (CMB) AT DRINKING FOUNTAIN - SEE INTERIOR ELEVATIONS.
F. PROVIDE (1) ROW OF FULL 4' X 8' SHEETS OF FRP, VERTICALLY ORIENTED, INSTALLED DIRECTLY TO METAL STUD WALL FRAMING ABOVE CONCRETE STEM WALL. EXPOSED FASTENERS SHALL BE PAINTED OR COLOR TO MATCH FRP.

ROOM FINISH SCHEDULE - ADMIN BUILDING

NO.	ROOM NAME	FLOOR		WALLS								MILLWORK		WINDOW COVERINGS	SIGNAGE	REMARKS
				NORTH		EAST		SOUTH		WEST		COUNTERTOPS & BACKSPLASHES	CABINETS & SUPPORTS			
		FINISH	BASE	SURFACE	FINISH	SURFACE	FINISH	SURFACE	FINISH	SURFACE	FINISH					
A100	LOBBY	CFS-2	RB-1	GB	P-2	CONC / ASF	CWS-1 / FAC	ASF	FAC	GB / ASF	P-2 / FAC	SSM-1	MTL	WDC-1	---	
A101	WEIGHMASTER	CFS-2	RB-1	CONC / ASF	CWS-1 / FAC	GB / ASF	P-2 / FAC	GB / ASF	P-2	CONC / GB / ASF	CWS-1 / P-2 / FAC	SSM-1	MTL / PL-1	WDC-1	S-4	
A102	PERMIT OFFICE	CFS-2	RB-1	GB	P-2	GB / ASF	P-2 / FAC	GB	P-2	GB	P-2	SSM-1	MTL / PL-1	---	S-4 / S-6	D
A103	I.T. MDF ROOM	CFS-2	RB-1	GB	P-2 / PLWD	GB	P-2 / PLWD	GB	P-2 / PLWD	GB	P-2 / PLWD	---	---	---	S-4	B
A104	HALL	CFS-2	RB-1	GB	P-2	GB	P-2	GB	P-2	GB	P-2	---	---	---	S-4 / S-6	D
A105	EXISTING ENFORCEMENT OFFICE	ETR	ETR	ETR	ETR	ETR	ETR	ETR	ETR	ETR	ETR	---	---	ETR	S-5	
A106	OFFICE	CFS-2	RB-1	GB	P-2	GB	P-2	GB	P-2	GB	P-2	---	---	WDC-1	S-5	
A107	HALL	CFS-2	RB-1	ETR	ETR	ETR	ETR	ETR	ETR	ETR	ETR	---	---	---	S-4	
A108	MEN	ETR	ETR	ETR	ETR	ETR	ETR	ETR	ETR	ETR	ETR	---	---	ETR	S-1	
A109	JANITOR	ETR	ETR	ETR	ETR	ETR	ETR	ETR	ETR	ETR	ETR	---	---	---	S-4	
A110	WOMEN	ETR	ETR	ETR	ETR	ETR	ETR	ETR	ETR	ETR	ETR	---	---	---	S-2	
A111	BREAK ROOM	ETR	ETR	ETR	ETR	ETR	ETR	ETR	ETR	ETR	ETR	ETR	ETR	ETR	S-4	
A112	HALL	ETR	ETR	ETR	ETR	ETR	ETR	ETR	ETR	ETR	ETR	---	---	ETR	S-4	
A113	STAFF WOMEN	ETR	ETR	ETR	ETR	ETR	ETR	ETR	ETR	ETR	ETR	---	---	---	S-2	
A114	STAFF MEN	ETR	ETR	ETR	ETR	ETR	ETR	ETR	ETR	ETR	ETR	---	---	---	S-1	

ROOM FINISH SCHEDULE - INSPECTION BUILDING

NO.	ROOM NAME	FLOOR		WALLS								MILLWORK		WINDOW COVERINGS	SIGNAGE	REMARKS
				NORTH		EAST		SOUTH		WEST		COUNTERTOPS & BACKSPLASHES	CABINETS & SUPPORTS			
		FINISH	BASE	SURFACE	FINISH	SURFACE	FINISH	SURFACE	FINISH	SURFACE	FINISH					
101	INSPECTION BAY #1	CFS-1	---	CONC / MSF	CWS-1 / FRP-1	CONC / MSF	CWS-1 / FRP-1	CONC / MSF	CWS-1 / FRP-1	CONC / MSF	CWS-1 / FRP-1	---	---	---		C, F
102	INSPECTION BAY #2	CFS-1	---	CONC / MSF	CWS-1 / FRP-1	CONC / MSF	CWS-1 / FRP-1	CONC / MSF	CWS-1 / FRP-1	CONC / MSF	CWS-1 / FRP-1	---	---	---		C, E, F
103	AIR COMPRESSOR ROOM	CFS-1	RB-1	CONC / GB	CWS-1 / P-4	GB	P-4	GB	P-4	GB	P-4	---	---	---	S-4	C

18924
Z. JAN E. LORANT
Date Signed 07/10/26
ARIZONA U.S.A.
EXPIRES 6/30/2027

gabor lorant architects
3326 n. 3rd avenue suite 200
phoenix, arizona 85013
tel: 602.667.9090
fax: 602.667.9133
gaborlorant.com
gla Project No.: 24102

Issue Date:	10 JULY 2026	
Revisions:	# Description	Date

ARIZONA DEPARTMENT OF TRANSPORTATION
PROJECT DELIVERY AND OPERATIONS DIVISION
PROJECT MANAGEMENT GROUP

SAN SIMON PORT OF ENTRY
ROOM FINISH SCHEDULE

ROUTE I-10
MILEPOST 383
STRUCTURE NO.

F.H.W.A. Arizona Division	STATE	PROJECT NO.	FEDERAL ID NO.	SHEET NO.	TOTAL SHEETS	RECORD DRAWING
	ARIZ.	010 CH 383	010-F(238)T	110	200	

LOCATION: SAN SIMON PORT OF ENTRY (POE)

TRACS NO. F0728 01C

DWG NO. **A650**

___ OF ___

9/22/2026 3:03:17 PM

DO NOT SCALE DRAWINGS. DO NOT PLOT SCALE TO FIT: THIS DOCUMENT IS FORMATTED FOR THE ANSI D (22"x34") SHEET SIZE.
FULL-SIZE PLOT ON ANSI D (22"x34") PAPER ONLY. HALF-SIZE PLOT ON 11"x17" PAPER ONLY.

STAPLE ZONE

FINISH & MATERIAL LEGEND

NOTE: FINISHES AND MATERIALS LISTED HEREIN ARE THE BASIS OF DESIGN, SEE SPECIFICATIONS FOR SUBSTITUTION REQUIREMENTS.

FINISH / MATERIAL MARK	MANUFACTURER	DESCRIPTION / DETAILS	SPECIFICATION CSI NUMBER	NOTES
ACOUSTIC CEILING TILE			09 51 00	
ACT-1	USG	RADAR / SQ EDGE / 24" X 48" X 5/8" / 0.55 NRC / COLOR: WHITE DONN DX/DXL HIGH RECYCLED CONTENT 15/16" EXPOSED TEE, COLOR: FLAT WHITE 050		
CERAMIC TILE & GROUT			09 31 00	
CT-1	DALTILE	4" X 16" RECTANGULAR / THICKNESS: 3/8" / FINISH: GLOSSY SERIES: COLOR WHEEL LINEAR COLOR: DESERT GRAY X114 / INSTALLATION: VERTICAL STACK		WALL TILE - FIELD COLOR
	LATICRETE	EPOXY GROUT COLOR: 78 STERLING SILVER / GROUT WIDTH: 1/16"		
CT-2	DALTILE	4" X 12" FLAT TOP COVE BASE / THICKNESS: 5/16" / FINISH: GLOSSY SERIES: COLOR WHEEL LINEAR COLOR: DESERT GRAY X114 / INSTALLATION: HORIZONTAL		WALL TILE - ACCENT COLOR
	LATICRETE	EPOXY GROUT COLOR: 78 STERLING SILVER / GROUT WIDTH: 1/16"		
CONCRETE FLOOR - SEALED			03 30 00	
CFS-1	EUCLID CHEMICAL	EUCO DIAMOND HARD (LIQUID DENSIFIER AND SEALER)		EXPOSED INTERIOR CONCRETE FLOORS
CFS-2	EUCLID CHEMICAL	BARACADE WB 244		EXPOSED INTERIOR CONCRETE FLOORS - PIT LEVEL
CONCRETE WALL - SEALED			03 30 00	
CWS-1	EUCLID CHEMICAL	BARACADE WB 244 (WATER REPELLENT SEALER)		EXPOSED CONCRETE STEM WALLS (INTR & EXTR)
ELECTRICAL LIGHT FIXTURES (EXTERIOR)				SEE ELECTRICAL DRAWINGS & SPECIFICATIONS
---	LITHONIA	TYPE: WDGE2 | COLOR: DNAXD (NATURAL ALUMINUM)		
---	PINNACLE	TYPE: EDGE | COLOR: S - METALLIC SILVER		
ELECTRICAL LIGHT SWITCH & CONTROL COVER PLATES				SEE ELECTRICAL DRAWINGS & SPECIFICATIONS
---	---	COLOR / FINISH: BRUSHED STAINLESS STEEL		
ELECTRICAL TEL/DATA COVER PLATES				SEE ELECTRICAL DRAWINGS & SPECIFICATIONS
---	---	COLOR: GREY		
FIBERGLASS REINFORCED PANELING (FRP)			06 83 16	
FRP-1	FORMGLAS	COLOR: WHITE / SURFACE: SMOOTH LAYOUT: VERTICALLY ORIENT 4X SHEETS		INTERIOR INSPECTION BUILDING WALLS
HIGH PERFORMANCE COATING			09 96 00	
HPC-1	DUNN-EDWARDS	COLOR: DET611 IRON-IC, SHEEN: SEMI-GLOSS		EXTR SIDE OF EXTR HM DOORS & FRAMES
HPC-2	SHERWIN-WILLIAMS	COLOR: SW7019 GAUNTLET GRAY, SHEEN: SEMI-GLOSS		INTR SIDE OF EXTR HM DOORS & FRAMES
HPC-3	DUNN-EDWARDS	COLOR: TBD, SHEEN: SEMI-GLOSS		ROOF MECH SCREEN WALL STEEL
HPC-4	DUNN-EDWARDS	COLOR: TBD, SHEEN: SEMI-GLOSS (TO MATCH/BLEND WITH EXPOSED CONCRETE STEM WALL)		EXTR STEEL PLATE & COLS AT OVERHEAD COILING DOORS
HPC-5	DUNN-EDWARDS	COLOR: AS SELECTED BY ARCHITECT, SHEEN: SEMI-GLOSS		EXTR SIDE OF EXISTING EXTR HM DOORS & FRAMES
METAL COPING (WALL CAPS)			07 60 00	
MCO-1	ATAS INTERNATIONAL	TO MATCH MWP-1 WITH CLEAR ANODIZED FINISH		
MCO-2	ATAS INTERNATIONAL	TO MATCH MWP-2 WITH 70% PVDF PREMIUM FINISH COLOR: COLOR: COPPERTONE (23)		

FINISH & MATERIAL LEGEND (CONTINUED)

FINISH / MATERIAL MARK	MANUFACTURER	DESCRIPTION / DETAILS	SPECIFICATION CSI NUMBER	NOTES
METAL BAR GRATING			05 50 00	
MBG-1	MCNICHOLS	STANDARD-DUTY WELDED, RECTANGULAR BAR, GW-100-A, 19-W-4 SPACING, GALVANIZED STEEL, HOT DIPPED, 1" X 1/8"		
METAL WALL, FASCIA, & SOFFIT PANELS			07 42 13	
MWP-1	ATAS INTERNATIONAL	HEX PERFORATED CORRA-MAX WITH 70% PVDF PREMIUM FINISH COLOR: TITANIUM (35) / INSTALLATION: HORIZONTAL SEAM ORIENTATION		
MWP-2	ATAS INTERNATIONAL	BELVEDERE 6" SHORT RIB BWK360 WITH 70% PVDF PREMIUM FINISH COLOR: COPPERTONE (23) / INSTALLATION: VERTICAL SEAM ORIENTATION		
MWP-3	ATAS INTERNATIONAL	OPALINE OPW085 WITH 70% PVDF STANDARD FINISH COLOR: DOVE GREY (13) / INSTALLATION: VERTICAL SEAM ORIENTATION		
OVERHEAD COILING DOORS			08 33 23	
OCD-1	OVERHEAD DOOR CORP.	POWDERGUARD MAX COLOR: RAL 7039 - QUARTZ GREY		
PAINT			09 91 00	
P-1	DUNN-EDWARDS	COLOR: DEHW08 CLASSIC WHITE, SHEEN: FLAT		CEILINGS & SOFFITS
P-2	DUNN-EDWARDS	COLOR: DEW341 SWISS COFFEE, SHEEN: SEMI-GLOSS		INTERIOR WALLS
P-3	SHERWIN-WILLIAMS	COLOR: SW7019 GAUNTLET GRAY, SHEEN: SEMI-GLOSS		INTERIOR HM DOORS & FRAMES
P-4	DUNN-EDWARDS	COLOR: DEW341 SWISS COFFEE, SHEEN: EGGSHELL		INTERIOR WALLS
PLASTIC LAMINATE			06 40 00	
PLAM-1	FORMICA	COLOR: GRAPHITE TWILL 8829-58		
PORCELAIN TILE & GROUT			09 31 00	
PCT-1	AMERICAN OLEAN	12" X 24" RECTANGULAR / THICKNESS: 5/16" / FINISH: MATTE STYLE: THEORETICAL / COLOR: CREATIVE GRAY TH96 / INSTALLATION: GRID		LOCKER & SHOWER ROOM FLOOR TILE
	LATICRETE	EPOXY GROUT COLOR: 60 DUSTY GREY / GROUT WIDTH: 1/8"		
RESINOUS FLOORING			09 67 23	
RES-1	KEY RESIN CO.	COLOR: TBD - AS SELECTED BY ARCHITECT / TEXTURE: MEDIUM		
RUBBER BASE			09 65 13	
RB-1	FLEXCO	4" HIGH TS WALLFLOWERS RUBBER (WF-071) / COLOR: 078 UMBER		
SOLID SURFACE MATERIAL			06 40 00	
SSM-1	LG HAUSYS	HI-MACS / COLOR: WALLOWA G157		
THERMOPLASTIC POLYOLEFIN (TPO) ROOFING			07 54 00	
TPO-1	GAF	EVERGUARD WHITE 920		
TRIM			09 31 00	
TR-1	BLANKE	QUARTER CIRCLE TILE TRIM / ALUMINUM - SATIN SILVER, ANODIZED		
TR-2	BLANKE	COVE / ALUMINUM - SATIN SILVER, ANODIZED		
WINDOW COVERINGS (ROLLER WINDOW SHADES)			12 24 00	
WDC-1	MECHOSHADE	FABRIC TYPE: SOHO 1600 SERIES, 3 % OPEN COLOR: AS SELECTED BY ARCHITECT		MANUAL OPERATING SINGLE SHADE

REGISTERED ARCHITECT
18924
Z. JAN E. LORANT
Date Signed 07/10/26
ARIZONA, U.S.A.
EXPIRES 6/30/2027

Issue Date:	10 JULY 2026	
Revisions:	# Description	Date

gabor lorant architects
3326 n. 3rd avenue suite 200
phoenix, arizona 85013
tel: 602.667.9090
fax: 602.667.9133
gaborlorant.com
gla Project No.: 24102

ARIZONA DEPARTMENT OF TRANSPORTATION
PROJECT DELIVERY AND OPERATIONS DIVISION
PROJECT MANAGEMENT GROUP

SAN SIMON PORT OF ENTRY
FINISH & MATERIAL LEGEND

ROUTE I-10
MILEPOST 383
STRUCTURE NO.

F.H.W.A. Arizona Division	STATE	PROJECT NO.	FEDERAL ID NO.	SHEET NO.	TOTAL SHEETS	RECORD DRAWING
	ARIZ.	010 CH 383	010-F(238)T	111	200	

LOCATION: SAN SIMON PORT OF ENTRY (POE)

TRACS NO. F0728 01C

DWG NO. **A651**

____ OF ____

9/22/2026 3:03:18 PM

DO NOT SCALE DRAWINGS. DO NOT PLOT 'SCALE TO FIT'. THIS DOCUMENT IS FORMATTED FOR THE ANSI D (22"x34") SHEET SIZE.
FULL-SIZE PLOT ON ANSI D (22"x34") PAPER ONLY. HALF-SIZE PLOT ON 11"x17" PAPER ONLY.

STAPLE ZONE

GENERAL NOTES

1. SEE ROOM FINISH SCHEDULE AND FINISH & MATERIAL LEGEND FOR FINISH ABBREVIATIONS.

KEY

- CFS-1
- CFS-2
- RES-1
- CFS-2 ON EXISTING CONCRETE

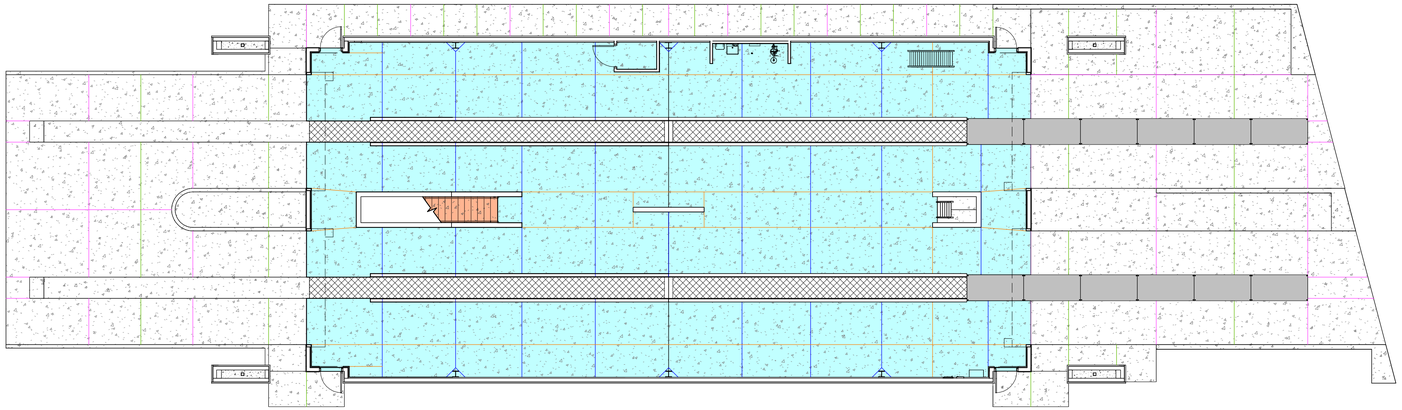

2 FLOOR FINISH PLAN - INSPECTION BUILDING
3/32" = 1'-0"

PLAN NORTH NORTH

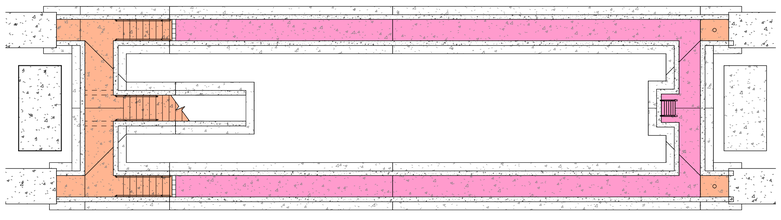

3 FLOOR FINISH PLAN - INSPECTION BUILDING - PIT LEVEL
3/32" = 1'-0"

PLAN NORTH NORTH

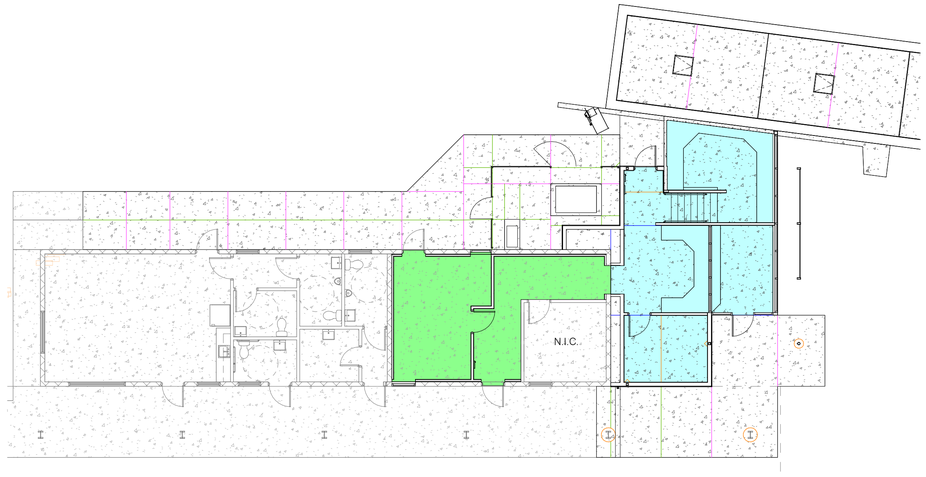

1 FLOOR FINISH PLAN - INSPECTION BUILDING
3/32" = 1'-0"

PLAN NORTH NORTH

18924
Z. JAN E.
LORANT
Date Signed 08/14/26
ARIZONA U.S.A.
EXPIRES 6/30/2027

gabor lorant architects
3326 n. 3rd avenue suite 200
phoenix, arizona 85013
tel: 602.667.9090
fax: 602.667.9133
gaborlorant.com
gla Project No.: 24102

Issue Date:	14 AUGUST 2026	
Revisions:	Δ Description	Date

ARIZONA DEPARTMENT OF TRANSPORTATION
PROJECT DELIVERY AND OPERATIONS DIVISION
PROJECT MANAGEMENT GROUP

SAN SIMON PORT OF ENTRY
FLOOR FINISH PLANS

ROUTE I-10
MILEPOST 383
STRUCTURE NO.

F.H.W.A. Arizona Division	STATE	PROJECT NO.	FEDERAL ID NO.	SHEET NO.	TOTAL SHEETS	RECORD DRAWING
	ARIZ.	010 CH 383	010-F(238)T	112	200	

LOCATION SAN SIMON PORT OF ENTRY (POE)

DWG NO. **A660**

TRACS NO. F0728 01C

___ OF ___

9/22/2026 3:03:18 PM

DO NOT SCALE DRAWINGS. DO NOT PLOT 'SCALE TO FIT'. THIS DOCUMENT IS FORMATTED FOR THE ANSI D (22"x34") SHEET SIZE.
FULL-SIZE PLOT ON ANSI D (22"x34") PAPER ONLY. HALF-SIZE PLOT ON 11"x17" PAPER ONLY.

STAPLE TAPE ZONE

GENERAL NOTES

1. CONTRACTOR SHALL COORDINATE AND CONFIRM THE PRECISE MOUNTING LOCATION OF EACH SIGN WITH THE ARCHITECT & OWNER IN THE FIELD PRIOR TO INSTALLATION.
2. SOME ROOMS & SPACES MAY REQUIRE MULTIPLE SIGNS, SUCH AS ROOMS WITH MULTIPLE DOORS. CONTRACTOR TO CONFIRM QUANTITIES OF EACH SIGN TYPE WITH ARCHITECT & OWNER PRIOR TO FABRICATION & INSTALLATION.
3. FINAL ROOM/SPACE NAMES AND NUMBERS TO BE CONFIRMED WITH ARCHITECT & OWNER PRIOR TO FABRICATION AND INSTALLATION.
4. VERIFY ALL EXISTING DIMENSIONS IN FIELD.

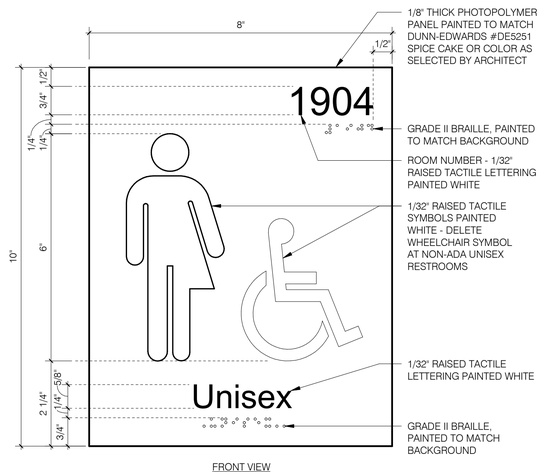

S-3 SIGNAGE TYPE - UNISEX RESTROOM
6" = 1'-0"

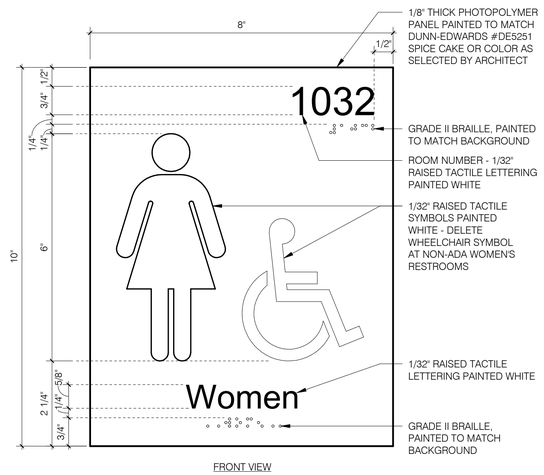

S-2 SIGNAGE TYPE - WOMEN'S RESTROOM
6" = 1'-0"

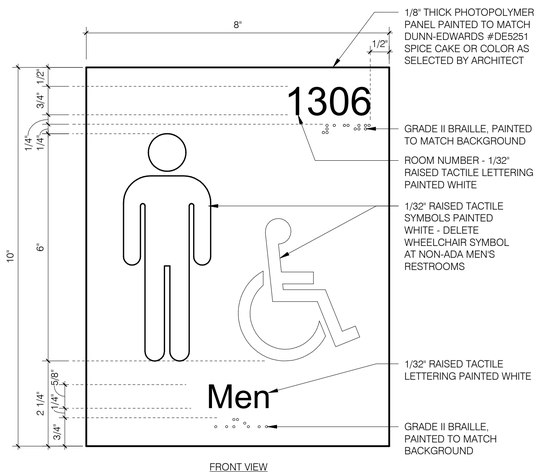

S-1 SIGNAGE TYPE - MEN'S RESTROOM
6" = 1'-0"

S-6 SIGNAGE TYPE - EVACUATION PLAN
3" = 1'-0"

S-5 SIGNAGE TYPE - ADAPTIVE ROOM NAME
6" = 1'-0"

S-4 SIGNAGE TYPE - PERMANENT ROOM NAME
6" = 1'-0"

9/22/2026 3:03:18 PM

18924
Z. JAN E.
LORANT
Date Signed 07/10/26
ARIZONA U.S.A.
EXPIRES 6/30/2027

gabor lorant architects
3326 n. 3rd avenue suite 200
phoenix, arizona 85013
tel: 602.667.9090
fax: 602.667.9133
gaborlorant.com
gla Project No.: 24102

Issue Date:	10 JULY 2026	
Revisions:	# Description	Date

ARIZONA DEPARTMENT OF TRANSPORTATION
PROJECT DELIVERY AND OPERATIONS DIVISION
PROJECT MANAGEMENT GROUP

SAN SIMON PORT OF ENTRY
SIGNAGE DETAILS

ROUTE	MILEPOST	STRUCTURE NO.
I-10	383	

F.H.W.A. Arizona Division	STATE	PROJECT NO.	FEDERAL ID NO.	SHEET NO.	TOTAL SHEETS	RECORD DRAWING
	ARIZ.	010 CH 383	010-F(238)T	113	200	

LOCATION: SAN SIMON PORT OF ENTRY (POE)

TRACS NO. F0728 01C

DWG NO. **A680**

___ OF ___

DO NOT SCALE DRAWINGS. DO NOT PLOT 'SCALE TO FIT'. THIS DOCUMENT IS FORMATTED FOR THE ANSI D (22"x34") SHEET SIZE.
FULL-SIZE PLOT ON ANSI D (22"x34") PAPER ONLY. HALF-SIZE PLOT ON 11"x17" PAPER ONLY.

STAPLE ZONE

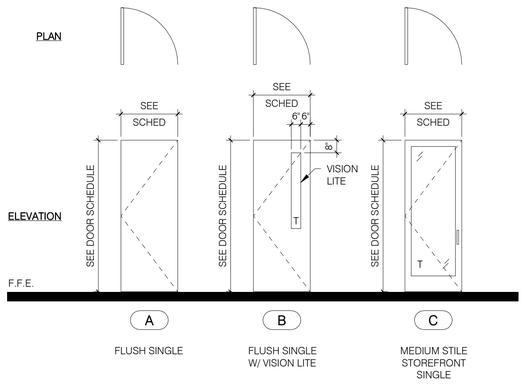

FLUSH SINGLE

FLUSH SINGLE W/ VISION LITE

MEDIUM STILE STOREFRONT SINGLE

DOOR TYPE LEGEND - ADMIN BUILDING
1/4" = 1'-0"

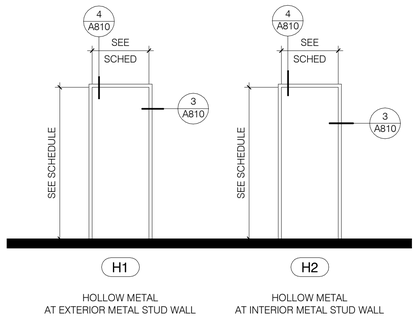

HOLLOW METAL AT EXTERIOR METAL STUD WALL

HOLLOW METAL AT INTERIOR METAL STUD WALL

HOLLOW METAL FRAME TYPES - ADMIN BUILDING
1/4" = 1'-0"

DOOR SCHEDULE - ADMIN BUILDING - EXISTING TO REMAIN

No.	DOOR Width	Height	Thick-ness	Type	Core Mat'l	Face Mat'l	Finish	Glazing Type	FRAME Type	Material	Finish	Threshold Detail (on Sheet A810)	HARDWARE Auto Door Opener	Panic Hdwr	Card Reader (CR)	Hardware Set	Fire Rating (Minutes)	Remarks
A104	3' - 0"	6' - 8"	1 3/4"	ETR	ETR	ETR	HPC-2 / HPC-5	ETR	ETR	ETR	HPC-2 / HPC-5	ETR				ETR	---	A, B, F, G
A105	3' - 0"	7' - 0"	1 3/4"	ETR	ETR	ETR	P-3	---	ETR	ETR	P-3	---				ETR	---	
A106.1	3' - 0"	6' - 8"	1 3/4"	ETR	ETR	ETR	HPC-2 / HPC-5	ETR	ETR	ETR	HPC-2 / HPC-5	ETR				ETR	---	A, B, F, G

DOOR SCHEDULE - ADMIN BUILDING - NEW

No.	DOOR Width	Height	Thick-ness	Type	Core Mat'l	Face Mat'l	Finish	Glazing Type	FRAME Type	Material	Finish	Threshold Detail (on Sheet A810)	HARDWARE Auto Door Opener	Panic Hdwr	Card Reader (CR)	Hardware Set	Fire Rating (Minutes)	Remarks
A100	3' - 0"	8' - 0"	1 3/4"	C	---	AL	FAC	G-1	---	AL	FAC	2			●	5.0	---	
A102	3' - 0"	7' - 0"	1 3/4"	B	EIC	HM	HPC-1 / HPC-2	G-1	H2	HM	HPC-1 / HPC-2	2			●	1.0	---	F
A103	3' - 0"	7' - 0"	1 3/4"	A	IIC	HM	P-3	---	H1	HM	P-3	---			●	3.0	---	
A106.2	3' - 0"	7' - 0"	1 3/4"	A	IIC	HM	P-3	---	H1	HM	P-3	---				4.0	---	

DOOR SCHEDULE LEGEND

GENERAL NOTES

1. SEE SPECIFICATIONS FOR HARDWARE SETS.
2. ALL DOOR HARDWARE SHALL BE ADA ACCESSIBLE.
3. ALL DOORS SHALL OPEN FROM THE INSIDE WITHOUT A KEY OR SPECIAL KNOWLEDGE.
4. FIELD VERIFY ACTUAL DIMENSIONS OF ALL EXISTING OPENINGS TO RECEIVE NEW DOORS AND DOOR FRAMES PRIOR TO FABRICATION.
5. PROVIDE BOX HEADER AT ALL FRAMED OPENINGS WITH A MINIMUM OF DOUBLE STUDS TYPICAL AT EACH JAMB - SEE WALL FRAMING DETAILS.
6. SEE FINISH & MATERIAL LEGEND ON SHEET A650.
7. SEE GLAZING LEGEND ON SHEET A810.

ABBREVIATIONS

AL	ALUMINUM
CLR	CLEAR
FAC	FACTORY FINISH
EIC	EXTERIOR INSULATED CORE
ETR	EXISTING TO REMAIN
EX	EXISTING
G-#	GLAZING - SEE GLAZING LEGEND
HM	HOLLOW METAL
HPC-#	HIGH PERFORMANCE COATING - SEE FINISH & MATERIAL LEGEND
IIC	INTERIOR INSULATED CORE
IVL	INSULATED VISION LITE
MTL	METAL
P-#	PAINT - SEE FINISH & MATERIAL LEGEND
SC	SOLID CORE
SS	STAINLESS STEEL
STL	STEEL
T	TEMPERED GLAZING
WD	WOOD VENEER - BOTH FACES & EDGES

REMARKS

A. EXISTING CARD READER TO REMAIN.
B. BONDO REPAIR HOLLOW METAL DOOR AND FRAME AS NECESSARY PRIOR APPLICATION OF NEW FINISH.
C. DOOR HARDWARE BY OVERHEAD COILING DOOR MFR.
D. FOR JAMB CONDITION, SEE WALL SECTIONS FOR DETAIL(S).
E. FOR HEAD CONDITION, SEE WALL SECTIONS FOR DETAIL(S).
F. PROVIDE PAINT SPLIT ON DOOR AND FRAME - SEE DETAIL 1 / A810
G. REPLACE DOOR THRESHOLD WITH SIMILAR CLEAR ANODIZED ALUMINUM THRESHOLD.

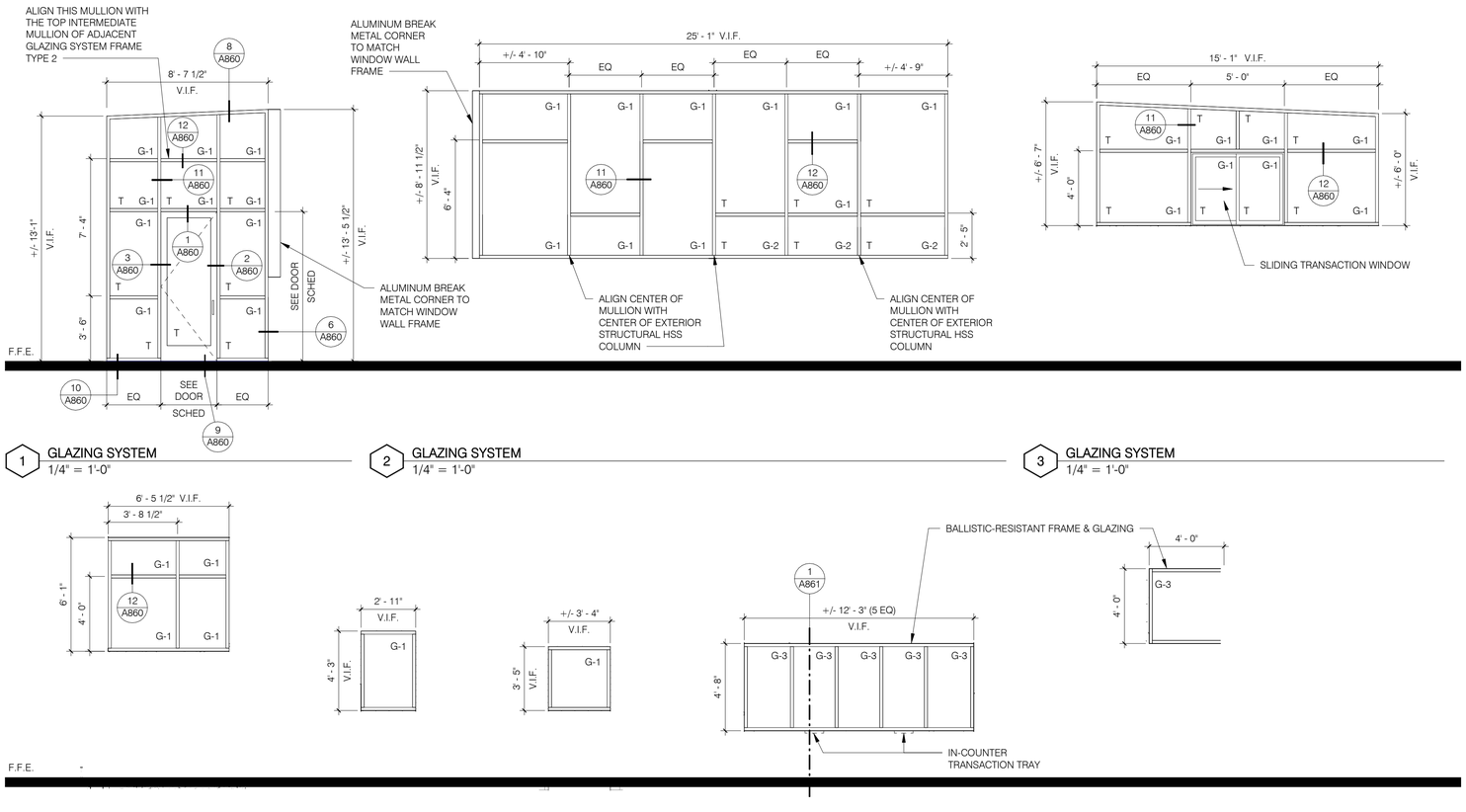

1 GLAZING SYSTEM
1/4" = 1'-0"

2 GLAZING SYSTEM
1/4" = 1'-0"

3 GLAZING SYSTEM
1/4" = 1'-0"

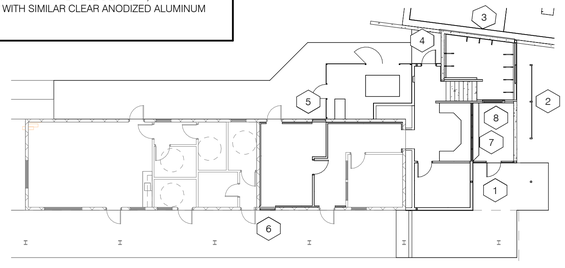

GLAZING SYSTEM KEY PLAN - ADMIN BUILDING
1/16" = 1'-0"

PLAN NORTH

NORTH

4 GLAZING SYSTEM
1/4" = 1'-0"

5 GLAZING SYSTEM
1/4" = 1'-0"

6 GLAZING SYSTEM
1/4" = 1'-0"

7 GLAZING SYSTEM - BALLISTIC-RESISTANT
1/4" = 1'-0"

8 GLAZING SYSTEM - BALLISTIC-RESISTANT
1/4" = 1'-0"

18924
Z. JAN E. LORANT
Date Signed 07/10/26
ARIZONA U.S.A.
EXPIRES 6/30/2027

gabor lorant architects
3326 n. 3rd avenue suite 200
phoenix, arizona 85013
tel: 602.667.9090
fax: 602.667.9133
gaborlorant.com
gla Project No.: 24102

Issue Date:	10 JULY 2026	
Revisions:	Δ Description	Date

ARIZONA DEPARTMENT OF TRANSPORTATION
PROJECT DELIVERY AND OPERATIONS DIVISION
PROJECT MANAGEMENT GROUP

SAN SIMON PORT OF ENTRY
DOOR SCHEDULE - ADMIN BUILDING

ROUTE I-10
MILEPOST 383
STRUCTURE NO.

F.H.W.A. Arizona Division	STATE	PROJECT NO.	FEDERAL ID NO.	SHEET NO.	TOTAL SHEETS	RECORD DRAWING
	ARIZ.	010 CH 383	010-F(238)T	114	200	

LOCATION: SAN SIMON PORT OF ENTRY (POE)

TRACS NO. F0728 01C

DWG NO. **A800**

___ OF ___

9/22/2026 3:03:19 PM

DO NOT SCALE DRAWINGS. DO NOT PLOT 'SCALE TO FIT'. THIS DOCUMENT IS FORMATTED FOR THE ANSI D (22"x34") SHEET SIZE.
FULL-SIZE PLOT ON ANSI D (22"x34") PAPER ONLY. HALF-SIZE PLOT ON 11"x17" PAPER ONLY.

STAPLE ZONE

DOOR SCHEDULE LEGEND

GENERAL NOTES

1. SEE SPECIFICATIONS FOR HARDWARE SETS.
2. ALL DOOR HARDWARE SHALL BE ADA ACCESSIBLE.
3. ALL DOORS SHALL OPEN FROM THE INSIDE WITHOUT A KEY OR SPECIAL KNOWLEDGE.
4. FIELD VERIFY ACTUAL DIMENSIONS OF ALL EXISTING OPENINGS TO RECEIVE NEW DOORS AND DOOR FRAMES PRIOR TO FABRICATION.
5. PROVIDE BOX HEADER AT ALL FRAMED OPENINGS WITH A MINIMUM OF DOUBLE STUDS TYPICAL AT EACH JAMB - SEE WALL FRAMING DETAILS.
6. SEE FINISH & MATERIAL LEGEND ON SHEET A650.
7. SEE GLAZING LEGEND ON SHEET A810.

ABBREVIATIONS

AL	ALUMINUM
CLR	CLEAR
FAC	FACTORY FINISH
EIC	EXTERIOR INSULATED CORE
ETR	EXISTING TO REMAIN
EX	EXISTING
G-#	GLAZING - SEE GLAZING LEGEND
HM	HOLLOW METAL
HPC-#	HIGH PERFORMANCE COATING - SEE FINISH & MATERIAL LEGEND
IIC	INTERIOR INSULATED CORE
IVL	INSULATED VISION LITE
MTL	METAL
P-#	PAINT - SEE FINISH & MATERIAL LEGEND
SC	SOLID CORE
SS	STAINLESS STEEL
STL	STEEL
T	TEMPERED GLAZING
WD	WOOD VENEER - BOTH FACES & EDGES

REMARKS

A. EXISTING CARD READER TO REMAIN.
B. BONDO REPAIR HOLLOW METAL DOOR AND FRAME AS NECESSARY PRIOR APPLICATION OF NEW FINISH.
C. DOOR HARDWARE BY OVERHEAD COILING DOOR MFR.
D. FOR JAMB CONDITION, SEE WALL SECTIONS FOR DETAIL(S).
E. FOR HEAD CONDITION, SEE WALL SECTIONS FOR DETAIL(S).
F. PROVIDE PAINT SPLIT ON DOOR AND FRAME - SEE DETAIL 1 / A810
G. REPLACE DOOR THRESHOLD WITH SIMILAR CLEAR ANODIZED ALUMINUM THRESHOLD.

DOOR SCHEDULE - INSPECTION BUILDING

No.	DOOR Width	Height	Thick-ness	Type	Core Mat'l	Face Mat'l	Finish	Glazing Type	FRAME Type	Material	Finish	Threshold Detail (on Sheet A810)	HARDWARE Auto Door Opener	Panic Hdwr	Card Reader (CR)	Hardware Set	Fire Rating (Minutes)	Remarks
101.1	3' - 0"	8' - 0"	1 3/4"	B	EIC	HM	HPC-1	G-1	H2	HM	HPC-1	2			●	1.0	---	
101.2	3' - 0"	8' - 0"	1 3/4"	B	EIC	HM	HPC-1	G-1	H2	HM	HPC-1	2			●	1.0	---	
101.3	16' - 0"	16' - 0"		D	EIC	STL	FAC	IVL	---	STL	FAC	---				---		C, D, E
101.4	16' - 0"	16' - 0"		D	EIC	STL	FAC	IVL	---	STL	FAC	---				---		C, D, E
102.1	3' - 0"	8' - 0"	1 3/4"	B	EIC	HM	HPC-1	G-1	H2	H	HPC-1	2			●	1.0	---	
102.2	3' - 0"	8' - 0"	1 3/4"	B	EIC	HM	HPC-1	G-1	H2	HM	HPC-1	2			●	1.0	---	
102.3	16' - 0"	16' - 0"		D	EIC	STL	FAC	IVL	---	STL	FAC	---				---		C, D, E
102.4	16' - 0"	16' - 0"		D	EIC	STL	FAC	IVL	---	STL	FAC	---				---		C, D, E
103	3' - 0"	7' - 0"	1 3/4"	A	IIC	HM	P-3	---	H1	HM	P-3	---				2.0	---	

GLAZING LEGEND

TYPE/ MARK	OVERALL NOMINAL THICK-NESS	DESCRIPTION	INT / EXT APPLI-CATION	BASIS OF DESIGN MFR	INSULATING-GLASS UNIT (IGU) MAKEUP: EXTERIOR (OUTBOARD) LITE	AIR SPACE	INTERIOR (INBOARD) LITE	MINIMUM PERFORMANCE REQUIREMENTS PER NFRC 2010 US STANDARD UNITS: SOLAR HEAT GAIN COEFFICIENT (SGHC)	LIGHT TO SOLAR GAIN (LSG)	VISIBLE LIGHT TRANSMITTANCE (VLT)	VISIBLE LIGHT REFLECTANCE EXTR %	VISIBLE LIGHT REFLECTANCE INTR %	STC RATING
G-1	1" (24.7MM)	TINTED LOW-E IGU	EXTERIOR	VITRO ARCH'L GLASS *	1/4" (6MM) SOLARGRAY W/ SOLARBAN 60 ON #2 SURFACE *	1/2" (12.7MM)	1/4" (6MM) CLEAR (NO COATING)	0.25	1.40	35%	6%	10%	---
G-2	1" (24.7MM)	TINTED SPANDREL LOW-E IGU	EXTERIOR	VITRO ARCH'L GLASS *	1/4" (6MM) SOLARGRAY W/ SOLARBAN 60 ON #2 SURFACE *	1/2" (12.7MM)	1/4" (6MM) CLEAR W/ BLACK SPANDREL COATING	0.25	1.40	0%	6%	10%	---
G-3	1-1/4"	CLEAR BALLISTICS-RESISTANT GLAZING - GLASS CLAD POLYCARBONATE (LEVEL 4)	INTERIOR	TOTAL SECURITY SOLUTIONS	---	---	---	---	---	77% MIN	--	--	---

GENERAL NOTES: ALL DOOR GLAZING SHALL BE TEMPERED. ALL EXTERIOR GLAZING SHALL BE TYPE G-1, UNLESS NOTED OTHERWISE.
OTHER GLAZING MARKS: T = FULLY TEMPERED

* ACCEPTABLE SUBSTITUTES FOR EXTERIOR LITE: 1. GUARDIAN GRAY WITH SUNGUARD SN 68 COATING ON #2 SURFACE MANUFACTURED BY GUARDIAN GLASS.
2. EQUIVALENT MANUFACTURED BY VIRACON AND SUBMITTED FOR REVIEW BY ARCHITECT.

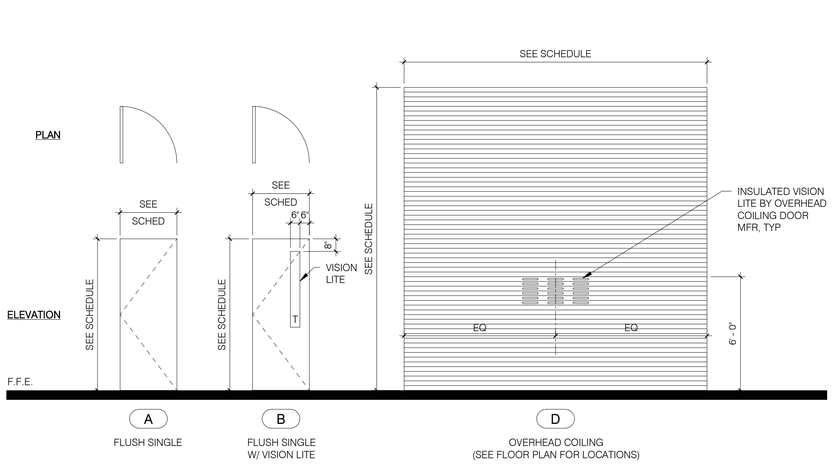

DOOR TYPE LEGEND - INSPECTION BUILDING
1/4" = 1'-0"

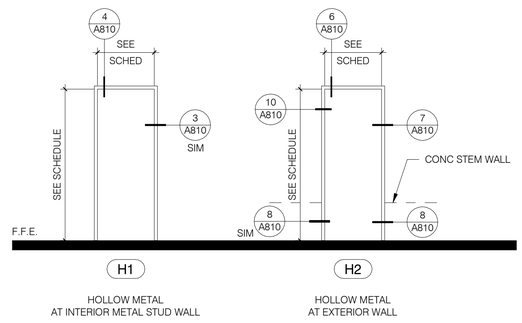

HOLLOW METAL FRAME TYPES - INSPECTION BUILDING
1/4" = 1'-0"

REGISTERED ARCHITECT
18924
Z. JAN E. LORANT
Date Signed 07/10/26
ARIZONA, U.S.A.
EXPIRES 6/30/2027

Issue Date:	10 JULY 2026	
Revisions:	# Description	Date

gabor lorant architects
3326 n. 3rd avenue suite 200
phoenix, arizona 85013
tel: 602.667.9090
fax: 602.667.9133
gaborlorant.com

gla Project No.: 24102

ARIZONA DEPARTMENT OF TRANSPORTATION
PROJECT DELIVERY AND OPERATIONS DIVISION
PROJECT MANAGEMENT GROUP

SAN SIMON PORT OF ENTRY
DOOR SCHEDULE - INSPECTION BUILDING

ROUTE	MILEPOST	STRUCTURE NO.
I-10	383	

F.H.W.A. Arizona Division	STATE	PROJECT NO.	FEDERAL ID NO.	SHEET NO.	TOTAL SHEETS	RECORD DRAWING
	ARIZ.	010 CH 383	010-F(238)T	115	200	

LOCATION: SAN SIMON PORT OF ENTRY (POE)

TRACS NO. F0728 01C

DWG NO. **A805**
___ OF ___

9/22/2026 3:03:20 PM

DO NOT SCALE DRAWINGS. DO NOT PLOT 'SCALE TO FIT'. THIS DOCUMENT IS FORMATTED FOR THE ANSI D (22"x34") SHEET SIZE.
FULL-SIZE PLOT ON ANSI D (22"x34") PAPER ONLY. HALF-SIZE PLOT ON 11"x17" PAPER ONLY.

STAPLE ZONE

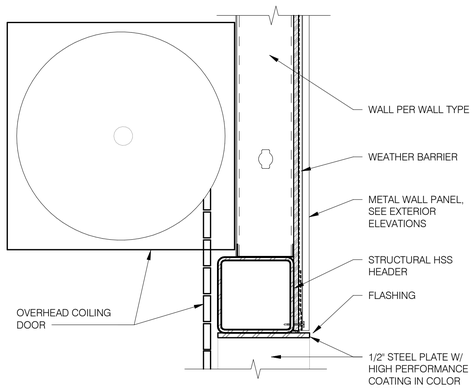

5 OVERHEAD COILING DOOR HEAD
1 1/2" = 1'-0"

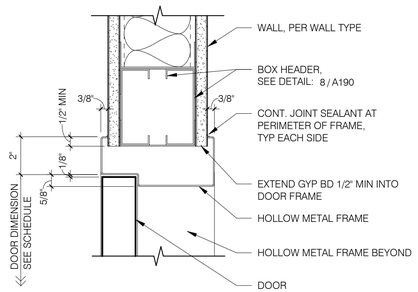

4 HOLLOW METAL HEAD AT INTERIOR METAL STUD WALL
3" = 1'-0"

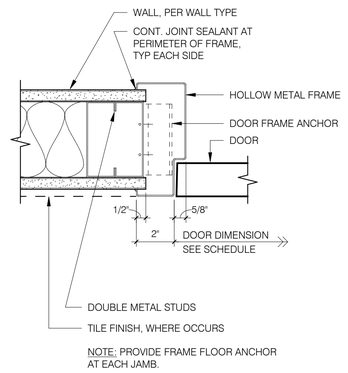

3 HOLLOW METAL JAMB AT INTERIOR METAL STUD WALL
3" = 1'-0"

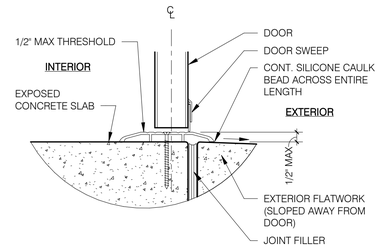

2 THRESHOLD - INTERIOR CONCRETE TO EXTERIOR CONCRETE
3" = 1'-0"

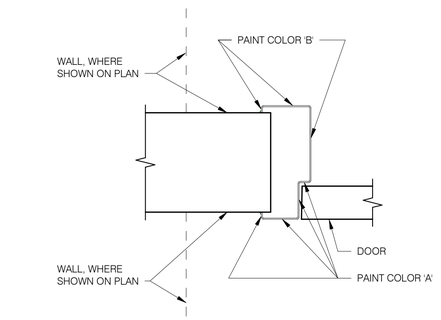

1 HOLLOW METAL FRAME PAINT SPLIT
3" = 1'-0"

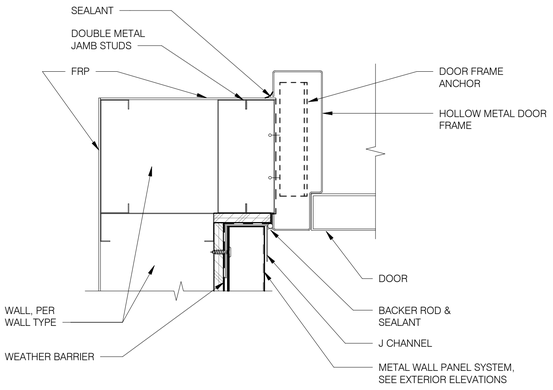

10 HOLLOW METAL JAMB AT HORIZONTAL METAL WALL PANELS
3" = 1'-0"

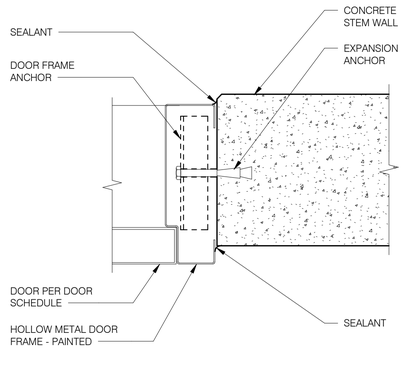

8 HOLLOW METAL JAMB AT CONCRETE STEM WALL
3" = 1'-0"

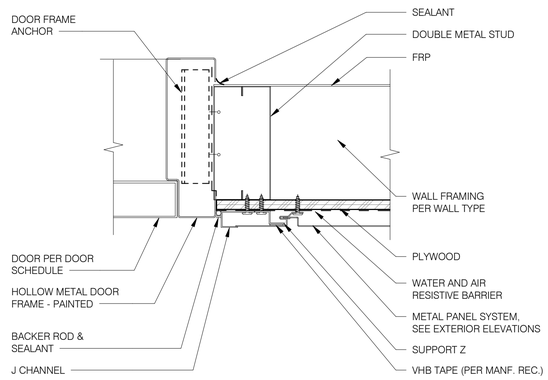

7 HOLLOW METAL JAMB AT VERTICAL METAL WALL PANELS
3" = 1'-0"

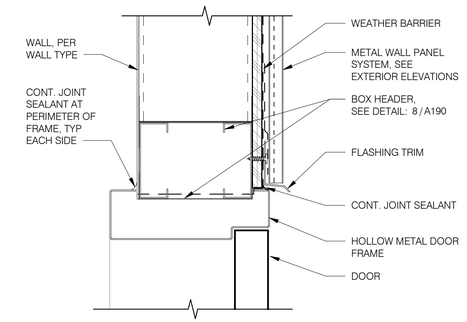

6 HOLLOW METAL HEAD AT VERTICAL METAL WALL PANELS
3" = 1'-0"

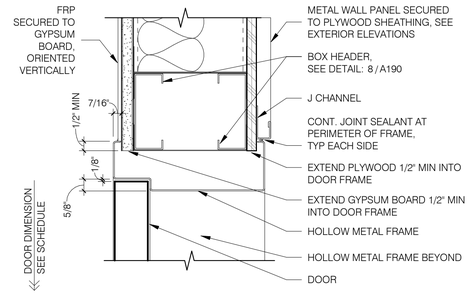

11 HOLLOW METAL HEAD AT EXTERIOR METAL STUD WALL
3" = 1'-0"

REGISTERED ARCHITECT
18924
Z. JAN E. LORANT
Date Signed 08/14/26
ARIZONA U.S.A.
EXPIRES 6/30/2027

Issue Date:	10 JULY 2026	
Revisions:	# Description	Date

gabor lorant architects
3326 n. 3rd avenue suite 200
phoenix, arizona 85013
tel: 602.667.9090
fax: 602.667.9133
gaborlorant.com
gla Project No.: 24102

ARIZONA DEPARTMENT OF TRANSPORTATION
PROJECT DELIVERY AND OPERATIONS DIVISION
PROJECT MANAGEMENT GROUP

SAN SIMON PORT OF ENTRY
DOOR DETAILS

ROUTE I-10
MILEPOST 383
STRUCTURE NO.

F.H.W.A. Arizona Division	STATE	PROJECT NO.	FEDERAL ID NO.	SHEET NO.	TOTAL SHEETS	RECORD DRAWING
	ARIZ.	010 CH 383	010-F(238)T	116	200	

LOCATION: SAN SIMON PORT OF ENTRY (POE)
DWG NO. **A810**
TRACS NO. F0728 01C
____ OF ____

9/22/2026 3:03:20 PM

DO NOT SCALE DRAWINGS. DO NOT PLOT 'SCALE TO FIT'. THIS DOCUMENT IS FORMATTED FOR THE ANSI D (22"x34") SHEET SIZE.
FULL-SIZE PLOT ON ANSI D (22"x34") PAPER ONLY. HALF-SIZE PLOT ON 11"x17" PAPER ONLY.

STAPLE ZONE

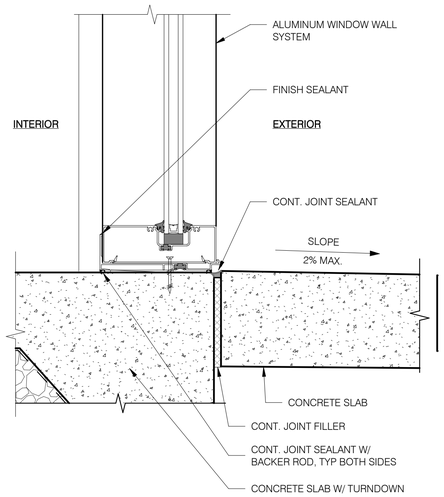

10 EXTR. 2" X 6" WINDOW WALL SILL AT CONC. SLAB EDGE
3" = 1'-0"

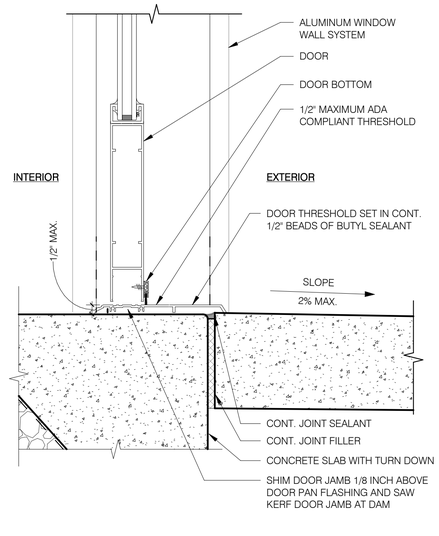

9 EXTR. 2" X 6" WINDOW WALL DOOR SILL AT CONC. SLAB EDGE
3" = 1'-0"

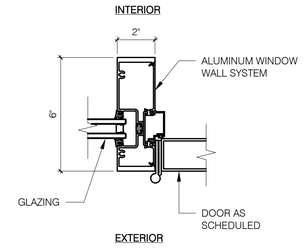

3 EXTR 2" X 6" WINDOW WALL DOOR JAMB MULLION HINGE SIDE
3" = 1'-0"

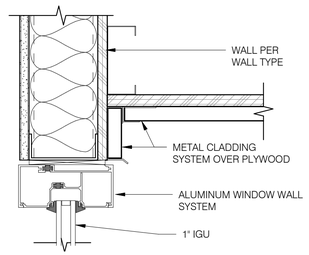

8 SOFFIT AT WINDOW WALL
3" = 1'-0"

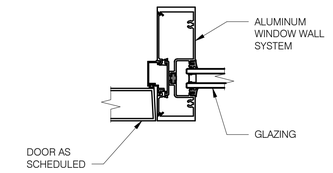

2 EXTR 2" X 6" WINDOW WALL DOOR JAMB MULLION
3" = 1'-0"

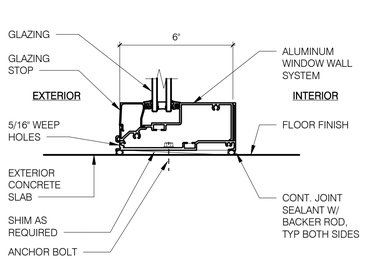

7 EXTR 2" X 6" WINDOW WALL SILL AT CONC. SLAB
3" = 1'-0"

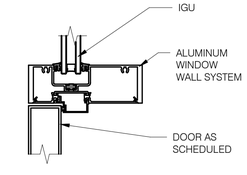

1 EXTR. 2" X 6" WINDOW WALL HEAD AT TRANSOM
3" = 1'-0"

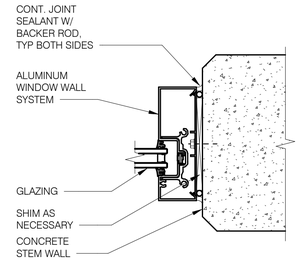

6 EXTR 2" X 6" WINDOW WALL JAMB AT CONC. STEM WALL
3" = 1'-0"

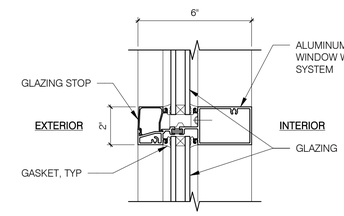

12 EXTR. 2" X 6" WINDOW WALL INTERMEDIATE HORIZ. MULLION
3" = 1'-0"

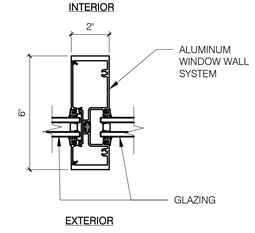

11 EXTR. 2" X 6" WINDOW WALL INTERMEDIATE VERT. MULLION
3" = 1'-0"

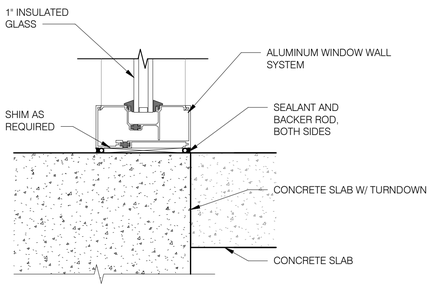

17 WINDOW WALL SILL
3" = 1'-0"

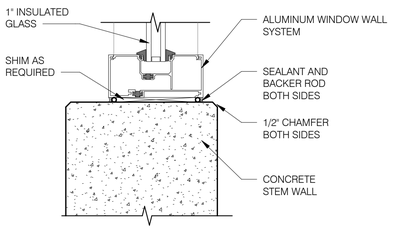

16 EXTR 2" X 6" WINDOW WALL SILL AT STEM WALL
3" = 1'-0"

18924
Z. JAN E.
LORANT
Date Signed 07/10/26
REGISTERED ARCHITECT
ARIZONA, U.S.A.
EXPIRES 6/30/2027

Issue Date:	10 JULY 2026	
Revisions:	# Description	Date

gabor lorant architects
3326 n. 3rd avenue suite 200
phoenix, arizona 85013
tel: 602.667.9090
fax: 602.667.9133
gaborlorant.com
gla Project No.: 24102

ARIZONA DEPARTMENT OF TRANSPORTATION
PROJECT DELIVERY AND OPERATIONS DIVISION
PROJECT MANAGEMENT GROUP

SAN SIMON PORT OF ENTRY
GLAZING SYSTEM DETAILS

ROUTE I-10
MILEPOST 383
STRUCTURE NO.

F.H.W.A. Arizona Division

STATE	PROJECT NO.	FEDERAL ID NO.	SHEET NO.	TOTAL SHEETS	RECORD DRAWING
ARIZ.	010 CH 383	010-F(238)T	117	200	

LOCATION: SAN SIMON PORT OF ENTRY (POE)

TRACS NO. F0728 01C

DWG NO. **A860**

___ OF ___

9/22/2026 3:03:20 PM

DO NOT SCALE DRAWINGS. DO NOT PLOT 'SCALE TO FIT'. THIS DOCUMENT IS FORMATTED FOR THE ANSI D (22"x34") SHEET SIZE.
FULL-SIZE PLOT ON ANSI D (22"x34") PAPER ONLY. HALF-SIZE PLOT ON 11"x17" PAPER ONLY.

STAPLE ZONE

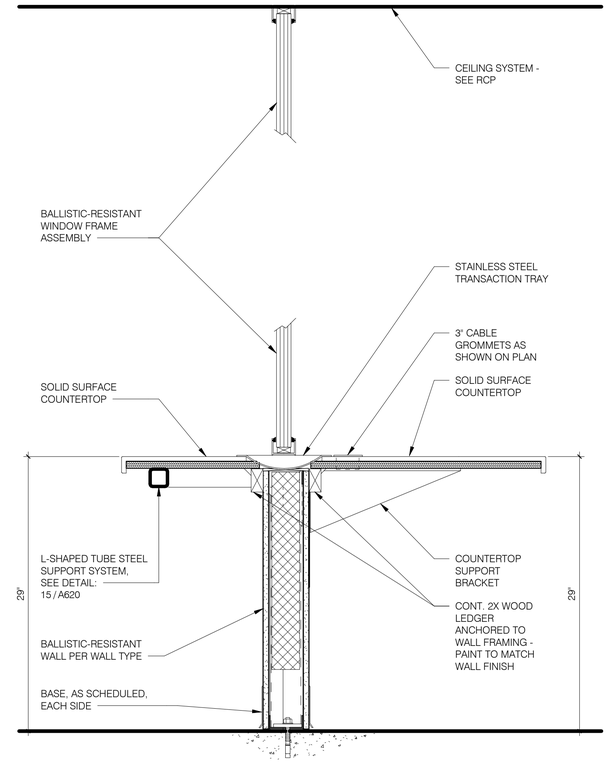

1 A860 BALLISTIC-RESISTANT WINDOW FRAME SILL AT TRANSACTION COUNTER
1 1/2" = 1'-0"

9/22/2026 3:03:20 PM



Issue Date:	10 JULY 2026		
Revisions:	#	Description	Date

gabor lorant architects
3326 n. 3rd avenue suite 200
phoenix, arizona 85013
tel: 602.667.9090
fax: 602.667.9133
gaborlorant.com

gla Project No.: 24102

gla

ARIZONA DEPARTMENT OF TRANSPORTATION
PROJECT DELIVERY AND OPERATIONS DIVISION
PROJECT MANAGEMENT GROUP

SAN SIMON PORT OF ENTRY
GLAZING SYSTEM DETAILS

ROUTE I-10
MILEPOST 383
STRUCTURE NO.

F.H.W.A. Arizona Division	STATE	PROJECT NO.	FEDERAL ID NO.	SHEET NO.	TOTAL SHEETS	RECORD DRAWING
	ARIZ.	010 CH 383	010-F(238)T	118	200	

LOCATION SAN SIMON PORT OF ENTRY (POE)

DWG NO. **A861**

TRACS NO. F0728 01C

___ OF ___

DO NOT SCALE DRAWINGS. DO NOT PLOT "SCALE TO FIT". THIS DOCUMENT IS FORMATTED FOR THE ANSI D (22"x34") SHEET SIZE.
FULL-SIZE PLOT ON ANSI D (22"x34") PAPER ONLY. HALF-SIZE PLOT ON 11"x17" PAPER ONLY.

STAPLE ZONE

GENERAL STRUCTURAL NOTES

APPLY UNLESS NOTED OTHERWISE

BUILDING CODE:

2018 EDITION OF THE INTERNATIONAL BUILDING CODE, WITH STATE OF ARIZONA AMENDMENTS.

LOADS:

ROOF LIVE LOAD = 20 PSF (REDUCIBLE).
TOTAL ROOF DEAD LOAD = 20 PSF.
STAIR LIVE LOAD = 100 PSF.

WIND:

THE STRUCTURE AND ITS COMPONENTS ARE DESIGNED FOR WIND LOADS AS DEFINED BY THE BUILDING CODE, WHERE:

BASIC WIND SPEED 115 MPH.
RISK CATEGORY: III.
WIND EXPOSURE: C.
INTERNAL PRESSURE COEFFICIENT (GCpi) = +– 0.18.

VELOCITY PRESSURE, qz = 26.3 PSF AT h = 21'–3" FT. (MEAN ROOF HEIGHT). DESIGN WIND PRESSURES COMPONENTS AND CLADDING:

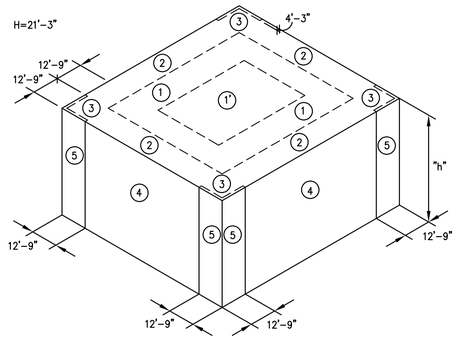

*PRESSURES SHOWN ARE ULTIMATE. MULTIPLY BY 0.6 FOR SERVICE LEVEL PRESSURES.

LOCATION	ZONE	EFFECTIVE WIND AREA (SF)	DESIGN WIND PRESSURE (PSF)*
ROOF	1'	10	+16.0 –28.4
		20	+16.0 –28.4
		50	+16.0 –28.4
		100	+16.0 –28.4
	1	10	+16.0 –49.4
		20	+16.0 –46.1
		50	+16.0 –41.8
		100	+16.0 –38.5
	2	10	+16.0 –65.1
		20	+16.0 –60.9
		50	+16.0 –55.4
		100	+16.0 –51.2
	3	10	+16.0 –88.7
		20	+16.0 –80.4
		50	+16.0 –69.3
		100	+16.0 –60.9
WALLS	4	10	+28.4 –30.7
		20	+27.1 –29.5
		50	+25.4 –27.8
		100	+24.2 –26.5
		500	+21.3 –23.6
	5	10	+28.4 –37.8
		20	+27.1 –35.3
		50	+25.4 –32.0
		100	+24.2 –29.5
		500	+21.3 –23.6
PARAPET	4	10	+86.9 –51.3
		50	+73.8 –45.3
		100	+68.2 –42.7
	5	10	+111.8 –58.6
		50	+88.2 –49.6
		100	+78.2 –45.7

ZONE1: INTERIOR AREA OF ROOF AWAY FROM BUILDING EXTERIOR WALLS.
ZONE2: ROOF AREAS WITHIN 12'–9" OF EXTERIOR WALLS.
ZONE3: ROOF AREAS WITHIN 12'–9" OF BUILDING CORNERS.
ZONE4: EXTERIOR WALLS AWAY FROM BUILDING CORNERS.
ZONE5: EXTERIOR WALLS WITHIN 12'–9" OF BUILDING CORNERS.
–DESIGN WIND PRESSURES – PLUS AND MINUS SIGNS SIGNIFY PRESSURE ACTING TOWARD AND AWAY FROM EXTERIOR SURFACE.
–LINEAR INTERPOLATION BETWEEN VALUES OF TRIBUTARY AREA IS PERMISSIBLE.

SHEET #	SHEET NAME	DETAIL NUMBERS
S000	GENERAL STRUCTURAL NOTES	
S001	GENERAL STRUCTURAL NOTES	
S002	GENERAL STRUCTURAL NOTES	
S100	FOUNDATION PLAN	
S101	ROOF FRAMING PLANS	
S110	FOUNDATION PLAN	
S111	FOUNDATION PLAN	
S112	FRAMING PLANS	
S200	FOUNDATION DETAILS	101 – 108
S201	FOUNDATION DETAILS	109 – 115
S202	FOUNDATION DETAILS	116 – 123
S203	FOUNDATION DETAILS	124 – 129
S204	FOUNDATION DETAILS	130 – 135
S205	FOUNDATION DETAILS	136
S300	FRAMING DETAILS	201 – 208
S301	FRAMING DETAILS	209 – 215
S302	FRAMING DETAILS	216 – 217
S400	BRACE FRAME DETAILS	301 – 303
S401	BRACE FRAME DETAILS	304 – 305
S500	TYPICAL DETAILS	01 – 07
S501	TYPICAL DETAILS	08 – 13
S502	TYPICAL DETAILS	14 – 21
S503	TYPICAL DETAILS	22 – 26
S504	TYPICAL DETAILS	27 – 28
S505	TYPICAL DETAILS	29 – 31

ENGINEER:	J.Appleyard
ENGINEER OF RECORD:	J.Appleyard
PROJECT MANAGER:	J.Appleyard
DRAWN BY:	PKA/A.Torrez
QA / QC REVIEW:	P. KUKLA

SEISMIC:

RISK CATEGORY = III.
Seismic Importance Factor: Ie = 1.25.
DESIGN CATEGORY = B.
SITE CLASS D.
Ss = 0.251, S1 = 0.79, R = 3.
Sds = 0.267, Sd1 = 0.127.
BASIC SEISMIC–FORCE–RESISTING SYSTEM (STEEL SYSTEMS NOT SPECIFICALLY DETAILED FOR SEISMIC RESISTANCE).
ANALYSIS PROCEDURE USED (EQUIVALENT LATERAL FORCE PROCEDURE).
Cs = 0.11 (FACTORED).
Vbase = 22.5" (FACTORED/WORKING STRESS).

FOUNDATIONS:

SOIL REPORT BY ETHOS ENGINEERING LLC.; JOB NO. 2024114; DATED AUG 8, 2025; SPREAD FOOTINGS SHALL BEAR ON FIRM, UNDISTURBED SOIL (CONTROLLED COMPACTED FILL). IN ACCORDANCE WITH THE ABOVE REPORT. BOTTOM OF FOOTING TO BE 2'–0" MINIMUM BELOW FINISHED GRADE. (THESE FOOTING DEPTHS ARE MINIMUMS AND THE CONTRACTOR SHALL COORDINATE WITH SOILS REPORT AND OTHER TRADES TO ENSURE THESE MINIMUMS ARE SUFFICIENT FOR THE WORK.) (COMPACTED FILL SHALL EXTEND 5'–0" BEYOND EACH EDGE OF FOOTING.) FINISHED GRADE IS DEFINED AS TOP OF SLAB FOR INTERIOR FOOTINGS AND LOWEST ADJACENT GRADE WITHIN 5 FEET FOR PERIMETER FOOTINGS. DESIGN SOIL BEARING VALUE = 2,500 PSF. FOUNDATION EXCAVATIONS SHALL BE INSPECTED BY SOILS ENGINEER PRIOR TO PLACEMENT OF CONCRETE.

CONCRETE:

MINIMUM 28 DAY STRENGTH 3,000 PSI EXCEPT AS FOLLOWS: (TYPE II, U.N.O.)

BEAMS, WALLS AND GRADE BEAMS ----------4,000 PSI
MILD SLABS ----------5,000 PSI
SLABS ON GRADE ----------3,000 PSI

MECHANICALLY VIBRATE ALL CONCRETE WHEN PLACED, EXCEPT THAT SLABS ON GRADE NEED BE VIBRATED ONLY AROUND UNDER–FLOOR DUCTS, ETC. MAXIMUM SLUMP 4 1/2" FOR CONCRETE WITHOUT PLASTICIZER. IF PLASTICIZER IS USED, A HIGHER FINAL SLUMP MAY BE ALLOWED UPON STRUCTURAL ENGINEER'S APPROVAL. CAST CLOSURE POUR AROUND COLUMNS AFTER COLUMN DEAD LOAD IS APPLIED. UNLESS APPROVED OTHERWISE IN WRITING BY THE ARCHITECT, ALL CONCRETE SLABS ON GRADE SHALL BE BOUND BY CONTROL JOINTS (KEYED OR SAW CUT), SUCH THAT THE ENCLOSED AREA DOES NOT EXCEED 225 SQUARE FEET. KEYED CONTROL JOINTS NEED ONLY OCCUR AT EXPOSED EDGES DURING POURING, ALL OTHER JOINTS MAY BE SAW CUT. CONTRACTOR SHALL SUBMIT PROPOSED LOCATIONS FOR APPROVAL PRIOR TO CONSTRUCTION.

CONTRACTOR SHALL REVIEW ARCHITECTURAL DRAWINGS AND SPECIFICATIONS FOR SPECIAL SLAB TREATMENTS AND VAPOR BARRIERS REQUIRED FOR FINISH FLOORING.

REINFORCING:

ASTM A615 (Fy = 60 KSI) DEFORMED BARS FOR ALL BARS. ALL GRADE 60 REINFORCING TO BE WELDED SHALL BE ASTM A706. WELDED WIRE FABRIC PER ASTM A185, WIRE PER ASTM A82. NO TACK WELDING OF REINFORCING BARS ALLOWED WITHOUT PRIOR REVIEW OF PROCEDURE WITH THE STRUCTURAL ENGINEER. LATEST ACI CODE AND DETAILING MANUAL APPLY. CLEAR CONCRETE COVERAGES AS FOLLOWS UNLESS NOTED OTHERWISE IN THE CONCRETE FIRE RATING TABLE:

CAST AGAINST AND PERMANENTLY EXPOSED TO EARTH ---------- 3"
EXPOSED TO EARTH OR WEATHER
#6 OR LARGER ---------- 2"
#5 AND SMALLER ---------- 1 1/2"
COLUMNS (TO TIES) ---------- 1 1/2"
BEAMS (TO STIRRUPS) ---------- 1 1/2"
FLAT SLAB ---------- 3/4"
ALL OTHER PER LATEST EDITION OF ACI 318.

LAP SPLICES IN CONCRETE:

LAP SPLICES, UNLESS NOTED OTHERWISE, SHALL BE CLASS "B" TENSION LAP SPLICES PER LATEST EDITION OF ACI 318. LAP SPLICES IN CONCRETE COLUMNS SHALL BE TENSION LAP SPLICES. STAGGER SPLICES A MINIMUM OF ONE LAP LENGTH. LAPS IN WELDED WIRE FABRIC SHALL BE MADE SO THAT THE OVERLAP, MEASURED BETWEEN OUTERMOST CROSS WIRES OF EACH FABRIC SHEET, IS NOT LESS THAN THE SPACING OF CROSS WIRES PLUS 2 INCHES. ALL WELDED WIRE FABRIC SHALL BE CHAIRED TO ENSURE PROPER CLEARANCES.

ALL SPLICE LOCATIONS SUBJECT TO APPROVAL BY THE STRUCTURAL ENGINEER. PROVIDE BENT CORNER BARS TO MATCH AND LAP WITH HORIZONTAL BARS AT ALL CORNERS AND INTERSECTIONS PER TYPICAL DETAILS. REINFORCING BAR SPACING GIVEN ARE MAXIMUM ON CENTERS. ALL BARS PER CRSI SPECIFICATIONS AND HANDBOOK. DOWEL ALL VERTICAL REINFORCING TO FOUNDATION WITH STANDARD 90–DEGREE HOOKS UNLESS NOTED OTHERWISE. SECURELY TIE ALL BARS IN LOCATION BEFORE PLACING CONCRETE. CONCRETE COLUMN DOWEL EMBEDMENT SHALL BE A TENSION LAP DOWEL WITH EMBEDMENT ACCORDING TO THE LATEST EDITION OF THE ACI 318.

ANCHOR BOLTS:

ALL ANCHOR BOLTS SHALL BE ASTM F1554 GRADE 36 U.N.O. – WHEN SPECIFIED ON PLAN, ALL ASTM F1554 GRADE ANCHOR BOLTS SHALL BE GRADE 55 (SUPPLEMENTAL GRADE REQUIREMENT 'S1' AT WELDABLE) ANCHOR BOLTS.

MAY BE BENT IN FIELD PER AISC REQUIREMENTS TO FIX DAMAGED ANCHOR BOLTS; FIELD BENT IS LIMITED TO 45° OR LESS. ANCHOR BOLTS CAN HAVE HEADED OR HOOKED BOLTS SHAPES. USE HEADED ANCHOR BOLTS WHERE ANCHOR BOLT SHAPE IS NOT SPECIFIED. ANCHOR BOLTS SHALL BE INSPECTED PER SPECIAL INSPECTION TABLE REQUIREMENTS.

DRYPACK:

DRYPACK SHALL BE 5,000 PSI NON–SHRINK GROUT, FIVE STAR OR EQUIVALENT. INSTALL DRYPACK UNDER BEARING PLATES BEFORE FRAMING MEMBER IS INSTALLED. AT COLUMNS, INSTALL DRYPACK UNDER BASEPLATES AFTER COLUMN HAS BEEN PLUMBED BUT PRIOR TO FLOOR OR ROOF INSTALLATION.

STRUCTURAL STEEL:

STEEL SECTIONS – MINIMUM GRADE AND STRENGTH

STEEL WIDE FLANGES = ASTM A992 (50KSI)
STEEL CHANNELS = ASTM A36 (36KSI)
STEEL ANGLES = ASTM A36 (36KSI)
STEEL COLUMN BASE PLATES = ASTM A572 (50KSI)
STEEL PLATES AT MOMENT FRAME AND BRACED FRAME CONNECTIONS = ASTM A572 (50KSI)
STEEL PLATES (MISCELLANEOUS) = ASTM A36 (36KSI)
STEEL HSS (RECTANGLE) = ASTM A500 (50KSI), GRADE C
STEEL HSS (ROUND) = ASTM A500 (46KSI), GRADE C
STEEL PIPES = ASTM A501 (36KSI) – OR – ASTM A53 (35KSI), TYPE E OR S

STRUCTURAL STEEL (CONTINUED):

NOTE: ALL 36KSI STEEL MAY BE SUBSTITUTED WITH 50KSI STEEL UNLESS NOTED OTHERWISE.

ALL CONSTRUCTION PER LATEST AISC HANDBOOK. ALL REFERENCE TO HEADED STUDS SHALL BE HIGH STRENGTH HEADED STUDS. ATTACHMENT OF HEADED STUDS SHALL CONFORM TO ALL REQUIREMENTS OF THE LATEST EDITION OF THE "RECOMMENDED PRACTICES FOR STUD WELDING" AND THE "STRUCTURAL WELDING CODE" PUBLISHED BY AWS. ALL BOLTS, ANCHOR BOLTS, EXPANSION BOLTS, ETC. SHALL BE INSTALLED WITH STEEL WASHERS AT FACE OF WOOD OR AT SLOTTED HOLES IN STEEL SECTIONS. ALL HIGH STRENGTH BOLTING SHALL BE INSPECTED BY AN INDEPENDENT TESTING LABORATORY. ALL WELDING SHALL BE PERFORMED BY WELDERS HOLDING VALID CERTIFICATES AND HAVING CURRENT EXPERIENCE IN THE TYPE OF WELD SHOWN ON THE DRAWINGS OR NOTES. CERTIFICATES SHALL BE THOSE ISSUED BY AN ACCEPTED TESTING AGENCY. ALL WELDING DONE BY E70 SERIES LOW HYDROGEN RODS UNLESS NOTED OTHERWISE. FOR GRADE 60 REINFORCING BARS, USE E90 SERIES. AT MOMENT CONNECTIONS, REMOVE ALL WELD BACKING AND RUN–OFF TABS AND BACKGOUGE TO SOUND WELD METAL. BACKWELD WITH A MINIMUM 5/16" FILLET. ALL WELDING PER LATEST AMERICAN WELDING SOCIETY STANDARDS, (EXCEPT STEEL JOISTS AND JOIST GIRDERS SHALL COMPLY WITH SJI STANDARDS). THESE DRAWINGS DO NOT DISTINGUISH BETWEEN SHOP AND FIELD WELDS; THE CONTRACTOR MAY SHOP WELD OR FIELD WELD AT HIS DISCRETION. SHOP WELDS AND FIELD WELDS SHALL BE SHOWN ON THE SHOP DRAWINGS SUBMITTED FOR REVIEW. ALL FULL (COMPLETE) PENETRATION WELDS SHALL BE TESTED AND CERTIFIED BY AN INDEPENDENT TESTING LABORATORY. WHEN STRUCTURAL STEEL IS FURNISHED TO A SPECIFIED MINIMUM YIELD POINT GREATER THAN 36 KSI, THE ASTM OR OTHER SPECIFICATION DESIGNATION SHALL BE INCLUDED NEAR THE ERECTION MARK ON EACH SHIPPING ASSEMBLY OR IMPORTANT CONSTRUCTION COMPONENT, OVER ANY SHOP COAT OF PAINT, PRIOR TO SHIPMENT FROM THE FABRICATOR'S PLANT. STRUCTURAL STEEL COMPONENTS, AND FASTENERS AT ALL EXTERIOR CONDITIONS SHALL BE GALVANIZED OR PROTECTED AGAINST CORROSION USING APPROVED METHOD PUBLISHED BY AISC OR ANSI. WELDS ON GALVANIZED STEEL SHALL FOLLOW AWS D–19.0 SPECIFICATIONS.

STRUCTURAL BOLTS:

ALL STRUCTURAL BOLTS SHALL BE ASTM F3125 GRADE A325 TYPE 1 AND SHALL BE INSTALLED AS BEARING–TYPE CONNECTIONS WITH THREADS INCLUDED IN SHEAR PLANE (I.E. A TYPE "N" CONNECTION) UNLESS NOTED OTHERWISE. USE A325 TYPE 3 BOLTS AT ALL CONNECTIONS EXPOSED TO WEATHERING. USE SC (SLIP CRITICAL) AT ALL MOMENT FRAMES AND BRACED FRAMES. USE ASTM A354 BOLTS WHERE THE BOLT LENGTH REQUIRED FOR THE CONNECTION EXCEEDS THE MINIMUM LENGTH OF AN A325 BOLT. BOLTS MAY BE TIGHTENED USING ANY AISC APPROVED METHOD. ALL STRUCTURAL BOLTING SHALL BE INSPECTED BY AN INDEPENDENT TESTING LABORATORY TO ENSURE BOLT TENSION.

STEEL DECKING:

ROOF DECK:

DECK SHALL BE 1 1/2" DEEP, 36" WIDE, 20 GAGE PAINTED WITH GALVANIZED (G60) FINISH UNLESS SPECIFIED OTHERWISE BY THE ARCHITECT. MINIMUM YIELD STRESS OF 50 KSI, WITH MINIMUM S = 0.237 IN3 AND I = 0.231 IN4 PER FOOT OF WIDTH. DECK SHALL BE ERECTED IN ACCORDANCE WITH MANUFACTURER'S RECOMMENDATIONS AS 3 SPAN MINIMUM AND SHALL BE ATTACHED FOR A MINIMUM DIAPHRAGM SHEAR CAPACITY OF 966 PLF USING THE FOLLOWING MINIMUM ATTACHMENTS:

WELD DECK TO SUPPORTING MEMBERS WITH 4 – 5/8" DIAMETER OR 3/8" X 1" PUDDLE WELDS PER SHEET AT ENDS, END LAPS AND AT INTERMEDIATE SUPPORTS, AND AT 12" O.C. AT PERIMETER BEAMS AND OPENING EDGES RUNNING PARALLEL TO THE DECK. SIDE SEAM ATTACHMENT SHALL BE VSC2 AT 12" O.C.

ALL WELDING SHALL BE PERFORMED BY WELDERS EXPERIENCED IN LIGHT GAGE STEEL DECK WORK. DECK WELDING MAY BE ACHIEVED WITH E60 SERIES LOW HYDROGEN RODS.

STEEL GRATING:

UNLESS NOTED OTHERWISE IN ARCHITECTURAL SPECIFICATIONS, USE PAINTED (GALVANIZED) STEEL GRATING WITH 2 1/2" X 3/16" BEARING BARS AT 1 3/16" O.C. AND CROSSBARS AT 4" O.C. GRATING SHALL BE ERECTED AND ATTACHED PER MANUFACTURER'S RECOMMENDATIONS.

COLD FORMED STRUCTURAL STEEL FRAMING:

ALL COLD–FORMED STEEL FRAMING SHALL BE FABRICATED AND ERECTED IN ACCORDANCE WITH MANUFACTURER'S RECOMMENDATIONS AND IN ACCORDANCE WITH THE LATEST EDITION OF "SPECIFICATIONS FOR THE DESIGN OF COLD–FORMED STEEL STRUCTURAL MEMBERS" BY THE AMERICAN IRON AND STEEL INSTITUTE.

STEEL FOR 14 AND 16 GAGE STUDS AND JOISTS, AND FOR ALL DIAGONAL TENSION STRAPS SHALL HAVE A MINIMUM YIELD STRENGTH OF 50 KSI. STEEL FOR ALL 18 AND 20 GAGE STUDS AND JOISTS, AND FOR ALL GAGES OF TRACK, ACCESSORIES AND BRIDGING SHALL HAVE A MINIMUM YIELD STRENGTH OF 33 KSI. STEEL SHALL BE GALVANIZED AT LOCATIONS EXPOSED TO WEATHER AND WHEREVER NOTED.

ALL STUD FRAMING (BOTH INTERIOR AND EXTERIOR) SHALL BE DESIGNED AND CONSTRUCTED TO ACCOMMODATE VERTICAL DEFLECTION OF THE STRUCTURE OF UP TO 1/2" LIVE LOAD DEFLECTION, UNLESS GREATER VALUE IS NOTED ON PLANS OR DETAILS. UTILIZE SLIP TRACK OR OTHER SIMILAR MEANS.

ALL STUDS SHALL BE SECURELY SEATED FOR FULL END BEARING ON TOP AND BOTTOM TRACK. UNLESS NOTED OTHERWISE, PROVIDE DOUBLE STUDS AT ALL JAMBS, CORNERS, INTERSECTIONS, BEAM BEARINGS AND JOIST BEARINGS. BRIDGING SHALL BE INSTALLED PER MANUFACTURER'S RECOMMENDATION WITH THE FOLLOWING MINIMUM REQUIREMENTS.

FOR WALLS WITH NO AXIAL LOAD, PROVIDE BRIDGING AT MID–HEIGHT FOR WALLS LESS THAN OR EQUAL TO 10'–0" HIGH, AND 5'–0" O.C. MAXIMUM FOR WALLS GREATER THAN 10'–0" HIGH. FOR AXIAL LOAD BEARING WALLS, PROVIDE BRIDGING EQUALLY SPACED AT 4'–0" MAXIMUM. IN ADDITION, BRIDGING SHALL BE PROVIDED AT ROOF LINES AND ELSEWHERE AS NOTED ON THE DRAWINGS. SOLID BLOCKING SHALL BE INSTALLED IN LIEU OF BRIDGING WHERE NOTED ON THE DRAWINGS.

STEEL STUD DETAILS AND GAGES DEPICTED ON STRUCTURAL DRAWINGS SHOW GENERAL STRUCTURAL REQUIREMENTS AND ARE FOR SCHEMATICS PURPOSE ONLY. THE CONTRACTOR SHALL BE REQUIRED TO SUBMIT COMPREHENSIVE DESIGN AND CALCULATIONS FOR ALL STEEL STUD WALLS. ANY ADDITIONAL FRAMING MATERIALS REQUIRED FOR COMPLETE DESIGN SHALL BE INCORPORATED IN COMPREHENSIVE DESIGN AND CALCULATIONS, INCLUDING BUT NOT LIMITED TO TUBE STEEL FRAMING FOR JAMBS, HEADERS, AND SILLS.

MEMBERS SHALL HAVE THE FOLLOWING MINIMUM PROPERTIES:

	SIZE	GAGE	Fy (KSI)	Sxx (in3)	Ixx (in4)
STUDS	6"	20	33	0.598	1.793
TRACKS	6"	16	50	0.843	2.611
BRACING	6"	20	33	0.598	1.793

PK ASSOCIATES, LLC
6900 E. Belleview Ave. Suite 200
Greenwood Village, CO 80111
Phone: (720) 799.1058
Email: cadd@pkastructural.com
Website: www.pkastructural.com
Proj Num: 25113

Registered Professional Engineer (Civil) CERTIFICATE NO. 70374 JAMES APPLEYARD Date Signed 6/19/26 ARIZONA, U.S.A.

gabor lorant architects
3326 n. 3rd avenue suite 200
phoenix, arizona 85013
tel: 602.667.9090
fax: 602.667.9133
gaborlorant.com
gla Project No.: 24102

Issue Date:	10 JULY 2026	
Revisions:	# Description	Date

ARIZONA DEPARTMENT OF TRANSPORTATION
PROJECT DELIVERY AND OPERATIONS DIVISION
PROJECT MANAGEMENT GROUP
SAN SIMON PORT OF ENTRY
GENERAL STRUCTURAL NOTES

ROUTE I-10
MILEPOST 383
STRUCTURE NO.

F.H.W.A Arizona Division

STATE	PROJECT NO.	FEDERAL ID NO.	SHEET NO.	TOTAL SHEETS	RECORD DRAWING
ARIZ.	010 CH 383	010-F(238)T	119	200	

LOCATION: SAN SIMON PORT OF ENTRY (POE)
TRACS NO. F0728 01 C
DWG NO. S000
___ OF ___

DO NOT SCALE DRAWINGS. DO NOT PLOT "SCALE TO FIT". THIS DOCUMENT IS FORMATTED FOR THE ANSI D (22"x34") SHEET SIZE.
FULL-SIZE PLOT ON ANSI D (22"x34") PAPER ONLY. HALF-SIZE PLOT ON 11"x17" PAPER ONLY.

STAPLE ZONE

GENERAL STRUCTURAL NOTES

APPLY UNLESS NOTED OTHERWISE

PLYWOOD:

ALL PLYWOOD SHALL BE APA "CDX" RATED SHEATHING OR BETTER AND SHALL BEAR THE STAMP OF AN APPROVED TESTING AGENCY. LAY UP PLYWOOD WITH FACE GRAIN PERPENDICULAR TO SUPPORTS. MAXIMUM MOISTURE CONTENT AT TIME OF INSTALLATION TO BE LESS THAN 16%. STAGGER JOINTS. WHERE SCREWS ARE INDICATED FOR WOOD TO WOOD ATTACHMENTS, USE WOOD SCREWS. ALL PLYWOOD SHALL BE OF THE FOLLOWING NOMINAL THICKNESS, SPAN/INDEX RATIO AND SHALL BE ATTACHED AS FOLLOWS UNLESS NOTED OTHERWISE:

USE	THICKNESS	SPAN/INDEX RATIO	EDGE ATTACHMENT	INTERMEDIATE ATTACHMENT
SHEAR WALL	7/16"	24/0	#12 TEK @ 4" O.C.	#12 TEK @ 12" O.C.

GENERAL:

ALL WELDING SHALL BE PERFORMED BY WELDERS EXPERIENCED IN LIGHT GAGE STRUCTURAL STEEL FRAMING WORK. DO NOT NOTCH FLANGES OF JOISTS OR STUDS. DOUBLE UP FLOOR JOISTS AND BLOCKING UNDER PARTITIONS. PROVIDE BLOCKING AT SUPPORTS OF ALL JOISTS. DOUBLE UP STUDS AT JAMBS AND AS REQUIRED UNDER BEAMS IN BEARING WALLS.

PERFORMANCE SPECIFICATION FOR ALTERNATIVE STAIR DESIGN:

STAIRS SHALL BE DESIGNED FOR SELF WEIGHT PLUS A LIVE LOAD EQUAL TO 100 PSF. CONTRACTOR SHALL SUBMIT SHOP DRAWINGS WITH DESIGN CALCULATIONS SEALED BY A REGISTERED ENGINEER FOR REVIEW PRIOR TO MANUFACTURE.

STEEL STAIRS:

REFER TO PROJECT SPECIFICATIONS, ARCHITECTURAL DRAWINGS AND STRUCTURAL DRAWINGS TO DETERMINE EXTENT OF STAIRS AND WHAT SHALL BE PROVIDED BY THE STAIR MANUFACTURER. STAIRS ARE TO FRAME INTO FLOOR BEAMS AND BUILDING COLUMNS ONLY. DO NOT CONNECT STAIRS TO ELEVATOR GUIDE RAIL SUPPORTS OR DIAGONAL BRACING. VERIFY ALL OTHER CONDITIONS WITH ARCHITECT PRIOR TO PROCEEDING. IF STAIR FRAMING RESULTS IN ECCENTRIC LOADING OF THE STRUCTURAL MEMBERS, STAIR MANUFACTURER SHALL PROVIDE BRACING OF STRUCTURAL MEMBERS. CONTRACTOR SHALL SUBMIT DETAILED SHOP DRAWINGS TO THE ARCHITECT/ENGINEER FOR REVIEW PRIOR TO FABRICATION.

LANDING PANS SHALL BE 12 GAGE MINIMUM. TREAD PANS SHALL BE 14 GAGE MINIMUM. CONCRETE FILL FOR TREADS UNDER 4'-0" IN LENGTH SHALL BE REINFORCED WITH 6 X 6 – W1.4 X W1.4 W.W.F CONCRETE FILL FOR TREADS GREATER THAN 4'-0" IN LENGTHS SHALL BE REINFORCED WITH #3 AT 12" o.c. FOR ACTUAL LANDING AND STAIR PAN CONFIGURATIONS, SEE ARCHITECTURAL DRAWINGS.

CONSTRUCTION JOINTS:

ALL CONSTRUCTION JOINTS IN WALLS SHALL BE KEYED IN ACCORDANCE WITH THE TYPICAL CONSTRUCTION JOINT DETAILS SHOWN ON THE STRUCTURAL DRAWINGS OR, AT THE CONTRACTOR'S OPTION, SHALL BE INTENTIONALLY ROUGHENED IN ACCORDANCE WITH THE FOLLOWING: THE SURFACE OF ROUGHENED JOINTS SHALL BE SAND BLASTED OR ROUGHENED WITH A CHIPPING HAMMER TO EXPOSE THE AGGREGATE EMBEDDED IN THE PREVIOUS POUR. THE EXPOSED AGGREGATE SHALL PROTRUDE A MINIMUM OF 1/4 INCH. ALL SURFACES OF CONSTRUCTION JOINTS SHALL BE CLEANED AND LAITANCE REMOVED. IMMEDIATELY BEFORE NEW CONCRETE IS PLACED, ALL CONSTRUCTION JOINTS SHALL BE WETTED AND STANDING WATER REMOVED. VERTICAL CONSTRUCTION JOINTS IN WALLS SHALL BE HELD TO A MAXIMUM SPACING OF 60'-0". ALL CONSTRUCTION JOINTS IN SLABS, JOISTS, BEAMS, AND GIRDERS SHALL BE OFFSET A DISTANCE EQUAL TO TWICE THE WIDTH OF THE BEAM.

ACCORDANCE WITH THE TYPICAL SLAB ON DECK CONSTRUCTION JOINT DETAIL SHOWN ON THE STRUCTURAL DRAWINGS. BEAMS AND GIRDERS HAVE BEEN DESIGNED ASSUMING THE CONSTRUCTION JOINTS TO BE LOCATED IN THE MIDDLE THIRD OF THE BEAM, GIRDER, OR SLAB SPAN. ALL CONSTRUCTION, CONTROL, AND ISOLATION JOINTS FOR SLABS ON GRADE SHALL BE IN ACCORDANCE WITH THE TYPICAL SLAB ON GRADE DETAILS. THE CONTRACTOR SHALL SUBMIT THE PROPOSED LOCATIONS OF CONSTRUCTION JOINTS TO THE ENGINEER FOR ACCEPTANCE BEFORE STARTING CONSTRUCTION.

ELECTRICAL CONDUIT IN CONCRETE SLABS:

ELECTRICAL CONDUIT SHALL BE RIGID STEEL CONDUIT OR FLEXIBLE PLASTIC CONDUIT. ALUMINUM CONDUIT IS PROHIBITED. CONDUIT WITH A MAXIMUM OUTSIDE DIAMETER OF 1/6 TIMES THE SLAB THICKNESS MAY BE EMBEDDED IN ONE LAYER AT THE MID-DEPTH OF SLABS. MINIMUM CLEAR DISTANCE BETWEEN CONDUITS SHALL BE 3 TIMES CONDUIT DIAMETER. CONDUIT SHALL BE FIRMLY CHAIRED AND TIED TO PREVENT DISPLACEMENT DURING POURING. PLACE #3 AT 12 INCHES O.C. ADDITIONAL REINFORCING ABOVE AND BELOW, PERPENDICULAR TO THE CONDUIT. THE ADDED REINFORCING SHALL EXTEND 1'-0" PAST THE CONDUIT ON BOTH SIDES. FOR CONDUIT PLACED IN SLABS ON METAL DECKING, CONDUIT SHALL RUN IN THE METAL DECK FLUTES PER THE TYPICAL CONDUIT IN SLAB ON METAL DECK DETAIL.

CONCRETE INSERTS:

THIN SLAB TYPE INSERTS SHALL BE GALVANIZED AND HAVE THE FOLLOWING MINIMUM WORKING LOADS(A 4:1 RATIO OF ULTIMATE TO WORKING VALUES IS ASSUMED):

BOLT DIAMETER	WORKING LOAD SHEAR	WORKING LOAD TENSION
1/2"	1,000 LBS.	650 LBS.
5/8"	1,250 LBS.	700 LBS.
3/4"	1,600 LBS.	850 LBS.

COIL LOOP INSERTS SHALL BE GALVANIZED AND HAVE THE FOLLOWING MINIMUM WORKING LOADS(A 3:1 RATIO OF ULTIMATE TO WORKING VALUES IS ASSUMED):

BOLT DIAMETER	WORKING LOAD SHEAR	WORKING LOAD TENSION
1/2"	2,200 LBS.	2,820 LBS.
5/8"	3,000 LBS.	3,620 LBS.
3/4"	3,100 LBS.	3,660 LBS.

THREADED COIL RODS, COIL NUTS, ETC., USED IN CONJUNCTION WITH CONCRETE INSERTS, SHALL HAVE A WORKING LOAD EQUAL TO OR GREATER THAN THE CORRESPONDING CONCRETE INSERT. CONTRACTOR SHALL SUBMIT MANUFACTURER'S SIZE AND STRENGTH DATA PRIOR TO CONSTRUCTION TO THE STRUCTURAL ENGINEER THRU THE ARCHITECT. VALUES LISTED ABOVE ARE FOR RICHMOND STRUCTURAL CONNECTION INSERTS.

EXPANSION AND SCREW ANCHORS:

USE STUD TYPE EXPANSION ANCHOR WITH A SINGLE PIECE WEDGE ONLY WHERE NOTED ON PLANS. IF USE IS REQUESTED FOR OTHER THAN WHERE NOTED CONTACT STRUCTURAL ENGINEER THROUGH ARCHITECT FOR APPROVAL.

CONTRACTOR SHALL SUBMIT MANUFACTURER'S SIZE AND STRENGTH DATA TO ENGINEER THROUGH ARCHITECT PRIOR TO CONSTRUCTION. INSTALL ALL BOLTS AS OUTLINED IN MANUFACTURER'S SPECIFICATIONS, UTILIZING PROPER SIZE AND TYPE OF DRILL, CLEANING HOLE, DRIVING AND TIGHTENING BOLT.

IN CONCRETE:

ANCHORS USED MUST HAVE ICC APPROVAL AND INCLUDE HILTI KWIK BOLT TZ2 (ESR-4266), AND SIMPSON STRONG BOLT-2 (ESR-3037), AND DEWALT POWER-STUD+SD2 (ESR-2502), AND SIMPSON TITEN HD (ESR-2713), HILTI KWIK HUS-EZ (ESR-3027), AND DEWALT SCREW-BOLT+ (ESR-3889) OR APPROVED EQUAL.

IN MASONRY:

ANCHORS USED MUST HAVE ICC APPROVAL AND INCLUDE HILTI KWIK BOLT 3 (ESR-1385), AND SIMPSON STRONG BOLT-2 (ES-240), DEWALT POWER-STUD+SD1 (ESR-2966), HILTI KWIK HUS-EZ (ESR-3056) AND SIMPSON TITEN HD (ESR-1056), AND DEWALT SCREW-BOLT+ (ESR-4042) OR APPROVED EQUAL.

EPOXY ANCHORS IN CONCRETE AND MASONRY:

INJECTABLE ADHESIVE SHALL BE USED FOR INSTALLATION OF REINFORCING STEEL DOWELS OR THREADED ANCHOR RODS AND INSERTS INTO NEW OR EXISTING CONCRETE OR SOLID GROUTED CONCRETE MASONRY UNITS ONLY WHERE SPECIFIED ON PLANS. IF USE IS REQUESTED FOR OTHER THAN WHERE NOTED CONTACT STRUCTURAL ENGINEER THROUGH ARCHITECT FOR APPROVAL. ADHESIVE SHALL BE FURNISHED IN SIDE BY SIDE PACKS WHICH KEEP COMPONENT A AND COMPONENT B SEPARATE. USE ONLY INJECTION TOOLS AND STATIC MIXING NOZZLES RECOMMENDED BY MANUFACTURER. MANUFACTURER'S INSTRUCTIONS SHALL BE FOLLOWED.

IN CONCRETE:

ANCHORS USED MUST HAVE I.C.C. APPROVAL IN CRACKED CONCRETE AND INCLUDE SIMPSON SET-3G (ESR-4057), HILTI HIT-RE500-V3 (ESR-3814), DEWALT PURE110+ (ESR-3298) OR APPROVED EQUIVALENT. THE USE OF ANY EPOXY ANCHOR MUST BE APPROVED BY THE ENGINEER OF RECORD PRIOR TO INSTALLATION.

IN MASONRY:

ANCHORS USED MUST HAVE ICC APPROVAL AND INCLUDE SIMPSON SET-3G (ESR-4844) AND HILTI HIT-HY 270 MAX (ESR-4143) AND DEWALT AC100+GOLD (ESR-3200) OR APPROVED EQUIVALENT. THE USE OF ANY EPOXY ANCHOR MUST BE APPROVED BY THE ENGINEER OR RECORD PRIOR TO INSTALLATION.

1. ADHESIVE ANCHORS INSTALLED IN HORIZONTAL TO VERTICALLY OVERHEAD ORIENTATION TO SUPPORT SUSTAINED TENSION LOADS SHALL BE DONE BY A CERTIFIED ADHESIVE ANCHOR INSTALLER (AAI) AS CERTIFIED THROUGH ACI (ACI 318-14 17.8.2.2) PROOF OF CURRENT CERTIFICATION SHALL BE SUBMITTED TO THE ENGINEER FOR APPROVAL PRIOR TO COMMENCEMENT OF INSTALLATION.
2. ADHESIVE ANCHORS MUST BE INSTALLED IN CONCRETE AGED A MINIMUM OF 21 DAYS (ACI 318-14 17.1.2).
3. THE REMOVAL AND RESETTING OF POST INSTALLED ANCHORS IS PROHIBITED.
4. PROVIDE SPECIAL INSPECTION FOR ALL MECHANICAL AND ADHESIVE ANCHORS PER THE APPLICABLE BUILDING CODE AND PER THE CURRENT ICC-ES REPORT (IBC 2018 TABLE 1705.3 TYPE 4, NOTE B).

STRUCTURAL FILL:

ALL FILL PLACED TO SUPPORT SLABS ON GRADE, BEHIND PERMANENT WALLS, AND AROUND ALL DRAINS SHALL CONSIST OF WELL GRADED, GRANULAR MATERIAL PER THE SPECIFICATIONS. SOILS FOR STRUCTURAL FILL SHALL BE APPROVED BY THE GEOTECHNICAL ENGINEER. STRUCTURAL FILL SHALL BE PLACED ON SOUND NATIVE MATERIAL. PROOF-ROLL CUT AREAS WHICH PROVIDE SUPPORT FOR PERMANENT STRUCTURES. AREAS WHICH ARE EXCESSIVELY YIELDING, AS DETERMINED BY THE CONTINUOUS OBSERVATION OF THE GEOTECHNICAL ENGINEER, SHALL BE OVEREXCAVATED AND REPLACED WITH STRUCTURAL FILL. STRUCTURAL FILL SHALL BE PLACED PER THE SPECIFICATION. USE LEAN CONCRETE FILL BELOW ALL PIPES EXISTING OUT OF BASEMENT WALL, FULL HEIGHT OF WALL. CONCRETE SHALL CONTAIN 2 SACKS OF CEMENT PER YARD.

LATERAL PRESSURE ON SUBGRADE WALLS:

THE DESIGN PRESSURES FOR SUBGRADE WALLS ARE BASED ON A "DRAINED" CONDITION. SEE CIVIL AND MECHANICAL DRAWINGS FOR SUBGRADE DRAINAGE SYSTEM. SEE GEOTECHNICAL REPORT FOR COMPACTION REQUIREMENTS AT SUBGRADE WALLS. SUBGRADE WALLS AND SUPPORTING SLABS SHALL HAVE ATTAINED THEIR FULL CONCRETE STRENGTH BEFORE PLACING ANY BACKFILL U.N.O. THE CONTRACTOR SHALL PROVIDE TEMPORARY BRACES FOR WALLS IF BACKFILL IS PLACED BEFORE WALLS AND SLABS ACHIEVE FULL CONCRETE STRENGTH.

NOTES ON CRACKING OF CONCRETE STRUCTURES:

CRACKING IS INHERENT TO THE MATERIAL PROPERTIES OF CONCRETE CONSTRUCTION (INCLUDING POST-TENSIONED CONCRETE STRUCTURES). WHILE EVERY EFFORT HAS BEEN MADE TO MINIMIZE THE EFFECTS OF UNSIGHTLY CRACKING, THE PRESENCE OF CRACKS ARE NORMAL AND UNAVOIDABLE. THE DESIGN OF THE CONCRETE STRUCTURAL ITEMS HAVE BEEN ANALYZED USING A "CRACKING SECTION." THE PRESENCE OF THE CRACKING SHOULD NOT BE CONSIDERED DETRIMENTAL TO THE STRUCTURE. CRACKS LARGER THAN 10 MILS SHALL BE FILLED AND SEALED WITH AN APPROVED CRACK FILLER TO PREVENT FUTURE DETERIORATION. ALLOWANCE SHALL BE MADE IN THE CONSTRUCTION BUDGET FOR SEALING OF SUCH CRACKS. IN SOME CASE, CRACKS DO NOT APPEAR UNTIL WELL AFTER CONSTRUCTION HAS BEEN COMPLETED. IT IS THE RESPONSIBILITY OF THE OWNER TO MAINTAIN THE STRUCTURE PROPERLY OVER THE LIFE OF THE STRUCTURE. CONCRETE CRACKS, SHOULD THEY OCCUR, SHALL BE FILLED AND SEALED TO PREVENT PREMATURE DETERIORATION OF THE STRUCTURE.

SHOP DRAWINGS:

SHOP DRAWINGS SHALL BE SUBMITTED FOR ALL STRUCTURAL ITEMS IN ADDITION TO ITEMS REQUIRED BY ARCHITECTURAL SPECIFICATIONS.

THE CONTRACTOR SHALL REVIEW ALL SHOP DRAWINGS PRIOR TO SUBMITTAL. ITEMS NOT IN ACCORDANCE WITH CONTRACT DOCUMENTS SHALL BE FLAGGED UPON HIS REVIEW.

VERIFY ALL DIMENSIONS WITH ARCHITECTURAL DRAWINGS AND ALL FINISHED GRADE WITH CIVIL DRAWINGS.

ANY CHANGES, SUBSTITUTIONS, OR DEVIATIONS FROM CONTRACT DOCUMENTS SHALL BE CLOUDED BY MANUFACTURER OR FABRICATOR. ANY OF THE AFOREMENTIONED WHICH ARE NOT CLOUDED OR FLAGGED BY SUBMITTING PARTIES, SHALL NOT BE CONSIDERED APPROVED AFTER ENGINEER'S REVIEW, UNLESS NOTED ACCORDINGLY.

SHOP DRAWINGS (CONTINUED):

THE ENGINEER HAS THE RIGHT TO APPROVE OR DISAPPROVE ANY CHANGES TO CONTRACT DOCUMENTS AT ANYTIME BEFORE OR AFTER SHOP DRAWING REVIEW.

THE SHOP DRAWINGS DO NOT REPLACE THE CONTRACT DOCUMENTS. ITEMS OMITTED OR SHOWN INCORRECTLY AND ARE NOT FLAGGED BY THE STRUCTURAL ENGINEER OR ARCHITECT ARE NOT TO BE CONSIDERED CHANGES TO CONTRACT DOCUMENTS. IT IS THE CONTRACTOR'S RESPONSIBILITY TO MAKE SURE ITEMS ARE CONSTRUCTED PER THE CONTRACT DOCUMENTS.

THE ADEQUACY OF ENGINEERING DESIGNS AND LAYOUT PERFORMED BY OTHERS RESTS WITH THE DESIGNING OR SUBMITTING AUTHORITY.

REVIEWING IS INTENDED ONLY AS AN AID TO THE CONTRACTOR IN OBTAINING CORRECT SHOP DRAWINGS. RESPONSIBILITY FOR CORRECTNESS SHALL REST WITH THE CONTRACTOR.

DEFERRED SUBMITTALS: (PER 2018 IBC 107.3.4.1)

FOR THE PURPOSES OF THIS SECTION, DEFERRED SUBMITTALS ARE DEFINED AS THOSE PORTIONS OF THE DESIGN WHICH ARE NOT SUBMITTED AT THE TIME OF THE APPLICATION AND THAT ARE TO BE SUBMITTED TO THE BUILDING OFFICIAL WITHIN A SPECIFIED PERIOD.

DOCUMENTS FOR DEFERRED SUBMITTAL ITEMS SHALL BE SUBMITTED TO THE PROFESSIONAL IN RESPONSIBLE CHARGE FOR REVIEW. THE CONTRACTOR SHALL FORWARD THE REVIEWED DOCUMENTS TO BUILDING OFFICAL WITH A NOTATION INDICATING THAT THE DEFERRED SUBMITTAL DOCUMENTS HAVE BEEN REVIEWED AND BEEN FOUND TO BE IN GENERAL CONFORMANCE TO THE DESIGN OF THE BUILDING. THE DEFERRED SUBMITTAL ITEMS SHALL NOT BE INSTALLED UNTIL THE DESIGN AND SUBMITTAL DOCUMENTS HAVE BEEN APPROVED BY THE BUILDING OFFICIAL.

DEFERRED SUBMITTAL ITEMS:

EXTERIOR CLADDING AND STEEL STUD FRAMING
NON-BEARING INTERIOR STUD PARTITION WALLS
EXCAVATION SHORING SYSTEMS
GUARDRAILS/HANDRAILS

GENERAL:

ENTIRE CONTRACT DOCUMENTS SHALL BE USED TO CONSTRUCT ALL BUILDINGS. SOME CRITICAL ITEMS REQUIRED BY OTHER DISCIPLINES MAY NOT BE SHOWN ON STRUCTURAL DRAWING (i.e. WALL, FLOOR AND ROOF OPENINGS, ARCHITECTURAL, MECHANICAL AND PLUMBING LOADS, SUPPORT PLATES ETC.)

ITEMS SHOWN BY OTHER DISCIPLINES WITH REFERENCE TO STRUCTURAL DRAWING BUT NOT SHOWN ON THESE STRUCTURAL DOCUMENTS SHALL BE CONSIDERED DESIGN BUILD ITEMS. CONTRACTOR SHALL SUBMIT DESIGN BY OTHERS FOR REVIEW.

THE STRUCTURAL CONSTRUCTION DOCUMENTS REPRESENT THE FINISHED STRUCTURE. THEY DO NOT INDICATE THE METHOD OF CONSTRUCTION. THE CONTRACTOR SHALL PROVIDE ALL MEASURES NECESSARY TO PROTECT THE STRUCTURE DURING CONSTRUCTION. SUCH MEASURES SHALL INCLUDE, BUT NOT BE LIMITED TO, BRACING, SHORING FOR LOADS DUE TO CONSTRUCTION EQUIPMENT, ETC. THE STRUCTURAL ENGINEER SHALL NOT BE RESPONSIBLE FOR THE CONTRACTOR'S MEANS, METHODS, TECHNIQUES, SEQUENCES FOR PROCEDURE OF CONSTRUCTION, OR THE SAFETY PRECAUTIONS AND THE PROGRAMS INCIDENT THERETO (NOR SHALL OBSERVATION VISITS TO THE SITE INCLUDE INSPECTION OF THESE ITEMS).

CONSTRUCTION MATERIALS SHALL BE SPREAD OUT IF PLACED ON FRAMED CONSTRUCTION. LOAD SHALL NOT EXCEED THE DESIGN LIVE LOAD PER SQUARE FOOT.

WHERE REFERENCE IS MADE TO VARIOUS TEST STANDARDS FOR MATERIALS, SUCH STANDARDS SHALL BE THE LATEST EDITION AND/OR ADDENDA.

ESTABLISH AND VERIFY ALL OPENINGS AND INSERTS FOR ARCHITECTURAL, MECHANICAL, PLUMBING AND ELECTRICAL WITH APPROPRIATE TRADES, DRAWINGS AND SUBCONTRACTORS PRIOR TO CONSTRUCTION.

OPTIONS ARE FOR CONTRACTOR'S CONVENIENCE. IF THE CONTRACTOR CHOOSES AN OPTION, THE CONTRACTOR SHALL BE RESPONSIBLE FOR ALL NECESSARY CHANGES AND SHALL COORDINATE ALL DETAILS.

NOTES AND DETAILS ON DRAWINGS SHALL TAKE PRECEDENCE OVER GENERAL STRUCTURAL NOTES AND TYPICAL DETAILS. WHERE NO DETAILS ARE SHOWN, CONSTRUCTION SHALL CONFORM TO SIMILAR WORK ON THE PROJECT.

ALL DIMENSIONS SHOWN (INCLUDING ELEVATIONS) ON STRUCTURAL DRAWINGS ARE TO ASSIST CONTRACTOR IN VERIFICATION. SCALING DIMENSIONS FROM DRAWINGS IS NOT PERMITTED. LOCATION OF ALL ITEMS SHALL BE DETERMINED BY DIMENSIONS OR NOTES ONLY; DO NOT USE GRAPHIC APPEARANCE TO ASSUME SPECIFIC LOCATIONS.

CONTRACTOR SHALL BE RESPONSIBLE FOR VERIFICATION OF ALL DIMENSIONS WITH ARCHITECTURAL AND FINISHED GRADE WITH CIVIL DRAWINGS PRIOR TO START OF CONSTRUCTION. RESOLVE ANY DISCREPANCY WITH THE ARCHITECT.

TYPICAL DETAILS MAY NOT NECESSARILY BE CUT ON PLANS, BUT APPLY UNLESS NOTED OTHERWISE.

WHERE DISCREPANCIES OCCUR BETWEEN PLANS, DETAILS, GENERAL STRUCTURAL NOTES AND SPECIFICATIONS, THE GREATER REQUIREMENTS SHALL GOVERN.

ANY ENGINEERING DESIGN, PROVIDED BY OTHERS AND SUBMITTED FOR REVIEW, SHALL BEAR THE SEAL OF AN ENGINEER REGISTERED IN THE STATE OF JURISDICTION.

SUPPLIER OF ENGINEERED STRUCTURAL COMPONENTS (i.e. STEEL JOISTS, STAIRS, PRECAST ITEMS) SHALL BE RESPONSIBLE FOR COMPLETE DESIGN AND SHALL USE ENTIRE CONTRACT DOCUMENTS TO INCLUDE ALL LOADS AND DETAIL REQUIREMENTS FROM ALL DISCIPLINES. SUPPLIER SHALL PROVIDE ADDITIONAL MATERIAL REQUIRED TO MEET ALL THEIR REQUIREMENTS FOR INSTALLATION (i.e. WIDER BEARING PLATES, SHIMS, ERECTION BOLTS ETC.).

STRUCTURAL STEEL SUPPLIER SHALL FURNISH BOLTS FOR OSHA CONNECTIONS (SEE DRAWINGS FOR DETAILS).

WALL SHORING SHALL BE INSTALLED PRIOR TO BACKFILLING BEHIND ALL BUILDING RETAINING WALLS, UNLESS ALL RESTRAINING SLABS ARE INSTALLED. USE HANDTAPPING ONLY WHEN WITHIN 8'-0", OR WITHIN HALF THE WALL HEIGHT OF BACKFILLED WALL.

CONTINUOUS FOUNDATION DRAIN PIPES (FRENCH DRAINS) OR WEEP HOLES SHALL BE PROVIDED BEHIND ALL BASEMENT WALLS AND ALL EXTERIOR RETAINING WALLS THAT RETAIN MORE THAN 3'-0" OF SOIL. WEEP HOLES WHERE USED SHALL BE 2" IN DIAMETER AT 6'-0" O.C. MAXIMUM.

BUILDING TOLERANCES:

STANDARD TOLERANCES SHALL BE BASED ON THE REQUIREMENTS OF THE AISC CODE OF STANDARD PRACTICE AND ACI 117, STANDARD SPECIFICATIONS FOR TOLERANCES FOR CONCRETE CONSTRUCTION AND MATERIALS.

EXISTING STRUCTURE:

EXISTING STRUCTURAL DIMENSIONS AND MEMBER SIZES ARE FOR REFERENCE ONLY. CONTRACTOR SHALL VERIFY ALL DIMENSIONS IN THE FIELD PRIOR TO FABRICATION. THE CONTRACTOR SHALL VERIFY THE ACTUAL CONFIGURATION OF EXISTING CONSTRUCTION AND THE CONDITION OF THE STRUCTURE BEFORE BEGINNING WORK. ANY DISCREPANCIES OR UNSOUND CONDITIONS SHALL BE REPORTED TO THE ARCHITECT FOR RESOLUTION BEFORE BEGINNING WORK. REFER TO ARCHITECTURAL PLANS FOR DIMENSIONS, EMBEDMENTS, AND OPENINGS NOT SHOWN. REFER TO MECHANICAL AND ELECTRICAL PLANS FOR DUCTS, PIPING, EMBEDMENTS, AND OPENINGS NOT SHOWN.

TEMPORARY SHORING AND BRACING MAY BE NECESSARY IN ORDER TO PERFORM THE NECESSARY STRUCTURAL MODIFICATIONS TO THE EXISTING STRUCTURE SHOWN ON THE STRUCTURAL AND ARCHITECTURAL PLANS AND DETAILS. THE CONTRACTOR MUST RETAIN A LICENSED STRUCTURAL ENGINEER WHO SHALL INVESTIGATE WHERE THIS TEMPORARY SHORING/BRACING IS REQUIRED, AND SHALL DESIGN THIS TEMPORARY SHORING/BRACING.

SEQUENCING CONSTRUCTION AND LATERAL STABILITY:

THE STRUCTURAL COMPONENTS BY THEMSELVES ARE A NON-SELF-SUPPORTING STRUCTURE. LATERAL FORCES DUE TO WIND, EARTHQUAKE, OR SOIL ARE CARRIED BY THE ROOF AND FLOOR DIAPHRAGMS TO THE LATERAL SYSTEM. CERTAIN ELEMENTS SHOWN ON OR LOCAL STABILITY OF OTHER ELEMENTS (SUCH AS BEAMS, COLUMNS, AND WALLS). IF, DUE TO SEQUENCING OF CONSTRUCTION, THESE STABILITY ELEMENTS ARE NOT IN PLACE, THE CONTRACTOR SHALL RETAIN A LICENSED STRUCTURAL ENGINEER WHO SHALL INVESTIGATE WHERE TEMPORARY SHORING/BRACING IS REQUIRED, AND SHALL DESIGN THIS TEMPORARY SHORING/BRACING. THE CONTRACTOR SHALL PROVIDE THIS SHORING/BRACING UNTIL THE REQUIRED STRUCTURAL ELEMENTS AND THEIR CONNECTIONS HAVE BEEN INSTALLED AND REACH THEIR FINAL DESIGN STRENGTHS.

MISCELLANEOUS:

REFER TO ARCHITECTURAL, MECHANICAL, ELECTRICAL, CIVIL, ELEVATOR, OR OTHER SPECIALTY ENGINEERING DRAWINGS FOR DIMENSIONS NOT SHOWN, INCLUDING BUT NOT LIMITED TO: SIZE AND LOCATION OF CURBS, EQUIPMENT HOUSEKEEPING PADS, WALL AND FLOOR OPENINGS, BLOCKOUTS, FLOOR DEPRESSIONS, SUMPS, DRAINS, ANCHOR BOLTS, EMBEDDED ITEMS, ARCHITECTURAL TREATMENT, ETC. CONTRACTOR SHALL VERIFY DIMENSIONS AND RESOLVE DISCREPANCIES OR CONFLICTS PRIOR TO CONSTRUCTION. WHERE SECTIONS ARE INDICATED ON THE PLAN BY A NUMBER AND A DRAWING NUMBER THUS, 1/S5.01, THE INDICATED SECTION (1) IS SHOWN ON STRUCTURAL DRAWING S5.01.

ALL WINDOW SYSTEMS SHALL BE DESIGNED TO ACCOMMODATE VERTICAL DEFLECTION OF THE STRUCTURE OF 1/2" MINIMUM LIVE LOAD DEFLECTION, UNLESS GREATER VALUE IS NOTED ON PLANS OR DETAILS.

FLOOR FLATNESS/LEVELNESS SHALL MEET ARCHITECTURAL SPECIFICATIONS (1/4" IN 10 FOOT MINIMUM LEVELNESS UNLESS TIGHTER REQUIREMENT IN SPECIFICATIONS) IN HEIGHT FOR ALL STRUCTURAL SYSTEMS. CONTRACTOR SHALL INCLUDE COST FOR LEVELING ALL FLOORS. FOR ESTIMATING PURPOSES ONLY, ASSUME 1/2" THICK LEVELING AGENT OVER 15% OF FLOOR AREA.

SPECIAL INSPECTION:

SEE "SPECIAL INSPECTIONS TABLE" THIS SHEET (ON SHEET S002).

FABRICATOR APPROVAL:

SPECIAL INSPECTIONS NOTED ABOVE APPLY TO SHOP FABRICATED ASSEMBLIES IN ADDITION TO ON-SITE WORK UNLESS THE FABRICATOR IS AN "APPROVED FABRICATOR" AS DEFINED IN 2018 IBC.

INSTRUCTIONS TO BIDDERS CONTINGENCIES:

1. UNDER NO CIRCUMSTANCES SHALL THESE DRAWINGS BE "FINAL BID" UNTIL THE PROJECT IS FULLY PERMITTED.
2. ALL PRELIMINARY PRICING EFFORTS SHALL BE CONSIDERED TO BE ESTIMATES ONLY AND SHALL INCLUDE THE NECESSARY CONTINGENCIES, ALLOWANCES, ALTERNATES, ETC. AS APPROPRIATE TO ACCOUNT FOR MODIFICATIONS AND ADDITIONS THAT WILL OCCUR TO THE DRAWINGS DURING THE FINALIZATION OF THE DESIGN AND PERMITTING.
3. THE OWNER OR CONTRACTOR SHALL UTILIZE THE FOLLOWING MINIMUM CONTINGENCIES FOR EACH OF THE STRUCTURAL ELEMENT COSTS TO BE USED AT THE SOLE DISCRETION OF THE STRUCTURAL ENGINEER:

CONSTRUCTION DOCUMENTS/FINAL BID 3% MINIMUM

ALL OF THE "FINAL BID" CONTINGENCIES NOT USED BY THE STRUCTURAL ENGINEER SHALL BE REFUNDED TO THE OWNER PRIOR TO THE CLOSEOUT OF THE PROJECT.
4. ANY MODIFICATIONS, DELETIONS OR ELIMINATIONS TO THE STRUCTURAL BIDDING AND CONTINGENCY REQUIREMENTS, WITHOUT THE CONSENT OF THE STRUCTURAL ENGINEER, SHALL AUTOMATICALLY INDEMNIFY THE STRUCTURAL ENGINEER OF ANY COSTS THAT MAY ARISE DURING THE DESIGN AND CONSTRUCTION OF THE PROJECT.
5. WHERE DISCREPANCIES OCCUR WITHIN THE DRAWINGS THE CONTRACTOR WILL EITHER RESOLVE THE DISCREPANCIES WITH THE ARCHITECT BEFORE BIDDING OR INCLUDE THE GREATER COST ITEM IN THE BID AND RESOLVE THE DISCREPANCY PRIOR TO CONSTRUCTION.

NOTE TO CONTRACTOR REGARDING PROGRESS CONSTRUCTION DRAWINGS:

THESE DRAWINGS HAVE BEEN PREPARED FOR PROGRESS REVIEW AND COORDINATION ONLY, AND ARE NOT INTENDED FOR FINAL PRICING, BID, OR GMP. ANY BUDGET PRICING BASED ON THESE PROGRESS DRAWINGS SHALL INCLUDE A DESIGN ALLOWANCE SUFFICIENT TO COVER THE COMPLETION OF THE STRUCTURAL DESIGN AND CONSTRUCTION DRAWINGS. ALL STRUCTURAL ITEMS SHOWN HEREIN ARE SUBJECT TO CHANGE AS THE DESIGN PROGRESSES, AND SHALL BE ALLOWED FOR WITHIN THE BUDGET. IN ADDITION, MISCELLANEOUS STEEL ITEMS MAY NOT BE SHOWN UNTIL FINAL CONSTRUCTION DOCUMENTS ARE ISSUED. THESE ITEMS INCLUDE, BUT ARE NOT LIMITED TO, ARCHITECTURAL ACCENTS AND CANOPIES, EDGE ANGLES, BRACING, CLADDING, CLADDING SUPPORT STEEL, EQUIPMENT SUPPORTS, BLOCKOUTS, ELEVATOR STEEL, STAIRS, EMBED PLATES, SPECIAL CONNECTIONS, ETC. REFER TO ARCHITECTURAL, MECHANICAL, ELECTRICAL, AND OTHER SPECIALTY DRAWINGS FOR ADDITIONAL INFORMATION. IF ANY OF THE ABOVE IS NOT CLEAR, PLEASE CONTACT OUR OFFICE FOR FURTHER CLARIFICATION OF THE DESIGN INTENT.

PK ASSOCIATES, LLC
6900 E. Belleview Ave. Suite 200
Greenwood Village, CO 80111
Phone: (720) 799.1058
Email: cadd@pkastructural.com
Website: www.pkastructural.com
Proj Num: 25113

Registered Professional Engineer (Civil) CERTIFICATE NO. 70374 JAMES APPLEYARD Date Signed 6/30/26 ARIZONA, U.S.A.

Issue Date:	10 JULY 2026		
Revisions:	1 Description	Date	

gabor lorant architects
3326 n. 3rd avenue suite 200
phoenix, arizona 85013
tel: 602.667.9090
fax: 602.667.9133
gaborlorant.com

gla Project No.: 24102

gla

ARIZONA DEPARTMENT OF TRANSPORTATION
PROJECT DELIVERY AND OPERATIONS DIVISION
PROJECT MANAGEMENT GROUP

SAN SIMON PORT OF ENTRY
GENERAL STRUCTURAL NOTES

ROUTE I-10	F.H.W.A Arizona Division	STATE ARIZ.	PROJECT NO. 010 CH 383	FEDERAL ID NO. 010-F(238)T

DO NOT SCALE DRAWINGS. DO NOT PLOT "SCALE TO FIT". THIS DOCUMENT IS FORMATTED FOR THE ANSI D (22"x34") SHEET SIZE.
FULL-SIZE PLOT ON ANSI D (22"x34") PAPER ONLY. HALF-SIZE PLOT ON 11"x17" PAPER ONLY.

STAPLE ZONE

GENERAL STRUCTURAL NOTES

APPLY UNLESS NOTED OTHERWISE

CONTRACTOR RESPONSIBILITY:

EACH CONTRACTOR OR SUB-CONTRACTOR RESPONSIBLE FOR THE CONSTRUCTION OF THE WIND AND/OR SEISMIC RESISTING SYSTEM THAT IS LISTED IN THE STATEMENT OF SPECIAL INSPECTIONS SHALL SUBMIT A WRITTEN STATEMENT OF RESPONSIBILITY TO THE BUILDING OFFICIAL AND THE OWNER PRIOR TO THE COMMENCEMENT OF WORK REQUIRING SPECIAL INSPECTION. THE CONTRACTOR'S STATEMENT OF RESPONSIBILITY SHALL CONTAIN ACKNOWLEDGMENT OF AWARENESS OF THE SPECIAL REQUIREMENTS CONTAINED IN THE STATEMENT OF SPECIAL INSPECTIONS.

SPECIAL INSPECTION:

PER IBC CHAPTER 17, SPECIAL INSPECTION IS REQUIRED FOR THE FOLLOWING ITEMS:

CONCRETE: VERIFICATION AND INSPECTION	CONTINUOUS	PERIODIC	REFERRENCED STANDARD (NOTE 1)	IBC REFERENCE
1. Inspect reinforcement, including prestressing tendons, and verify placement.	–	X	ACI 318: Ch. 20, 25.2 25.3, 26.6.1–26.6.3	1908.4
2. Reinforcing bar welding: a. Verify weldability of reinforcing bars other than ASTM A706; b. Inspect single-pass fillet welds, maximum 5/16; and c. Inspect all other welds.	– X	X X 	AWS D1.4 ACI 318: 26.6.4	---
3. Inspect anchors cast in concrete.	–	–	ACI 318: 17.8.2	---
4. Inspect anchors post-installed in hardened concrete members. a. Adhesive anchors installed in horizontally or upwardly inclined orientations to resist sustained tension loads. b. Mechanical anchors and adhesive anchors not defined in 4.a.	X 	 X	ACI 318: 17.8.2.4 ACI 318: 17.8.2	---
5. Verifying use of required design mix.	–	X	ACI318: Ch. 19, 26.4.3, 26.4.4	1904.1, 1904.2 1908.2, 1908.3
6. Prior to concrete placement, fabricate specimens for strength tests, perform slump and air content tests, and determine the temperature of the concrete.	X	–	ASTM C172 ASTM C31 ACI 318: 26.4, 26.12	1908.10
7. Inspect concrete and shotcrete placement for proper application techniques.	X	–	ACI 318: 26.5	1908.6, 1908.7, 1908.8
8. Verify maintenance of specified curing temperature and techniques.	–	X	ACI 318: 26.5.3–26.5.5	1908.9
9. Inspect prestressed concrete for: a. Application of prestressing forces; and b. Grouting of bonded prestressing tendons	X X	– –	ACI 318: 26.10	--- ---
10. Inspect erection of precast concrete members.	–	X	ACI 318: Ch. 26.9	---
11. Verification of in-situ concrete strength, prior to stressing of tendons in post-tensioned concrete and prior to removal of shores and forms from beams and structural slab.	–	X	ACI 318: 26.11.2	---
12. Inspect formwork for shape, location and dimensions of the concrete member being formed.	–	X	ACI 318: 26.11.1.2(b)	---

NOTES:
1. WHERE APPLICABLE, SEE ALSO SECTION 1705.12, SPECIAL INSPECTIONS FOR SEISMIC RESISTANCE.
2. SPECIFIC REQUIREMENTS FOR SPECIAL INSPECTIONS SHALL BE INCLUDED IN THE RESEARCH REPORT FOR THE ANCHR ISSUED BY AN APPROVED SOURCE IN ACCORDANCE WITH 17.8.2 IN ACI318, OR OTHER QUALIFICATION PROCEDURES. WHERE SPECIFIC REQUIREMENTS ARE NOT PROVIDED, SPECIAL INSPECTION REQUIREMENTS SHALL BE SPECIFIED BY THE REGISTERED DESIGN PROFESSIONAL AND SHALL BE APPROVED BY THE BUILDING OFFICIAL PRIOR TO THE COMMENCEMENT OF WORK.

MASONRY LEVEL 2 INSPECTION TASK	CONTINUOUS DURING TASK LISTED	PERIODICALLY DURING TASK LISTED	ACI 530/ASCE 5/TMS 402 (NOTE 1)	ACI 530.1/ASCE 6/TMS 602 (NOTE 1)	IBC REFERENCE
1. As masonry construction begins, the following shall be verified to ensure compliance: a. Proportions of site-prepared mortar. b. Constructin of mortar joints. c. Location of reinforcement, connectors,	 – –	 X X		 ART. 2.6A ART. 3.3B ART. 3.4,3.6A	
2. The inspection program shall verify: a. Size and location of structural elements. b. Type, size and location of anchors including other details of anchorage of masonry to structural members, frames or other construction. c. Specified size, grade and type of reinforcement. d. Welding of reinforcing bars. e. Protection of masonry during cold weather	 – – X –	 X X – X	 SEC.1.2.2(e), 2.1.4,3.1.6 SEC. 1.13 SEC. 2.1.10.7.2, 3.3.3.4(b)	ART. 3.3G ART. 2.4,3.4 ART. 1.8C, ART. 1.8D	 2104.4 SEC. 2104.3,
3. Prior to grouting, the following shall be verified to ensure compliance: a. Grout space is clean. b. Placement of reinforcement and connectors c. Proportions of site-prepared grout and d. Construction of mortar joints.	 – –	 X X	SEC. 1.13	ART. 3.2D ART. 3.4 ART. 2.6B	
4. Grout placement shall be verified to ensure compliance with code and construction document provisions. a. Grouting of prestressing bonded tendons.	X	– –		ART. 3.5	
5. Preparation of any required grout specimens, Mortar specimens &/or prisms shall be observed.	X	–	SEC. 2105.2.2, 2105.3	ART. 1.4	
6. Compliance with required inspection provisions of the construction documents and the approved submittal shall be verified.	–	X		ART. 1.5	

NOTES:
1. THE SPECIFIC STANDARDS ARE THOSE LISTED IN CHAPTER 35
2. TABLES TAKEN DIRECTLY FROM IBC FOR REFERENCE.

STEEL: VERIFICATION AND INSPECTION	CONTINUOUS	PERIODIC	REFERENCED STANDARD (NOTE1)	IBC REFERENCE
1. Material verification of high-strength bolts, nuts and washers: a. Identification markings to conform to ASTM standards specified in the approved construction documents. b. Manufacturer's certificate of compliance required.	– –	X X	APPLICABLE ASTM MATERIAL SPECS AISC 360, SEC. A3.3	
2. Inspection of high-strength bolting: a. Bearing-type connections. AISC 360, Section M2.5 1704.3.3	–	X		
3. Material verification of structural steel: a. Identification markings to conform to ASTM standards specified in the approved construction documents. b. Manufacturer's certified mill test reports.	 –	 –	AISC 360, SEC. M2.5 ASTM A 6 OR ASTM A 568	
4. Material verification of weld filler materials: a. Identification markings to conform to ASTM standards specified in the approved construction documents. b. Manufacturer's certificate of compliance required.	– –	– –	AISC 360, SEC. A3.5	
5. Inspection of welding: a. Structural steel: 1) Complete and partial penetration groove welds. 2) Multipass fillet welds. 3) Single-pass fillet welds > 5/16" 4) Single-pass fillet welds = 5/16" 5) Floor and roof deck welds. b. Reinforcing steel: 1) Verification of weld ability of reinforcing steel other than ASTM A706. 2) Reinforcing steel-resisting flexural and axial forces in intermediate and special moment frames, and boundary elements of special reinforced concrete shear walls and shear reinforcement. 4) Other reinforcing steel.	– X X – – – – X X –	– – – X X – X – – X	AWS D1.1 AWS D1.1 AWS D1.1 AWS D1.1 AWS D1.3 AWS D1.4 ACI 318: 3.5.2	
6. Inspection of steel frame joint details for compliance with approved construction documents: a. Details such as bracing and stiffening. b. Member locations. c. Application of joint details at each connection.	– – – –	X – – –		

NOTES:
1. WHERE APPLICABLE SEE ALSO SECTION 1701.1, SPECIAL INSPECTION FOR SEISMIC RESISTANCE.
2. TABLES TAKEN DIRECTLY FROM IBC FOR REFERENCE.

STEEL: CONSTRUCTION OTHER THAN STRUCTURAL STEEL: VERIFICATION AND INSPECTION	CONTINUOUS	PERIODIC	REFERENCED STANDARD (NOTE1)	IBC REFERENCE
1. Material verification of cold-formed steel deck: a. Identification markings to conform to ASTM standards specified in the approved construction documents. b. Manufacturer's certified test reports	 – –	 X X	APPLICABLE ASTM MATERIAL STANDARDS	
2. Inspection of welding: a. Cold formed steel deck: 1) Floor and roof deck welds. b. Reinforcing steel: 1) Verification of weldability of reinforcing steel other than ASTM A706. 2) Reinforcing steel resisting flexural and axial forces in intermediate and special moment frames, and boundary elements of special structural walls of concrete and shear reinforcement. 3) Shear reinforcement. 4) Other reinforcing steel. Not the responsibility of the structural engineer. Special inspection certificate to be completed by geotechnical engineer.	 – – X – X	 X X – X –	 AWS D1.3 ACI 318: 3.5.2 AWS D1.4	

SOILS:				
1. Verify materials below shallow foundations are adequate to achieve the design bearing apacity.	–	X		
2. Verify excavations are extended to proper depth and have reached proper material.	–	X		
3. Perform classification and testing of compacted fill materials.	–	X		
4. Verify use of proper materials, densities and lift thicknesses during placement and compaction of compacted fill.	X	–		
5. Prior to placement of compacted fill, inspect subgrade and verify that site has been properly prepared.	–	X		
EXPANSION, SCREW, AND EPOXY BOLTS:				
1. During placemet of all expansion, screw, & epoxy bolts, for visual verification of hole diameter and depth and placement of bolt and/or epoxy.	–	X		

DUTIES AND RESPONSIBILITIES OF THE SPECIAL INSPECTOR:

A) THE SPECIAL INSPECTOR SHALL OBSERVE THE WORK ASSIGNED TO BE CERTAIN IT CONFORMS WITH THE APPROVED DESIGN DRAWINGS AND SPECIFICATION.

B) THE SPECIAL INSPECTOR SHALL FURNISH INSPECTION REPORTS TO THE BUILDING OFFICIAL, AND TO THE ENGINEER.

C) UPON COMPLETION OF THE ASSIGNED WORK THE ENGINEER OR ARCHITECT SHALL COMPLETE AND SIGN THE APPROPRIATE FORMS CERTIFYING THAT TO THE BEST OF HIS KNOWLEDGE THE WORK IS IN CONFORMANCE WITH THE APPROVED PLANS AND SPECIFICATIONS AND THE APPLICABLE WORKMANSHIP PROVISIONS OF THE CODE.

PK ASSOCIATES, LLC
6900 E. Belleview Ave. Suite 200
Greenwood Village, CO 80111
Phone: (720) 799.1058
Email: cadd@pkastructural.com
Website: www.pkastructural.com
Proj Num: 25113

Registered Professional Engineer (Civil) CERTIFICATE NO. 70374 JAMES APPLEYARD Date Signed 9/1/26 ARIZONA, U.S.A.

Issue Date:	10 JULY 2026	
Revisions:	# Description	Date

gabor lorant architects
3326 n. 3rd avenue suite 200
phoenix, arizona 85013
tel: 602.667.9090
fax: 602.667.9133
gaborlorant.com
gla Project No.: 24102

ARIZONA DEPARTMENT OF TRANSPORTATION
PROJECT DELIVERY AND OPERATIONS DIVISION
PROJECT MANAGEMENT GROUP

SAN SIMON PORT OF ENTRY
GENERAL STRUCTURAL NOTES

ROUTE I-10 | MILEPOST 383 | STRUCTURE NO.

F.H.W.A Arizona Division

STATE	PROJECT NO.	FEDERAL ID NO.	SHEET NO.	TOTAL SHEETS	RECORD DRAWING
ARIZ.	010 CH 383	010-F(238)T	121	200	

LOCATION: SAN SIMON PORT OF ENTRY (POE)

TRACS NO. F0728 01 C

DWG NO. **S002**

___ OF ___

DO NOT SCALE DRAWINGS. DO NOT PLOT 'SCALE TO FIT'. THIS DOCUMENT IS FORMATTED FOR THE ANSI D (22"x34") SHEET SIZE.
FULL-SIZE PLOT ON ANSI D (22"x34") PAPER ONLY. HALF-SIZE PLOT ON 11"x17" PAPER ONLY.

STAPLE ZONE

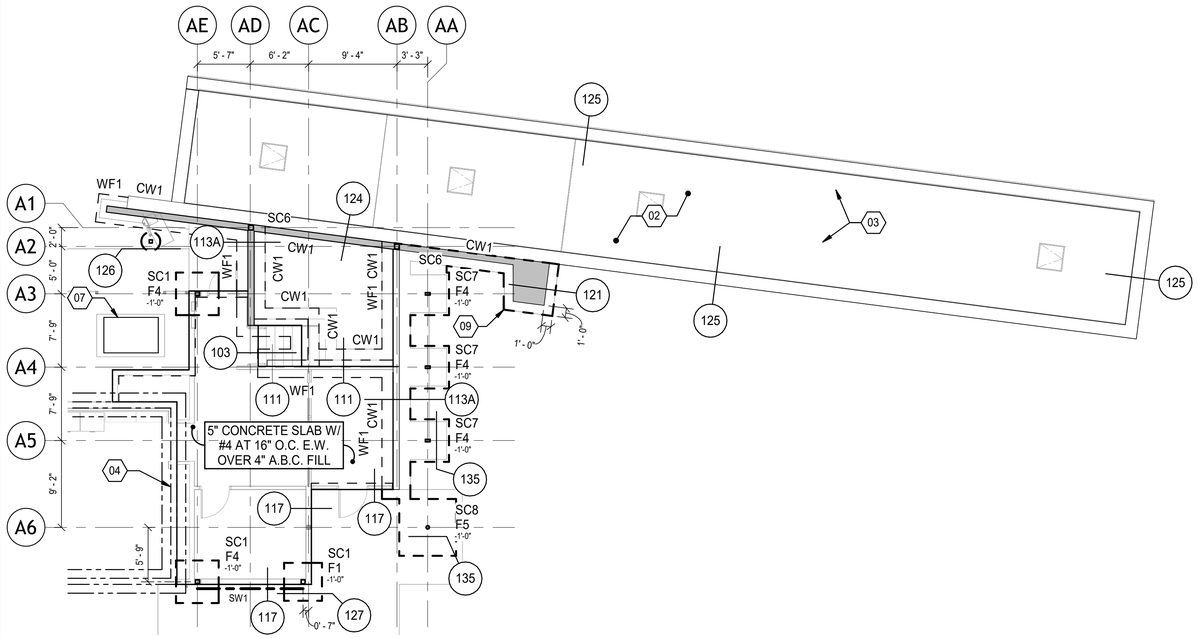

2 Admin Building Expansion Foundation Plan
1/8" = 1'-0"

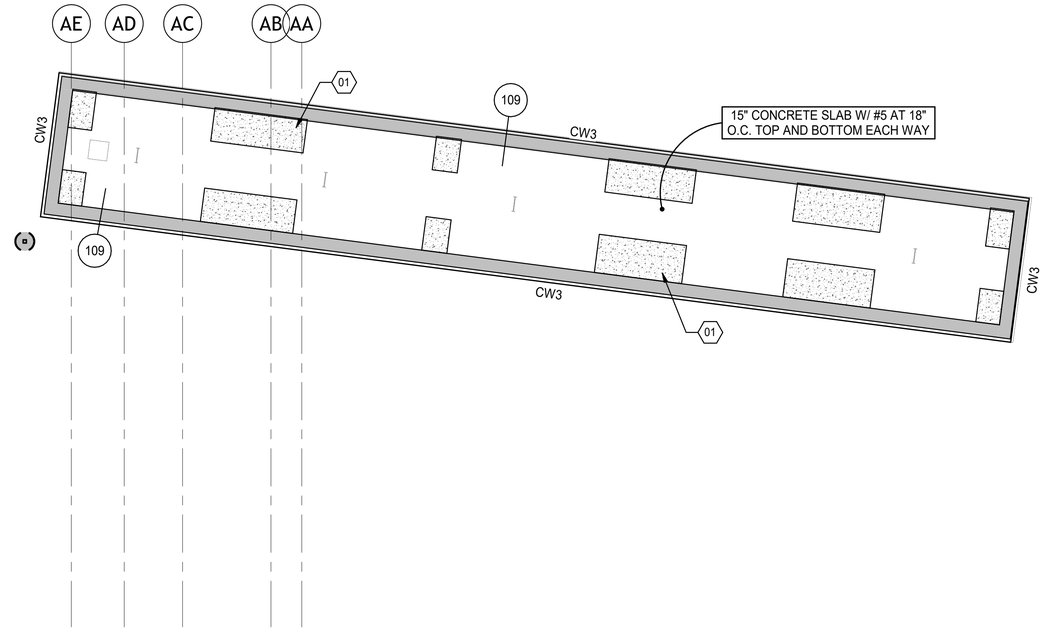

1 Weigh Scale Foundation Plan
1/8" = 1'-0"

CONCRETE WALL (CW) SCHEDULE

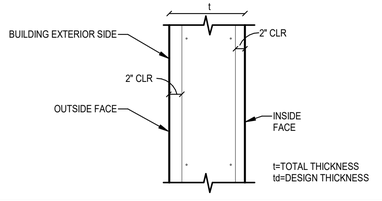

MARK	t	VERTICAL REINF.		HORIZONTAL REINF.		REMARKS
		INSIDE FACE	OUTSIDE FACE	INSIDE FACE	OUTSIDE FACE	
CW1	8"	#5@12"	---	#5@12"	---	---
CW3	16"	#5@12"	#5@12"	#5@12"	#5@12"	---
CW4	26"	#5@12"	#5@12"	#5@12"	#5@12"	---

STEEL COLUMN (SC) SCHEDULE

NOTE: FOR ANCHOR BOLT PATTERN, SEE TYPICAL DETAIL

MARK	SIZE	BASE CONNECTION	REMARKS
SC1	HSS5X5X1/2	3/4"x12"x12" STEEL PLATE W/ 4- 3/4" DIA. GR36 F1554 ANCHOR RODS	---
SC2	W10X68	1"x16"x16" STEEL PLATE W/ 6- 3/4" DIA. GR36 F1554 ANCHOR RODS	
SC3	HSS8X4X1/4	3/4"x14"x10" STEEL PLATE W/ 4- 3/4" DIA. GR36 F1554 ANCHOR RODS	---
SC4	HSS8X4X1/2	3/4"x14"x10" STEEL PLATE W/ 4- 3/4" DIA. GR36 F1554 ANCHOR RODS	---
SC6	HSS6X6X1/2	3/4"x12"x12" STEEL PLATE W/ 4- 3/4" DIA. GR36 F1554 ANCHOR RODS	---
SC7	HSS6X3X1/2	3/4"x12"x12" STEEL PLATE W/ 4- 3/4" DIA. GR36 F1554 ANCHOR RODS	---
SC8	5" XXS PIPE	3/4"x10"x10" STEEL PLATE W/ 4- 3/4" DIA. GR36 F1554 ANCHOR RODS	---

CONTINUOUS FOOTING (WF) SCHEDULE

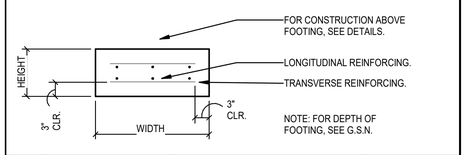

MARK	DIMENSIONS		FOOTING REINFORCING		REMARKS
	HEIGHT	WIDTH	LONGITUDINAL	TRANSVERSE	
WF1	12"	3'-0"	4- #5	#5 AT 12" O.C.	---

ISOLATED FOOTING (F) SCHEDULE

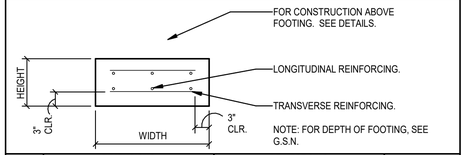

MARK	DIMENSIONS			REINFORCING		REMARKS
	HEIGHT	WIDTH	LENGTH	LONGITUDINAL	TRANSVERSE	
F1	12"	4'-0"	4'-0"	5- #5	5- #5	---
F2	16"	9'-6"	9'-6"	12- #5 TOP & BOTTOM	12- #5 TOP & BOTTOM	---
F3	24"	17'-0"	9'-0"	16- #5 TOP & BOTTOM	30- #5 TOP & BOTTOM	---
F4	12"	4'-6"	4'-6"	5- #5 TOP & BOTTOM	5- #5 TOP & BOTTOM	---
F5	12"	6'-0"	6'-0"	7- #5 TOP & BOTTOM	7- #5 TOP & BOTTOM	---

SHEAR WALL TYPE (SW)

WALL NO.	MATERIAL	NAILING (8d) 12" O.C. FIELD	ALLOWABLE SHEAR (WIND)	ANCHORS TO CONCRETE	HOLDOWN	REMARKS
SW1	7/16" PLYWOOD	6"	455 P/F	5/8"DIA ANCHORS AT 24" O.C.	NO ADD'L HOLDDOWN REQ'D	---

1. USE 3/8"X4.5"X4.5" PLATE WASHERS AT ALL ANCHOR BOLTS.
2. PROVIDE MIN. OF 2- 600S200-54 STUDS AT HOLDOWNS.

FOUNDATION PLAN NOTES

1. FOR SHEET INDEX, SEE COVER SHEET.
2. DEPTH OF FOOTING DIMENSIONS INDICATED IN THE G.S.N. ARE MINIMUMS. FOUNDATION CONTRACTOR SHALL COORDINATE WITH SOILS REPORT AND OTHER TRADES TO ENSURE THAT THESE MINIMUMS ARE SUFFICIENT FOR THE WORK. SEE TYPICAL DETAILS FOR ADDITIONAL REQUIREMENTS. G.C. SHALL FIELD VERIFY AS-BUILT T.O.F. ELEVATIONS AND COORDINATE W/ STEEL SUPPLIER. RESOLVE ANY DISCREPANCIES PRIOR TO STEEL FABRICATION AND DELIVERY.
3. COLUMN FOOTING ELEVATIONS SHOWN ON PLAN ARE BASED ON DATUM ELEVATION SPECIFIC TO THE PROJECT. RE: ARCH/CIVIL DRAWINGS FOR ACTUAL U.S.G.S. ELEVATIONS AND BENCHMARK LOCATION.
4. VERIFY ALL DIMENSIONS WITH ARCHITECTURAL DRAWINGS. DO NOT USE "CONC. C.J." AS DIMENSION LINE OR TO LOCATE BUILDING ELEMENTS.
5. CONTRACTOR TO PROVIDE CONCRETE CONTROL JOINTS PER G.S.N. AND DETAIL 101.
6. SCHEDULED MARK DESIGNATIONS ARE TYPICAL TO THE PROJECT AND MAY NOT NECESSARILY BE FOUND ON THIS PLAN.
7. FOOTING ELEVATIONS SHOWN ARE MAXIMUMS AND MAY NEED TO BE LOWERED DUE TO SOIL CONDITIONS. VERIFY CHANGES WITH ENGINEER OF RECORD.
8. VERIFY EXACT LOCATION OF DEPRESSED SLABS WITH ARCHITECTURAL DRAWINGS.
9. VERIFY EXACT SIZE AND LOCATION OF OPENINGS WITH ARCHITECTURAL DRAWINGS.

FOUNDATION PLAN LEGEND

- SW## — AS SHOWN ON PLAN INDICATES SHEAR WALL, SEE SCHEDULE FOR MORE INFORMATION.
- ## — AS SHOWN ON PLAN INDICATES SHEAR WALL HOLDOWN, SEE SCHEDULE FOR MORE INFORMATION.
- AS SHOWN ON PLAN INDICATES BRACE FRAME. SEE BRACE FRAME ELEVATIONS FOR ADDITIONAL INFORMATION.
- SC1 / F1 / -1'-0" — SEE STEEL COLUMN (SC) SCHEDULE FOR SIZE AND BASE CONNECTION; SEE ISOLATED FOOTING (F) SCHEDULE FOR FOOTING SIZE AND REINFORCING; TOP OF FOOTING ELEVATION — TOP OF FOOTING TO BE -1'-0" BELOW FINISHED GRADE - TYPICAL U.N.O.
- AS SHOWN ON PLAN INDICATES EXTTENTT OF PLYWOOD SHEATED COLD FORMED SHEAR WALL. SEE SCHEDULE THIS SHEET.

NOTE:
1. FINISHED GRADE IS DEFINED AS TOP OF SLAB FOR INTERIOR FOOTINGS OR LOWEST ADJACENT GRADE WITHIN 5'-0" OF FOOTING EDGES FOR PERIMETER FOOTINGS.
2. FOOTING ELEVATIONS ARE MINIMUMS BASED ON GEO TECHNICAL REPORT AND MAY NEED TO BE LOWERED DUE TO SOIL CONDITIONS, DRAINS, CONDUITS, EXTERIOR GRADES, ETC. CONTACT ENGINEER OF RECORD PRIOR TO LOWERING FOOTING.

FOUNDATION KEYNOTES

- 01 CONCRETE PILASTER W/ #5 AT 12" O.C. E.W. AT TOP AND SIDES.
- 02 REINFORCED CONCRETE DECK PER SCALE MANUFACTURER DESIGN, 10" MIN. THICKNESS.
- 03 STRUCTURAL FRAMING PER SCALE MANUFACTURER DESIGN.
- 04 EXISTING MASONRY WALL AND FOOTING.
- 05 HSS6x6x1/2 BRACE.
- 06 STEP FOOTING PER TYPICAL DETAIL.
- 07 EQUIPMENT PAD PER TYPICAL DETAIL.
- 08 SIDEWALK AND CURB PER ARCH'L.
- 09 12" CONCRETE FOOTING W/ #5 AT 12" O.C.

PK Associates, L.L.C.
6900 East Belleview Avenue, Suite 200
Greenwood Village, CO 80111
Phone: (720) 799-1058
Email: cadd@pkastructural.com
Website: www.pkastructural.com
Proj Num: 12345

Registered Professional Engineer (Civil) CERTIFICATE NO. 70374 JAMES APPLEYARD Date Signed 8/13/26 ARIZONA, U.S.A.

Issue Date:	10 JULY 2026		
Revisions:	#	Description	Date

gabor lorant architects
3326 n. 3rd avenue suite 200
phoenix, arizona 85013
tel: 602.667.9090
fax: 602.667.9133
gaborlorant.com
gla Project No.: 24102

ARIZONA DEPARTMENT OF TRANSPORTATION
PROJECT DELIVERY AND OPERATIONS DIVISION
PROJECT MANAGEMENT GROUP

SAN SIMON PORT OF ENTRY
FOUNDATION PLAN - ADMIN BUILDING & WEIGH SCALE

ROUTE I-10
MILEPOST 383
STRUCTURE NO.

F.H.W.A Arizona Division	STATE	PROJECT NO.	FEDERAL ID NO.	SHEET NO.	TOTAL SHEETS	RECORD DRAWING
	ARIZ.	010 CH 383	010-F(238)T	122	200	

LOCATION: SAN SIMON PORT OF ENTRY (POE)

TRACS NO. F0728 01 C

DWG NO. **S100**

____ OF ____

8/13/2026 11:32:20 AM

DO NOT SCALE DRAWINGS. DO NOT PLOT 'SCALE TO FIT'. THIS DOCUMENT IS FORMATTED FOR THE ANSI D (22"x34") SHEET SIZE.
FULL-SIZE PLOT ON ANSI D (22"x34") PAPER ONLY. HALF-SIZE PLOT ON 11"x17" PAPER ONLY.

STAPLE ZONE

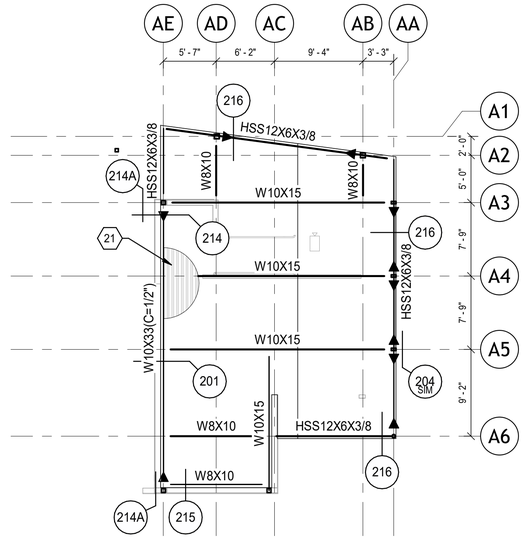

1 Admin Expansion Roof Plan
1/8" = 1'-0"

ROOF FRAMING KEYNOTES

21 1 1/2"x20 GA. STEEL DECK. ATTACH PER G.S.N.
22 HSS6x6x1/2 BRACE.
23 L4x4x1/4 TOP + BOTTOM - TYP.
24 HSS4x4x3/8 - TYP. WHERE SHOWN.
25 FRAMING AT PENETRATION PER TYP. DETAIL.

ROOF FRAMING NOTES

1. VERIFY ALL DIMENSIONS WITH ARCHITECTURAL DRAWINGS. ROOF ELEVATIONS, WHERE SHOWN, ARE TO BE PROVIDED AND VERIFIED BY THE ARCHITECT.
2. SCHEDULED MARK DESIGNATIONS ARE TYPICAL TO THE PROJECT AND MAY NOT NECESSARILY BE FOUND ON THIS PLAN.
3. FOR STEEL LINTELS, SEE SCHEDULE ON TYPICAL DETAIL SHEET. CONTRACTOR SHALL COORDINATE WITH OTHER TRADES FOR EXACT SIZE AND LOCATION REQUIREMENTS.
4. FOR MASONRY LINTELS SEE SCHEDULE ON TYPICAL DETAIL SHEET. CONTRACTOR SHALL COORDINATE WITH OTHER TRADES FOR EXACT SIZE AND LOCATION REQUIREMENTS.
5. FOR WOOD HEADERS SEE SCHEDULE ON TYPICAL DETAIL SHEET. CONTRACTOR SHALL COORDINATE WITH OTHER TRADES FOR EXACT SIZE AND LOCATION REQUIREMENTS.
6. FOR CLARITY, DETAILS MAY SHOW ONLY ONE SIDE OF FRAMING CONDITION.
7. FOR CLARITY, ALL ROOF OPENINGS MAY NOT BE SHOWN ON ROOF FRAMING PLAN. FOR EXACT SIZE, NUMBER AND LOCATION OF OPENINGS, SEE ARCHITECTURAL, MECHANICAL, PLUMBING, AND ELECTRICAL DRAWINGS. FOR FRAMING AT OPENINGS, SEE TYPICAL DETAILS.
8. DO NOT SUSPEND ANY SPRINKLERS, PIPING, CEILINGS OR ANY OTHER ITEMS FROM 2x JOISTS IN PANELIZED ROOF SYSTEM.
9. CONTRACTOR TO VERIFY, AND BE RESPONSIBLE FOR VARIATIONS IN CONCRETE QUANTITY DUE TO CAMBER, CONSTRUCTION DEAD LOAD DEFLECTIONS, AND/OR STRUCTURAL STEEL TOLERANCES OF STEEL BEAMS AND STEEL DECK. FOR CONCRETE CONTROL JOINTS, IN CONCRETE SLAB, SEE G.S.N. AND TYPICAL DETAILS.

ROOF FRAMING LEGEND

AS SHOWN ON PLAN INDICATES MOMENT CONNECTION.

AS SHOWN ON PLAN INDICATES COLLECTOR CONNECTION.

XXK — AS SHOWN ON PLAN INDICATES EQUIPMENT WEIGHTS WHERE XX IS IN KIPS. WEIGHT SHOWN INCLUDES ALL INERTIA BASES AND/OR HOUSEKEEPING PADS. IF WEIGHT OF ACTUAL EQUIPMENT IS GREATER THAN SHOWN, OR ADDITIONAL EQUIPMENT NOT SHOWN EXISTS, NOTIFY STRUCTURAL ENGINEER IMMEDIATELY.

AS SHOWN ON PLAN INDICATES BRACE FRAME. SEE BRACE FRAME ELEVATIONS FOR ADDITIONAL INFORMATION.

PK Associates, L.L.C.
6900 East Belleview Avenue, Suite 200
Greenwood Village, CO 80111
Phone: (720) 799-1058
Email: cadd@pkastructural.com
Website: www.pkastructural.com
Proj Num: 12345

Registered Professional Engineer (Civil) CERTIFICATE No. 70374 JAMES APPLEYARD Date Signed 1/8/26 ARIZONA, U.S.A.

Issue Date:	10 JULY 2026	
Revisions:	# Description	Date

gabor lorant architects
3326 n. 3rd avenue suite 200
phoenix, arizona 85013
tel: 602.667.9090
fax: 602.667.9133
gaborlorant.com

gla Project No.: 24102

ARIZONA DEPARTMENT OF TRANSPORTATION
PROJECT DELIVERY AND OPERATIONS DIVISION
PROJECT MANAGEMENT GROUP

SAN SIMON PORT OF ENTRY
ROOF FRAMING PLAN - ADMIN BUILDING

ROUTE I-10
MILEPOST 383
STRUCTURE NO.

F.H.W.A Arizona Division

STATE	PROJECT NO.	FEDERAL ID NO.	SHEET NO.	TOTAL SHEETS	RECORD DRAWING
ARIZ.	010 CH 383	010-F(238)T	123	200	

LOCATION: SAN SIMON PORT OF ENTRY (POE)

TRACS NO. F0728 01 C

DWG NO. **S101**
____ OF ____

8/13/2026 11:32:20 AM

DO NOT SCALE DRAWINGS. DO NOT PLOT 'SCALE TO FIT'. THIS DOCUMENT IS FORMATTED FOR THE ANSI D (22"x34") SHEET SIZE.
FULL-SIZE PLOT ON ANSI D (22"x34") PAPER ONLY. HALF-SIZE PLOT ON 11"x17" PAPER ONLY.

STAPLE ZONE

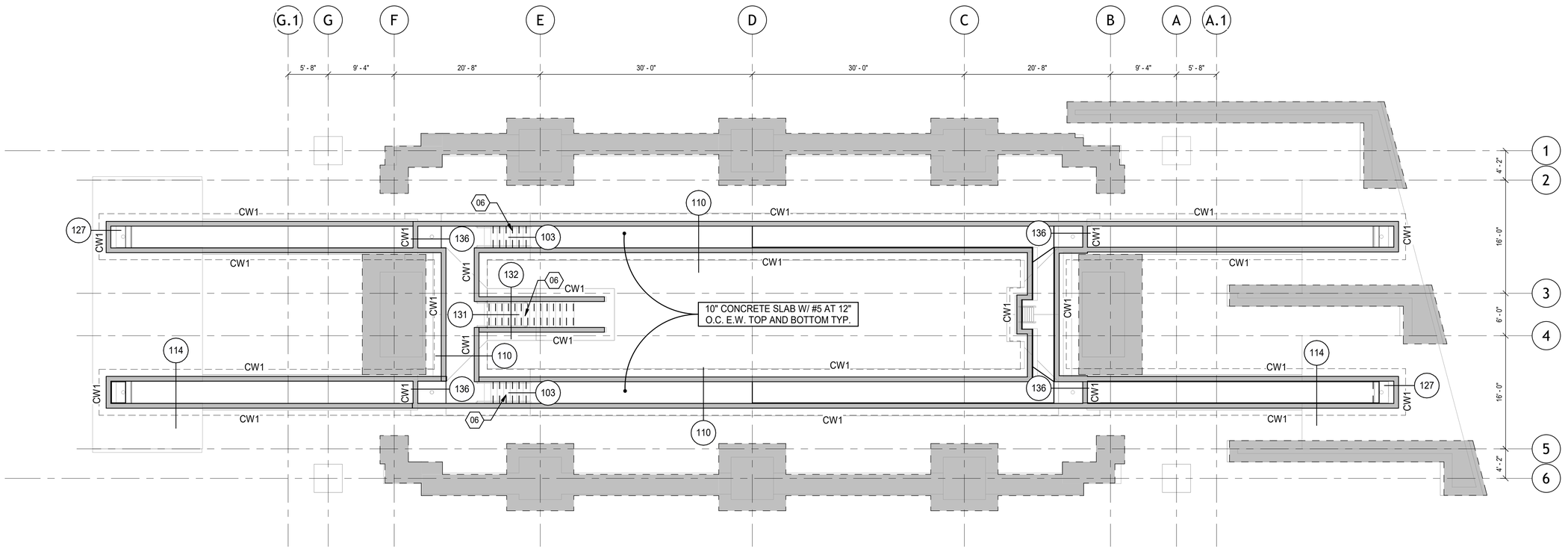

1 Pit Foundation Plan
1/8" = 1'-0"

CONCRETE WALL (CW) SCHEDULE

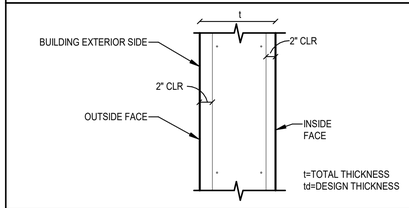

MARK	t	VERTICAL REINF.		HORIZONTAL REINF.		REMARKS
		INSIDE FACE	OUTSIDE FACE	INSIDE FACE	OUTSIDE FACE	
CW1	8"	#5@12"	---	#5@12"	---	---
CW3	16"	#5@12"	#5@12"	#5@12"	#5@12"	---
CW4	26"	#5@12"	#5@12"	#5@12"	#5@12"	---

FOUNDATION KEYNOTES

01 CONCRETE PILASTER W/ #5 AT 12" O.C. E.W. AT TOP AND SIDES.
02 REINFORCED CONCRETE DECK PER SCALE MANUFACTURER DESIGN, 10" MIN. THICKNESS.
03 STRUCTURAL FRAMING PER SCALE MANUFACTURER DESIGN.
04 EXISTING MASONRY WALL AND FOOTING.
05 HSS6x6x1/2 BRACE.
06 STEP FOOTING PER TYPICAL DETAIL.
07 EQUIPMENT PAD PER TYPICAL DETAIL.
08 SIDEWALK AND CURB PER ARCH'L.
09 12" CONCRETE FOOTING W/ #5 AT 12" O.C.

FOUNDATION PLAN NOTES

1. FOR SHEET INDEX, SEE COVER SHEET.
2. DEPTH OF FOOTING DIMENSIONS INDICATED IN THE G.S.N. ARE MINIMUMS. FOUNDATION CONTRACTOR SHALL COORDINATE WITH SOILS REPORT AND OTHER TRADES TO ENSURE THAT THESE MINIMUMS ARE SUFFICIENT FOR THE WORK. SEE TYPICAL DETAILS FOR ADDITIONAL REQUIREMENTS. G.C. SHALL FIELD VERIFY AS-BUILT T.O.F. ELEVATIONS AND COORDINATE W/ STEEL SUPPLIER. RESOLVE ANY DISCREPANCIES PRIOR TO STEEL FABRICATION AND DELIVERY.
3. COLUMN FOOTING ELEVATIONS SHOWN ON PLAN ARE BASED ON DATUM ELEVATION SPECIFIC TO THE PROJECT. RE: ARCH/CIVIL DRAWINGS FOR ACTUAL U.S.G.S. ELEVATIONS AND BENCHMARK LOCATION.
4. VERIFY ALL DIMENSIONS WITH ARCHITECTURAL DRAWINGS. DO NOT USE "CONC. C.J." AS DIMENSION LINE OR TO LOCATE BUILDING ELEMENTS.
5. CONTRACTOR TO PROVIDE CONCRETE CONTROL JOINTS PER G.S.N. AND DETAIL 101.
6. SCHEDULED MARK DESIGNATIONS ARE TYPICAL TO THE PROJECT AND MAY NOT NECESSARILY BE FOUND ON THIS PLAN.
7. FOOTING ELEVATIONS SHOWN ARE MAXIMUMS AND MAY NEED TO BE LOWERED DUE TO SOIL CONDITIONS. VERIFY CHANGES WITH ENGINEER OF RECORD.
8. VERIFY EXACT LOCATION OF DEPRESSED SLABS WITH ARCHITECTURAL DRAWINGS.
9. VERIFY EXACT SIZE AND LOCATION OF OPENINGS WITH ARCHITECTURAL DRAWINGS.

FOUNDATION PLAN LEGEND

SW## AS SHOWN ON PLAN INDICATES SHEAR WALL, SEE SCHEDULE FOR MORE INFORMATION.

AS SHOWN ON PLAN INDICATES SHEAR WALL HOLDOWN, SEE SCHEDULE FOR MORE INFORMATION.

AS SHOWN ON PLAN INDICATES BRACE FRAME. SEE BRACE FRAME ELEVATIONS FOR ADDITIONAL INFORMATION.

SC1 — SEE STEEL COLUMN (SC) SCHEDULE FOR SIZE AND BASE CONNECTION
F1 -1'-0" — SEE ISOLATED FOOTING (F) SCHEDULE FOR FOOTING SIZE AND REINFORCING
TOP OF FOOTING ELEVATION
TOP OF FOOTING TO BE -1'-0" BELOW FINISHED GRADE - TYPICAL U.N.O.

AS SHOWN ON PLAN INDICATES EXTTENTT OF PLYWOOD SHEATED COLD FORMED SHEAR WALL. SEE SCHEDULE THIS SHEET.

NOTE:
1. FINISHED GRADE IS DEFINED AS TOP OF SLAB FOR INTERIOR FOOTINGS OR LOWEST ADJACENT GRADE WITHIN 5'-0" OF FOOTING EDGES FOR PERIMETER FOOTINGS.
2. FOOTING ELEVATIONS ARE MINIMUMS BASED ON GEO TECHNICAL REPORT AND MAY NEED TO BE LOWERED DUE TO SOIL CONDITIONS, DRAINS, CONDUITS, EXTERIOR GRADES, ETC. CONTACT ENGINEER OF RECORD PRIOR TO LOWERING FOOTING.

PK Associates, L.L.C.
6900 East Belleview Avenue, Suite 200
Greenwood Village, CO 80111
Phone: (720) 799-1058
Email: cadd@pkastructural.com
Website: www.pkastructural.com
Proj Num: 12345

Registered Professional Engineer (Civil) CERTIFICATE NO. 70374 JAMES APPLEYARD Date Signed 8/13/26 ARIZONA, U.S.A.

Issue Date:	10 JULY 2026	
Revisions:	# Description	Date

gabor lorant architects
3326 n. 3rd avenue suite 200
phoenix, arizona 85013
tel: 602.667.9090
fax: 602.667.9133
gaborlorant.com

gla Project No.: 24102

ARIZONA DEPARTMENT OF TRANSPORTATION
PROJECT DELIVERY AND OPERATIONS DIVISION
PROJECT MANAGEMENT GROUP

SAN SIMON PORT OF ENTRY
FOUNDATION PLAN - INSPECTION BUILDING PIT LEVEL

ROUTE	MILEPOST	STRUCTURE NO.
I-10	383	

F.H.W.A Arizona Division	STATE	PROJECT NO.	FEDERAL ID NO.	SHEET NO.	TOTAL SHEETS	RECORD DRAWING
	ARIZ.	010 CH 383	010-F(238)T	124	200	

LOCATION: SAN SIMON PORT OF ENTRY (POE)
TRACS NO. F0728 01 C
DWG NO. **S110**
___ OF ___

8/13/2026 11:32:20 AM

DO NOT SCALE DRAWINGS. DO NOT PLOT SCALE TO FIT: THIS DOCUMENT IS FORMATTED FOR THE ANSI D (22"x34") SHEET SIZE.
FULL-SIZE PLOT ON ANSI D (22"x34") PAPER ONLY. HALF-SIZE PLOT ON 11"x17" PAPER ONLY.

STAPLE ZONE

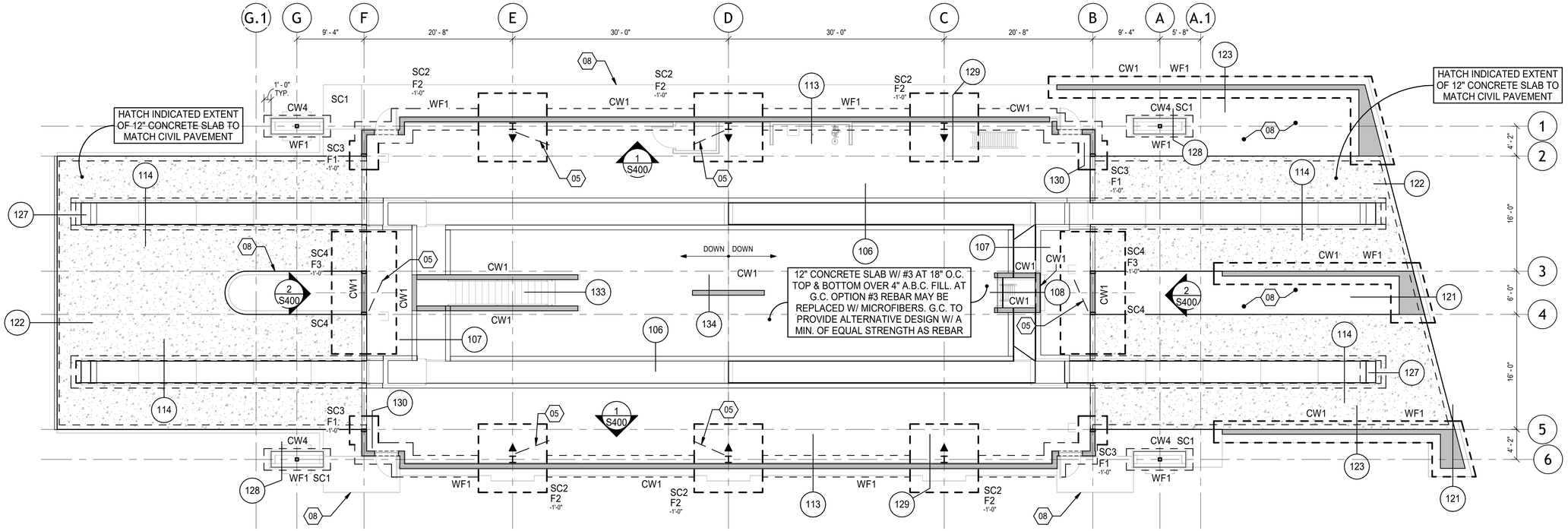

1 Foundation Plan
1/8" = 1'-0"

STEEL COLUMN (SC) SCHEDULE

NOTE: FOR ANCHOR BOLT PATTERN, SEE TYPICAL DETAIL

MARK	SIZE	BASE CONNECTION	REMARKS
SC1	HSS5X5X1/2	3/4"x12"x12" STEEL PLATE W/ 4- 3/4" DIA. GR36 F1554 ANCHOR RODS	---
SC2	W10X68	1"x16"x16" STEEL PLATE W/ 6- 3/4" DIA. GR36 F1554 ANCHOR RODS	
SC3	HSS8X4X1/4	3/4"x14"x10" STEEL PLATE W/ 4- 3/4" DIA. GR36 F1554 ANCHOR RODS	---
SC4	HSS8X4X1/2	3/4"x14"x10" STEEL PLATE W/ 4- 3/4" DIA. GR36 F1554 ANCHOR RODS	---
SC6	HSS6X6X1/2	3/4"x12"x12" STEEL PLATE W/ 4- 3/4" DIA. GR36 F1554 ANCHOR RODS	---
SC7	HSS6X3X1/2	3/4"x12"x12" STEEL PLATE W/ 4- 3/4" DIA. GR36 F1554 ANCHOR RODS	---
SC8	5" XXS PIPE	3/4"x10"x10" STEEL PLATE W/ 4- 3/4" DIA. GR36 F1554 ANCHOR RODS	---

CONCRETE WALL (CW) SCHEDULE

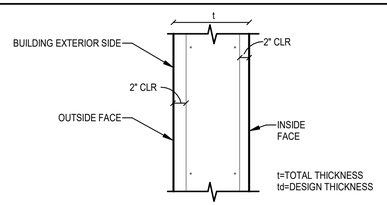

MARK	t	VERTICAL REINF.		HORIZONTAL REINF.		REMARKS
		INSIDE FACE	OUTSIDE FACE	INSIDE FACE	OUTSIDE FACE	
CW1	8"	#5@12"	---	#5@12"	---	---
CW3	16"	#5@12"	#5@12"	#5@12"	#5@12"	---
CW4	26"	#5@12"	#5@12"	#5@12"	#5@12"	---

ISOLATED FOOTING (F) SCHEDULE

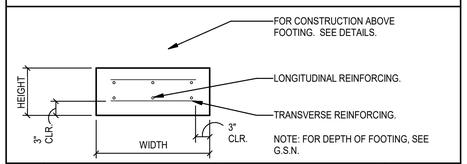

MARK	DIMENSIONS			REINFORCING		REMARKS
	HEIGHT	WIDTH	LENGTH	LONGITUDINAL	TRANSVERSE	
F1	12"	4'-0"	4'-0"	5- #5	5- #5	---
F2	16"	9'-6"	9'-6"	12- #5 TOP & BOTTOM	12- #5 TOP & BOTTOM	---
F3	24"	17'-0"	9'-0"	16- #5 TOP & BOTTOM	30- #5 TOP & BOTTOM	---
F4	12"	4'-6"	4'-6"	5- #5 TOP & BOTTOM	5- #5 TOP & BOTTOM	---
F5	12"	6'-0"	6'-0"	7- #5 TOP & BOTTOM	7- #5 TOP & BOTTOM	---

CONTINUOUS FOOTING (WF) SCHEDULE

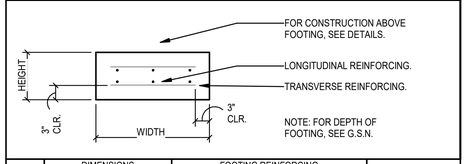

MARK	DIMENSIONS		FOOTING REINFORCING		REMARKS
	HEIGHT	WIDTH	LONGITUDINAL	TRANSVERSE	
WF1	12"	3'-0"	4- #5	#5 AT 12" O.C.	---

FOUNDATION SCHEDULE LOCATIONS

CW1, CW2, ETC.	CONCRETE WALL	THIS SHEET
F1, F2, ETC.	ISOLATED FOOTING	THIS SHEET
GB1, GB2, ETC.	GRADE BEAM	THIS SHEET
SC1, SC2, ETC.	STEEL COLUMN	THIS SHEET
WF1, WF2, ETC.	WALL FOOTING	THIS SHEET

FOUNDATION PLAN NOTES

1. FOR SHEET INDEX, SEE COVER SHEET.
2. DEPTH OF FOOTING DIMENSIONS INDICATED IN THE G.S.N. ARE MINIMUMS. FOUNDATION CONTRACTOR SHALL COORDINATE WITH SOILS REPORT AND OTHER TRADES TO ENSURE THAT THESE MINIMUMS ARE SUFFICIENT FOR THE WORK. SEE TYPICAL DETAILS FOR ADDITIONAL REQUIREMENTS. G.C. SHALL FIELD VERIFY AS-BUILT T.O.F. ELEVATIONS AND COORDINATE W/ STEEL SUPPLIER. RESOLVE ANY DISCREPANCIES PRIOR TO STEEL FABRICATION AND DELIVERY.
3. COLUMN FOOTING ELEVATIONS SHOWN ON PLAN ARE BASED ON DATUM ELEVATION SPECIFIC TO THE PROJECT. RE: ARCH/CIVIL DRAWINGS FOR ACTUAL U.S.G.S. ELEVATIONS AND BENCHMARK LOCATION.
4. VERIFY ALL DIMENSIONS WITH ARCHITECTURAL DRAWINGS. DO NOT USE "CONC. C.J." AS DIMENSION LINE OR TO LOCATE BUILDING ELEMENTS.
5. CONTRACTOR TO PROVIDE CONCRETE CONTROL JOINTS PER G.S.N. AND DETAIL 101.
6. SCHEDULED MARK DESIGNATIONS ARE TYPICAL TO THE PROJECT AND MAY NOT NECESSARILY BE FOUND ON THIS PLAN.
7. FOOTING ELEVATIONS SHOWN ARE MAXIMUMS AND MAY NEED TO BE LOWERED DUE TO SOIL CONDITIONS. VERIFY CHANGES WITH ENGINEER OF RECORD.
8. VERIFY EXACT LOCATION OF DEPRESSED SLABS WITH ARCHITECTURAL DRAWINGS.
9. VERIFY EXACT SIZE AND LOCATION OF OPENINGS WITH ARCHITECTURAL DRAWINGS.

FOUNDATION PLAN LEGEND

- SW## — AS SHOWN ON PLAN INDICATES SHEAR WALL, SEE SCHEDULE FOR MORE INFORMATION.
- ## — AS SHOWN ON PLAN INDICATES SHEAR WALL HOLDOWN, SEE SCHEDULE FOR MORE INFORMATION.
- AS SHOWN ON PLAN INDICATES BRACE FRAME. SEE BRACE FRAME ELEVATIONS FOR ADDITIONAL INFORMATION.
- SC1 / F1 -1'-0" — SEE STEEL COLUMN (SC) SCHEDULE FOR SIZE AND BASE CONNECTION; SEE ISOLATED FOOTING (F) SCHEDULE FOR FOOTING SIZE AND REINFORCING; TOP OF FOOTING ELEVATION; TOP OF FOOTING TO BE -1'-0" BELOW FINISHED GRADE - TYPICAL U.N.O.
- AS SHOWN ON PLAN INDICATES EXTTENTT OF PLYWOOD SHEATED COLD FORMED SHEAR WALL. SEE SCHEDULE THIS SHEET.

NOTE:
1. FINISHED GRADE IS DEFINED AS TOP OF SLAB FOR INTERIOR FOOTINGS OR LOWEST ADJACENT GRADE WITHIN 5'-0" OF FOOTING EDGES FOR PERIMETER FOOTINGS.
2. FOOTING ELEVATIONS ARE MINIMUMS BASED ON GEO TECHNICAL REPORT AND MAY NEED TO BE LOWERED DUE TO SOIL CONDITIONS, DRAINS, CONDUITS, EXTERIOR GRADES, ETC. CONTACT ENGINEER OF RECORD PRIOR TO LOWERING FOOTING.

FOUNDATION KEYNOTES

01 CONCRETE PILASTER W/ #5 AT 12" O.C. E.W. AT TOP AND SIDES.
02 REINFORCED CONCRETE DECK PER SCALE MANUFACTURER DESIGN, 10" MIN. THICKNESS.
03 STRUCTURAL FRAMING PER SCALE MANUFACTURER DESIGN.
04 EXISTING MASONRY WALL AND FOOTING.
05 HSS6x6x1/2 BRACE.
06 STEP FOOTING PER TYPICAL DETAIL.
07 EQUIPMENT PAD PER TYPICAL DETAIL.
08 SIDEWALK AND CURB PER ARCH'L.
09 12" CONCRETE FOOTING W/ #5 AT 12" O.C.

PK Associates, L.L.C.
6900 East Belleview Avenue, Suite 200
Greenwood Village, CO 80111
Phone: (720) 799-1058
Email: cadd@pkastructural.com
Website: www.pkastructural.com
Proj Num: 12345

Registered Professional Engineer (Civil) CERTIFICATE NO. 70374 JAMES APPLEYARD Date Signed 7/31/26 ARIZONA, U.S.A.

Issue Date:	10 JULY 2026	
Revisions:	# Description	Date

gabor lorant architects
3326 n. 3rd avenue suite 200
phoenix, arizona 85013
tel: 602.667.9090
fax: 602.667.9133
gaborlorant.com

gla Project No.: 24102

ARIZONA DEPARTMENT OF TRANSPORTATION
PROJECT DELIVERY AND OPERATIONS DIVISION
PROJECT MANAGEMENT GROUP

SAN SIMON PORT OF ENTRY
FOUNDATION PLAN - INSPECTION BUILDING

ROUTE I-10
MILEPOST 383
STRUCTURE NO.

F.H.W.A Arizona Division	STATE	PROJECT NO.	FEDERAL ID NO.	SHEET NO.	TOTAL SHEETS	RECORD DRAWING
	ARIZ.	010 CH 383	010-F(238)T	125	200	

LOCATION: SAN SIMON PORT OF ENTRY (POE)

TRACS NO. F0728 01 C

DWG NO. **S111**
___ OF ___

8/13/2026 11:32:20 AM

DO NOT SCALE DRAWINGS. DO NOT PLOT 'SCALE TO FIT'. THIS DOCUMENT IS FORMATTED FOR THE ANSI D (22"x34") SHEET SIZE.
FULL-SIZE PLOT ON ANSI D (22"x34") PAPER ONLY. HALF-SIZE PLOT ON 11"x17" PAPER ONLY.

STAPLE ZONE

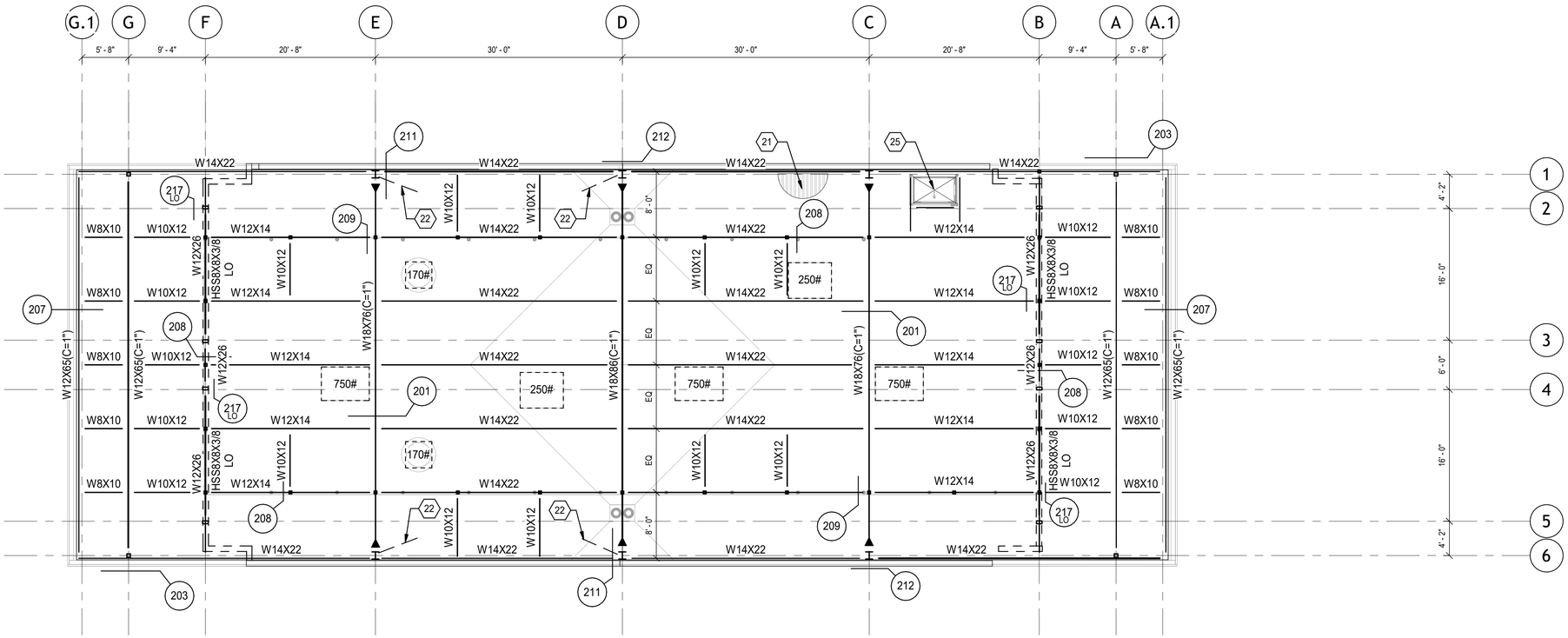

1 Roof Framing Plan
1/8" = 1'-0"

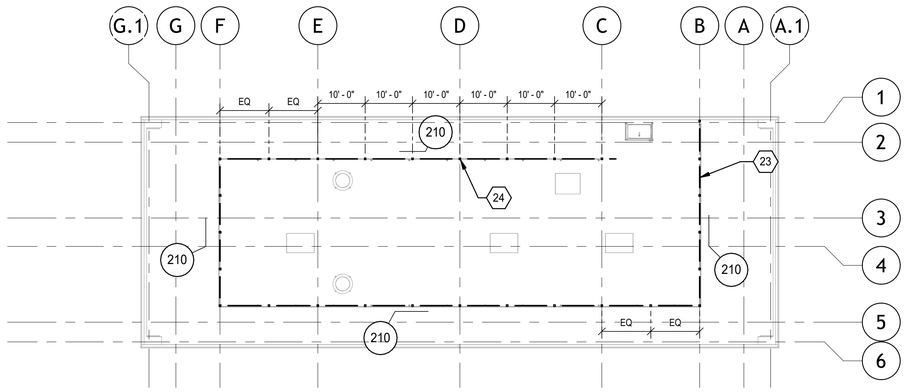

2 RTU Enclosure Framing Plan
1/16" = 1'-0"

ROOF FRAMING KEYNOTES

21 1 1/2"x20 GA. STEEL DECK. ATTACH PER G.S.N.
22 HSS6x6x1/2 BRACE.
23 L4x4x1/4 TOP + BOTTOM - TYP.
24 HSS4x4x3/8 - TYP. WHERE SHOWN.
25 FRAMING AT PENETRATION PER TYP. DETAIL.

ROOF FRAMING NOTES

1. VERIFY ALL DIMENSIONS WITH ARCHITECTURAL DRAWINGS. ROOF ELEVATIONS, WHERE SHOWN, ARE TO BE PROVIDED AND VERIFIED BY THE ARCHITECT.
2. SCHEDULED MARK DESIGNATIONS ARE TYPICAL TO THE PROJECT AND MAY NOT NECESSARILY BE FOUND ON THIS PLAN.
3. FOR STEEL LINTELS, SEE SCHEDULE ON TYPICAL DETAIL SHEET. CONTRACTOR SHALL COORDINATE WITH OTHER TRADES FOR EXACT SIZE AND LOCATION REQUIREMENTS.
4. FOR MASONRY LINTELS SEE SCHEDULE ON TYPICAL DETAIL SHEET. CONTRACTOR SHALL COORDINATE WITH OTHER TRADES FOR EXACT SIZE AND LOCATION REQUIREMENTS.
5. FOR WOOD HEADERS SEE SCHEDULE ON TYPICAL DETAIL SHEET. CONTRACTOR SHALL COORDINATE WITH OTHER TRADES FOR EXACT SIZE AND LOCATION REQUIREMENTS.
6. FOR CLARITY, DETAILS MAY SHOW ONLY ONE SIDE OF FRAMING CONDITION.
7. FOR CLARITY, ALL ROOF OPENINGS MAY NOT BE SHOWN ON ROOF FRAMING PLAN. FOR EXACT SIZE, NUMBER AND LOCATION OF OPENINGS, SEE ARCHITECTURAL, MECHANICAL, PLUMBING, AND ELECTRICAL DRAWINGS. FOR FRAMING AT OPENINGS, SEE TYPICAL DETAILS.
8. DO NOT SUSPEND ANY SPRINKLERS, PIPING, CEILINGS OR ANY OTHER ITEMS FROM 2x JOISTS IN PANELIZED ROOF SYSTEM.
9. CONTRACTOR TO VERIFY, AND BE RESPONSIBLE FOR VARIATIONS IN CONCRETE QUANTITY DUE TO CAMBER, CONSTRUCTION DEAD LOAD DEFLECTIONS, AND/OR STRUCTURAL STEEL TOLERANCES OF STEEL BEAMS AND STEEL DECK. FOR CONCRETE CONTROL JOINTS, IN CONCRETE SLAB, SEE G.S.N. AND TYPICAL DETAILS.

ROOF FRAMING LEGEND

- AS SHOWN ON PLAN INDICATES MOMENT CONNECTION.
- AS SHOWN ON PLAN INDICATES COLLECTOR CONNECTION.
- XXK — AS SHOWN ON PLAN INDICATES EQUIPMENT WEIGHTS WHERE XX IS IN KIPS. WEIGHT SHOWN INCLUDES ALL INERTIA BASES AND/OR HOUSEKEEPING PADS. IF WEIGHT OF ACTUAL EQUIPMENT IS GREATER THAN SHOWN, OR ADDITIONAL EQUIPMENT NOT SHOWN EXISTS, NOTIFY STRUCTURAL ENGINEER IMMEDIATELY.
- AS SHOWN ON PLAN INDICATES BRACE FRAME. SEE BRACE FRAME ELEVATIONS FOR ADDITIONAL INFORMATION.

PK Associates, L.L.C.
6900 East Bellevieve Avenue, Suite 200
Greenwood Village, CO 80111
Phone: (720) 799-1058
Email: cadd@pkastructural.com
Website: www.pkastructural.com
Proj Num: 12345

Registered Professional Engineer (Civil) CERTIFICATE NO. 70374 JAMES APPLEYARD Date Signed 1/9/26 ARIZONA, U.S.A.

Issue Date:	10 JULY 2026	
Revisions:	# Description	Date

gabor lorant architects
3326 n. 3rd avenue suite 200
phoenix, arizona 85013
tel: 602.667.9090
fax: 602.667.9133
gaborlorant.com
gla Project No.: 24102

ARIZONA DEPARTMENT OF TRANSPORTATION
PROJECT DELIVERY AND OPERATIONS DIVISION
PROJECT MANAGEMENT GROUP

SAN SIMON PORT OF ENTRY
ROOF FRAMING PLAN - INSPECTION BUILDING

ROUTE I-10
MILEPOST 383
STRUCTURE NO.

F.H.W.A Arizona Division

STATE	PROJECT NO.	FEDERAL ID NO.	SHEET NO.	TOTAL SHEETS	RECORD DRAWING
ARIZ.	010 CH 383	010-F(238)T	126	200	

LOCATION: SAN SIMON PORT OF ENTRY (POE)

TRACS NO. F0728 01 C

DWG NO. **S112**
____ OF ____

8/13/2026 11:32:20 AM

DO NOT SCALE DRAWINGS. DO NOT PLOT "SCALE TO FIT". THIS DOCUMENT IS FORMATTED FOR THE ANSI D (22"x34") SHEET SIZE.
FULL-SIZE PLOT ON ANSI D (22"x34") PAPER ONLY. HALF-SIZE PLOT ON 11"x17" PAPER ONLY.

STAPLE ZONE

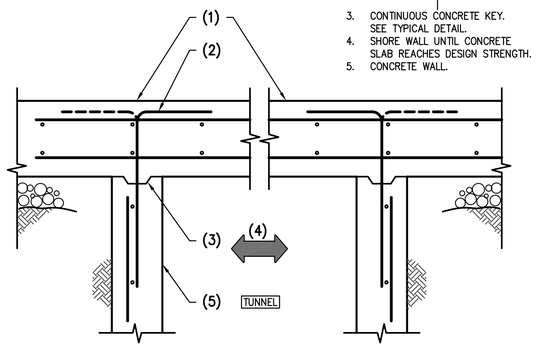

NOTES:
1. CONCRETE SLAB.
2. #5 SLAB DOWELS AT 12" O.C.
   x 36" / 36"
3. CONTINUOUS CONCRETE KEY. SEE TYPICAL DETAIL.
4. SHORE WALL UNTIL CONCRETE SLAB REACHES DESIGN STRENGTH.
5. CONCRETE WALL.

107 *CONCRETE TUNNEL SLAB* — NO SCALE

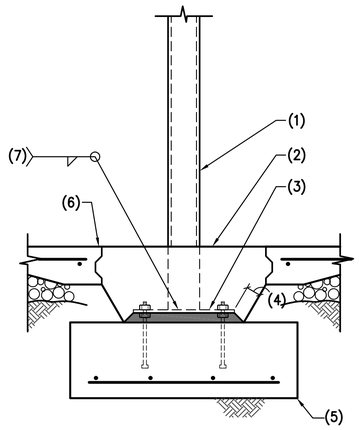

NOTES:
1. STEEL COLUMN.
2. CONCRETE CLOSURE POUR AROUND COLUMN PER TYPICAL DETAIL.
3. STEEL BASE PLATE WITH DOUBLE NUTS OVER 2"± DRYPACK.
4. 3" MIN CONCRETE COVER ALL AROUND STEEL BELOW GRADE.
5. CONCRETE FOOTING.
6. CONCRETE SLAB ON GRADE.
7. WELD PER TYPICAL DETAIL 14/S004.

105 *INTERIOR STEEL COLUMN FOOTING* — NO SCALE

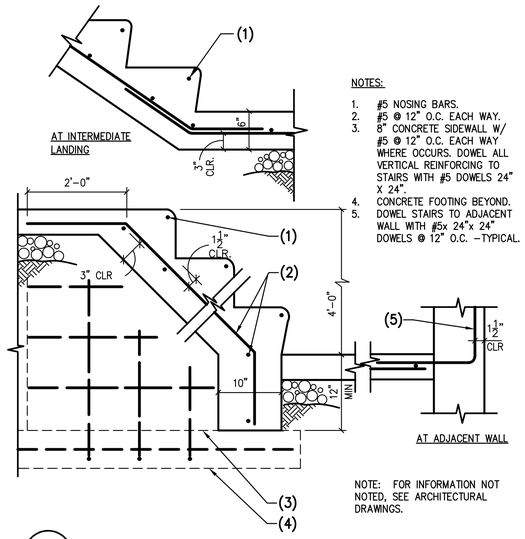

NOTES:
1. #5 NOSING BARS.
2. #5 @ 12" O.C. EACH WAY.
3. 8" CONCRETE SIDEWALL W/ #5 @ 12" O.C. EACH WAY WHERE OCCURS. DOWEL ALL VERTICAL REINFORCING TO STAIRS WITH #5 DOWELS 24" X 24".
4. CONCRETE FOOTING BEYOND.
5. DOWEL STAIRS TO ADJACENT WALL WITH #5x 24"x 24" DOWELS @ 12" O.C. –TYPICAL.

NOTE: FOR INFORMATION NOT NOTED, SEE ARCHITECTURAL DRAWINGS.

103 *TYPICAL CONCRETE STAIRS ON GRADE* — NO SCALE

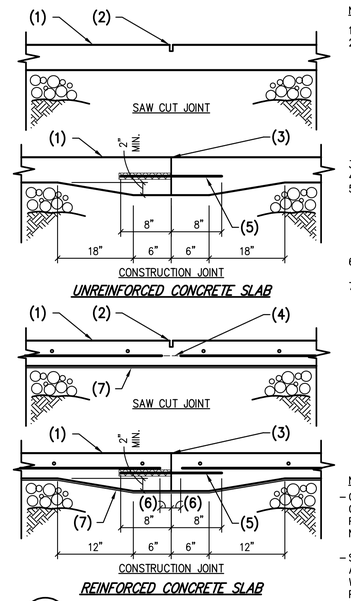

NOTES:
1. CONCRETE SLAB ON GRADE.
2. SAWCUT – 1/8" WIDE x1/4 SLAB THICKNESS IN DEPTH – CUT SHALL BE MADE SOON ENOUGH TO PREVENT SHRINKAGE CRACKING, BUT NOT SO SOON AS TO CAUSE SPALLING OF THE CONCRETE WHILE SAWING. WORK MUST BE ACCOMPLISHED WITHIN 24 HOURS OF CONCRETE PLACEMENT.
3. CONSTRUCTION JOINT.
4. CUT EVERY OTHER BAR.
5. 3/4"ø x16" LONG SMOOTH DOWEL AT 16" O.C. – DOWELS MUST BE CAREFULLY ALIGNED AND SUPPORTED DURING CONCRETE OPERATION. MISALIGNED DOWELS CAUSE CRACKING.
6. STOP SLAB REINF. AT 1 1/2" FROM JOINT.
7. VAPOR BARRIER WHERE SPECIFIED ON PLAN.

NOTE:
– CONSTRUCTION JOINTS NEED ONLY OCCUR AT EXPOSED EDGES DURING PLACEMENT UNLESS SPECIFICALLY NOTED ON THE PLANS.
– SLAB'S REINFORCEMENT TO BE LOCATED AT THE TOP 1/3 OF SLAB THICKNESS WHERE VAPOR BARRIER SPECIFIED ON PLANS.

101 *CONTROL JOINTS IN CONCRETE SLAB ON GRADE* — NO SCALE

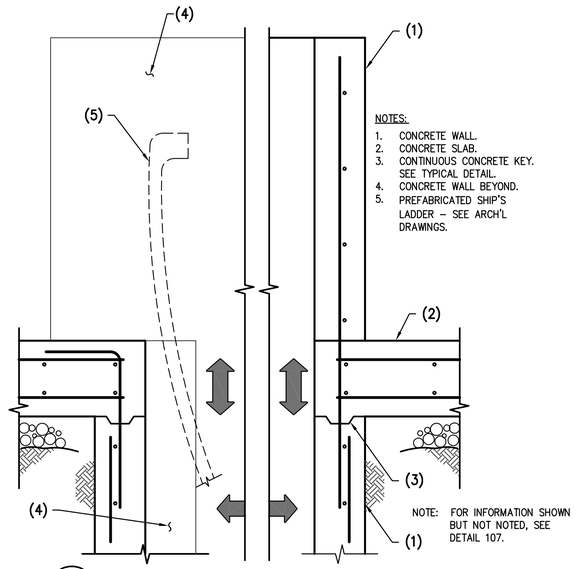

NOTES:
1. CONCRETE WALL.
2. CONCRETE SLAB.
3. CONTINUOUS CONCRETE KEY. SEE TYPICAL DETAIL.
4. CONCRETE WALL BEYOND.
5. PREFABRICATED SHIP'S LADDER – SEE ARCH'L DRAWINGS.

NOTE: FOR INFORMATION SHOWN BUT NOT NOTED, SEE DETAIL 107.

108 *CONCRETE SLAB AT TUNNEL* — NO SCALE

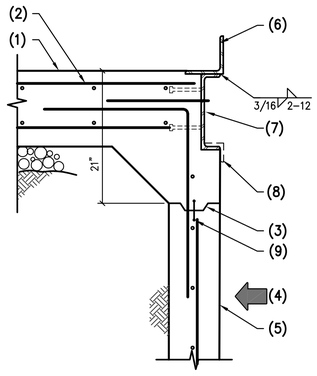

NOTES:
1. CONCRETE SLAB.
2. #5 SLAB DOWELS AT 12" O.C.
   x 36" / 36"
3. CONTINUOUS CONCRETE KEY. SEE TYPICAL DETAIL.
4. SHORE WALL UNTIL CONCRETE SLAB REACHES DESIGN STRENGTH.
5. CONCRETE WALL.
6. CONT. L6x6x1" STEEL ANGLE.
7. CONT. C12x20.7 W/ 2– 1/2" H.S. AT 24" O.C.
8. CONT. STEEL ANGLE PER ARCH'L.
9. WATER STOP PER ARCH'L.

106 *CONCRETE SLAB AT PIT WALL* — NO SCALE

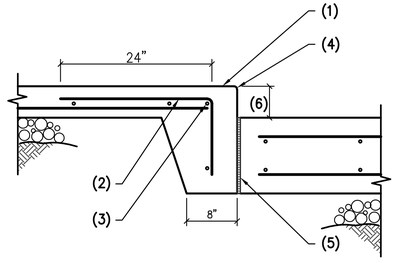

NOTES:
1. CONCRETE SLAB.
2. #4 SLAB DOWELS AT 16" O.C.
3. CONTINUOUS #4 TOP AND BOTTOM.
4. TOOLED EDGE.
5. 1/2" THICK EXPANSION JOINT MATERIAL.
6. FOR DIMENSION, SEE PLANS.

104 *STEP IN SLAB ON GRADE* — NO SCALE

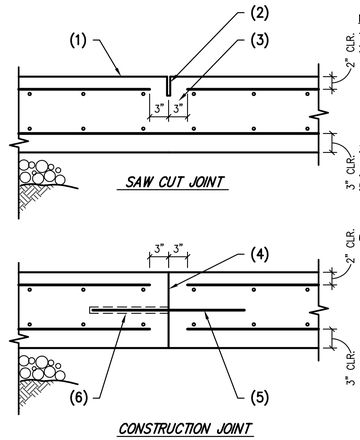

NOTES:
1. CONCRETE SLAB ON GRADE.
2. SAWCUT – 1/8" WIDE x 3" DEEP CUT SHALL BE MADE SOON ENOUGH TO PREVENT SHRINKAGE CRACKING, BUT NOT SO SOON AS TO CAUSE SPALLING OF THE CONCRETE WHILE SAWING. WORK MUST BE ACCOMPLISHED WITHIN 24 HOURS OF CONCRETE PLACEMENT.
3. STOP TOP REINFORCING EACH SIDE OF SAWCUT LOCATION.
4. CONSTRUCTION JOINT.
5. 1"ø x24" LONG SMOOTH DOWELS AT 12" O.C. DOWELS MUST BE CAREFULLY ALIGNED AND SUPPORTED DURING CONCRETE OPERATION.
6. PLASTIC SHEATHING TO PREVENT CONCRETE FROM ADHEARING TO DOWEL.

102 *CONTROL JOINT IN CONCRETE SLAB ON GRADE* — NO SCALE

PK ASSOCIATES, LLC
6900 E. Belleview Ave. Suite 200
Greenwood Village, CO 80111
Phone: (720) 799.1058
Email: cadd@pkastructural.com
Website: www.pkastructural.com
Proj Num: 25113

Registered Professional Engineer (Civil) CERTIFICATE NO. 70374 JAMES APPLEYARD Date Signed 1/9/26 ARIZONA, U.S.A.

Issue Date:	10 JULY 2026	
Revisions:	Δ Description	Date

gabor lorant architects
3326 n. 3rd avenue suite 200
phoenix, arizona 85013
tel: 602.667.9090
fax: 602.667.9133
gaborlorant.com

gla Project No.: 24102

ARIZONA DEPARTMENT OF TRANSPORTATION
PROJECT DELIVERY AND OPERATIONS DIVISION
PROJECT MANAGEMENT GROUP

SAN SIMON PORT OF ENTRY
FOUNDATION DETAILS

ROUTE	I-10
MILEPOST	383
STRUCTURE NO.	

F.H.W.A Arizona Division

STATE	PROJECT NO.	FEDERAL ID NO.	SHEET NO.	TOTAL SHEETS	RECORD DRAWING
ARIZ.	010 CH 383	010-F(238)T	127	200	

LOCATION: SAN SIMON PORT OF ENTRY (POE)

TRACS NO. F0728 01 C

DWG NO. **S200**

____ OF ____

DO NOT SCALE DRAWINGS. DO NOT PLOT "SCALE TO FIT". THIS DOCUMENT IS FORMATTED FOR THE ANSI D (22"x34") SHEET SIZE.
FULL-SIZE PLOT ON ANSI D (22"x34") PAPER ONLY. HALF-SIZE PLOT ON 11"x17" PAPER ONLY.

STAPLE ZONE

NOTES:
1. CONCRETE SLAB.
2. CONCRETE FOOTING.
3. #5 AT 12" O.C.
4. CONT. C12x20.7 W/ 2–1/2"ϕH.S. AT 24" O.C.
5. CONT. STEEL ANGLE PER ARCH'L.
6. STEEL PLATE AND ATTACHMENT PER ARCH'L.
7. KEY PER TYP. DETAIL

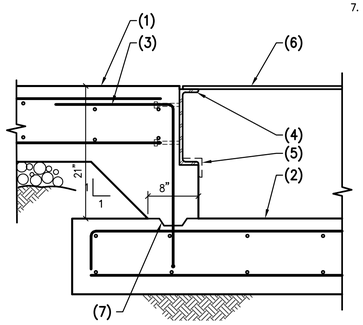

114 CONCRETE SLAB AT PIT COVER TROUGH — NO SCALE

NOTES:
1. STEEL STUD WALL.
2. 1/2"ϕ ANCHOR BOLT AT 48" O.C.
3. CONTINUOUS TRACK TO MATCH STUD SIZE AND GAGE.
4. CONCRETE WALL.
5. CONCRETE SLAB.
6. CONCRETE FOOTING.
7. CONCRETE SLAB WHERE OCCURS.
8. WINDOW WALL AND ATTACHMENT PER ARCH'L

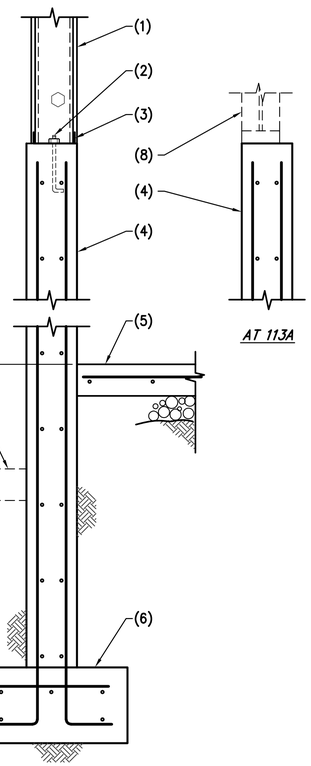

AT 113A

113 EXTERIOR WALL FOOTING
113A AS NOTED — NO SCALE

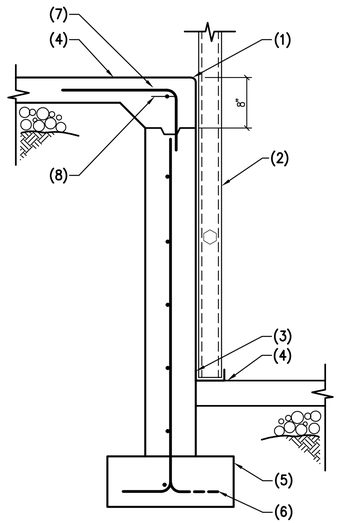

NOTES:
1. TOOLED EDGE – SEE ARCH'L DRAWINGS FOR ADDITIONAL INFORMATION.
2. STEEL STUD WALL.
3. 8" CONCRETE WALL WITH #4 AT 12" O.C. EACH WAY.
4. CONCRETE SLAB ON GRADE.
5. CONCRETE FOOTING.
6. ALTERNATE BENDS.
7. #4 DOWELS AT 24" O.C. 16"x48" (SLV).
8. 1– #4 CONTINUOUS.

111 STEP IN CONC. SLAB — NO SCALE

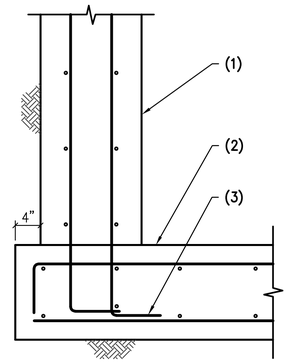

NOTES:
1. CONCRETE WALL.
2. CONCRETE TUNNEL SLAB.
3. STANDARD 90° HOOK.

109 CONCRETE WALL AT PIT SLAB — NO SCALE

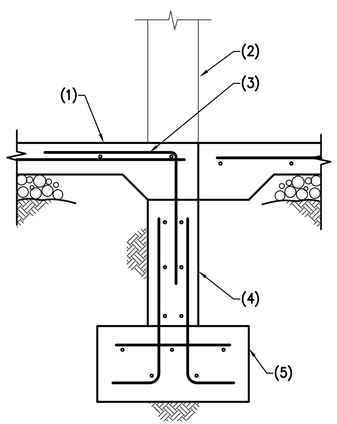

NOTES:
1. CONCRETE SLAB.
2. CONCRETE WALL BEYOND.
3. #4 SLAB DOWELS AT 16" O.C. X 24" / 24"
4. 8" CONCRETE WALL FROM BEYOND – CONTINUE VERTICAL AND HORIZONTAL REINFORCING FROM BEYOND.
5. CONTINUOUS FOOTING.

115 OPENING IN CONCRETE WALL AT STEP IN SLAB — NO SCALE

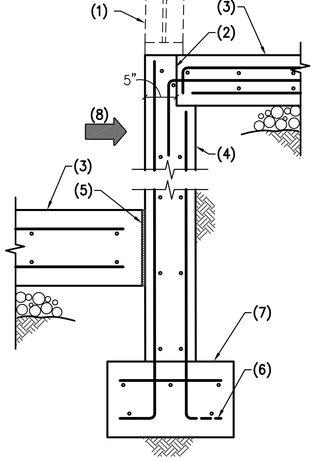

NOTES:
1. WINDOW SYSTEM – SEE ARCHITECTURAL DRAWINGS.
2. #4 SLAB DOWELS AT 12" O.C. x 24" / 36"
3. CONCRETE SLAB.
4. CONCRETE WALL.
5. 1/2" THICK EXPANSION JOIST MATERIAL.
6. STANDARD 90° HOOK – ALTERNATE BENDS.
7. CONCRETE FOOTING.
8. SHORE WALL UNTIL RAISED SLAB REACHES DESIGN STRENGTH.

112 CONCRETE WALL FOOTING — NO SCALE

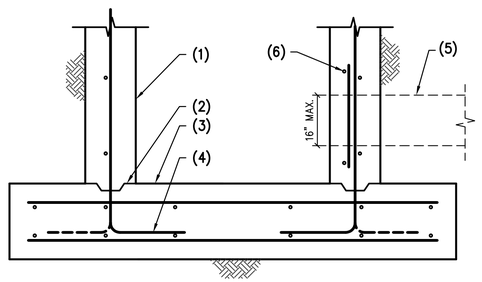

NOTES:
1. CONCRETE WALL.
2. CONTINUOUS CONCRETE KEY.
3. CONCRETE MAT SLAB.
4. STANDARD 90° BEND – ALTERNATE BENDS.
5. DUCT AS OCCURS PER MECH. PLANS.
6. ADD'L #5x4'–0" ON 4 SIDES OF PENETRATION.

110 FOUNDATION/SLAB AT INSPECTION PIT — NO SCALE

PK ASSOCIATES, LLC
6900 E. Belleview Ave. Suite 200
Greenwood Village, CO 80111
Phone: (720) 799.1058
Email: cadd@pkastructural.com
Website: www.pkastructural.com
Proj Num: 25113

Registered Professional Engineer (Civil) CERTIFICATE NO. 70374 JAMES APPLEYARD Date Signed 6/19/26 ARIZONA, U.S.A.

Issue Date:	10 JULY 2026		
Revisions:	1 Description	Date	

gabor lorant architects
3326 n. 3rd avenue suite 200
phoenix, arizona 85013
tel: 602.667.9090
fax: 602.667.9133
gaborlorant.com

gla Project No.: 24102

ARIZONA DEPARTMENT OF TRANSPORTATION
PROJECT DELIVERY AND OPERATIONS DIVISION
PROJECT MANAGEMENT GROUP
SAN SIMON PORT OF ENTRY
FOUNDATION DETAILS

ROUTE	MILEPOST	STRUCTURE NO.
I-10	383	

F.H.W.A Arizona Division

STATE	PROJECT NO.	FEDERAL ID NO.	SHEET NO.	TOTAL SHEETS	RECORD DRAWING
ARIZ.	010 CH 383	010-F(238)T	128	200	

LOCATION: SAN SIMON PORT OF ENTRY (POE)

TRACS NO. F0728 01 C

DWG NO. **S201**

___ OF ___

DO NOT SCALE DRAWINGS. DO NOT PLOT "SCALE TO FIT". THIS DOCUMENT IS FORMATTED FOR THE ANSI D (22"x34") SHEET SIZE.
FULL-SIZE PLOT ON ANSI D (22"x34") PAPER ONLY. HALF-SIZE PLOT ON 11"x17" PAPER ONLY.

STAPLE ZONE

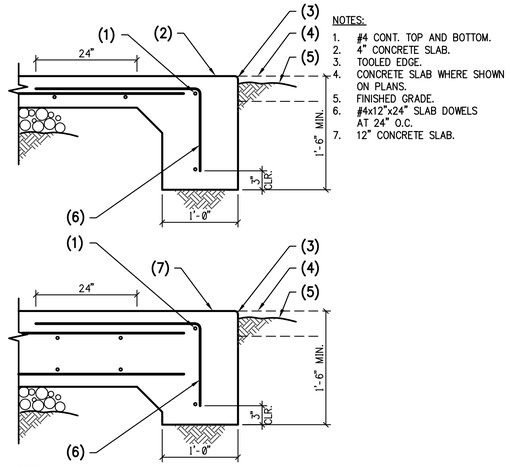

NOTES:
1. #4 CONT. TOP AND BOTTOM.
2. 4" CONCRETE SLAB.
3. TOOLED EDGE.
4. CONCRETE SLAB WHERE SHOWN ON PLANS.
5. FINISHED GRADE.
6. #4x12"x24" SLAB DOWELS AT 24" O.C.
7. 12" CONCRETE SLAB.

122 *TYPICAL CONCRETE SLAB TURNDOWN*
NO SCALE

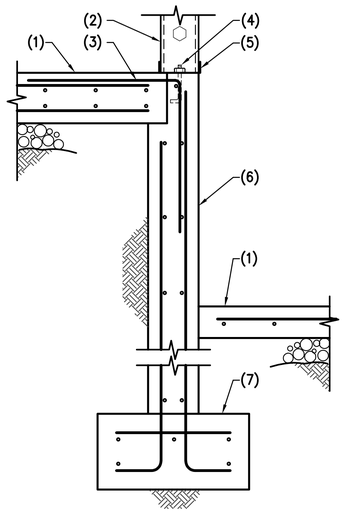

NOTES:
1. CONCRETE SLAB.
2. STEEL STUD WALL.
3. #4 SLAB DOWELS AT 12" O.C.
x
24"
24"
4. 1/2"ø ANCHOR BOLT AT 48" O.C.
5. CONTINUOUS TRACK TO MATCH STUD SIZE AND GAGE.
6. CONCRETE WALL.
7. CONCRETE FOOTING.

120 *CONCRETE WALL FOOTING*
NO SCALE

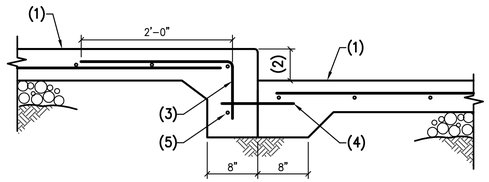

NOTES:
1. CONCRETE SLAB.
2. FOR DIMENSION, SEE PLAN.
3. #4x12" LONG SLAB DOWELS AT 16" O.C.
4. 3/4"ø SMOOTH DOWELS AT 16" O.C. CENTER ON JOINT.

118 *STEP IN SLAB ON GRADE*
NO SCALE

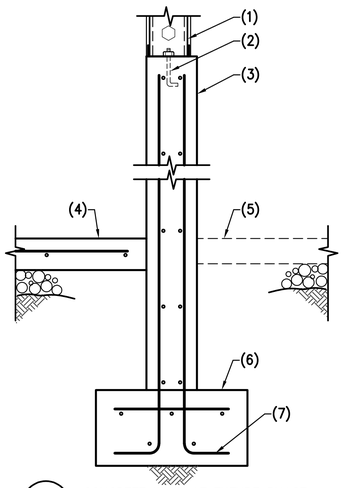

NOTES:
1. STEEL STUD WALL.
2. 5/8"ø ANCHOR BOLT AT 32" O.C.
3. CONCRETE WALL.
4. CONCRETE SLAB.
5. FUTURE CONCRETE SLAB.
6. CONCRETE FOOTING.
7. STANDARD 90° BEND.

116 *CONCRETE WALL AT FUTURE PHASE*
NO SCALE

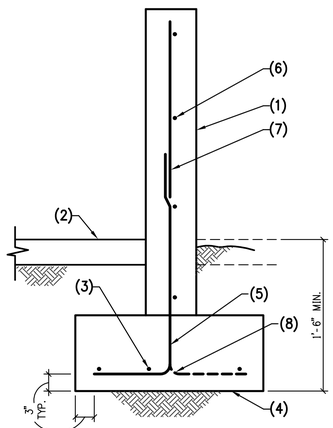

NOTES:
1. CONCRETE WALL. SEE PLAN FOR THICKNESS.
2. CONCRETE SLAB WHERE OCCURS.
3. CONT. REINFORCING PER PLAN.
4. CONCRETE FOOTING PER PLAN.
5. DOWELS TO MATCH AND LAP VERTICAL WALL REINFORCING PER G.S.N.
6. HORIZONTAL REINFORCING PER PLAN.
7. VERTICAL REINFORCING PER PLAN.
8. ALTERNATE BENDS.

123 *EXTERIOR CONCRETE WALL AND FOOTING*
NO SCALE

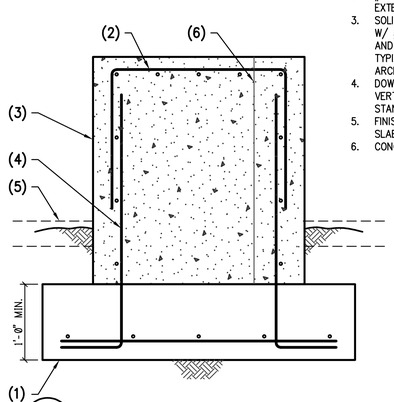

NOTES:
1. CONCRETE FOOTING – EXTEND 8" PAST FACE OF WALLS.
2. #5 AT 12" O.C. EACH WAY – EXTEND DOWN 24" FOR LAP.
3. SOLID C.I.P. CONCRETE BARRIER W/ #5 VERTICALS AT 12" O.C. AND #4 HORIZONTALS AT 12" O.C. – TYPICAL AT PERIMETER – SEE ARCH'L. FOR SLOPE AND HEIGHT.
4. DOWELS TO MATCH AND LAP VERTICAL REINFORCING – W/ STANDARD HOOK.
5. FINISHED GRADE OR CONCRETE SLAB AS OCCURS.
6. CONCRETE WALL BEYOND.

121 *BARRICADE WALL FOOTINGS*
NO SCALE

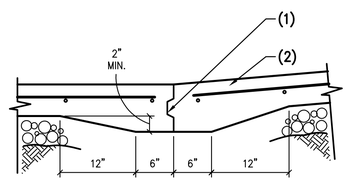

NOTES:
1. CONTINUOUS KEY – SEE TYPICAL KEY IN CONCRETE DETAIL.
2. CONCRETE SLAB ON GRADE.

119 *RAMP AT CONCRETE SLAB ON GRADE*
NO SCALE

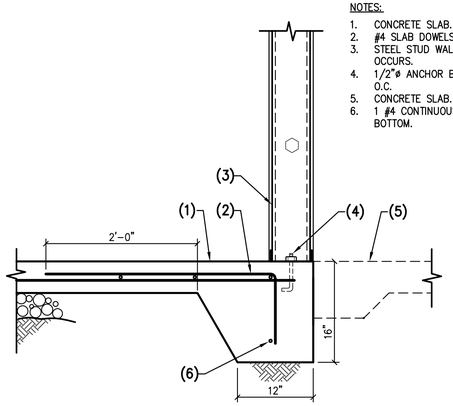

NOTES:
1. CONCRETE SLAB.
2. #4 SLAB DOWELS AT 16" O.C.
3. STEEL STUD WALL WHERE OCCURS.
4. 1/2"ø ANCHOR BOLTS AT 48" O.C.
5. CONCRETE SLAB.
6. 1 #4 CONTINUOUS TOP AND BOTTOM.

117 *CONCRETE TURNDOWN*
NO SCALE

PK ASSOCIATES, LLC
6900 E. Belleview Ave. Suite 200
Greenwood Village, CO 80111
Phone: (720) 799.1058
Email: cadd@pkastructural.com
Website: www.pkastructural.com
Proj Num: 25113

Registered Professional Engineer (Civil) CERTIFICATE NO. 70374 JAMES APPLEYARD Date Signed 1/9/26 ARIZONA, U.S.A.

Issue Date:	10 JULY 2026		
Revisions:	#	Description	Date

gabor lorant architects
3326 n. 3rd avenue suite 200
phoenix, arizona 85013
tel: 602.667.9090
fax: 602.667.9133
gaborlorant.com

gla Project No.: 24102

gla

ARIZONA DEPARTMENT OF TRANSPORTATION
PROJECT DELIVERY AND OPERATIONS DIVISION
PROJECT MANAGEMENT GROUP

SAN SIMON PORT OF ENTRY
FOUNDATION DETAILS

ROUTE	MILEPOST	STRUCTURE NO.
I-10	383	

F.H.W.A Arizona Division

STATE	PROJECT NO.	FEDERAL ID NO.	SHEET NO.	TOTAL SHEETS	RECORD DRAWING
ARIZ.	010 CH 383	010-F(238)T	129	200	

LOCATION: SAN SIMON PORT OF ENTRY (POE)

TRACS NO. F0728 01 C

DWG NO. **S202**

___ OF ___

DO NOT SCALE DRAWINGS. DO NOT PLOT "SCALE TO FIT". THIS DOCUMENT IS FORMATTED FOR THE ANSI D (22"x34") SHEET SIZE.
FULL-SIZE PLOT ON ANSI D (22"x34") PAPER ONLY. HALF-SIZE PLOT ON 11"x17" PAPER ONLY.

STAPLE ZONE

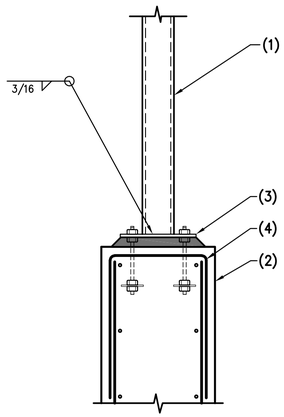

NOTES:
1. STEEL COLUMN.
2. CONCRETE WALL.
3. STEEL BASE PLATE WITH DOUBLE NUTS OVER 2"± DRYPACK.
4. 3– #5 "U" BAR W/ 24" LEGS AT 12" O.C. CENTERED UNDER COLUMN.

128 *STEEL COLUMN AT CONCRETE WALL*
NO SCALE

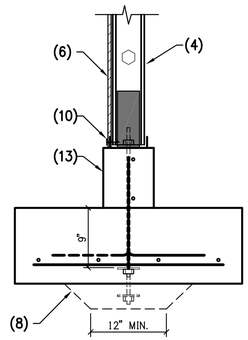

NOTES:
1. CONCRETE SLAB ON GRADE.
2. BOTTOM TRACK.
3. SCREW SHEAR WALL SHEATHING TO FIRST (2)– END STUDS THE SAME AS INDICATED ON THE SHEAR WALL SCHEDULE FOR FASTENER TYPE AND SPACING AT PANEL EDGES.
4. POST PER SHEAR WALL SCHEDULE.
5. HOLDOWN, SEE SHEAR WALL SCHEDULE.
6. SHEAR WALL SHEATHING.
7. FIELD NAILING PER SHEAR WALL SCHEDULE.
8. ALL ANCHOR BOLTS MUST MAINTAIN 3" CLEAR MINIMUM TO BOTTOM OF BOLT, OVER–EXCAVATE FOOTING AS REQUIRED TO MAINTAIN CLEARANCES.
9. DOWELS AS REQUIRED PER TYPICAL CONCRETE DETAILS.
10. EDGE SCREW SPACING PER SHEAR WALL SCHEDULE.
11. PROVIDE BLOCKING AT PANEL EDGES.
12. ANCHOR BOLT PER "TYPICAL SIMPSON HOLDOWN REQUIREMENTS" DETAIL.
13. CONCRETE STEM WALL OR TURNDOWN AS OCCURS.
14. CONCRETE FOUNDATION PER PLAN.

X *SECTION VIEW – HOLDOWN*

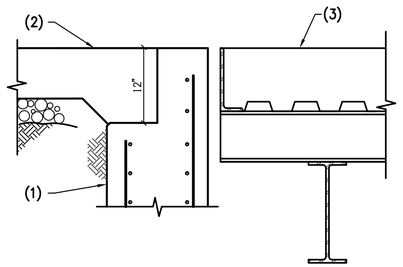

NOTES:
1. CONCRETE WALL.
2. CONCRETE SLAB BY OTHERS.
3. SCALE SLAB AND FRAMING PER SCALE DESIGNER.

125 *CONCRETE SLAB AT PIT WALL*
NO SCALE

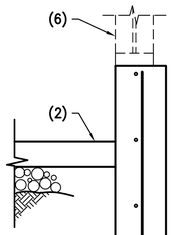

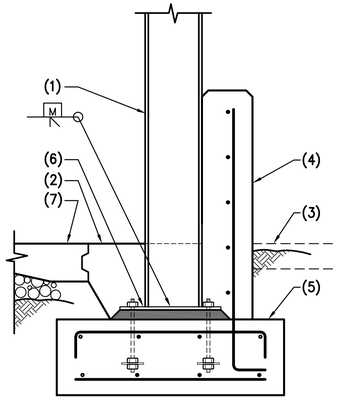

NOTES:
1. STEEL COLUMN.
2. CONCRETE CLOSURE POUR PER TYPICAL DETAIL.
3. FINISHED GRADE OR CONCRETE SLAB AS OCCURS.
4. CONCRETE WALL.
5. CONCRETE FOOTING.
6. STEEL BASE PLATE WITH WITH DOUBLE NUTS OVER 1 1/2"± DRYPACK.
7. CONCRETE SLAB ON GRADE.

129 *EXTERIOR STEEL COLUMN FOOTING AT CONCRETE WALL*
NO SCALE

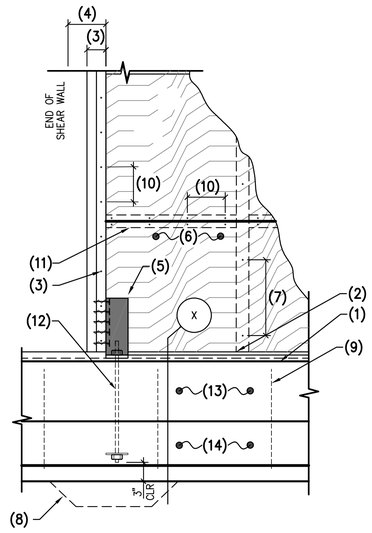

127 *TYPICAL – HOLDOWN POST AT CONVENTIONAL FOUNDATION*
NO SCALE

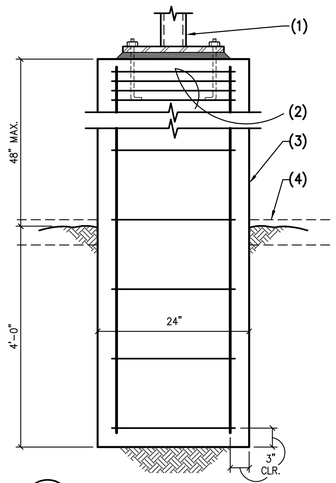

NOTES:
1. WEIGHT SCALE SCOREBOARD, BASEPLATE, AND ANCHOR BOLTS BY OTHERS.
2. 4– #3 TIES IN TOP 5".
3. CONCRETE BASE W/ 8– #5 VERTICALS AND #3 TIES AT 12" O.C., VERTICALLY (CONCRETE STRENGTH = 3000 PSI).
4. FINISHED GRADE OR CONCRETE SLAB AS OCCURS.

126 *WEIGH SCALE SCOREBOARD BASE DETAIL*
NO SCALE

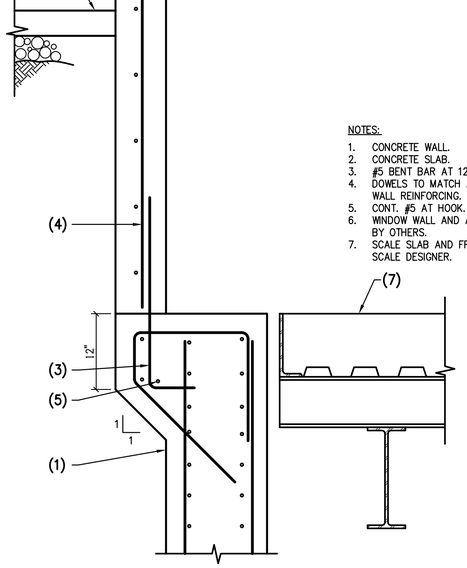

NOTES:
1. CONCRETE WALL.
2. CONCRETE SLAB.
3. #5 BENT BAR AT 12" O.C.
4. DOWELS TO MATCH AND LAP WALL REINFORCING.
5. CONT. #5 AT HOOK.
6. WINDOW WALL AND ATTACHMENT BY OTHERS.
7. SCALE SLAB AND FRAMING PER SCALE DESIGNER.

124 *CONCRETE WALL AT PIT WALL*
NO SCALE

PK ASSOCIATES, LLC
6900 E. Belleview Ave. Suite 200
Greenwood Village, CO 80111
Phone: (720) 799.1058
Email: cadd@pkastructural.com
Website: www.pkastructural.com
Proj Num: 25113

Registered Professional Engineer (Civil) CERTIFICATE NO. 70374 JAMES APPLEYARD Date Signed 6/30/26 ARIZONA, U.S.A.

Issue Date:	10 JULY 2026	
Revisions:	Δ Description	Date

gabor lorant architects
3326 n. 3rd avenue suite 200
phoenix, arizona 85013
tel: 602.667.9090
fax: 602.667.9133
gaborlorant.com
gla Project No.: 24102

ARIZONA DEPARTMENT OF TRANSPORTATION
PROJECT DELIVERY AND OPERATIONS DIVISION
PROJECT MANAGEMENT GROUP
SAN SIMON PORT OF ENTRY
FOUNDATION DETAILS

ROUTE	I-10
MILEPOST	383
STRUCTURE NO.	

F.H.W.A Arizona Division

STATE	PROJECT NO.	FEDERAL ID NO.	SHEET NO.	TOTAL SHEETS	RECORD DRAWING
ARIZ.	010 CH 383	010-F(238)T	130	200	

LOCATION: SAN SIMON PORT OF ENTRY (POE)

TRACS NO. F0728 01 C

DWG NO. **S203**
____ OF ____

DO NOT SCALE DRAWINGS. DO NOT PLOT "SCALE TO FIT". THIS DOCUMENT IS FORMATTED FOR THE ANSI D (22"x34") SHEET SIZE.
FULL-SIZE PLOT ON ANSI D (22"x34") PAPER ONLY. HALF-SIZE PLOT ON 11"x17" PAPER ONLY.

STAPLE ZONE

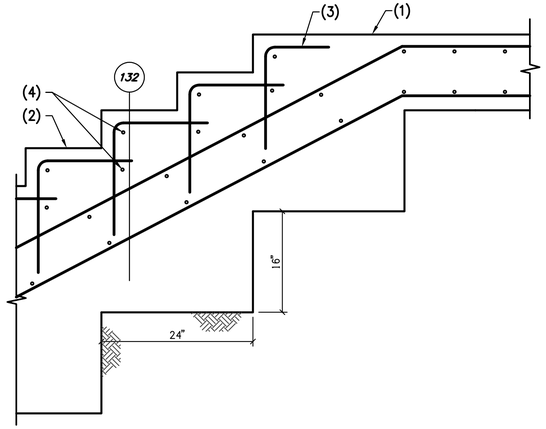

NOTES:
1. CONCRETE SLAB.
2. CONCRETE STAIRS..
3. #4X20"X20" AT 12" O.C.
4. CONT. #4.

133 *CONCRETE STAIR AT CONCRETE SLAB*
NO SCALE

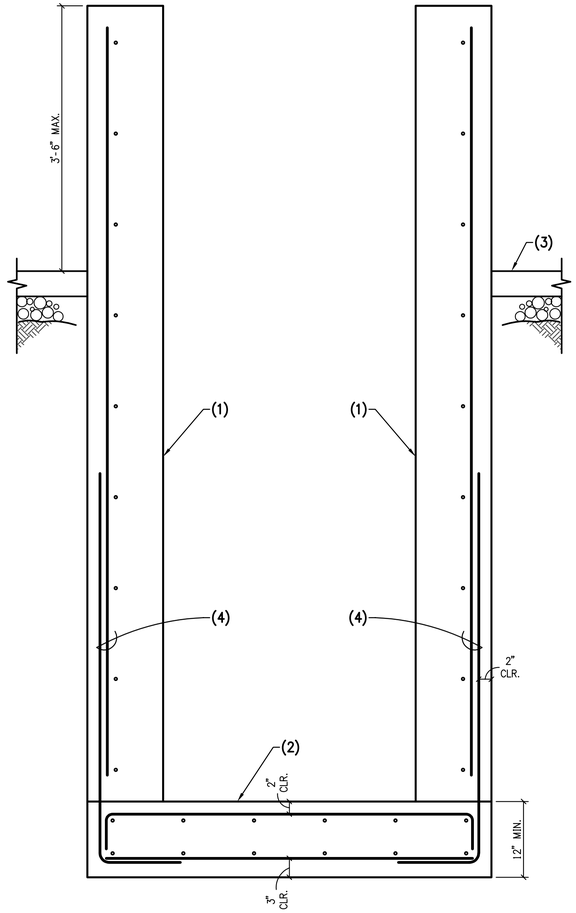

NOTES:
1. 8" CONCRETE WALL WITH #5 AT 12" O.C. E.W.
2. CONCRETE SLAB WITH #5 AT 12" O.C. E.W. TOP AND BOTTOM.
3. CONCRETE SLAB OR FINISHED GRADE AS OCCURS.
4. DOWELS TO MATCH AND LAP WALL REINFORCING.

132 *CONCRETE WALL AT CONCRETE STAIRS*
NO SCALE

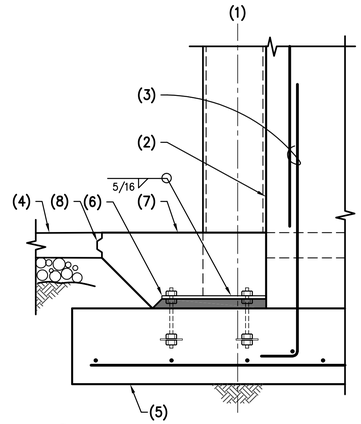

NOTES:
1. CENTERLINE OF STEEL COLUMN.
2. CONCRETE WALL.
3. LAP PER GSN.
4. CONCRETE SLAB ON GRADE.
5. CONCRETE FOOTING.
6. STEEL BASE PLATE WITH DOUBLE NUTS OVER 1 1/2"± DRYPACK.
7. CONCRETE CLOSURE POUR PER TYPICAL DETAIL.
8. KEY PER TYP. DETAIL

130 *STEEL COLUMN AT CONCRETE WALL*
NO SCALE

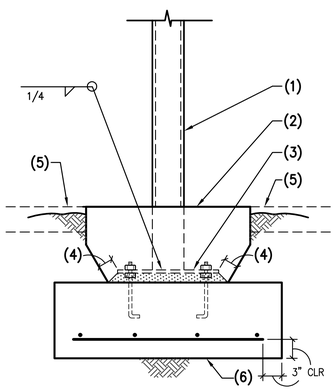

NOTES:
1. STEEL COLUMN.
2. CONCRETE CLOSURE POUR AROUND COLUMN.
3. STEEL BASE PLATE WITH DOUBLE NUTS OVER 1 1/2"± DRYPACK.
4. 3" MIN CONCRETE COVER ALL AROUND STEEL BELOW GRADE.
5. CONCRETE SLAB OR FINISHED GRADE AS OCCURS.
6. CONCRETE FOOTING.

135 *EXTERIOR STEEL COLUMN FOOTING*
NO SCALE

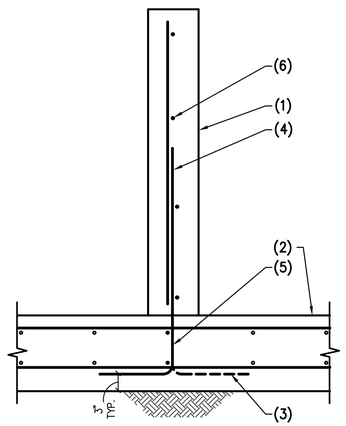

NOTES:
1. CONCRETE WALL. SEE PLAN FOR THICKNESS.
2. CONCRETE SLAB.
3. ALTERNATE BENDS.
4. VERTICAL REINFORCING PER PLAN.
5. DOWELS TO MATCH AND LAP VERTICAL WALL REINFORCING PER G.S.N.
6. HORIZONTAL REINFORCING PER PLAN.

134 *CONCRETE WALL AT CONCRETE SLAB*
NO SCALE

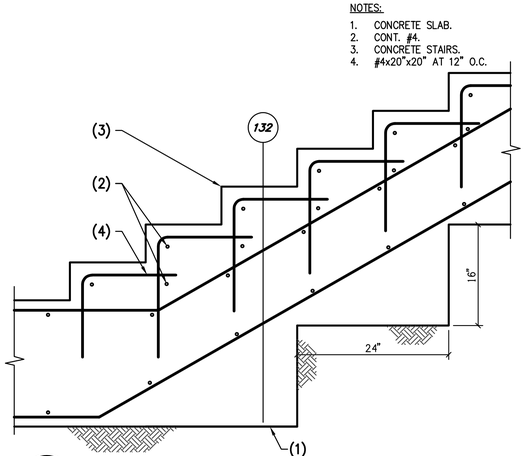

NOTES:
1. CONCRETE SLAB.
2. CONT. #4.
3. CONCRETE STAIRS.
4. #4x20"x20" AT 12" O.C.

131 *BOTTOM OF CONCRETE STAIR AT CONCRETE SLAB*
NO SCALE

PK ASSOCIATES, LLC
6900 E. Belleview Ave. Suite 200
Greenwood Village, CO 80111
Phone: (720) 799.1058
Email: cadd@pkastructural.com
Website: www.pkastructural.com
Proj Num: 25113

Registered Professional Engineer (Civil) CERTIFICATE NO. 70374 JAMES APPLEYARD Date Signed 4/10/26 ARIZONA, U.S.A.

Issue Date:	10 JULY 2026		
Revisions:	#	Description	Date

gabor lorant architects
3326 n. 3rd avenue suite 200
phoenix, arizona 85013
tel: 602.667.9090
fax: 602.667.9133
gaborlorant.com
gla Project No.: 24102

ARIZONA DEPARTMENT OF TRANSPORTATION
PROJECT DELIVERY AND OPERATIONS DIVISION
PROJECT MANAGEMENT GROUP

SAN SIMON PORT OF ENTRY
FOUNDATION DETAILS

ROUTE I-10	F.H.W.A Arizona Division	STATE	PROJECT NO.	FEDERAL ID NO.	SHEET NO.	TOTAL SHEETS	RECORD DRAWING
MILEPOST 383		ARIZ.	010 CH 383	010-F(238)T	131	200	
STRUCTURE NO.	LOCATION SAN SIMON PORT OF ENTRY (POE)					DWG NO. **S204**	
	TRACS NO. F0728 01 C					___ OF ___	

DO NOT SCALE DRAWINGS. DO NOT PLOT "SCALE TO FIT". THIS DOCUMENT IS FORMATTED FOR THE ANSI D (22"x34") SHEET SIZE.
FULL-SIZE PLOT ON ANSI D (22"x34") PAPER ONLY. HALF-SIZE PLOT ON 11"x17" PAPER ONLY.

STAPLE ZONE

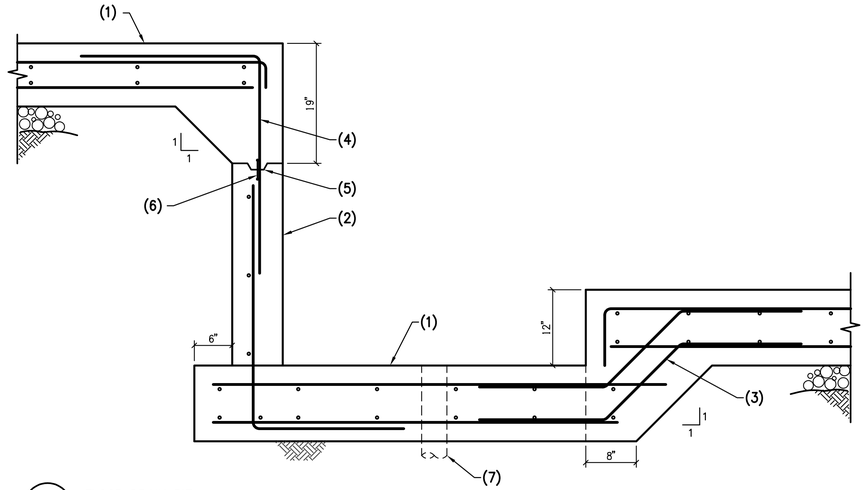

NOTES:

1. CONCRETE MAT SLAB.
2. CONCRETE WALL.
3. "Z" BAR TO LAP AND MATCH SLAB REINFORCING.
4. DOWELS TO MATCH AND LAP WALL REINFORCING.
5. CONC. KEY PER TYPICAL DETAIL
6. WATER STOP PER ARCH'L.
7. FLOOR DRAIN PIPING.

136 *FLOOR DRAIN PIT*

NO SCALE

PK ASSOCIATES, LLC
6900 E. Belleview Ave. Suite 200
Greenwood Village, CO 80111
Phone: (720) 799.1058
Email: cadd@pkastructural.com
Website: www.pkastructural.com
Proj Num: 25113

Registered Professional Engineer (Civil) CERTIFICATE NO. 70374 JAMES APPLEYARD Date Signed 6/30/26 ARIZONA, U.S.A.

Issue Date:	10 JULY 2026		
Revisions:	#	Description	Date

gabor lorant architects
3326 n. 3rd avenue suite 200
phoenix, arizona 85013
tel: 602.667.9090
fax: 602.667.9133
gaborlorant.com

gla Project No.: 24102

ARIZONA DEPARTMENT OF TRANSPORTATION
PROJECT DELIVERY AND OPERATIONS DIVISION
PROJECT MANAGEMENT GROUP

SAN SIMON PORT OF ENTRY
FOUNDATION DETAILS

ROUTE	MILEPOST	STRUCTURE NO.
I-10	383	

F.H.W.A Arizona Division

STATE	PROJECT NO.	FEDERAL ID NO.	SHEET NO.	TOTAL SHEETS	RECORD DRAWING
ARIZ.	010 CH 383	010-F(238)T	132	200	

LOCATION: SAN SIMON PORT OF ENTRY (POE)

TRACS NO. F0728 01 C

DWG NO. **S205**

____ OF ____

DO NOT SCALE DRAWINGS. DO NOT PLOT "SCALE TO FIT". THIS DOCUMENT IS FORMATTED FOR THE ANSI D (22"x34") SHEET SIZE.
FULL-SIZE PLOT ON ANSI D (22"x34") PAPER ONLY. HALF-SIZE PLOT ON 11"x17" PAPER ONLY.

STAPLE ZONE

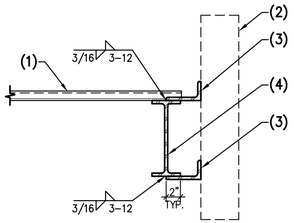

NOTES:
1. STEEL DECK.
2. STEEL STUD FASCIA – SEE ARCH'L DWG'S.
3. CONTINUOUS 1/4" STEEL ANGLE OR BENT PLATE x ___ 3"
4. STEEL BEAM.

207 *FASCIA AT ROOF EDGE BEAM*
NO SCALE

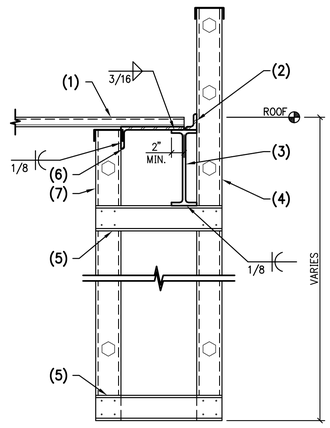

NOTES:
1. STEEL DECK PER PLAN.
2. PERIMETER STEEL ANGLE (BENT PLATE).
3. STEEL BEAM.
4. 3 5/8"x16 GAGE STEEL STUD FRAMING AT 16" O.C.
5. 3 5/8"x16 GAGE HORIZONTAL STEEL STUDS AT 32" O.C. – PLACE FIRST STUD DIRECTLY UNDER BEAM AND LAST STUD AT BOTTOM OF SOFFIT. CONECT W/ 4 #10 SCREWS AT ALL INTERSECTIONS.
6. 1/2"x6" ___ x3"
   LONG BENT PLATE – LOCATE AT EACH STUD.
7. 6"x16GA STEEL STUD FRAMING AT 16" O.C.

205 *EXTERIOR SOFFIT FRAMING*
NO SCALE

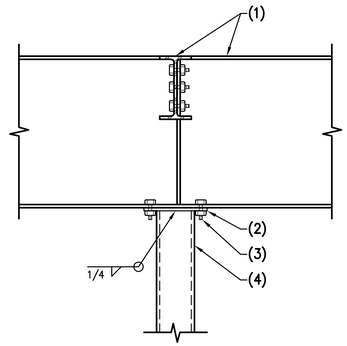

NOTES:
1. STEEL BEAM FOR BEAM TO BEAM CONNECTION, SEE DETAIL 201.
2. 3/4"ø A325 BOLT (4 TOTAL).
3. 1/2"THICK STEEL CAP PLATE.
4. STEEL COLUMN.

203 *STEEL BEAM AT STEEL COLUMN*
NO SCALE

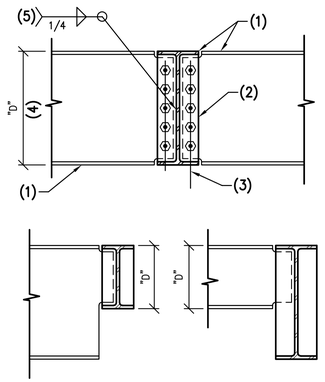

NOTES:
1. STEEL BEAM.
2. 3/8" STEEL SHEAR PLATE –USE 5/8" STEEL SHEAR PLATE WHERE "D" = 27" OR GREATER.
3. FOR SIZE, TYPE & NUMBER OF BOLTS, SEE TYPICAL BOLT SCHEDULE.
4. "D" = LESSER OF BEAM DEPTHS AS OCCURS.
5. WELD 3 SIDES TYPICAL – USE SAME CONNECTION AT STIFFENER PLATES WHEN REQUIRED.

NOTE:
AT ONE SIDED CONNECTIONS, INSTALL 3/8" STIFFENER PLATE OPPOSITE SHEAR PLATE.

201 *TYPICAL CONNECTION WIDE FLANGE BEAM TO BEAM*
NO SCALE

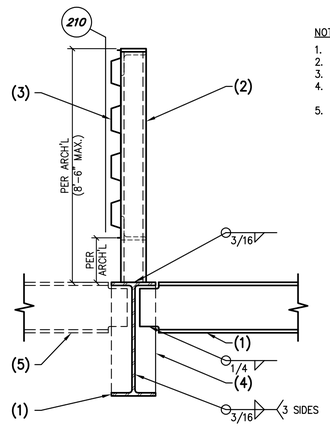

NOTES:
1. STEEL BEAM.
2. STEEL POST.
3. 1 1/2"x 20GA. STEEL DECK.
4. 3/8" STEEL SHEAR TAB EACH SIDE OF BEAM.
5. STEEL BEAM EACH SIDE AS OCCURS.

208 *STEEL POST AT STEEL BEAM*
NO SCALE

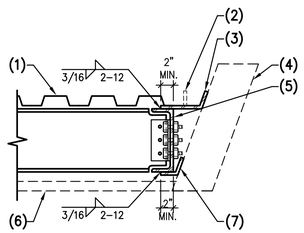

NOTES:
1. STEEL DECK.
2. 1/2"ø x3" LONG AUTOMATICALLY WELDED THREADED STUDS AT 48" O.C.
3. CONTINUOUS 1/4" BENT STEEL PLATE x
   3"
4. STEEL STUD FASCIA – SEE ARCH'L DWG'S.
5. STEEL CHANNEL STRUCTURAL FASCIA – FOR CHANNEL TO BEAM CONNECTION, SEE DETAIL 201.
6. SOFFIT PANEL – SEE ARCH'L. DWG'S.
7. 1/4" BENT STEEL PLATE W/ 3" LEGS MINIMUM.

206 *FASCIA AT STEEL BEAM*
NO SCALE

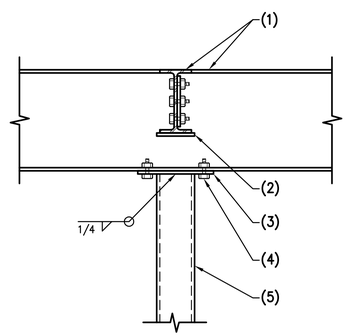

NOTES:
1. STEEL BEAM.
2. STEEL CONTINUITY PLATE.
3. 1/2" STEEL CAP PLATE.
4. 3/4"ø A325 BOLT.
5. STEEL COLUMN.

204 *STEEL BEAM AT STEEL COLUMN*
NO SCALE

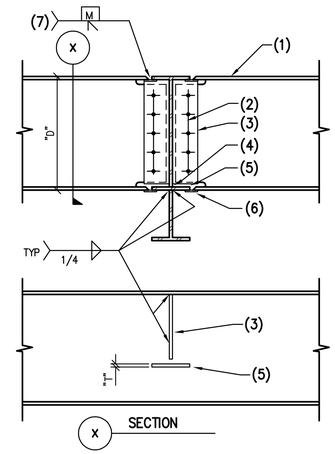

NOTES:
1. STEEL BEAM.
2. FOR SIZE, TYPE AND NUMBER OF BOLTS, SEE TYPICAL BOLT SCHEDULE.
3. 3/8" STEEL SHEAR PLATE – 5/8" STEEL SHEAR PLATE WHERE "D" = 27" OR GREATER.
4. SLOT BEAM WEB.
5. STEEL PLATE WIDTH OF BEAM FLANGE.
6. 1/8" STEEL BACKER PLATE.
7. WELD TOP AND BOTTOM FLANGE – TYPICAL.

202 *TYPICAL MOMENT CONNECTION – WIDE FLANGE BEAM TO BEAM*
NO SCALE

PK ASSOCIATES, LLC
6900 E. Belleview Ave. Suite 200
Greenwood Village, CO 80111
Phone: (720) 799.1058
Email: cadd@pkastructural.com
Website: www.pkastructural.com
Proj Num: 25113

Registered Professional Engineer (Civil) CERTIFICATE NO. 70374 JAMES APPLEYARD Date Signed 1/9/26 ARIZONA, U.S.A.

Issue Date:	10 JULY 2026		
Revisions:	#	Description	Date

gabor lorant architects
3326 n. 3rd avenue suite 200
phoenix, arizona 85013
tel: 602.667.9090
fax: 602.667.9133
gaborlorant.com

gla Project No.: 24102

gla

ARIZONA DEPARTMENT OF TRANSPORTATION
PROJECT DELIVERY AND OPERATIONS DIVISION
PROJECT MANAGEMENT GROUP

SAN SIMON PORT OF ENTRY
FRAMING DETAILS

ROUTE	MILEPOST	STRUCTURE NO.
I-10	383	

F.H.W.A Arizona Division

STATE	PROJECT NO.	FEDERAL ID NO.	SHEET NO.	TOTAL SHEETS	RECORD DRAWING
ARIZ.	010 CH 383	010-F(238)T	133	200	

LOCATION: SAN SIMON PORT OF ENTRY (POE)

TRACS NO. F0728 01 C

DWG NO. **S300**

___ OF ___

DO NOT SCALE DRAWINGS. DO NOT PLOT "SCALE TO FIT". THIS DOCUMENT IS FORMATTED FOR THE ANSI D (22"x34") SHEET SIZE.
FULL-SIZE PLOT ON ANSI D (22"x34") PAPER ONLY. HALF-SIZE PLOT ON 11"x17" PAPER ONLY.

STAPLE ZONE

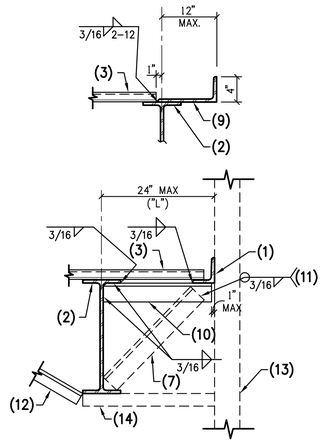

NOTES:
1. CONTINUOUS STEEL ANGLE 4x4x1/4.
2. TOP FLANGE OF STEEL BEAM OR JOIST/JOIST GIRDER.
3. STEEL DECK – FOR DIRECTION OF DECK, SEE PLANS.
4. TO MATCH JOIST DEPTH.
5. 1/4" BENT STEEL INVERTED "U" PLATE BETWEEN JOISTS. AS SPECIFIED ON PLANS.
6. LINE OF STEEL JOIST BEYOND.
7. PROVIDE STEEL ANGLE BRACE WHERE "L" ≥20".(PROVIDE ANGLE BRACE AT HORIZ. ANGLE AT 311A.
8. CONTINUOUS STEEL ANGLE 4x4x3/8.
9. CONT. 1/4" STEEL BENT PLATE.
10. 2 1/2"x2 1/2"x1/4" STEEL ANGLE AT 2'–0" O.C.
11. TYP. EACH END.
12. PROVIDE 2 1/2"x2 1/2"x1/4" AT 4'–0" O.C. TO ADJACENT JOIST/BEAM TOP CHORD.
13. STEEL STUD WALL.
14. STUD BRACE PER TYPICAL DETAIL.

215 *TYPICAL DECK EDGE AT ROOF*
NO SCALE

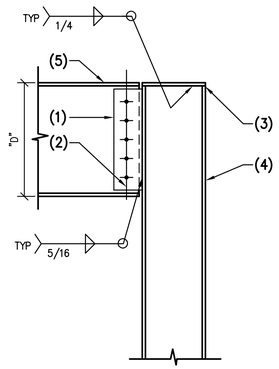

NOTES:
1. 3/8" STEEL SHEAR PLATE – 5/8" STEEL SHEAR PLATE WHERE "D" = 27" OR GREATER.
2. FOR SIZE, TYPE AND NUMBER OF BOLTS, SEE TYPICAL BOLT SCHEDULE.
3. 1/2" CAP PLATE – TYPICAL.
4. STEEL COLUMN.
5. STEEL BEAM.

213 *TYPICAL SHEAR CONNECTION – STEEL BEAM TO STEEL COLUMN*
NO SCALE

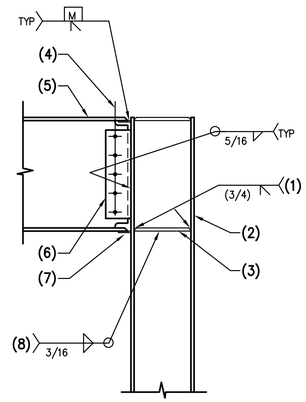

NOTES:
1. WELD EACH PLATE.
2. STEEL COLUMN.
3. 1" STEEL PLATE TOP AND BOTTOM – EACH SIDE OF WEB.
4. FOR SIZE, TYPE AND NUMBER OF BOLTS, SEE TYPICAL BOLT SCHEDULE.
5. STEEL BEAM.
6. SHEAR PLATE PER TYPICAL CONNECTION DETAIL.
7. STEEL BACKER PLATE.
8. WELD 3 SIDES TYPICAL.

211 *TYPICAL MOMENT CONNECTION – STEEL BEAM TO STEEL COLUMN*
NO SCALE

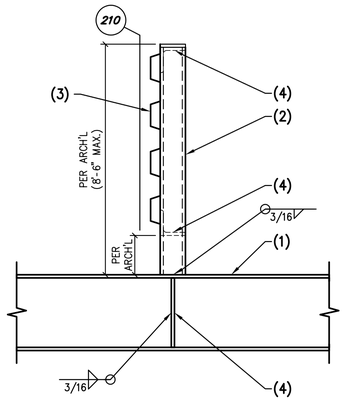

NOTES:
1. STEEL BEAM.
2. STEEL POST.
3. 1 1/2"x20 GAGE STEEL DECK.
4. 3/8" STEEL SHEAR TAB EACH SIDE OF BEAM.

209 *STEEL POST AT STEEL BEAM*
NO SCALE

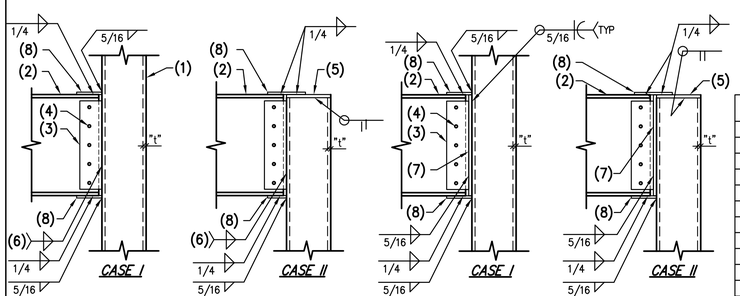

MINIMUM COLUMN FLANGE THICKNESS FOR DETAIL X	
HSS MEMBER	THICKNESS ("t")
4x4	1/4"
5x5	1/4"
6x6	1/4"
7x7	1/4"
8x8	5/16"
9x9	5/16"
10x10	3/8"
12x12	3/8"
14x14	1/2"
16x16	1/2"

NOTES:
1. HSS SQUARE OR RECTANGULAR COLUMN.
2. STEEL BEAM.
3. STEEL SHEAR PLATE. SEE TYP. BOLT SCHEDULE. PROVIDE DOUBLE SHEAR PLATE AT HSS AND TS BEAMS.
4. FOR SIZE, TYPE, AND NUMBER OF BOLTS, REFER TO TYP. BOLT. SCHEDULE.
5. 1/2" STEEL CAP PLATE.
6. AT t ≤ 1/4" USE FILLET WELD SIZE TO MATCH "t". AT t > 1/4" USE 5/16" FILLET.
7. 1/2" STEEL BACKER PLATE x BEAM DEPTH x WIDTH OF COLUMN LESS 1".
8. 1/2x3x6" STEEL PLATE AT 214A.

NOTES:
-DETAIL Y MAY BE USED TYP. U.N.O.
-DETAIL X MAY BE USED AT CONTRACTOR'S OPTION WHERE HSS MIN. FLANGE THICKNESSES ARE MET PER SCHEDULE.
-WHERE COLUMNS ARE RECTANGULAR IN LIEU OF SQUARE, THE GREATER FLANGE LENGTH (I.E. WORST CASE) APPLIES PER SCHEDULE.
-CONTRACTOR MAY INCREASE PLAN COLUMN THICKNESS AT THEIR OPTION.

X *SHEAR PLATE TO COLUMN*
Y *SHEAR PLATE TO BACKER PLATE TO COLUMN*

214 *TYPICAL BEAM TO HSS STEEL COLUMN*
214 *AS NOTED*
NO SCALE

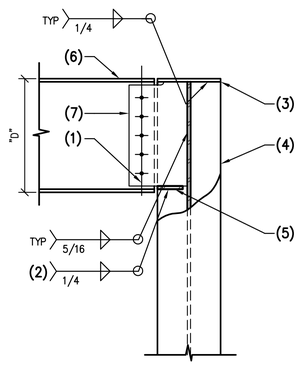

NOTES:
1. FOR SIZE, TYPE AND NUMBER OF BOLTS, SEE TYPICAL BOLT SCHEDULE.
2. WELD PLATE TO COLUMN FLANGE – TYPICAL.
3. 1/2" CAP PLATE – TYPICAL.
4. STEEL COLUMN.
5. 1/2" THICK HORIZONTAL STIFFENER PLATE – TYPICAL.
6. STEEL BEAM.
7. 3/8" STEEL SHEAR PLATE – 5/8" STEEL SHEAR PLATE WHERE "D" = 27" OR GREATER.
8. FOR SIZE, TYPE AND NUMBER OF BOLTS, SEE TYPICAL BOLT SCHEDULE.

212 *TYPICAL SHEAR CONNECTION – STEEL BEAM TO STEEL COLUMN*
NO SCALE

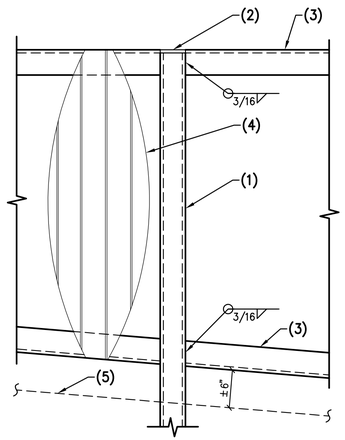

NOTES:
1. STEEL BEAM.
2. 1/4" STEEL CAP PLATE. BUTTWELD ALL AROUND.
3. STEEL ANGLE.
4. 1 1/2" x 20 GAGE STEEL DECK.
5. ROOF FINISH PER ARCH'L.

210 *RTU ENCLOSURE STEEL FRAMING*
NO SCALE

PK ASSOCIATES, LLC
6900 E. Belleview Ave. Suite 200
Greenwood Village, CO 80111
Phone: (720) 799.1058
Email: cadd@pkastructural.com
Website: www.pkastructural.com
Proj Num: 25113

Registered Professional Engineer (Civil) CERTIFICATE NO. 70374 JAMES APPLEYARD Date Signed 6/19/26 ARIZONA, U.S.A.

Issue Date:	10 JULY 2026		
Revisions:	#	Description	Date

gabor lorant architects
3326 n. 3rd avenue suite 200
phoenix, arizona 85013
tel: 602.667.9090
fax: 602.667.9133
gaborlorant.com

gla Project No.: 24102

gla

ARIZONA DEPARTMENT OF TRANSPORTATION
PROJECT DELIVERY AND OPERATIONS DIVISION
PROJECT MANAGEMENT GROUP

SAN SIMON PORT OF ENTRY
FRAMING DETAILS

ROUTE	STATE	PROJECT NO.	FEDERAL ID NO.	SHEET NO.	TOTAL SHEETS	RECORD DRAWING
I-10	ARIZ.	010 CH 383	010-F(238)T	134	200	
MILEPOST 383	F.H.W.A Arizona Division					
STRUCTURE NO.	LOCATION: SAN SIMON PORT OF ENTRY (POE)					DWG NO. S301
	TRACS NO. F0728 01 C					___ OF ___

DO NOT SCALE DRAWINGS. DO NOT PLOT "SCALE TO FIT". THIS DOCUMENT IS FORMATTED FOR THE ANSI D (22"x34") SHEET SIZE.
FULL-SIZE PLOT ON ANSI D (22"x34") PAPER ONLY. HALF-SIZE PLOT ON 11"x17" PAPER ONLY.

STAPLE ZONE

NOTES:

1. CONTINUOUS STEEL ANGLE 4x4x1/4.
2. STEEL BEAM.
3. STEEL DECK – FOR DIRECTION OF DECK, SEE PLANS.

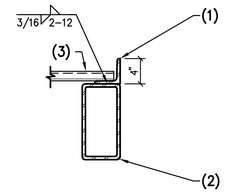

216 *STEEL DECK EDGE AT HSS STEEL BEAM*

NO SCALE

NOTES:

1. STEEL COLUMN.
2. STEEL BEAM.

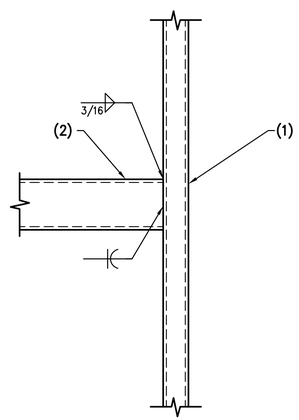

217 *STEEL BEAM AT STEEL COLUMN*

NO SCALE

PK ASSOCIATES, LLC
6900 E. Belleview Ave. Suite 200
Greenwood Village, CO 80111
Phone: (720) 799.1058
Email: cadd@pkastructural.com
Website: www.pkastructural.com
Proj Num: 25113

Registered Professional Engineer (Civil) CERTIFICATE NO. 70374 JAMES APPLEYARD Date Signed 1/29/26 ARIZONA, U.S.A.

Issue Date:	10 JULY 2026		
Revisions:	#	Description	Date

gla Project No.: 24102
gabor lorant architects
3326 n. 3rd avenue suite 200
phoenix, arizona 85013
tel: 602.667.9090
fax: 602.667.9133
gaborlorant.com
gla

ARIZONA DEPARTMENT OF TRANSPORTATION
PROJECT DELIVERY AND OPERATIONS DIVISION
PROJECT MANAGEMENT GROUP

SAN SIMON PORT OF ENTRY
FRAMING DETAILS

ROUTE	MILEPOST	STRUCTURE NO.
I-10	383	

F.H.W.A Arizona Division

STATE	PROJECT NO.	FEDERAL ID NO.	SHEET NO.	TOTAL SHEETS	RECORD DRAWING
ARIZ.	010 CH 383	010-F(238)T	135	200	

LOCATION: SAN SIMON PORT OF ENTRY (POE)

TRACS NO. F0728 01 C

DWG NO. **S302**

____ OF ____

DO NOT SCALE DRAWINGS. DO NOT PLOT "SCALE TO FIT". THIS DOCUMENT IS FORMATTED FOR THE ANSI D (22"x34") SHEET SIZE.
FULL-SIZE PLOT ON ANSI D (22"x34") PAPER ONLY. HALF-SIZE PLOT ON 11"x17" PAPER ONLY.

STAPLE ZONE

NOTES:
1. STEEL DIAGONAL BRACE.
2. 3/4" STEEL PLATE EACH SIDE (50 KSI).

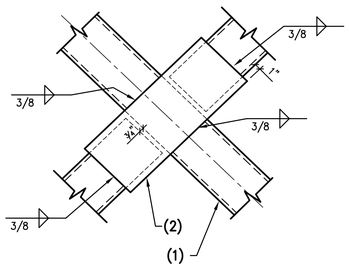

303 STEEL TUBE BRACE AT STEEL TUBE BRACE

NO SCALE

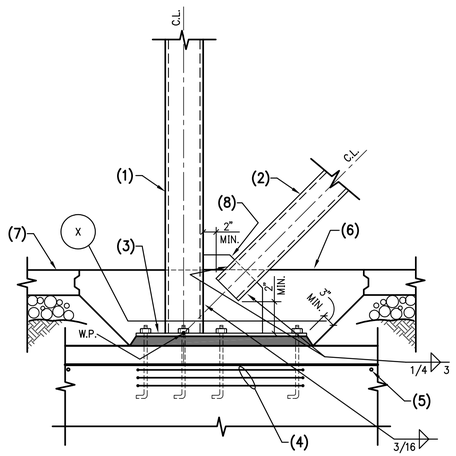

301 BRACE FRAME AT FOOTING

NO SCALE

NOTES:
1. STEEL COLUMN.
2. STEEL BRACE.
3. 1"x27"x15" STEEL PLATE W/ 9 – 1"ø ANCHOR BOLTS.
4. 3 #4 TIES.
5. FOOTING REINFORCING.
6. CONCRETE POUR BACK.
7. CONCRETE SLAB ON GRADE.
8. 3/4" STEEL GUSSET PLATE.
9. EDGE OF CONCRETE WALL ABOVE. PLACE STEEL AND FORM WALL AROUND IT.

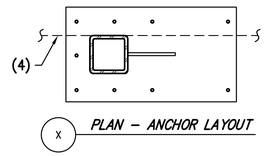

X PLAN – ANCHOR LAYOUT

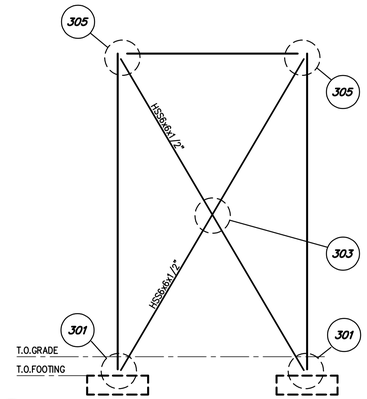

1 BRACE FRAME ELEVATION

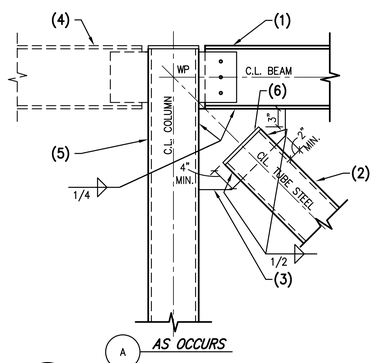

A AS OCCURS

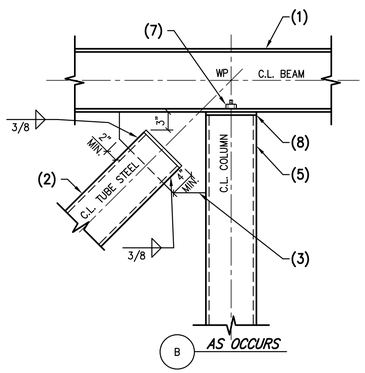

B AS OCCURS

302 STEEL FRAMING AT BRACE FRAME

NO SCALE

NOTES:
1. STEEL BEAM.
2. TUBE STEEL FRAME.
3. 3/4" STEEL GUSSET PLATE.
4. STEEL BEAM AS OCCURS.
5. STEEL COLUMN.
6. 1/4" CAP PLATE, BUTT WELD ALL AROUND.
7. 2 – 3/4"ø AUTOMATICALLY THREADED HEADED STUDS.
8. 1/4" OVERSIZED CAP PLATE. BUTT WELD ALL AROUND.

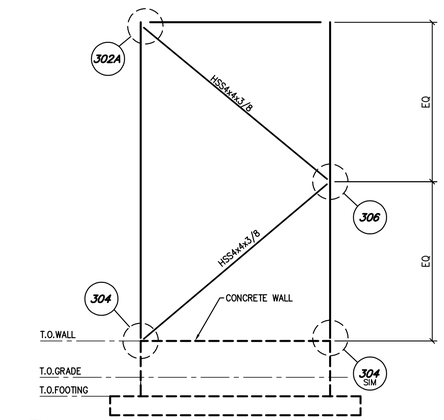

2 BRACE FRAME ELEVATION

PK ASSOCIATES, LLC
6900 E. Belleview Ave. Suite 200
Greenwood Village, CO 80111
Phone: (720) 799.1058
Email: cadd@pkastructural.com
Website: www.pkastructural.com
Proj Num: 25113

Registered Professional Engineer (Civil) CERTIFICATE NO. 70374 JAMES APPLEYARD Date Signed 6/19/26 ARIZONA, U.S.A.

Issue Date:	10 JULY 2026		
Revisions:	#	Description	Date

gabor lorant architects
3326 n. 3rd avenue suite 200
phoenix, arizona 85013
tel: 602.667.9090
fax: 602.667.9133
gaborlorant.com

gla Project No.: 24102

ARIZONA DEPARTMENT OF TRANSPORTATION
PROJECT DELIVERY AND OPERATIONS DIVISION
PROJECT MANAGEMENT GROUP

SAN SIMON PORT OF ENTRY
BRACE FRAME DETAILS

ROUTE	MILEPOST	STRUCTURE NO.
I-10	383	

F.H.W.A Arizona Division

STATE	PROJECT NO.	FEDERAL ID NO.	SHEET NO.	TOTAL SHEETS	RECORD DRAWING
ARIZ.	010 CH 383	010-F(238)T	136	200	

LOCATION: SAN SIMON PORT OF ENTRY (POE)

TRACS NO. F0728 01 C

DWG NO. **S400**

___ OF ___

DO NOT SCALE DRAWINGS. DO NOT PLOT "SCALE TO FIT". THIS DOCUMENT IS FORMATTED FOR THE ANSI D (22"x34") SHEET SIZE.
FULL-SIZE PLOT ON ANSI D (22"x34") PAPER ONLY. HALF-SIZE PLOT ON 11"x17" PAPER ONLY.

STAPLE ZONE

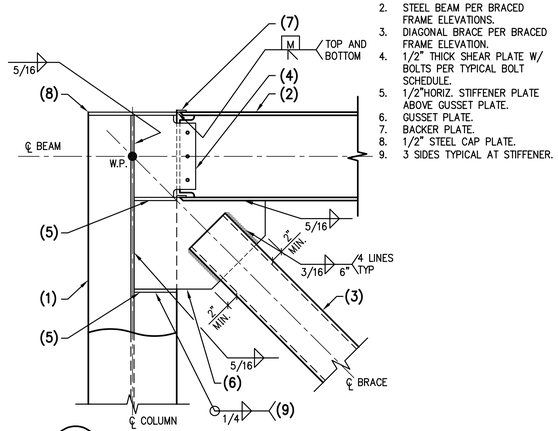

NOTES:
1. STEEL COLUMN.
2. STEEL BEAM PER BRACED FRAME ELEVATIONS.
3. DIAGONAL BRACE PER BRACED FRAME ELEVATION.
4. 1/2" THICK SHEAR PLATE W/ BOLTS PER TYPICAL BOLT SCHEDULE.
5. 1/2"HORIZ. STIFFENER PLATE ABOVE GUSSET PLATE.
6. GUSSET PLATE.
7. BACKER PLATE.
8. 1/2" STEEL CAP PLATE.
9. 3 SIDES TYPICAL AT STIFFENER.

305 *BRACE FRAME CONNECTION – SINGLE SIDED*

NO SCALE

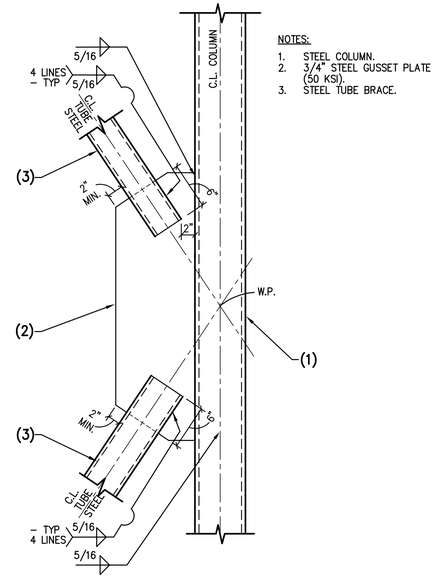

NOTES:
1. STEEL COLUMN.
2. 3/4" STEEL GUSSET PLATE (50 KSI).
3. STEEL TUBE BRACE.

306 *BRACE FRAME CONNECTION AT COLUMN WEB*

NO SCALE

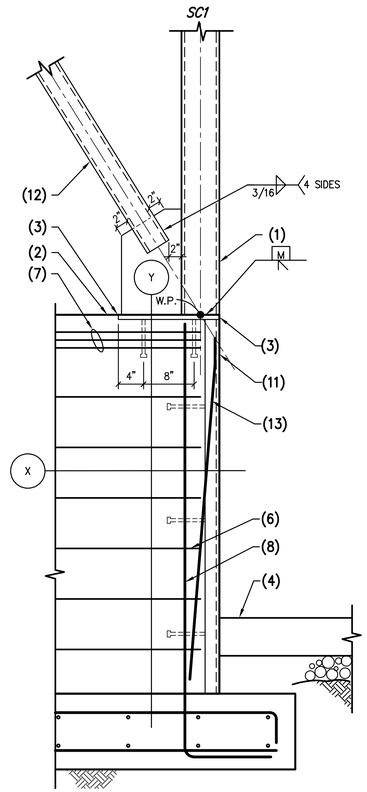

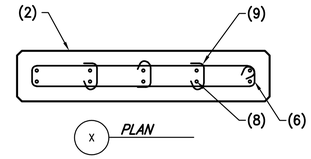

NOTES:
1. STEEL COLUMN.
2. CONCRETE WALL.
3. 3/4"x8"x16" STEEL PLATE WITH 4– 1/2" H.S. AT 3" O.C. AND 2– #7X54" LONG A706 WELDABLE REBAR AT 3" O.C.
4. CONCRETE SLAB.
5. CONCRETE FOOTING.
6. #4 TIES AT 6" O.C.
7. 3 TIES IN TOP 6".
8. 8– #5 VERTICALS.
9. #4 TIE W/ 90° BEND AND 135° BEND. ALTERNATE LOCATIONS OF BEND.
10. #5 "U" BAR W/ 24" LEGS TO LAP WITH VERTICAL BAR.
11. C8X11.5 STEEL CHANNEL WITH 1/2"ø H.S. AT 18" O.C.
12. STEEL BRACE.
13. 3– #6 A706 WELDABLE REBAR x

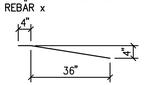

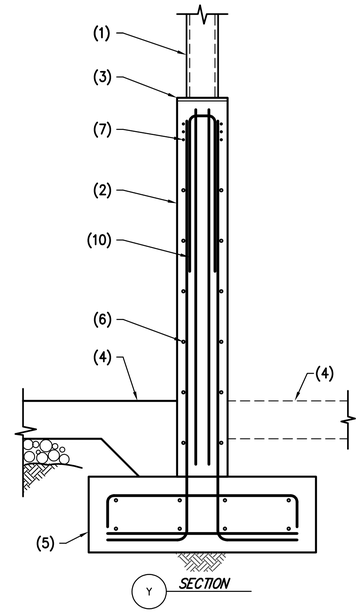

304 *ELEVATION – STEEL COLUMN AT CONCRETE WALL*

NO SCALE

PK ASSOCIATES, LLC
6900 E. Belleview Ave. Suite 200
Greenwood Village, CO 80111
Phone:(720) 799.1058
Email: cadd@pkastructural.com
Website: www.pkastructural.com
Proj Num: 25113

Registered Professional Engineer (Civil) CERTIFICATE NO. 70374 JAMES APPLEYARD Date Signed 6/15/26 ARIZONA, U.S.A.

Issue Date:	10 JULY 2026	
Revisions:	# Description	Date

gabor lorant architects
3326 n. 3rd avenue suite 200
phoenix, arizona 85013
tel: 602.667.9090
fax: 602.667.9133
gaborlorant.com
gla Project No.: 24102

ARIZONA DEPARTMENT OF TRANSPORTATION
PROJECT DELIVERY AND OPERATIONS DIVISION
PROJECT MANAGEMENT GROUP

SAN SIMON PORT OF ENTRY
BRACE FRAME DETAILS

ROUTE	MILEPOST	STRUCTURE NO.
I-10	383	

F.H.W.A Arizona Division

STATE	PROJECT NO.	FEDERAL ID NO.	SHEET NO.	TOTAL SHEETS	RECORD DRAWING
ARIZ.	010 CH 383	010-F(238)T	137	200	

LOCATION: SAN SIMON PORT OF ENTRY (POE)

TRACS NO. F0728 01 C

DWG NO. **S401**

____ OF ____

DO NOT SCALE DRAWINGS. DO NOT PLOT "SCALE TO FIT". THIS DOCUMENT IS FORMATTED FOR THE ANSI D (22"x34") SHEET SIZE.
FULL-SIZE PLOT ON ANSI D (22"x34") PAPER ONLY. HALF-SIZE PLOT ON 11"x17" PAPER ONLY.

STAPLE ZONE

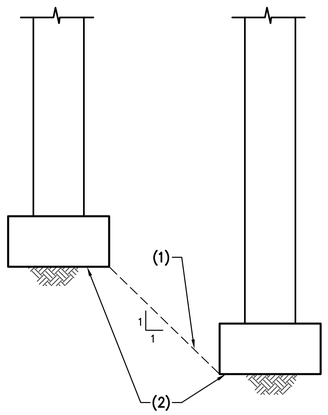

NOTES:
1. MAXIMUM SLOPE BETWEEN BOTTOM OF FOOTINGS SHALL BE 45° STEP. FOOTINGS AS REQUIRED – SEE TYPICAL DETAIL.
2. BOTTOM OF CONCRETE FOOTING.

NOTE:
FOR ADDITIONAL INFORMATION, SEE PLANS AND DETAILS.

06 *MAXIMUM SLOPE BETWEEN ADJACENT FOOTING*
NO SCALE

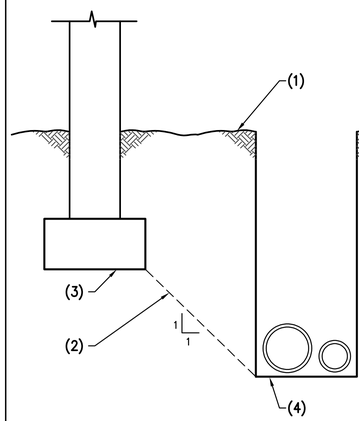

NOTES:
1. FINISHED GRADE WHERE OCCURS.
2. DO NOT EXCAVATE A TRENCH CLOSER THAN A 45 DEGREE ANGLE BELOW BOTTOM OF FOOTING OR FOUNDATION.
3. BOTTOM OF CONCRETE FOOTING.
4. BOTTOM OF TRENCH.

NOTE:
FOR ADDITIONAL INFORMATION, SEE PLANS AND DETAILS.

07 *TRENCH PARALLEL TO FOUNDATION*
NO SCALE

VERT. AND HORIZ. ANCHOR EMBEDMENT LENGTH FOR ANCHORS IN CONCRETE						
ANCHOR DIAMETER	ANCHOR AND ANCHOR RODS		EXPANSION ANCHORS	THREADED ROD ADHESIVE ANCHORS	REBAR ADHESIVE ANCHORS	SCREW ANCHORS
	VERT.	HORIZ.				
1/2" (#4)	6"	4"	5"	4"	4"	4"
5/8" (#5)	6 1/2"	4 1/2"	6 1/8"	5"	5"	4 3/8"
3/4" (#6)	7"	5"	7 1/2"	6"	6"	6 1/4"
7/8" (#7)	8"	6"	---	7"	7"	---
1" (#8)	9"	7"	9 3/4"	8"	8"	---
1 1/4"	11"	9"	---	---	---	---
1 1/2"	12"	10"	---	---	---	---

VERT. AND HORIZ. ANCHOR EMBEDMENT LENGTH FOR ANCHORS IN MASONRY										
ANCHOR DIAMETER	ANCHOR AND ANCHOR RODS		EXPANSION ANCHORS		THREADED ROD ADHESIVE ANCHORS		REBAR ADHESIVE ANCHORS		SCREW ANCHORS	
	VERT.	HORIZ.	VERT.	HORIZ.	VERT.	HORIZ.	VERT.	HORIZ.	VERT.	HORIZ.
1/2" (#4)	6"	4"	3"	3 1/2"	4 1/2"	4 1/2"	4 1/2"	4 1/2"	4 1/2"	4"
5/8" (#5)	6 1/2"	4 1/2"	3 1/2"	4 3/8"	5 5/8"	5 5/8"	5 5/8"	5 5/8"	4 1/2"	5"
3/4" (#6)	7"	5"	---	5 1/4"	---	6 3/4"	---	6 3/4"	---	5 1/2"

NOTES:

FOR APPROVED MANUFACTURERS OF EXPANSION BOLTS, ADHESIVE ANCHORS AND SCREW ANCHORS IN CONCRETE AND MASONRY, SEE GENERAL STRUCTURAL NOTES.

PROVIDE ANCHORS, ANCHOR RODS, EXPANSION BOLTS, ADHESIVE ANCHORS AND SCREW ANCHORS PER THIS SCHEDULE UNLESS NOTED OTHERWISE ON PLANS OR DETAILS.

ANCHORS, ANCHOR RODS, EXPANSION BOLTS, ADHESIVE ANCHORS AND SCREW ANCHORS USED IN MASONRY SHALL BE INSTALLED IN GROUTED CELLS. IF GROUTED CELLS ARE NOT ENCOUNTERED, BREAK INTO CELL AND GROUT SOLID FOR 8" MINIMUM ABOVE AND BELOW BOLT LOCATION.

ANCHOR RODS, EXPANSION BOLTS, THREADED ANCHORS, AND SCREW ANCHORS SHALL BE INSTALLED WITH STEEL WASHERS.

THREADED ROD AND ADHESIVE SHALL BE SUPPLIED BY SAME APPROVED MANUFACTURER.

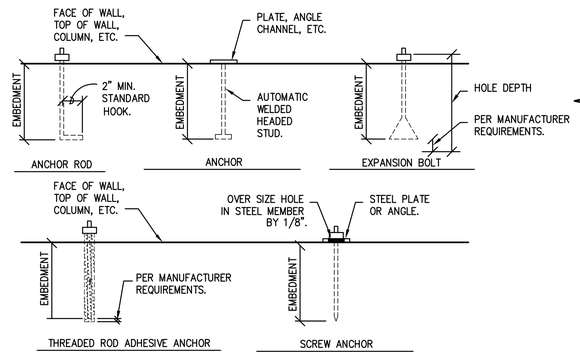

05 *TYPICAL ANCHOR, ANCHOR ROD, EXPANSION BOLT, ADHESIVE ANCHOR AND SCREW ANCHOR SCHEDULE*
NO SCALE

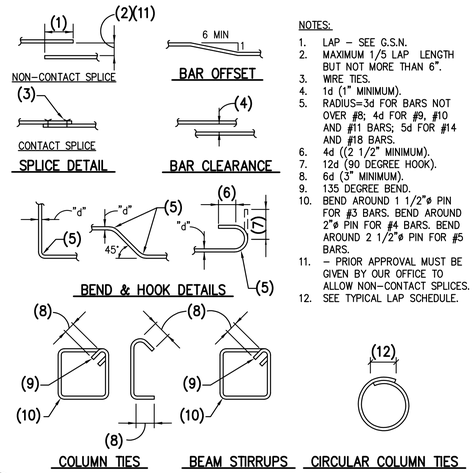

NOTES:
1. LAP – SEE G.S.N.
2. MAXIMUM 1/5 LAP LENGTH BUT NOT MORE THAN 6".
3. WIRE TIES.
4. 1d (1" MINIMUM).
5. RADIUS=3d FOR BARS NOT OVER #8; 4d FOR #9, #10 AND #11 BARS; 5d FOR #14 AND #18 BARS.
6. 4d (2 1/2" MINIMUM).
7. 12d (90 DEGREE HOOK).
8. 6d (3" MINIMUM).
9. 135 DEGREE BEND.
10. BEND AROUND 1 1/2"ø PIN FOR #3 BARS. BEND AROUND 2"ø PIN FOR #4 BARS. BEND AROUND 2 1/2"ø PIN FOR #5 BARS.
11. – PRIOR APPROVAL MUST BE GIVEN BY OUR OFFICE TO ALLOW NON-CONTACT SPLICES.
12. SEE TYPICAL LAP SCHEDULE.

03 *TYPICAL CONCRETE REINFORCING BAR DETAILS*
NO SCALE

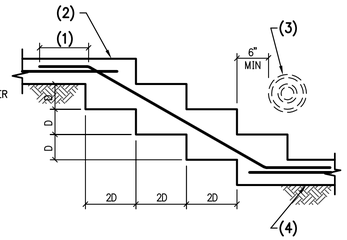

NOTES:
1. LAP PER G.S.N. (24" MIN.) –TYP.
2. TOP OF WALL FOOTING.
3. PIPE THRU STEM WALL AS OCCURS – SEE TYP. DET.
4. RETURN TO FOOTING THICKNESS AS SHOWN ON PLAN.

NOTE:
D = 2'–0" MAXIMUM.

04 *TYPICAL STEP IN CONCRETE FOOTING*
NO SCALE

CONC. PSI	CLASS B TENSION SPLICE LENGTHS						COMP. BARS	
	f'c = 2,500 PSI/ f'c = 3,000 PSI		f'c = 4,000 PSI		f'c = 5,000 PSI AND HIGHER		f'c = ALL	
BAR LOCATION	REGULAR CLASS	TOP CLASS	REGULAR CLASS	TOP CLASS	REGULAR CLASS	TOP CLASS	STD LAP	ENCLOSED W/ SPIRAL TIES
SIZE								
#3	24"	31"	19"	24"	17"	22"	12"	12"
#4	32"	41"	25"	33"	23"	29"	15"	12"
#5	39"	51"	31"	41"	28"	36"	19"	14"
#6	47"	61"	37"	49"	34"	43"	23"	17"
#7	69"	89"	54"	71"	49"	63"	26"	20"
#8	78"	102"	62"	81"	56"	72"	30"	23"
#9	88"	115"	70"	91"	63"	81"	34"	25"
#10	100"	129"	79"	102"	70"	92"	38"	29"
#11	110"	143"	87"	113"	78"	102"	42"	32"

NOTES:
1. TOP BARS ARE ANY HORIZONTAL BARS PLACED SO THAT MORE THAN 12" OF FRESH CONCRETE IS CAST IN THE MEMBER BELOW THE REINFORCEMENT.
2. UNLESS NOTED OTHERWISE, LAP SPLICES IN CONCRETE BEAMS, SLABS AND WALLS SHALL BE CLASS "B" TENSION SPLICES. CONCRETE COLUMNS SHALL USE COMPRESSION LAP SPLICES.
3. CONTACT STRUCTURAL ENGINEER IF CENTER-TO CENTER SPACING OF REINFORCING IS LESS THAN OR EQUAL TO 3 BAR DIAMETERS <3db OR 2db CLEAR SPACING BETWEEN BARS.
4. WHERE CLEAR COVER <db, MULTIPLY TENSION LAP SPLICE BY 1.5.
5. ALL SPLICES MUST BE FULL CONTACT.

01 *LAP SCHEDULE FOR REINFORCING STEEL*
NO SCALE

BAR SIZE	HOOKED EMBEDMENT			EXTENSION		STRAIGHT BAR EMBEDMENT		
	3000 PSI CONCRETE	4000 PSI CONCRETE	5000 PSI CONCRETE	90° HOOK	180° HOOK	5000 PSI	4000 PSI	3000 PSI
#3	6	6	6	4.5	2.5	13	14	16
#4	8	7	6	6.0	2.5	17	19	22
#5	10	8	7	7.5	2.5	21	24	27
#6	12	10	9	9.0	3.0	26	28	33
#7	13	12	10	10.5	3.5	37	42	48
#8	15	13	12	12.0	4.0	43	47	55
#9	17	15	13	13.5	4.5	48	54	62
#10	19	17	15	15.2	5.1	54	60	70
#11	22	19	17	16.9	5.6	60	67	77

NOTES:
1. EMBEDMENT LENGTH IS BASED ON 2 1/2" MINIMUM SIDE COVER AND 2" MINIMUM END COVER.
2. CONTACT STRUCTURAL ENGINEER IF CENTER TO CENTER SPACING OF REINFORCING IS LESS THAN OR EQUAL TO 3 BAR DIAMETERS <3db OR 2db CLEAR SPACING BETWEEN BARS.
3. WHERE CLEAR COVER <db, MULTIPLY EMBEDMENT AND STRAIGHT BAR DEVELOPMENT BY 1.5.

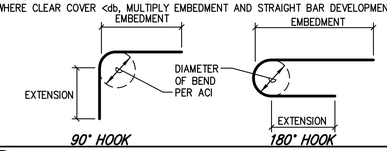

02 *DOWEL DEVELOPMENT LENGTH IN TENSION (INCHES)*
NO SCALE

PK ASSOCIATES, LLC
6900 E. Belleview Ave. Suite 200
Greenwood Village, CO 80111
Phone: (720) 799.1058
Email: cadd@pkastructural.com
Website: www.pkastructural.com
Proj Num: 25113

Registered Professional Engineer (Civil) CERTIFICATE NO. 70374 JAMES APPLEYARD Date Signed 6/19/26 ARIZONA, U.S.A.

Issue Date:	10 JULY 2026	
Revisions:	Δ Description	Date

gabor lorant architects
3326 n. 3rd avenue suite 200
phoenix, arizona 85013
tel: 602.667.9090
fax: 602.667.9133
gaborlorant.com

gla Project No.: 24102

ARIZONA DEPARTMENT OF TRANSPORTATION
PROJECT DELIVERY AND OPERATIONS DIVISION
PROJECT MANAGEMENT GROUP

SAN SIMON PORT OF ENTRY
TYPICAL DETAILS

ROUTE	STATE	PROJECT NO.	FEDERAL ID NO.	SHEET NO.	TOTAL SHEETS	RECORD DRAWING
I-10	ARIZ.	010 CH 383	010-F(238)T	138	200	
MILEPOST 383	LOCATION: SAN SIMON PORT OF ENTRY (POE)					DWG NO. S500
STRUCTURE NO.	TRACS NO. F0728 01 C					___ OF ___

F.H.W.A Arizona Division

DO NOT SCALE DRAWINGS. DO NOT PLOT "SCALE TO FIT". THIS DOCUMENT IS FORMATTED FOR THE ANSI D (22"x34") SHEET SIZE.
FULL-SIZE PLOT ON ANSI D (22"x34") PAPER ONLY. HALF-SIZE PLOT ON 11"x17" PAPER ONLY.

STAPLE ZONE

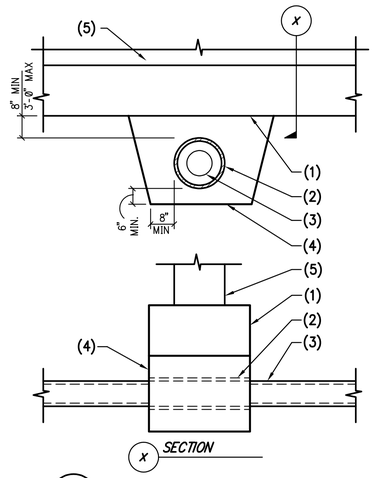

NOTES:
1. CONCRETE FOOTING.
2. SLEEVE – PROVIDE 1/2" MINIMUM CLEARANCE AROUND PIPE OR CONDUIT.
3. PIPE OR CONDUIT.
4. CONCRETE FILL TO BE PLACED BEFORE FOOTING IS POURED – FORM SAME AS FOOTING AND POUR FULL WIDTH OF PIPE TRENCH.
5. STEM WALL.

NOTE:
–NO PIPE SHALL PASS THRU FOOTINGS OR UNDER COLUMN FOOTINGS.
–FOR TRENCHES GREATER THAN 3'–6" BELOW BOTTOM OF FOOTING, SEE PIPE PASSING BELOW WALL FOOTING DETAIL.

12 *PIPE PASSING UNDER WALL FOOTING IN SHALLOW TRENCH*
NO SCALE

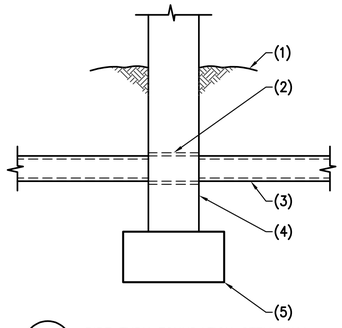

NOTES:
1. FINISHED GRADE WHERE OCCURS.
2. SLEEVE – PROVIDE 1/2" MINIMUM CLEARANCE AROUND PIPE/CONDUIT.
3. PIPE OR CONDUIT.
4. STEM WALL.
5. CONCRETE FOOTING.

NOTE:
–NO PIPE SHALL PASS THRU FOOTINGS OR UNDER COLUMN FOOTINGS.
–FOR ADDITIONAL INFORMATION, SEE PLANS AND DETAILS.

10 *PIPE THRU FOUNDATION STEM WALL*
NO SCALE

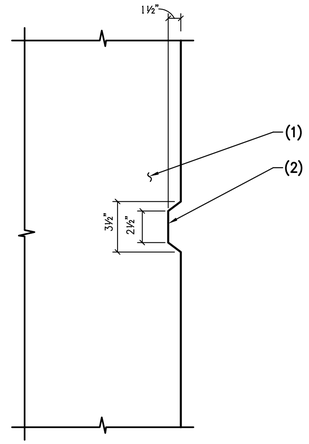

NOTES:
1. CONCRETE.
2. KEYED JOINT – REMOVE FORM MATERIAL PRIOR TO PLACING ADJACENT CONCRETE.

NOTE:
ALL DIMENSIONS ARE ±1/2".

08 *TYPICAL KEY IN CONCRETE*
NO SCALE

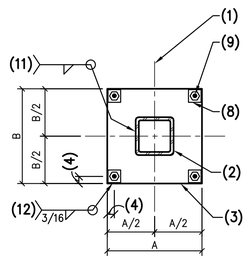

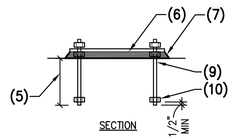

NOTES:
1. CENTERLINE OF COLUMN AND STEEL BASE PLATE.
2. STEEL COLUMN.
3. STEEL BASE PLATE.
4. EDGE DISTANCE PER TABLE.
5. EMBEDMENT PER SCHEDULE.
6. DOUBLE NUTS.
7. 1 1/2" DRYPACK.
8. STEEL PLATE WASHERS – REQUIRED AT OVERSIZED HOLES. FOR SIZE, SEE TABLE.
9. ANCHOR ROD PER G.S.N.
10. HEAVY HEX NUT – TACK WELD.
11. 3/16" FILLET WELD AT WALL THICKNESS 1/4" OR LESS, 1/4" FILLET WELD AT WALL THICKNESS 5/16" AND 3/8", AND 5/16" FILLET WELD AT WALL THICKNESS GREATER THAN 3/8".
12. WELD TOP STEEL PLATE WASHERS ALL AROUND TO STEEL BASE PLATE

STEEL COLUMN BASE PLATES (GRADE 36 ANCHOR RODS)				
F1554, GRADE 36 ANCHOR ROD DIA	STEEL PLATE WASHER (A36)	HOLE SIZE AT STEEL PLATE WASHER	OVERSIZED HOLE DIA AT STEEL BASE PLATE	EDGE DISTANCE OF BASE PLATE TO CENTERLINE OF HOLE
3/4"	3/8"x2 1/2"x2 1/2"	13/16"	1 5/16"	1 1/2"

NOTE:
–FOR ADDITIONAL INFORMATION, SEE COLUMN SCHEDULE.
–CONTRACTOR SHALL COORDINATE ANCHOR ROD EXTENSIONS AND THREADED LENGTHS.

13 *PLAN VIEW – STEEL COLUMN AT STEEL BASE PLATE*
NO SCALE

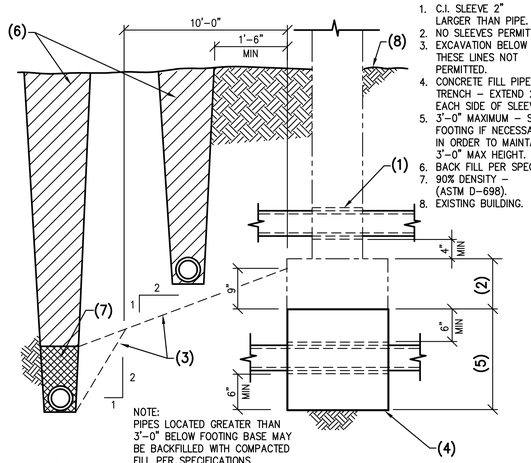

NOTES:
1. C.I. SLEEVE 2" LARGER THAN PIPE.
2. NO SLEEVES PERMITTED.
3. EXCAVATION BELOW THESE LINES NOT PERMITTED.
4. CONCRETE FILL PIPE TRENCH – EXTEND 2'–0" EACH SIDE OF SLEEVE.
5. 3'–0" MAXIMUM – STEP FOOTING IF NECESSARY IN ORDER TO MAINTAIN 3'–0" MAX HEIGHT.
6. BACK FILL PER SPECS.
7. 90% DENSITY – (ASTM D–698).
8. EXISTING BUILDING.

NOTE:
PIPES LOCATED GREATER THAN 3'–0" BELOW FOOTING BASE MAY BE BACKFILLED WITH COMPACTED FILL PER SPECIFICATIONS

11 *TYPICAL PIPE THROUGH FOOTING AND TRENCH*
NO SCALE

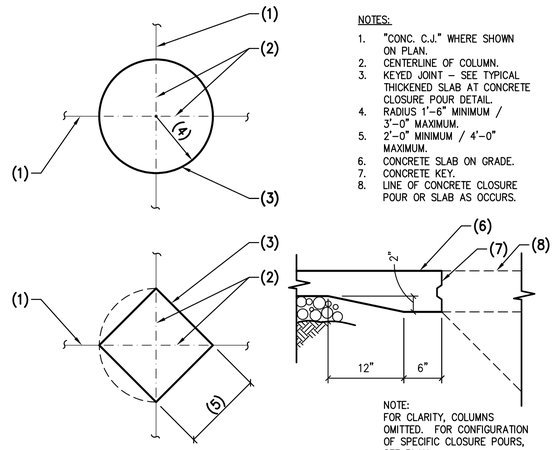

NOTES:
1. "CONC. C.J." WHERE SHOWN ON PLAN.
2. CENTERLINE OF COLUMN.
3. KEYED JOINT – SEE TYPICAL THICKENED SLAB AT CONCRETE CLOSURE POUR DETAIL.
4. RADIUS 1'–6" MINIMUM / 3'–0" MAXIMUM.
5. 2'–0" MINIMUM / 4'–0" MAXIMUM.
6. CONCRETE SLAB ON GRADE.
7. CONCRETE KEY.
8. LINE OF CONCRETE CLOSURE POUR OR SLAB AS OCCURS.

NOTE:
FOR CLARITY, COLUMNS OMITTED. FOR CONFIGURATION OF SPECIFIC CLOSURE POURS, SEE PLAN. .

09 *TYPICAL COLUMN CLOSURE POUR AT CONCRETE SLAB ON GRADE*
NO SCALE

PK ASSOCIATES, LLC
6900 E. Belleview Ave. Suite 200
Greenwood Village, CO 80111
Phone: (720) 799.1058
Email: cadd@pkastructural.com
Website: www.pkastructural.com
Proj Num: 25113

Registered Professional Engineer (Civil) CERTIFICATE NO. 70374 JAMES APPLEYARD Date Signed 1/9/26 ARIZONA, U.S.A.

Issue Date:	10 JULY 2026		
Revisions:	#	Description	Date

gabor lorant architects
3326 n. 3rd avenue suite 200
phoenix, arizona 85013
tel: 602.667.9090
fax: 602.667.9133
gaborlorant.com

gla Project No.: 24102

ARIZONA DEPARTMENT OF TRANSPORTATION
PROJECT DELIVERY AND OPERATIONS DIVISION
PROJECT MANAGEMENT GROUP

SAN SIMON PORT OF ENTRY
TYPICAL DETAILS

ROUTE	MILEPOST	STRUCTURE NO.
I-10	383	

F.H.W.A Arizona Division

STATE	PROJECT NO.	FEDERAL ID NO.	SHEET NO.	TOTAL SHEETS	RECORD DRAWING
ARIZ.	010 CH 383	010-F(238)T	139	200	

LOCATION: SAN SIMON PORT OF ENTRY (POE)

TRACS NO. F0728 01 C

DWG NO. **S501**

___ OF ___

DO NOT SCALE DRAWINGS. DO NOT PLOT "SCALE TO FIT". THIS DOCUMENT IS FORMATTED FOR THE ANSI D (22"x34") SHEET SIZE.
FULL-SIZE PLOT ON ANSI D (22"x34") PAPER ONLY. HALF-SIZE PLOT ON 11"x17" PAPER ONLY.

STAPLE ZONE

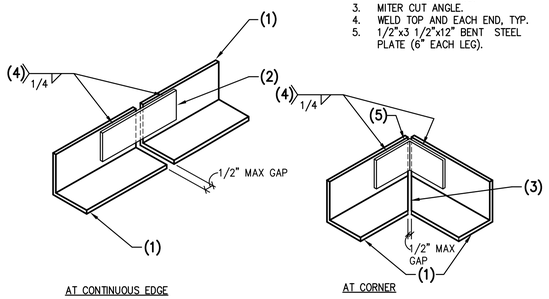

AT CONTINUOUS EDGE

AT CORNER

NOTES:
1. STEEL LEDGER ANGLE – FOR SIZE AND LOCATION, SEE PLAN.
2. STEEL PLATE 1/2"x2 3/4"x12" LONG TYPICAL U.N.O.
3. MITER CUT ANGLE.
4. WELD TOP AND EACH END, TYP.
5. 1/2"x3 1/2"x12" BENT STEEL PLATE (6" EACH LEG).

20 *TYPICAL SPLICE IN CONTINUOUS STEEL LEDGER ANGLE*
NO SCALE

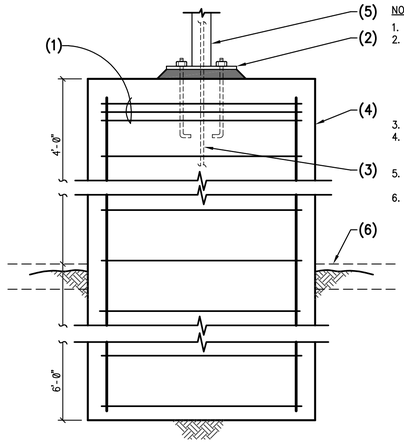

NOTES:
1. 3 TIES IN TOP 5".
2. ANCHOR BOLT AND PLATE PER ADOT STANDARD DRAWINGS AND LIGHT SUPPLIER REQUIREMENTS. FIELD VERIFY ANCHOR BOLT SPACING ARRANGEMENTS AT RELOCATED LIGHT POLES.
3. ELECTRICAL CONDUIT REQ'D.
4. 36"ø CONCRETE PIER W/ 12 #6 VERTICALS AND #3 TIES AT 12" O.C.
5. LIGHT POLE MAX. HEIGHT = 40'–0".
6. FINISHED GRADE OR CONCRETE SLAB WHERE OCCURS.

18 *TYPICAL LIGHT POLE STANDARD*
NO SCALE

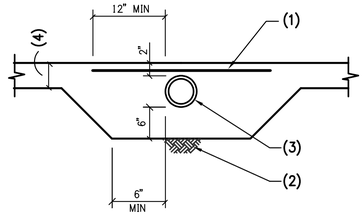

NOTES:
1. 4 X 4 – W1.4 X W1.4 W.W.F. OR #4 AT 12" O.C.
2. FIRM UNDISTURBED SOIL OR COMPACTED BASE.
3. PIPE OR CONDUIT.
4. TYPICAL SLAB THICKNESS.

16 *SLEEVE FOR PIPE AT SLAB*
NO SCALE

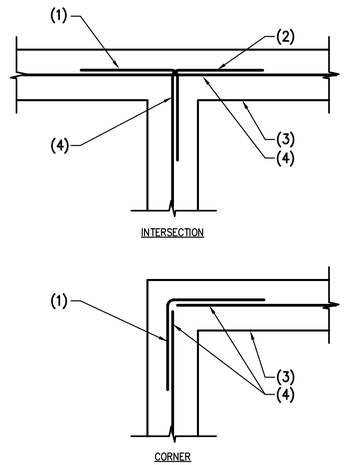

INTERSECTION

CORNER

NOTES:
1. CORNER BARS SAME SIZE AND SPACING AS HORIZ. REINF. LAP PER G.S.N. (24" MINIMUM).
2. ALTERNATE BEND.
3. CONCRETE STEM WALL OR FOOTING.
4. REINF. PER PLANS AND/OR G.S.N.

14 *PLAN VIEW – CORNER REINFORCING IN CONCRETE FOOTING AND/OR STEM WALL*
NO SCALE

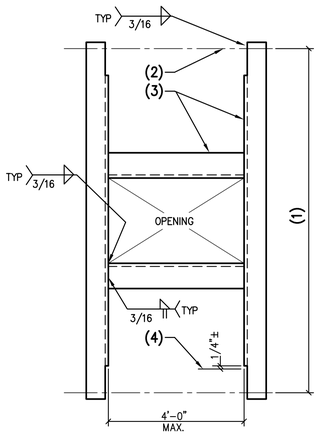

NOTES:
1. SEE PLAN FOR SPACING (8'–0" MAXIMUM).
2. CENTERLINE OF FRAMING MEMBER.
3. ANGLE 4" x 4" x 1/4".
4. FACE OF FRAMING MEMBER.

NOTE:
FOR CLARITY, ROOF DECK OMITTED.
MAXIMUM EQUIPMENT WEIGHT FOR THIS DETAIL NOT TO EXCEED 500 LBS. FOR HEAVIER LOADS USE DETAIL 32.

21 *PLAN – TYPICAL OPENING IN ROOF FRAMING OR LIGHT EQUIPMENT SUPPORT FRAME*
NO SCALE

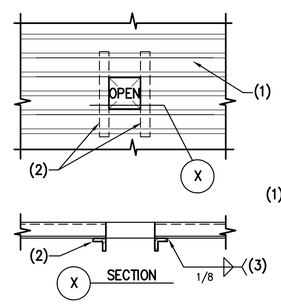

NOTES:
1. STEEL DECK.
2. ANGLE SUPPORT 2" X 2" X 3/16" BELOW DECK – ANGLE MAY BE PLACE ON TOP OF DECK WITH PRIOR APPROVAL OF ARCHITECT.
3. WELD 2" AT EACH RIB – TYPICAL.

NOTE:
AN OPENING WHICH CUTS ONE WEB (4" MAX DIMENSION PERPENDICULAR TO RIBS), MAY BE CUT IN DECK WITHOUT ANY SPECIAL REINFORCING.

AN OPENING WHICH CUTS TWO WEBS (8" MAX DIMENSION PERPENDICULAR TO RIBS), WILL REQUIRE ANGLE SUPPORT SHOWN ABOVE.

ANY OPENING WHICH CUTS MORE THAN TWO WEBS, FRAME OPENING WITH TYPICAL ANGLE SUPPORT FRAME, SEE TYPICAL OPENING IN STEEL DECK DETAIL.

19 *TYPICAL SMALL OPENING IN STEEL DECK*
NO SCALE

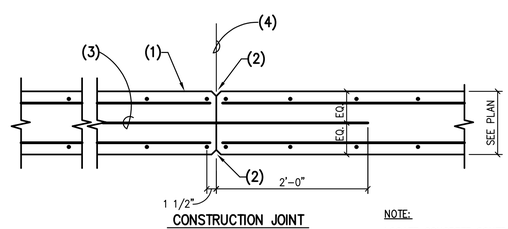

CONSTRUCTION JOINT
(60'–0" O.C. MAX.)

NOTES:
1. CONCRETE WALL.
2. 1/2" x 1/2" CHAMFER.
3. 3/4"ø x4'–0" LONG SMOOTH DOWELS TO MATCH HORIZONTAL REINFORCING SPACING.
4. FOR LOCATION OF CRITICAL CONCRETE C.J. SEE PLAN.

NOTE:
LOCATE CONCRETE CONTROL JOINTS AT 30'–0" O.C. MAX. LOCATE CONSTRUCTION JOINTS AT 60'–0" O.C. MAX.

17 *TYPICAL CONCRETE WALL CONTROL, CONSTRUCTION, AND SLIP JOINT*
NO SCALE

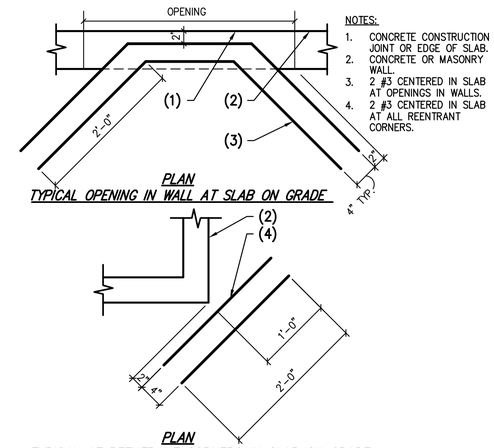

NOTES:
1. CONCRETE CONSTRUCTION JOINT OR EDGE OF SLAB.
2. CONCRETE OR MASONRY WALL.
3. 2 #3 CENTERED IN SLAB AT OPENINGS IN WALLS.
4. 2 #3 CENTERED IN SLAB AT ALL REENTRANT CORNERS.

15 *TYPICAL REENTRANT CORNER REINFORCING IN SLAB ON GRADE*
NO SCALE

PK ASSOCIATES, LLC
6900 E. Belleview Ave. Suite 200
Greenwood Village, CO 80111
Phone: (720) 799.1058
Email: cadd@pkastructural.com
Website: www.pkastructural.com
Proj Num: 25113

Registered Professional Engineer (Civil) CERTIFICATE NO. 70374 JAMES APPLEYARD Date Signed 1/9/26 ARIZONA, U.S.A.

Issue Date:	10 JULY 2026		
Revisions:	#	Description	Date

gabor lorant architects
3326 n. 3rd avenue suite 200
phoenix, arizona 85013
tel: 602.667.9090
fax: 602.667.9133
gaborlorant.com

gla Project No.: 24102

gla

ARIZONA DEPARTMENT OF TRANSPORTATION
PROJECT DELIVERY AND OPERATIONS DIVISION
PROJECT MANAGEMENT GROUP

SAN SIMON PORT OF ENTRY
TYPICAL DETAILS

ROUTE	MILEPOST	STRUCTURE NO.
I-10	383	

	STATE	PROJECT NO.	FEDERAL ID NO.	SHEET NO.	TOTAL SHEETS	RECORD DRAWING
F.H.W.A Arizona Division	ARIZ.	010 CH 383	010-F(238)T	140	200	

LOCATION: SAN SIMON PORT OF ENTRY (POE)

TRACS NO. F0728 01 C

DWG NO. **S502**

___ OF ___

DO NOT SCALE DRAWINGS. DO NOT PLOT "SCALE TO FIT". THIS DOCUMENT IS FORMATTED FOR THE ANSI D (22"x34") SHEET SIZE.
FULL-SIZE PLOT ON ANSI D (22"x34") PAPER ONLY. HALF-SIZE PLOT ON 11"x17" PAPER ONLY.

STAPLE ZONE

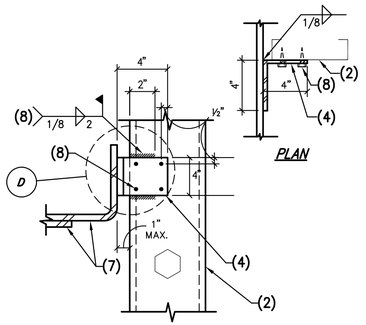

B TYPICAL CLIP ANGLE CONNECTION

NOTES:
1. CONT. 16 GAGE "UNPUNCHED" STEEL TRACK. FOR ATTACHMENT SEE DETAIL 29.
2. STEEL STUD WALL.
3. USE 1/2"ø PUDDLE WELD AT 16" O.C.
4. STEEL CLIP ANGLE 4"x4"x14 GA. x 4" LONG AT EACH STUD.
5. STRUCTURAL STEEL MEMBER.
6. STEEL STUD 2 1/2" X 18 GA. AT 32" O.C., REQUIRED ONLY WHERE WINDOW OPENINGS WIDER THAN 6'-0" OCCUR. NOT REQUIRED FOR WINDOWS 6'-0" WIDE OR LESS, OR WHERE STUDS ARE FULL HEIGHT.
7. STEEL MEMBER (BENT PLATE AND BEAM FLANGE SHOWN HERE BUT OTHER STEEL SHAPES APPLY ALSO).
8. ALTERNATE TO WELD AT STUD TO CLIP ANGLE CONNECTION – 4 – #10 x 3/4" LONG SELF-TAPPING TEK SCREWS.
9. DEFLECTION TRACK TO ALLOW VERT. MOVEMENT – USE (2) 16 GA. TRACKS. BOTTOM TRACKS TO HAVE 2" LEGS. (ALLOW 3/4" DEFLECTION).
10. #10 x 3/4" LONG SELF-TAPPING SCREW EACH SIDE.
11. #10 SCREW AT EVERY OTHER FLUTE (12" O.C.) AS ALTERNATE TO WELD (CONTRACTOR'S OPTION).
12. USE 1" VERTICALLY SLOTTED HOLES WHERE STUDS ARE FULL FLOOR HEIGHT.

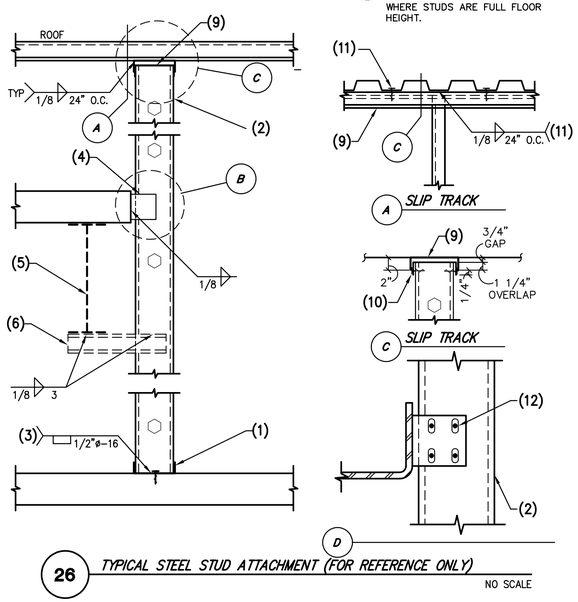

26 TYPICAL STEEL STUD ATTACHMENT (FOR REFERENCE ONLY)
NO SCALE

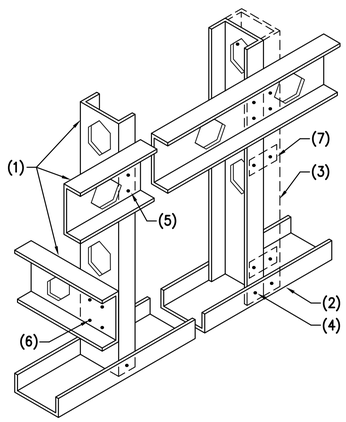

NOTES:
1. STEEL STUD.
2. UNPUNCHED STEEL STUD TRACK – ATTACHMENT REQUIRED HILTI 0.145ø x 3/4" LONG X-DNI TYPE POWDER DRIVEN PINS @ 8" O.C. (I.C.C. #ERS-1663) OR APPROVED EQUAL TYP. U.N.O.
3. MULTIPLE STUDS WHERE SHOWN ON PLAN OR DETAILS.
4. #10 X 3/4" LONG TEKS SCREWS EACH SIDE.
5. 2 #10 X 3/4" LONG TEKS SCREWS.
6. 4 #10 X 3/4" LONG TEKS SCREWS.
7. 2"x20 GAGE FLAT STRAP BOTH SIDES AT 24" O.C. W/ 1 #10 SCREW AT EACH VERTICAL STUD.

25 TYP. STEEL STUD WALL – SCREW CONNECTION (FOR REFERENCE ONLY)
NO SCALE

NOMINAL BEAM DEPTH "D"	NUMBER OF 1" DIA. ASTM, A325N BOLTS
UP TO 7"	2
8" – 11"	2
12" – 14"	3
15" – 17"	4
18" – 20"	5
21" – 23"	6
24" – 29"	7
30" – 32"	8
33" – 35"	9
36"	10

FRAMING NOTES:
1. THE TYPICAL STEEL BEAM TO STEEL COLUMN OR STEEL BEAM TO STEEL BEAM CONNECTION CONSISTS OF 3/8" SINGLE SHEAR PLATES WITH 1" DIA. ASTM A325N BOLTS. USE 5/8" SHEAR PLATES WHERE "D" = 27" OR GREATER.
2. ALL BOLTS SHALL BE INSTALLED USING SHORT SLOTTED HOLES IN EITHER THE BEAM WEB OR THE SHEAR PLATE PER LATEST AISC SPECIFICATIONS.

24 BOLT SCHEDULE FOR TYPICAL STEEL CONNECTIONS
NO SCALE

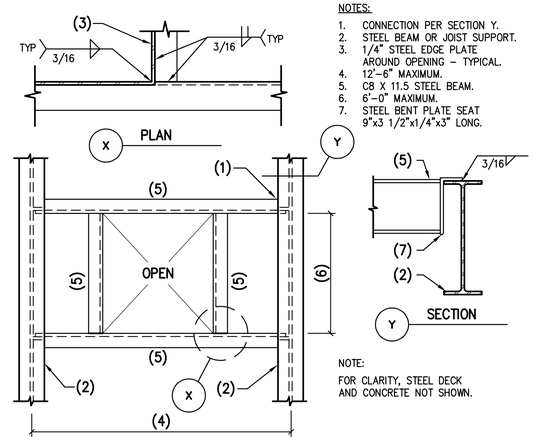

NOTES:
1. CONNECTION PER SECTION Y.
2. STEEL BEAM OR JOIST SUPPORT.
3. 1/4" STEEL EDGE PLATE AROUND OPENING – TYPICAL.
4. 12'-6" MAXIMUM.
5. C8 X 11.5 STEEL BEAM.
6. 6'-0" MAXIMUM.
7. STEEL BENT PLATE SEAT 9"x3 1/2"x1/4"x3" LONG.

NOTE:
FOR CLARITY, STEEL DECK AND CONCRETE NOT SHOWN.

22 PLAN VIEW – TYPICAL FRAME OPENING AT LARGE OPENING OR MECHANICAL UNIT SUPPORT FRAME
NO SCALE

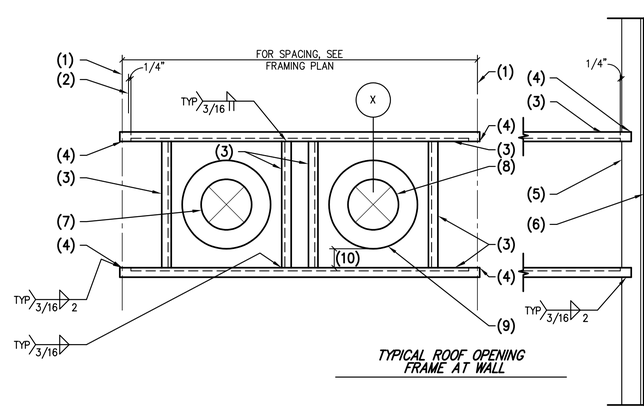

NOTES:
1. CENTERLINE OF FRAMING MEMBER.
2. EDGE OF FRAMING MEMBER.
3. L4x3x1/4 (LLV).
4. COPE VERTICAL LEG OF ANGLE.
5. LEDGER.
6. WALL.
7. OPENING IN ROOF DECK FOR ROOF DRAIN.
8. OPENING IN ROOF DECK FOR OVER FLOW ROOF DRAIN WHERE APPLICABLE.
9. DRAIN BODY AND UNDERDECK CLAMP.
10. 3" MAXIMUM ALL SIDES.
11. HSS 1 1/2x1 1/2x1/8x LENGTH OF OPENING.
12. PUDDLE WELD OR FASTENER PER GSN.

TYPICAL ROOF OPENING FRAME AT WALL

ALTERNATE SECTION

23 TYPICAL ROOF DRAIN OPENING FRAME
NO SCALE

PK ASSOCIATES, LLC
6900 E. Belleview Ave. Suite 200
Greenwood Village, CO 80111
Phone:(720) 799.1058
Email: cadd@pkastructural.com
Website: www.pkastructural.com
Proj Num: 25113

Registered Professional Engineer (Civil) CERTIFICATE NO. 70374 JAMES APPLEYARD Date Signed 6/30/26 ARIZONA, U.S.A.

Issue Date:	10 JULY 2026	
Revisions:	# Description	Date

gabor lorant architects
3326 n. 3rd avenue suite 200
phoenix, arizona 85013
tel: 602.667.9090
fax: 602.667.9133
gaborlorant.com

gla Project No.: 24102

ARIZONA DEPARTMENT OF TRANSPORTATION
PROJECT DELIVERY AND OPERATIONS DIVISION
PROJECT MANAGEMENT GROUP

SAN SIMON PORT OF ENTRY
TYPICAL DETAILS

ROUTE	MILEPOST	STRUCTURE NO.
I-10	383	

F.H.W.A Arizona Division	STATE	PROJECT NO.	FEDERAL ID NO.	SHEET NO.	TOTAL SHEETS	RECORD DRAWING
	ARIZ.	010 CH 383	010-F(238)T	141	200	

LOCATION: SAN SIMON PORT OF ENTRY (POE)

TRACS NO. F0728 01 C

DWG NO. S503

___ OF ___

DO NOT SCALE DRAWINGS. DO NOT PLOT "SCALE TO FIT". THIS DOCUMENT IS FORMATTED FOR THE ANSI D (22"x34") SHEET SIZE.
FULL-SIZE PLOT ON ANSI D (22"x34") PAPER ONLY. HALF-SIZE PLOT ON 11"x17" PAPER ONLY.

STAPLE ZONE

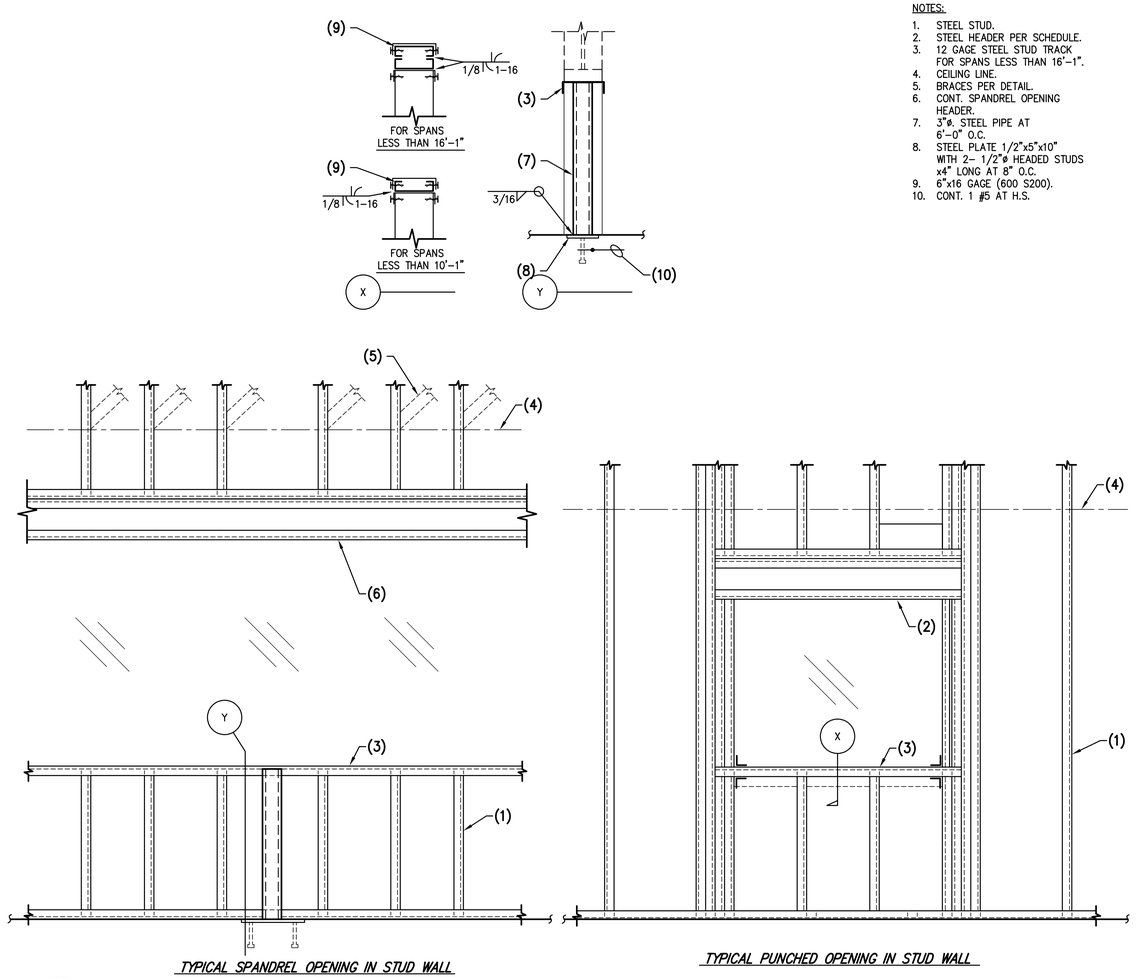

TYPICAL SPANDREL OPENING IN STUD WALL

TYPICAL PUNCHED OPENING IN STUD WALL

28 *TYPICAL OPENINGS IN STEEL STUD WALL*

NO SCALE

NOTES:

1. STEEL STUD.
2. STEEL HEADER PER SCHEDULE.
3. 12 GAGE STEEL STUD TRACK FOR SPANS LESS THAN 16'-1".
4. CEILING LINE.
5. BRACES PER DETAIL.
6. CONT. SPANDREL OPENING HEADER.
7. 3"ø STEEL PIPE AT 6'-0" O.C.
8. STEEL PLATE 1/2"x5"x10" WITH 2- 1/2"ø HEADED STUDS x4" LONG AT 8" O.C.
9. 6"x16 GAGE (600 S200).
10. CONT. 1 #5 AT H.S.

COLD FORMED STRUCTURAL STEEL FRAMING:

ALL COLD-FORMED STEEL FRAMING SHALL BE DESIGNED, FABRICATED AND ERECTED IN ACCORDANCE WITH MANUFACTURER'S RECOMMENDATIONS AND IN ACCORDANCE WITH THE LATEST EDITION OF "SPECIFICATIONS FOR THE DESIGN OF COLD-FORMED STEEL STRUCTURAL MEMBERS" BY THE AMERICAN IRON AND STEEL INSTITUTE.

STEEL FOR 14 AND 16 GAGE STUDS AND JOISTS, AND FOR ALL DIAGONAL TENSION STRAPS SHALL HAVE A MINIMUM YIELD STRENGTH OF 50 KSI. STEEL FOR ALL 18 AND 20 GAGE STUDS AND JOISTS, AND FOR ALL GAGES OF TRACK, ACCESSORIES AND BRIDGING SHALL HAVE A MINIMUM YIELD STRENGTH OF 33 KSI. STEEL SHALL BE GALVANIZED AT LOCATIONS EXPOSED TO WEATHER AND WHEREVER NOTED.

ALL STUD FRAMING (BOTH INTERIOR AND EXTERIOR) SHALL BE DESIGNED AND CONSTRUCTED TO ACCOMMODATE VERTICAL DEFLECTION OF THE STRUCTURE OF UP TO 1/2" LIVE LOAD DEFLECTION, UNLESS GREATER VALUE IS NOTED ON PLANS OR DETAILS. UTILIZE SLIP TRACK OR OTHER SIMILAR MEANS.

ALL STUDS SHALL BE SECURELY SEATED FOR FULL END BEARING ON TOP AND BOTTOM TRACK. UNLESS NOTED OTHERWISE, PROVIDE DOUBLE STUDS AT ALL JAMBS, CORNERS, INTERSECTIONS, BEAM BEARINGS AND JOIST BEARINGS. BRIDGING SHALL BE INSTALLED PER MANUFACTURER'S RECOMMENDATION WITH THE FOLLOWING MINIMUM REQUIREMENTS.

FOR WALLS WITH NO AXIAL LOAD, PROVIDE BRIDGING AT MID-HEIGHT FOR WALLS LESS THAN OR EQUAL TO 10'-0" HIGH, AND 5'-0" O.C. MAXIMUM FOR WALLS GREATER THAN 10'-0" HIGH. FOR AXIAL LOAD BEARING WALLS, PROVIDE BRIDGING EQUALLY SPACED AT 4'-0" MAXIMUM. IN ADDITION, BRIDGING SHALL BE PROVIDED AT ROOF LINES AND ELSEWHERE AS NOTED ON THE DRAWINGS. SOLID BLOCKING SHALL BE INSTALLED IN LIEU OF BRIDGING WHERE NOTED ON THE DRAWINGS.

STEEL STUD DETAILS AND GAGES DEPICATED ON STRUCTURAL DRAWINGS SHOW GENERAL STRUCTURAL REQUIRMENTS AND ARE FOR SCHEMATICS PURPOSE ONLY. THE CONTRACTOR SHALL BE REQUIRED TO SUBMIT SHOP DRAWINGS WITH DESIGN CALCULATIONS SEALED BY A REGISTERED ENGINEER FOR ALL STEEL STUD FRAMING AND ANY ADDITIONAL FRAMING MATERIALS REQUIRED FOR COMPLETE DESIGN SHALL BE INCORPORATED. CALCULATIONS SHALL INCLUDE DERIVATION OF WIND LOADS PER SPECIFIED BUILDING CODE.

ALL WELDING SHALL BE PERFORMED BY WELDERS EXPERIENCED IN LIGHT GAGE STRUCTURAL STEEL FRAMING WORK. DO NOT NOTCH FLANGES OF JOISTS OR STUDS. DOUBLE UP FLOOR JOISTS AND BLOCKING UNDER PARTITIONS. PROVIDE BLOCKING AT SUPPORTS OF ALL JOISTS. DOUBLE UP STUDS AT JAMBS AND AS REQUIRED UNDER BEAMS IN BEARING WALLS.

TYPICAL STUDS SHALL BE DESIGNED FOR L/360 EXCEPT STUDS SUPPORTING VENEER SHALL BE DESIGN FOR MAXIMUM DEFLECTION OF L/600.

STEEL STUD SUPPLIER SHALL DESIGN AND SUPPLY STRUCTURAL STEEL AS REQUIRED FOR COMPLETE CONSTRUCTION OF VERTICAL WALL AWNINGS, SOFFITS, WING PLATES, FASCIA EXTENSIONS, ETC. ANY "RED METAL" OF FABRICATED STRUCTURAL STEEL REQUIRED TO COMPLETE WALL SYSTEMS SHALL BE DESIGNED AND INSTALLED BY STEEL STUD SUPPLIER.

MIN. STEEL STUD PROPERTIES GROSS

SIZE	GAGE	DESIGNATION	Sx(IN^3)	Ix(IN^4)	Fy (KSI)	SPACING	REMARKS	
EXTERIOR							L/360	L/600
8"	12	800S200-97	2.801	11.203	50	16" O.C.	27'-7"	23'-3"
8"	16	800S200-68	2.035	8.140	50	16" O.C.	24'-10"	20'-11"
6"	12	600S200-97	1.871	5.612	50	16" O.C.	21'-11"	18'-6"
6"	16	600S200-54	1.106	3.319	50	16" O.C.	18'-5"	15'-6"
6"	18	600S162-43	0.767	2.316	33	16" O.C.	16'-4"	13'-9"
6"	20	600S162-33	0.577	1.793	33	16" O.C.	13'-9"	12'-8"
INTERIOR								
6"	20-STRUCTURAL	600S162-33	0.598	1.793	33	16" O.C.	24'-0"	22'-0"
6"	20-STRUCTURAL	600S125-33	0.470	1.479	33	16" O.C.	22'-0"	20'-0"
ALL TRACKS SHALL BE SAME GAGE AS STUDS (18 GAGE MIN) W/ 2" FLANGE								

27 *MINIMUM STEEL STUD PROPERTIES*

NO SCALE

PK ASSOCIATES, LLC
6900 E. Belleview Ave. Suite 200
Greenwood Village, CO 80111
Phone: (720) 799.1058
Email: cadd@pkastructural.com
Website: www.pkastructural.com
Proj Num: 25113

Registered Professional Engineer CERTIFICATE NO. (Civil) 70374 JAMES APPLEYARD Date Signed 6/30/26 ARIZONA, U.S.A.

Issue Date:	10 JULY 2026		
Revisions:	#	Description	Date

gla Project No.: 24102

gabor lorant architects
3326 n. 3rd avenue suite 200
phoenix, arizona 85013
tel: 602.667.9090
fax: 602.667.9133
gaborlorant.com

gla

ARIZONA DEPARTMENT OF TRANSPORTATION
PROJECT DELIVERY AND OPERATIONS DIVISION
PROJECT MANAGEMENT GROUP

SAN SIMON PORT OF ENTRY
TYPICAL DETAILS

ROUTE I-10
MILEPOST 383
STRUCTURE NO.

F.H.W.A Arizona Division

STATE	PROJECT NO.	FEDERAL ID NO.	SHEET NO.	TOTAL SHEETS	RECORD DRAWING
ARIZ.	010 CH 383	010-F(238)T	142	200	

LOCATION SAN SIMON PORT OF ENTRY (POE)

TRACS NO. F0728 01 C

DWG NO. **S504**

____ OF ____

DO NOT SCALE DRAWINGS. DO NOT PLOT "SCALE TO FIT". THIS DOCUMENT IS FORMATTED FOR THE ANSI D (22"x34") SHEET SIZE.
FULL-SIZE PLOT ON ANSI D (22"x34") PAPER ONLY. HALF-SIZE PLOT ON 11"x17" PAPER ONLY.

STAPLE ZONE

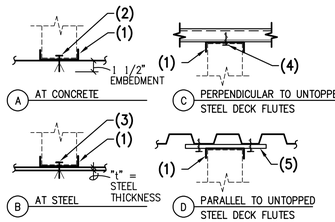

NOTES:

1. STEEL TRACK. DEFLECTION TRACK AS OCCURS.
2. 3/8"ø SIMPSON DROP IN ANCHOR PER SCHEDULE.
3. 0.145ø HILTI X-EDNI POWDER DRIVEN PINS PER SCHEDULE. FOR "t"<1/2", FASTENERS MUST PENETRATE THRU STEEL BASE MATERIAL. FOR "t"=1/2", FASTENERS MUST PENETRATE 9/16" MIN. FOR "t">3/4", FASTENERS MUST PENETRATE 7/16" MIN.
4. #10x3/4" LONG TEKS SCREW PER SCHEDULE.
5. 12"x12x20 GAGE STEEL PLATE WITH 4 #10x 3/4" LONG TEKS SCREWS (ONE EACH CORNER). PLATE SPACING PER SCHEDULE.

GENERAL NOTES:
INSTALL HILTI POWDER DRIVEN PINS PER ICC EVALUATION REPORT #ESR-1663.

TYPICAL TRACK ATTACHMENT

KEY	TYPE A	TYPE B	TYPE C	TYPE D
	ANCHOR SPACING	PIN SPACING	SCREW SPACING	PLATE SPACING
EXTERIOR	12" O.C.	12" O.C.	2 ROWS AT 6" O.C. (4" O.C. ROW SPACING)	12" O.C. (CONT. 12" WIDE PLATE)
INTERIOR	24" O.C.	16" O.C.	12" O.C.	48" O.C.

30 *TYPICAL STEEL TRACK AT STRUCTURE*
NO SCALE

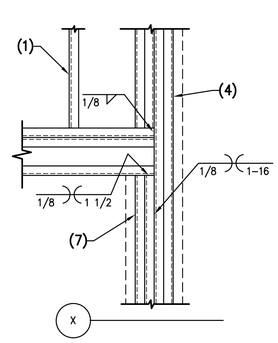

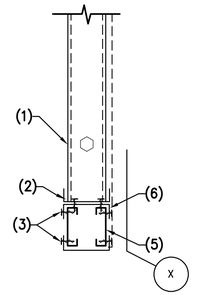

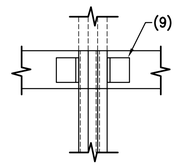

AT TOP OF STUD

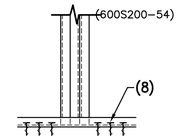

AT BOTTOM OF STUD

NOTES:

1. STEEL STUD WALL.
2. CONT. 16 GAGE TRACK W/ 2 – #12 TEK SCREWS AT 12" O.C. STAGGERED THROUGH TRACKS TO STUDS BELOW.
3. #12 TEK SCREWS AT 12" O.C., EACH LEG OF TRACK.
4. 2 (FULL HEIGHT) JAMB STUDS MIN. REFER TO SCHEDULE BELOW FOR ADDITIONAL STUDS WHERE REQUIRED.
5. STEEL HEADER PER SCHEDULE.
6. CONT. STEEL TRACK – TOP AND BOTTOM. REFER TO SCHEDULE FOR HEAVIER GAGE WHERE REQUIRED.
7. DOUBLE TRIMMER STUD, 16 GA. MIN. (ADD ONE ADDITIONAL STUDS AT EVERY 4'–0" OPENING. INCREASE AFTER 6'–0" WIDE).
8. TYPICAL PINS OR SCREWS AT 2" O.C. EACH SIDE FOR EVERY STUD IN THE GROUP.
9. TYPICAL CLIP ANGLE, ONE FOR EVERY TWO STUDS.

NOTE:
– FOR OPENING LARGER THAN SHOWN – SEE FRAMING PLAN
– ALL HEADER'S STUDS AND TRACKS SHALL BE UNPUNCHED MEMBERS.

NOTES:

1. 1/2"ø EXP. BOLTS AT 24" O.C. DO NOT CUT VERTICAL REINFORCING.
2. CONCRETE OR MASONRY WALL.
3. LINE OF STEEL STUD WALL AS OCCURS.
4. STEEL STUDS.

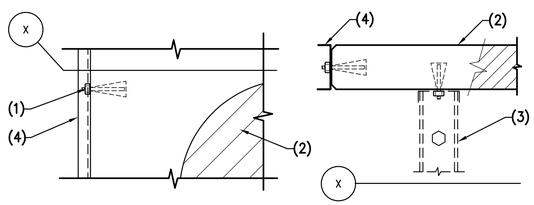

OPENING	*EXTERIOR WALLS*		*INTERIOR WALLS*			
	HEADER SIZE (6" WALL)	JAMB STUDS (6" WALL)	HEADER SIZE		JAMB STUDS	
			4" WALL	6" WALL	4" WALL	6" WALL
0" – 4'–0"	3– 6"x14 GA (600S200–68) STUDS AND 2– 6"x16 GA (600T125–43) TRACKS	3– 6"x16 GA (600S200–54)	2– 6"x20 GA (600S137–33) STUDS AND 2– 4"x18 GA (400T125–43) TRACKS	2– 6"x20 GA (600S137–33) STUDS AND 2– 6"x18 GA (600T125–43) TRACKS	2– 4"x20 GA (400S137–33)	2– 6"x20 GA (600S137–33)
4'–1" – 6'–0"	3– 6"x14 GA (600S200–68) STUDS AND 2– 6"x16 GA (600T125–54) TRACKS	4– 6"x16 GA (600S200–54)	2– 6"x20 GA (600S137–33) STUDS AND 2– 4"x18 GA (400T125–43) TRACKS	2– 6"x20 GA (600S137–33) STUDS AND 2– 6"x18 GA (600T125–43) TRACKS	2– 4"x20 GA (400S137–33)	2– 6"x20 GA (600S137–33)
CONTINUOUS SPANDREL OPENING	2– 6"x18 GA (600S162–43) STUDS AND 2– 6"x18 GA (600T125–43) TRACKS	N/A USE BRACE PER DETAIL	2– 6"x20 GA (600S137–33) STUDS AND 2– 4"x18 GA (400T125–43) TRACKS	2– 6"x20 GA (600S137–33) STUDS AND 2– 6"x18 GA (600T125–43) TRACKS	N/A USE BRACE PER DETAIL	N/A USE BRACE PER DETAIL
DESIGN HEIGHT IS 16'–0" OR LESS, IF GREATER HEIGHT REQUIRED USE BRACES ACROSS OPENING. VERIFY BRACES ARE ABOVE CEILING LINE.						

31 *TYPICAL STEEL STUD AT CONCRETE OR MASONRY WALL*
NO SCALE

29 *HEADER IN NON–BEARING STEEL STUD WALL*
NO SCALE

PK ASSOCIATES, LLC
6900 E. Belleview Ave. Suite 200
Greenwood Village, CO 80111
Phone: (720) 799.1058
Email: cadd@pkastructural.com
Website: www.pkastructural.com
Proj Num: 25113

Registered Professional Engineer (Civil) CERTIFICATE NO. 70374 JAMES APPLEYARD Date Signed 1/9/26 ARIZONA, U.S.A.

Issue Date:	10 JULY 2026	
Revisions:	Δ Description	Date

gabor lorant architects
3326 n. 3rd avenue suite 200
phoenix, arizona 85013
tel: 602.667.9090
fax: 602.667.9133
gaborlorant.com

gla Project No.: 24102

ARIZONA DEPARTMENT OF TRANSPORTATION
PROJECT DELIVERY AND OPERATIONS DIVISION
PROJECT MANAGEMENT GROUP
SAN SIMON PORT OF ENTRY
TYPICAL DETAILS

ROUTE I-10
MILEPOST 383
STRUCTURE NO.

F.H.W.A Arizona Division

STATE	PROJECT NO.	FEDERAL ID NO.	SHEET NO.	TOTAL SHEETS	RECORD DRAWING
ARIZ.	010 CH 383	010-F(238)T	143	200	

LOCATION: SAN SIMON PORT OF ENTRY (POE)

TRACS NO. F0728 01 C

DWG NO. **S505**
___ OF ___

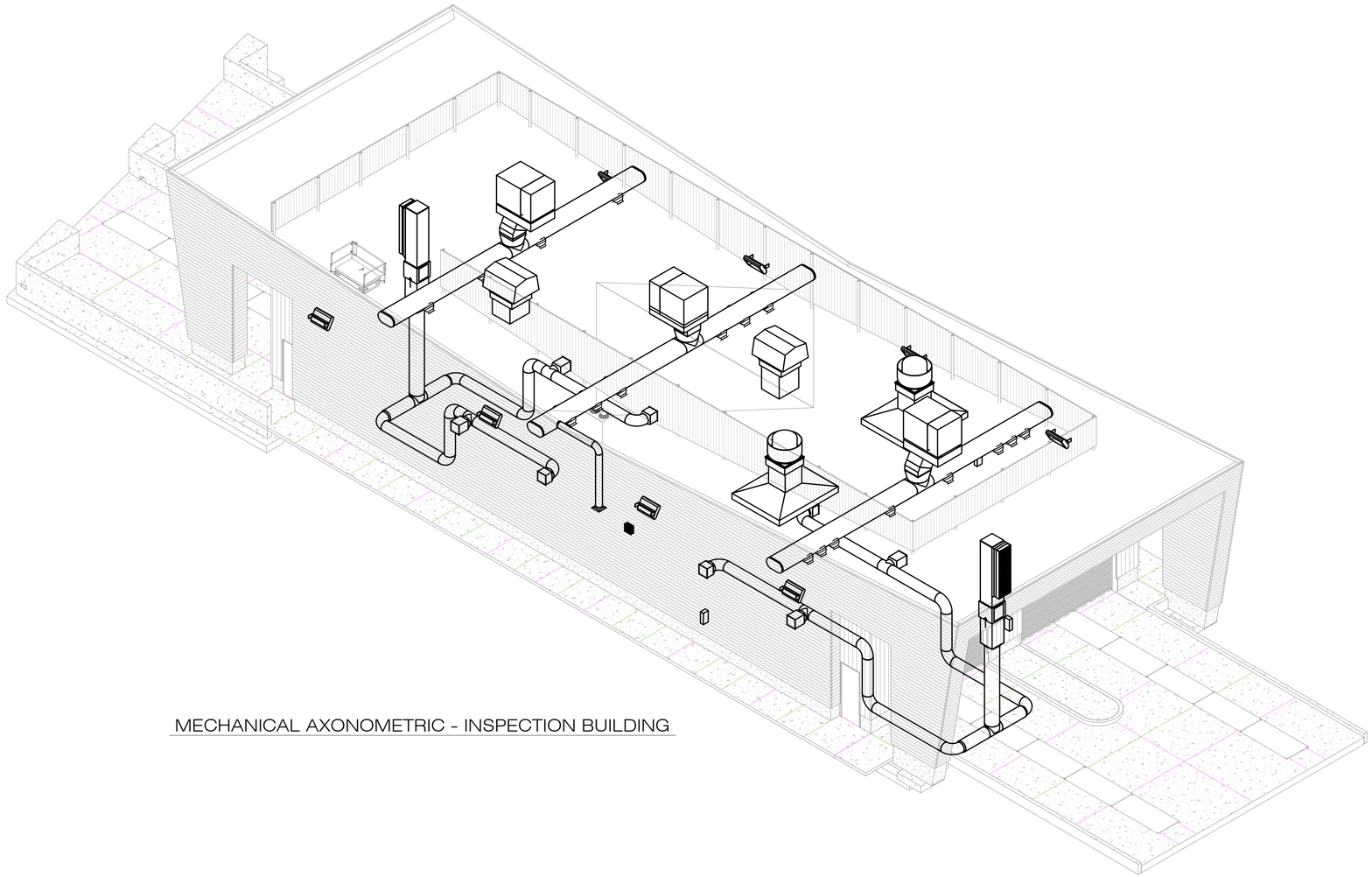

MECHANICAL AXONOMETRIC - INSPECTION BUILDING

APPLIED ENGINEERING
2800 S. RURAL RD. SUITE 101
TEMPE, AZ 85282 (480)968 3070
JOB NUMBER 25-041

Registered Professional Engineer Certificate No. 29717 GREGORY PISANO Date Signed 06-30-26 Arizona, U.S.A. Expires 12/31/2028

Issue Date:	10 JULY 2026	
Revisions:	# Description	Date

gabor lorant architects
3326 n. 3rd avenue suite 200
phoenix, arizona 85013
tel: 602.667.9090
fax: 602.667.9133
gaborlorant.com

gla Project No.: 24102

ARIZONA DEPARTMENT OF TRANSPORTATION
PROJECT DELIVERY AND OPERATIONS DIVISION
PROJECT MANAGEMENT GROUP

SAN SIMON PORT OF ENTRY
MECHANICAL AXONOMETRIC VIEW - INSPECTION BUILDING

ROUTE I-10
MILEPOST 383
STRUCTURE NO.

F.H.W.A Arizona Division	STATE	PROJECT NO.	FEDERAL ID NO.	SHEET NO.	TOTAL SHEETS	RECORD DRAWING
	ARIZ.	010 CH 383	010-F(238)T	144	200	

LOCATION SAN SIMON PORT OF ENTRY (POE)

DWG NO. **M00A**

TRACS NO. F0728 01C

___ OF ___

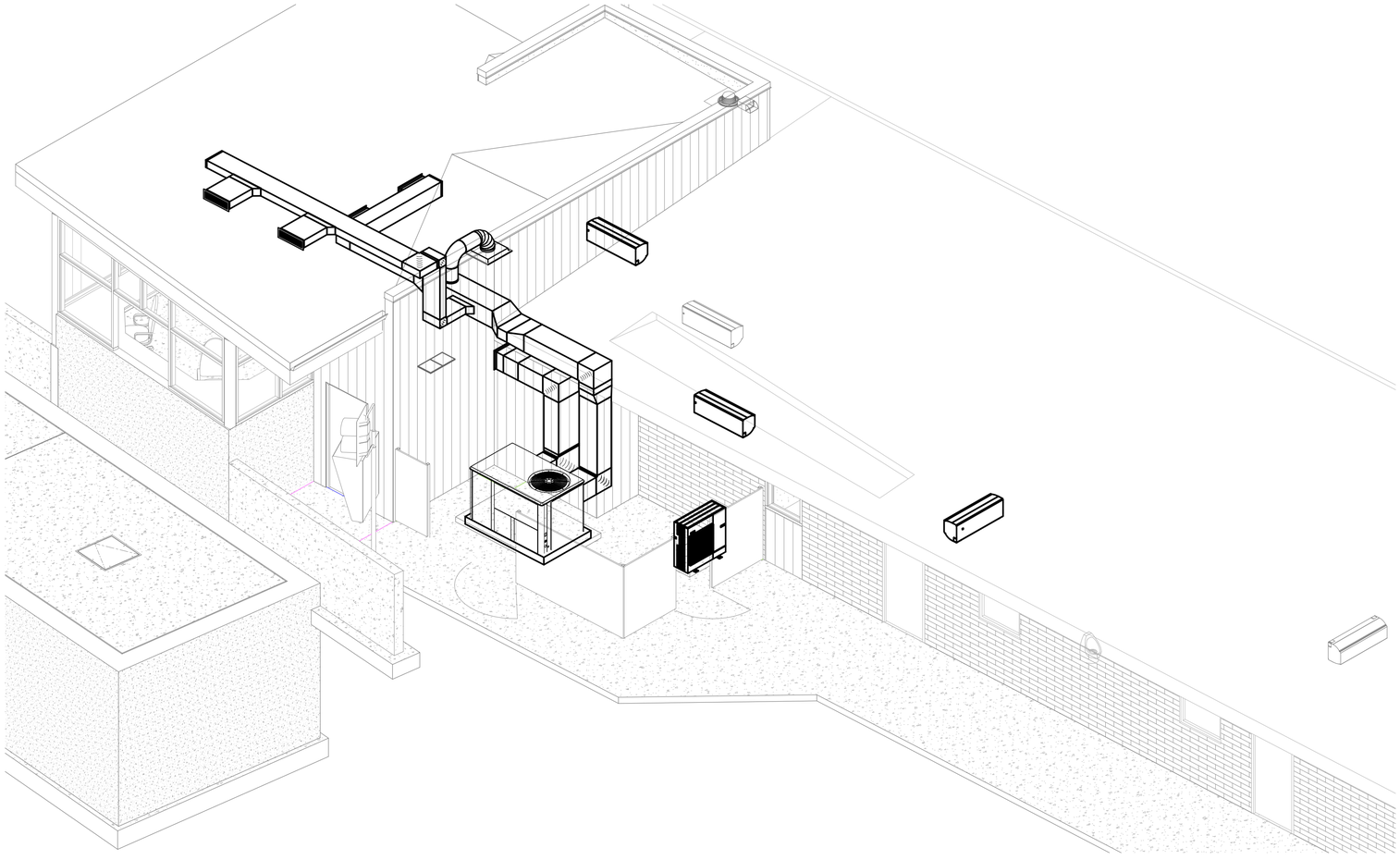

MECHANICAL AXONOMETRIC - ADMIN BUILDING

APPLIED ENGINEERING
2800 S. RURAL RD. SUITE 101
TEMPE, AZ 85282 (480)968 3070
JOB NUMBER 25-041

Certificate No. 29717 GREGORY PISANO Registered Professional Engineer Civil Arizona, U.S.A. Expires 12/31/2028

Issue Date:	10 JULY 2026	
Revisions:	Description	Date

gabor lorant architects
3326 n. 3rd avenue suite 200
phoenix, arizona 85013
tel: 602.667.9090
fax: 602.667.9133
gaborlorant.com

gla Project No.: 24102

ARIZONA DEPARTMENT OF TRANSPORTATION
PROJECT DELIVERY AND OPERATIONS DIVISION
PROJECT MANAGEMENT GROUP

SAN SIMON PORT OF ENTRY
MECHANICAL AXONOMETRIC VIEW - ADMIN BUILDING

ROUTE	MILEPOST	STRUCTURE NO.
I-10	383	

F.H.W.A Arizona Division	STATE	PROJECT NO.	FEDERAL ID NO.	SHEET NO.	TOTAL SHEETS	RECORD DRAWING
	ARIZ.	010 CH 383	010-F(238)T	145	200	

LOCATION: SAN SIMON PORT OF ENTRY (POE)

DWG NO. **M00B**

TRACS NO. F0728 01C

___ OF ___

MECHANICAL GENERAL REQUIREMENTS

1. ALL WORK SHALL COMPLY WITH ALL APPLICABLE FEDERAL, STATE AND LOCAL CODES, LAWS, ACTS AND ALL AUTHORITIES HAVING JURISDICTION INCLUDING, BUT NOT LIMITED TO THE 2018 IMC, 2018 IPC, 2018 IBC, 2018 IECC, 2017 NEC, 2018 IFC WITH AMENDMENTS AS ADOPTED BY THE STATE OF ARIZONA.

2. WORK SHALL INCLUDE ALL MATERIALS, LABOR, SERVICES AND EQUIPMENT NECESSARY TO PROVIDE AN OPERATING SYSTEM AS SHOWN ON THE PLANS. PLANS ARE SCHEMATIC AND ARE NOT INTENDED TO SPECIFY ALL INCIDENTAL HARDWARE OR IDENTIFY ALL OFFSETS OR DIFFICULTIES WHICH MAY BE ENCOUNTERED IN THE COURSE OF COMPLETING THE PROJECT. DO NOT SCALE THE PLANS. CONTRACTORS SHALL FIELD MEASURE AND CREATE SHOP DRAWINGS FOR DUCT FABRICATION.

3. FIELD VERIFY ALL CLEARANCES PRIOR TO FABRICATION OR ORDERING DUCTWORK. CONTRACTOR SHALL NOT CHARGE OWNER, ARCHITECT, GENERAL CONTRACTOR, ENGINEER OR OTHERS FOR ADJUSTMENT DUE TO FIELD CONDITIONS. CONTRACTOR MUST INCLUDE ITS PRICE TO COMPLETE PROJECT MISCELLANEOUS DUCT FITTINGS TO/FROM AIR HANDLERS, PACKAGE UNITS, DUCTS REQUIRING OFFSETS, SPECIAL FITTINGS AROUND BEAMS, COLUMNS OR STRUCTURAL BRACES. FIELD VERIFICATION AND INSTALLATION SHALL BE CONSIDERED INCLUDED IN BASE SCOPE OF WORK WITHOUT ADDITIONAL COMPENSATION. MECHANICAL CONTRACTOR SHALL OBTAIN ARCHITECTURAL PLANS AND VERIFY INTENDED CEILING HEIGHTS, SOFFIT LOCATIONS, AND OTHER ARCHITECTURAL FEATURE LOCATIONS AND SHALL ROUTE DUCTWORK ACCORDINGLY TO ALLOW CONSTRUCTION OF BUILDING ELEMENTS AFTER MECHANICAL INSTALLATION PHASE. LOCATE ALL DUCTS TO PROVIDE SUFFICIENT CLEARANCE FOR CEILING HARDWARE, ALL LIGHTS, AND ANY ARCHITECTURAL FEATURES IN CEILINGS. DUCT ROUTING MAY NEED TO BE FIELD ADJUSTED FROM PLANS FOR FIELD CONDITIONS AND FITTINGS PROVIDED TO SUIT. AIR FLOW TOTAL CROSS SECTIONAL AREA SHALL BE MAINTAINED THROUGH SUCH FITTINGS.

4. DISCREPANCIES ON MECHANICAL PLANS SHALL BE BROUGHT TO THE ATTENTION OF THE ENGINEER FOR CLARIFICATION PRIOR TO SUBMISSION OF BID TO CONSTRUCT MECHANICAL SYSTEM. DISCREPANCIES BROUGHT TO ENGINEER'S ATTENTION AFTER SUBMISSION OF BID SHALL NOT BE BILLABLE TO ENGINEER, ARCHITECT, CLIENT OR OTHERS AND SHALL BE THE RESPONSIBILITY OF THE CONTRACTOR TO REMEDY PER CODE AND WITH THE ASSISTANCE OF THE ENGINEER. ENGINEER WILL ASSIST CONTRACTOR IN DETERMINING REMEDY AND SHALL STRIVE IN GOOD FAITH TO FIND A LEAST COST AND CODE COMPLIANT SOLUTION TO SUCH DISCREPANCIES. CONTRACTOR'S SUBMISSION OF BID TO CONSTRUCT MECHANICAL SYSTEM IS SEEN AS AGREEMENT TO THESE TERMS.

5. CONTRACTOR SHALL VISIT SITE AND CONFIRM FINAL CONSTRUCTED SCREEN WALL HEIGHTS PRIOR TO ORDERING. CONTRACTOR SHALL CONSIDER HEIGHT OF SPECIFIED CURB OR SUPPORTS WHEN VERIFYING SUFFICIENT SCREENING. CONTACT ENGINEER IMMEDIATELY IF SCREENING IS INSUFFICIENT.

6. REFER TO DUCT CONSTRUCTION AND DUCT INSULATION SPECIFICATIONS.

7. BALANCING DAMPERS: ALL PLATE DAMPERS WITH A DIMENSION GREATER THAN 12 IN SHALL HAVE A CONTINUOUS SQUARE STEEL PIVOT ROD. MINIMUM PIVOT RODS SIZE IS 3/8". DAMPER BLADES TO BE CONSTRUCTED OF AT LEAST 2 GAUGES HEAVIER THAN THE DUCT IN WHICH THEY ARE INSTALLED AND NO LIGHTER THAN 22 GAUGE. DAMPERS SHALL FEATURE TIGHT FITTING SYNTHETIC BUSHINGS AND BEARINGS AT PIVOT ROD TO HOUSING CONTACT. DAMPERS SHALL BE MANUAL QUADRANT LOCKING TYPE WITH A STANDOFF TO ALLOW ROOM FOR INSULATION. "JIFFY" DAMPERS RELYING UPON A WING-NUT ON THE PIVOT ROD AXIS ARE NOT ACCEPTABLE. DAMPER INSTALLATIONS SHALL BE FREE OF OBJECTIONABLE VIBRATION AND NOISE. ACCEPTABLE MANUFACTURERS: GREENHECK, DAYTON, OR EQUAL.

8. PROVIDE EACH DUCT SUPPLY BRANCH WITH OWNER ADJUSTABLE VOLUME CONTROL USING A LOCKING BRANCH DAMPER 18" FROM MAIN TAKEOFF OR OBD IN DEVICE IF BRANCH IS INACCESSIBLE. PROVIDE AUTOMATIC SHUTOFF DAMPERS ON EXHAUST SYSTEMS AND SUPPLY SYSTEMS WITH AIRFLOW GREATER THAN 3,000 CFM PER IMC. SEE PLANS FOR MOTORIZED DAMPER LOCATIONS, SIZES, AND REQUIREMENTS. OUTSIDE AIR SYSTEMS SHALL BE CAPABLE OF REDUCING OUTSIDE AIR CFM TO THE CODE REQUIRED OUTSIDE AIR CFM REQUIRED BY ITEM #1 ABOVE. PROVIDE CABLE OPERATED DAMPERS (YOUNG REGULATORS, OR EQUAL) FOR DAMPERS LOCATED ABOVE INACCESSIBLE CEILINGS.

9. FIELD VERIFY EXACT LOCATIONS OF STRUCTURE AND INSTALL NEW EQUIPMENT ACCORDINGLY. FIELD VERIFY 10' CLEARANCE BETWEEN BUILDING AIR INTAKES BUILDING, EXHAUST, MECHANICAL VENTS, AND PLUMBING VENTS PER CODE.

10. PROVIDE AS-BUILT DRAWINGS AND ALL EQUIPMENT INSTALLATION AND OPERATIONS MANUALS "IOM" TO OWNER FOLLOWING PROJECT COMPLETION.

11. ALL HVAC EQUIPMENT SHALL BE UL LISTED AND INSTALLED IN ACCORDANCE WITH MANUFACTURER'S INSTRUCTIONS.

12. COORDINATE WITH ELECTRICAL CONTRACTOR TO PROVIDE COURTESY 120V OUTLET IN WEATHERPROOF ENCLOSURE FOR MECHANICAL EQUIPMENT SERVICE. HARDWARE AND INSTALLATION BY ELECTRICAL CONTRACTOR. PROVIDE 1 RECEPTACLE WITHIN 25 FEET OF EACH AH, HP, EF, RF UNIT.

13. MECHANICAL CONTRACTOR SHALL PROVIDE ALL CONTROLS SYSTEMS / EQUIPMENT, SEE CONTROLS SPECIFICATIONS AND SEQUENCE OF OPERATIONS.

14. CONDENSATE PIPING: SEE PLUMBING PLANS FOR CONDENSATE PIPING.

15. SEE STRUCTURAL PLANS FOR EQUIPMENT SUPPORT AND BRACING. DO NOT CUT STRUCTURAL MEMBERS.

16. PROVIDE EMBOSSED MICARTA ID LABEL FOR EACH PIECE OF HVAC EQUIPMENT NEAR DISCONNECT. LABEL SHALL IDENTIFY ALL MECHANICAL EQUIPMENT WITH 1" HIGH STENCILED LETTERS OF CONTRASTING COLOR. HANDWRITTEN LABELS WITH MARKERS SHALL NOT BE ALLOWED. LABEL SHALL IDENTIFY EACH PIECE OF EQUIPMENT PER PLAN IDENTIFICATION NUMBER.

17. CONTRACTOR TO PROVIDE SIGNED AND SEALED TEST AND BALANCE REPORT. TEST AND BALANCE OF SYSTEM TO BE PERFORMED BY AN AABC OR NEBB CONTRACTOR CERTIFIED IN THE STATE OF ARIZONA. PRIOR TO FINAL INSPECTION, PROVIDE A COPY OF THE SIGNED AND SEALED AIR BALANCE REPORT TO THE MECHANICAL ENGINEER FOR FINAL APPROVAL IN ACCORDANCE WITH IMC SECTION 107 AND 403. CONTRACTOR SHALL DEMONSTRATE THAT ALL NEW EQUIPMENT AND ALL AIR DEVICES ARE BALANCED AND ADJUSTED AS SHOWN ON PLANS. THE STATE INSPECTOR SHALL RECEIVE A COPY OF A THIRD PARTY CERTIFIED AIR BALANCE REPORT CONDUCTED IN ACCORDANCE WITH AABC OR NEBB TESTING STANDARDS PRIOR TO THE ISSUE OF THE CERTIFICATE OF OCCUPANCY.

18. EQUIPMENT AND DEVICES SHOWN ON PLANS ARE DIAGRAMMATIC AND MAY NOT ACCOUNT FOR ALL CONFLICTS THAT ARISE IN THE FIELD DURING CONSTRUCTION. CONTRACTOR SHALL COORDINATE WITH OTHER TRADES AND LOCATE EQUIPMENT AND COMPONENTS INCLUDING BUT NOT LIMITED TO DAMPERS, ACTUATORS, FAN COILS, ETC SUCH THAT THEY ARE ACCESSIBLE. SUFFICIENT SPACE SHALL BE PROVIDED FOR EQUIPMENT SERVICE, REPAIR, AND REPLACEMENT.

19. PENETRATIONS INTO OR THROUGH FIRE-RESISTANT-RATED WALL ASSEMBLIES INCLUDING FIRE WALLS, FIRE BARRIERS, SMOKE BARRIER WALLS AND FIRE PARTITIONS SHALL COMPLY WITH IBC 2018. THROUGH PENETRATIONS SHALL BE PROTECTED BY AN APPROVED FIRE STOP SYSTEM INSTALLED AS TESTED IN ACCORDANCE WITH ASTM E 814 OR UL 1479 AND SHALL HAVE AN "F" RATING OF NOT LESS THAN THE REQUIRED FIRE RESISTANCE RATING OF THE WALL PENETRATED. DUCT PENETRATIONS THAT REQUIRE DAMPERS SHALL COMPLY WITH IMC 2018. FOR COMBINATION FIRE SMOKE DAMPER PENETRATIONS REFER TO DEVICE SCHEDULE AND PLANS FOR TYPE AND LOCATIONS.

DEFINITIONS:
PROVIDE - FURNISH AND INSTALL.
FURNISH - DELIVER EQUIPMENT AND/OR MATERIALS TO SITE.
INSTALL - PHYSICALLY PLACE IN POSITION AND PUT INTO OPERATION.

MECHANICAL ABBREVIATIONS

ABBV	DESCRIPTION	ABBV	DESCRIPTION
AFF	ABOVE FINISHED FLOOR	KW	KILOWATT
AD	ACCESS DOOR	LAT	LEAVING AIR TEMPERATURE
AC	AIR CONDITIONING UNIT	LWT	LEAVING WATER TEMPERATURE
AHU	AIR HANDLING UNIT	LTG	LIGHTING
ALT	ALTERNATE	MFR	MANUFACTURER
AP	ACCESS PANEL	MAX	MAXIMUM
BAS	BUILDING AUTOMATION SYSTEM	MECH	MECHANICAL
BDD	BACKDRAFT DAMPER	MC	MECHANICAL CONTRACTOR
BC	BOOSTER COIL	MBH	THOUSAND BTU/ HOUR
BOT	BOTTOM	MIN	MINIMUM
BOD	BOTTOM OF DUCT	MAT	MIXED AIR TEMPERATURE
BOP	BOTTOM OF PIPE	MCC	MOTOR CONTROL CENTER
BHP	BRAKE HORSEPOWER	NEG	NEGATIVE
BLDG	BUILDING	NEUT	NEUTRAL
CH	CABINET HEATER	NC	NORMALLY CLOSED
CAP	CAPACITY	NO	NORMALLY OPEN
CLG	CEILING	NA	APPLICABLE
CV	CONSTANT VOLUME	NIC	NOT IN CONTRACT
CW	COLD WATER	NTS	NOT TO SCALE
CAI	COMBUSTION AIR INTAKE	OAT	OUTSIDE AIR TEMPERATURE
CONN	CONNECTION	OBD	OPPOSED BLADE DAMPER
CONT	CONTINUED	PBD	PARALLEL BLADE DAMPER
CC	COOLING COIL	POS	POSITIVE
CT	COOLING TOWER	PSI	POUNDS PER SQUARE INCH
CPR	COPPER	PHC	PREHEAT COIL
CFM	CUBIC FEET PER MINUTE	PRESS	PRESSURE
DET	DETAIL	PD	PRESSURE DROP
DIA,Ø	DIAMETER	PRV	PRESSURE REDUCING VALVE
DIF	DIFFUSER	P	PUMP
DIM	DIMENSION	QTY	QUANTITY
DAT	DIS. AIR TEMPERATURE	RA	RETURN AIR
DG	DOOR GRILLE	RAT	RETURN AIR TEMPERATURE
DWG	DRAWING	RF	RETURN FAN
DSD	DUCT SMOKE DETECTOR	R/E	RETURN/EXHAUST
DTR	DUCT THROUGH ROOF	REF	REFERENCE
EA	EACH / EXHAUST AIR	REG	REGISTER
EC	ELECTRICAL CONTRACTOR	RHC	REHEAT COIL
EL	ELEVATION	REQD	REQUIRED
EMER	EMERGENCY	REV	REVISION
EAT	ENTERING AIR TEMPERATURE	RM	ROOM
EWT	ENT. WATER TEMPERATURE	SCH	SCHEDULE
EQUIP	EQUIPMENT	SECT	SECTION
EXH	EXHAUST	SHT	SHEET
EXIST	EXISTING	SA	SOUND ATTENUATOR
FC	FAN COIL	SD	SMOKE DAMPER
FD	FIRE DAMPER	SPEC	SPECIFICATION
FOB	FD FLAT ON BOTTOM	SS	STAINLESS STEEL
FOT	FLAT ON TOP	STD	STANDARD
FPM	PER MINUTE	STM	STEAM
FLEX	FLEXIBLE	STL	STEEL
FLR	FLOOR	SF	SUPPLY FAN
FLD	FLOOR DRAIN	SQFT	SQUARE FEET
FSD	FIRE / SMOKE DAMPER	SUSP	SUSPENDED
FUT	FUTURE	SW	SWITCH
GPM	GALLONS PER MINUTE	SWGR	SWITCHGEAR
GALV	GALVANIZED	TAB	TEST AND BALANCE
GRD	GRADE	TEMP	TEMPERATURE
GR	GRILLE	TYP	TYPICAL
HC	HEATING COIL	UL	UNDERWRITERS LABORATORY
HV	HEATING/VENTILATING UNIT	UH	UNIT HEATER
HVAC	HEATING/VENTILATING/AC	VAV	VARIABLE AIR VOLUME
HT	HEIGHT	VFD	VARIABLE FREQUENCY DRIVE
HOR	HORIZONTAL	VENT	VENTILATION
HP	HORSEPOWER	VERT	VERTICAL
HW	HOT WATER	VD	VOLUME DAMPER
H	HUMIDIFIER	VV	VARIABLE VOLUME
IN	INCH	WG	WATER GAGE

*** NOT ALL ABBREVIATIONS ARE APPLICABLE FOR THIS PROJECT ***

MECHANICAL SYMBOLS LEGEND

SINGLE LINE DUCTWORK	DOUBLE LINE DUCTWORK	DESCRIPTION
EQ #	EQUIPMENT TYPE UNIQUE DESIGNATION	MECHANICAL EQUIPMENT TAG
CD CFM SIZE	DIFFUSER TAG AIR QUANTITY (CFM) NECK SIZE	GRILLE, REGISTER OR DIFFUSER TAG WITH CFM AND NECK SIZE.
A M-1	SECTION DESIGNATION SHEET NUMBER	MECHANICAL SECTION TAG.
SUPPLY RETURN EXHAUST ROUND SIDEWALL LINEAR		GRILLES REGISTERS AND DIFFUSERS.
WXD X'Ø	WXD X'Ø	RECTANGULAR AND ROUND DUCT. DUCT SIZES ARE IN INCHES. DUCT SIZES REPRESENT INSIDE DIMENSIONS OF DUCTWORK.
WXD WXD	WXD WXD	45° TAP USED AT BRANCH DUCTS ONLY.
WXD X'Ø	WXD WXD	CONICAL TAP USED AT ROUND BRANCH DUCTS.
		90° ELBOW WITH SINGLE RADIUS TURNING VANES CURVED ELBOW (MIN. RADIUS R = 1.5 WIDTH)
EQMT.	WXD EQMT.	FLEXIBLE DUCT CONNECTION
		SPIN-IN FLEX DUCT TAKE-OFF WITH MANUAL BALANCE DAMPER. FLEX DUCT NOT TO EXCEED 8'-0"
		BALANCING DAMPER (USE OBD IN RECTANGULAR DUCTS AND PLATE DAMPER IN ROUND DUCTS UNLESS OTHERWISE NOTED)
M	M	MOTORIZED DAMPER.
BDD VD	BDD VD	BACKDRAFT DAMPER / MANUAL VOLUME DAMPER.
		ACCESS PANEL.
SD FD FSD	SD FD FSD	SMOKE DAMPER, FIRE DAMPER, AND COMBINATION FIRE SMOKE DAMPER WITH ACCESS PANEL.
SUPPLY RETURN EXHAUST	SUPPLY RETURN EXHAUST	DUCTWORK DOWN.
SUPPLY RETURN EXHAUST	SUPPLY RETURN EXHAUST	DUCTWORK UP.
UP DOWN	UP DOWN	ROUND DUCTWORK.
WXD WXD	WXD WXD	DUCT TRANSITION
DSD CO2	DSD CO2	DUCT SMOKE DETECTOR / CO2 SENSOR
T S H RS CO CO2		PROGRAMMABLE THERMOSTAT, TEMPERATURE SENSOR, HUMIDISTAT, REMOTE SENSOR, CO SENSOR, CO2 SENSOR (ALL UNITS MOUNTED @ 48" AFF)
(N) (E) (R)		NEW EQUIPMENT EXISTING EQUIPMENT TO REMAIN RELOCATE EXISTING

*** NOT ALL SYMBOLS ARE APPLICABLE FOR THIS PROJECT ***

MECHANICAL SHEET INDEX

SHEET NUMBER	SHEET TITLE
M00A	MECHANICAL AXONOMETRIC - INSPECTION BUILDING
M00B	MECHANICAL AXONOMETRIC - ADMIN BUILDING
M001	MECHANICAL LEGEND, SYMBOLS, AND SPECIFICATIONS
M002	MECHANICAL SCHEDULES AND SPECIFICATIONS
M003	MECHANICAL SCHEDULES AND CONTROL SPECIFICATIONS
M030	MECHANICAL DEMOLITION FLOOR PLAN - ADMIN BUILDING
M100	MECHANICAL FLOOR PLAN - ADMIN BUILDING
M110	MECHANICAL FLOOR PLAN - INSPECTION BUILDING PIT LEVEL EXHAUST SYSTEMS
M111	MECHANICAL FLOOR PLAN - INSPECTION BUILDING
M210	MECHANICAL ROOF PLAN - INSPECTION BUILDING
M300	MECHANICAL DETAILS
M301	MECHANICAL DETAILS AND OSA VENTILATION CALCULATIONS

CONTRACTOR COORDINATION SPECIFICATIONS

AREAS ABOVE CEILINGS AT SOME LOCATIONS HAVE RESTRICTED SPACE LIMITATIONS. CONTRACTOR SHALL REVIEW PLANS AND FIELD CONDITIONS, ATTEND COORDINATION MEETINGS WITH ALL TRADES PRESENT, AND SET ALL DUCT, FIRE SPRINKLER PIPE, PLUMBING, DAMPER, ELECTRICAL, CABLE TRAY, AND CONDUIT ROUTES TO ACCOMMODATE ALL TRADES, ALL BUILDING ELEMENTS, LIGHTING, FIRE, AND EQUIPMENT. FIELD VERIFY ALL REQUIRED CLEARANCES AND EQUIPMENT LOCATIONS PRIOR TO COMMENCING PROJECT, FABRICATING OR INSTALLING SYSTEMS. TRADES SHALL ESTABLISH A RIGHT-OF-WAY PLAN, AND SET DUCT AND PIPE ELEVATIONS PRIOR TO CONSTRUCTION AND CLOSELY COORDINATE ROUTING TO AVOID CONFLICTS. CONTRACTOR SHALL NOT CHARGE OWNER, ARCHITECT, GENERAL CONTRACTOR, ENGINEER OR OTHERS FOR FIELD ADJUSTMENT DUE TO FIELD CONDITIONS. CONTRACTOR MUST INCLUDE IN FEE TO COMPLETE PROJECT MISCELLANEOUS DUCT, TRANSITIONS, AND OFFSETS. PRIOR CLOSE COORDINATION SHALL BE CONSIDERED INCLUDED IN BASE SCOPE OF WORK WITHOUT ADDITIONAL COMPENSATION FEES. CONTRACTOR SHALL OBTAIN ARCHITECTURAL, MECHANICAL, PLUMBING, ELECTRICAL, AND FIRE SPRINKLER PLANS AND VERIFY INTENDED EQUIPMENT LOCATIONS, CEILING HEIGHTS, AND OTHER ARCHITECTURAL FEATURE LOCATIONS AND SHALL INSTALL AND ROUTE SYSTEMS ACCORDINGLY TO ENSURE EQUIPMENT FITS AND THAT EQUIPMENT SERVICE ACCESS IS UNOBSTRUCTED. FIELD ROUTING OF SYSTEMS MAY NEED TO BE ADJUSTED FROM THESE SCHEMATIC PLANS, AND ANY REQUIRED FITTINGS SHALL BE PROVIDED TO SUIT.

SUBMITTAL PROCESS SPECIFICATIONS

PRIOR TO ORDERING, SUBMITTALS REVIEWED BY THE ENGINEER ARE REQUIRED FOR ALL ITEMS LISTED ON THE MECHANICAL SCHEDULES.

ALL MECHANICAL EQUIPMENT SUBMITTED SHALL BE ORGANIZED AND PACKAGED TOGETHER AND COMBINED INTO A MAXIMUM OF (3) SEPARATE PDF FILE DOCUMENTS. SUBMITTALS PACKAGES SHALL INCLUDE A MINIMUM OF (10) SUBMITTALS ITEMS. PARTIAL AND INDIVIDUAL SUBMITTALS WILL BE REJECTED AND RETURNED TO BE COMBINED AS DESCRIBED HEREIN (EXCLUDING THE CONTROLS SUBMITTAL). NOTE THAT A SINGLE PDF SUBMITTAL PACKAGE WITH ALL ALL MECHANICAL EQUIPMENT INCLUDED WILL EXPEDITE THE REVIEW PROCESS.

ALL SUBMITTALS AND RESUBMITTALS: SHALL USE THE FOLLOWING FORMAT OR SHALL BE RETURNED FOR CORRECTIONS UNTIL FORMATTED AS FOLLOWS:
1. ORGANIZED AND COMBINED INTO A MAXIMUM OF (3) PDF DOCUMENTS AS LISTED ABOVE.
2. SUBMITTED AS A SINGLE ELECTRONIC PDF FILE IDENTIFIED AS A FIRST SUBMITTAL, OR AS REVISED SUBMITTAL WITH THE CORRESPONDING SUBMITTAL NUMBER IDENTIFIED AS "RESUBMITTAL #"; BEGINNING WITH "RESUBMITTAL 1" AND CONTINUING WITH SEQUENTIAL NUMBERING ON ANY RESUBMITTALS.
3. SUBMITTAL PRODUCT DATA SHALL BE LABELED IN RED BOLDFACE TEXT IN THE TOP RIGHT HAND CORNER OF THE FIRST PAGE WITH THE EQUIPMENT IDENTIFICATION TAG AS LABELED ON PLAN SCHEDULES (UNIDENTIFIED CUT SHEETS AND PRODUCT DATA WILL BE RETURNED).
4. REQUIRED OPTIONS LISTED ON THE CONSTRUCTION DOCUMENT SCHEDULES SHALL BE CLEARLY IDENTIFIED WITH EACH OPTION ON THE SUBMITTAL MARKED WITH A RED BOX, CIRCLE, CHECK, OR OTHER SIMILAR CONSPICUOUS INDICATION THAT THE SUBMITTED DEVICE'S OPTIONS MATCH THE PLAN SCHEDULE NOTES (GENERIC EQUIPMENT DATA THAT HAS UNIDENTIFIED OPTIONS WILL BE RETURNED).
5. CONTRACTOR/SUPPLIER SUBMITTAL IS A PRESENTATION TO THE ENGINEER THAT THE EQUIPMENT SUBMITTED IS EQUIVALENT TO THAT SPECIFIED ON THE CONSTRUCTION DOCUMENTS. EQUIPMENT SUBSTITUTIONS WHICH INCLUDE OR REQUIRE DEVIATIONS FROM THE CONSTRUCTION DOCUMENT REQUIREMENTS SHALL BE CLEARLY IDENTIFIED BY THE CONTRACTOR/SUPPLIER DIRECTLY ON THE FIRST PAGE OF THE CUT SHEET WITH A CLEAR EXPLANATION OF THE REASON(S) FOR NON-COMPLIANCE OR EQUIVALENCE WITH EQUIPMENT SCHEDULES. FAILURE OF SUBSTITUTED EQUIPMENT TO PERFORM TO THE LEVEL SPECIFIED IN THE EQUIPMENT SCHEDULE MAY REQUIRE REPLACEMENT OF SUBSTITUTED EQUIPMENT IF DEVIATIONS ARE NOT CLEARLY IDENTIFIED.
6. ALL RESUBMITTALS OF EQUIPMENT OR MATERIALS PREVIOUSLY REJECTED BY THE ENGINEER SHALL BE RESUBMITTED AS A SINGLE ELECTRONIC PDF FILE. ALL RESUBMITTALS SHALL INCLUDE CUT SHEETS OF ONLY THE ITEMS THAT HAVE BEEN RETURNED/REJECTED BY THE ENGINEER ON THE FIRST SUBMITTAL (COMPLETE RESUBMITTALS OF ALL PROJECT EQUIPMENT WILL BE RETURNED TO BE REDUCED DOWN TO RESUBMITTAL ITEMS ONLY).
7. ALL RESUBMITTALS SHALL INCLUDE CUT SHEET AND PRODUCT DATA UPDATES TO SHOW CONFORMANCE TO CONSTRUCTION DOCUMENT REQUIREMENTS AND AS INDICATED AND REQUIRED BY THE ENGINEER IN THE PREVIOUS SUBMITTAL REVIEWS.
8. ON ALL RESUBMITTALS CLEARLY IDENTIFY ANY CHANGES MADE OTHER THAN THOSE REQUESTED BY THE ENGINEER IN THE PREVIOUSLY RETURNED/REJECTED SUBMITTAL. PROVIDE A STATEMENT EXPLAINING ANY CHANGES WHICH WERE NOT PROMPTED BY THE ENGINEER'S PREVIOUS REVIEW.

APPLIED ENGINEERING
2800 S. RURAL RD. SUITE 101
TEMPE, AZ 85282 (480)968 3070
JOB NUMBER 25-041

Certificate No. 29717 — GREGORY PIRAINO — Professional Engineer — Expires 12/31/2028

Issue Date:	10 JULY 2026	
Revisions:	# Description	Date

gabor lorant architects
3326 n. 3rd avenue suite 200
phoenix, arizona 85013
tel: 602.667.9090
fax: 602.667.9133
gaborlorant.com
gla Project No.: 24102

ARIZONA DEPARTMENT OF TRANSPORTATION
PROJECT DELIVERY AND OPERATIONS DIVISION
PROJECT MANAGEMENT GROUP

SAN SIMON PORT OF ENTRY
MECHANICAL LEGEND, SYMBOLS, AND SPECIFICATIONS

ROUTE I-10
MILEPOST 383
STRUCTURE NO.

F.H.W.A Arizona Division	STATE	PROJECT NO.	FEDERAL ID NO.	SHEET NO.	TOTAL SHEETS	RECORD DRAWING
	ARIZ.	010 CH 383	010-F(238)T	146	200	

LOCATION: SAN SIMON PORT OF ENTRY (POE)

TRACS NO. F0728 01C

DWG NO. M001

___ OF ___

DUCT CONSTRUCTION AND INSULATION SPECIFICATIONS

DUCT TYPE	INSULATION TYPE	INSULATION MINIMUM R VALUE	NOTES
CONCEALED SUPPLY, RETURN, OSA MAINS, AND BRANCHES IN UNCONDITIONED SPACES AND PLENUMS BELOW ROOF, AND DUCTS INSIDE THE BUILDING ENVELOPE	EXTERNALLY WRAPPED WITH FOIL BACKED INSULATION	R-6	1-10
SUPPLY AND RETURN DUCTS LOCATED OUTSIDE THE BUILDING ENVELOPE AND WITHIN EXTERIOR ELEMENTS AND SOFFITS	INTERNALLY LINED	R-8	1-10
RECTANGULAR VEHICLE EXHAUST DUCTS AND PLENUMS JUST UPSTREAM AND DOWNSTREAM FROM THE VEHICLE EXHAUST FANS EF-1, EF-2, EF-3, & EF-4.	INTERNALLY LINED FOR NOISE ABATEMENT	R-6	1-10
ALL EXPOSED FLAT OVAL EVAP SUPPLY, RECTANGULAR, AND ROUND EXHAUST DUCTS VISIBLE TO OCCUPANTS IN THE INSPECTION BAYS	UN-INSULATED GALVANIZED STEEL (FLANGED) PER PLANS. PRIME AND PAINT COLOR PER ARCHITECT	NA	1-11

NOTES:
1. ALL DUCT DIMENSIONS SHOWN ON PLANS ARE NET INSIDE DIMENSIONS. CONTRACTOR SHALL INCREASE DUCT DIMENSIONS FOR INTERNALLY LINED DUCT TO ACCOUNT FOR THE THICKNESS OF INSULATION LINER WHERE REQUIRED.
2. ALL DUCTWORK SHALL BE LOCK-FORMED QUALITY STEEL WITH EXCEPTION OF FLEXIBLE DUCT BRANCH ENDS ONLY. ALL DUCTS WITH A DIMENSION OVER 16" SHALL BE FLANGED TYPE CONNECTIONS. CONCEALED DUCT BRANCHES SHALL BE ROUND STEEL. ALL DUCTS SHALL BE SUSPENDED FROM STRUCTURE OF BUILDING PER CODE.
3. DUCT SEAMS AND FLANGES SHALL BE TIGHT AND WITHOUT VISIBLE GAPS.
4. DUCT CONSTRUCTION SHALL BE SMACNA CLASS A: ALL TRANSVERSE JOINTS, LONGITUDINAL SEAMS, AND DUCT WALL PENETRATIONS SHALL BE SEALED. ALL SEAMS ON HIDDEN RIGID DUCTS SHALL BE SEALED USING UL 181A OR 181B MASTICS. EXCEPTION: CONTINUOUSLY WELDED AND LOCKING-TYPE LONGITUDINAL JOINTS.
5. ALL WORK OUTDOORS SHALL BE WEATHER SEALED AND WATERTIGHT.
6. FLEXIBLE DUCTS SHALL BE UL 181 LISTED, CLASS 1, WITH AN INNER CORE OF STEEL WIRE HELIX WRAPPED IN FIBERGLASS AND SHEATHED IN A DOUBLE LAMINATION OF POLYESTER. FLEX DUCT SHALL HAVE A MINIMUM R VALUE OF 6.0 AND SHALL BE RATED FOR 4" WG POSITIVE AND .75" WG NEGATIVE PRESSURES (MINIMUM). UP TO 8 FEET MAXIMUM U.L. LISTED INSULATED FLEXIBLE DUCT IS PERMISSIBLE AT BRANCH ENDS IN CONCEALED LOCATIONS ONLY. ALL FLEXIBLE DUCTWORK SHALL BE INSTALLED PER CODE FULLY EXTENDED WITHOUT CRIMPING OR RESTRICTIVE SHORT RADIUS BENDS.
7. PROVIDE TURNING VANES AT ALL RECTANGULAR ELLS AND TEES PER DETAILS ON PLANS.
8. ALL DUCTS AND FITTINGS SHALL BE FABRICATED PER LATEST EDITION SMACNA.
9. ALL MATERIALS EXPOSED WITHIN DUCTS OR AS INSULATION AROUND DUCTS SHALL HAVE A FLAME SPREAD INDEX OF NOT MORE THAN 25 AND A SMOKE DEVELOPMENT RATING OF NOT MORE THAN 50. UL LISTING REQUIRED. ALL INSULATION CONTAINING FIBROUS MATERIALS EXPOSED TO AIR FLOW SHALL BE RATED FOR THAT EXPOSURE OR SHALL BE ENCAPSULATED. INSULATING PROPERTIES FOR ALL MATERIALS SHALL MEET OR EXCEED CODE REQUIREMENTS. POLYSTYRENE PRODUCTS SHALL MEET AMERICAN SOCIETY FOR TESTING AND MATERIALS (ASTM) C578 91. ALL INSULATION SHALL BE LOW EMITTING WITH NOT GREATER THAN .05 PPM FORMALDEHYDE EMISSIONS. THE MAXIMUM FLAME SPREAD AND SMOKE DEVELOPED INDEX FOR INSULATION SHALL MEET THE REQUIREMENTS OF THE APPLICABLE LOCAL CODES AND ORDINANCES ADOPTED BY THE JURISDICTION IN WHICH THE BUILDING IS LOCATED.
10. SEE ARCHITECTURAL PLANS FOR FIRE RATED PARTITIONS AND PLANS FOR FIRE DAMPER LOCATIONS. ALL SUPPLY, RETURN, EXHAUST, TRANSFER, AND OSA DUCTS CROSSING THROUGH FIRE RATED PARTITIONS WITHOUT FIRE DAMPERS SHALL BE CONSTRUCTED OF STEEL NOT LESS THAN 26 GAUGE IN THICKNESS AND SHALL BE CONTINUOUS FROM THE AIR-HANDLING APPLIANCE TO THE AIR TERMINAL IN ACCORDANCE WITH 2018 IMC SECTION 607.5.3 EXCEPTION 4.
11. ALL DUCTS VISIBLE AND EXPOSED TO OCCUPANTS SHALL BE SUPPORTED WITH UNISTRUT, ALL-THREAD RODS, AND FULLY ENCIRCLING STEEL BANDS PER DETAILS ON PLANS. DO NOT USE FLAT STRAP OR WIRE HANGERS WHICH ARE NOT ACCEPTABLE FOR EXPOSED LOCATIONS. SEE DETAILS ON PLANS FOR EVAP DUCTS.

UNDERGROUND DUCT SCHEDULE AND SPECIFICATIONS

MARK	MANUFACTURER	MODEL	SERVICE	NOTES
1	AQC INDUSTRIES	BLUEDUCT	ALL UNDERGROUND DUCTS	1-5

1. PROVIDE COMPLETE UNDERGROUND DUCT SYSTEM IN ACCORDANCE WITH THE FOLLOWING:
   - 1.1. COMPLETE DUCT SYSTEM (INCLUDING: PLENUMS, ROUND DUCT, RUN-OUTS, DIFFUSER BOOTS, TRENCH BLOCKS, ETC.). SYSTEM AND FITTINGS SHALL BE FROM ONE MANUFACTURER AND BE OF THE SAME MATERIAL, CONSTRUCTION AND CONNECTION METHOD THROUGHOUT. FIELD MADE DUCT COMPONENTS ARE NOT ACCEPTABLE.
   - 1.2. INCLUDE THE COMPLETE UNDERGROUND DUCT SYSTEM INCLUDING PLENUMS AND DIFFUSER BOOTS.
   - 1.3. ALL DUCT AND FITTINGS SHALL BE CONSTRUCTED PER SMACNA'S DUCT CONSTRUCTION STANDARDS (+10 W.G.).
   - 1.4. PROVIDE ELBOWS, DUCT, DIFFUSERS, PLENUM, CLAMP & GASKET, BOOTS, SADDLE REGISTERS AND CAULK AS REQUIRED BY DRAWINGS FOR UNDERGROUND INSTALLATION IN ACCORDANCE WITH THE MANUFACTURER'S INSTALLATION INSTRUCTIONS.
   - 1.5. DUCTWORK SHALL BE CLOSED CELL PLASTIC MATERIAL THAT IS RECYCLABLE, DOES NOT EMIT VOLATILE ORGANIC COMPOUNDS, AND CONFORMS TO ASTM-D2412. DUCTWORK SHALL BE RESISTANT TO MILDEW, MOLD (UL 181B), AND RADON GAS (BSS 7239-88). DUCTWORK SHALL NOT RUST OR CRACK UNDER EXTERNAL STRESS OR STRAIN. DUCTWORK SHALL HAVE R-10 EQUIVALENT THERMAL INSULATION VALUE WITHOUT THE USE OF EXTERNAL INSULATION.
   - 1.6. ALL JOINTS SHALL BE SEALED VIA GASKET OR BOLTS AND SEALANT. CLAMPS AND GASKETS SHALL BE USED ON DUCTWORK WITHOUT FLANGES. CLAMPS SHALL BE POLYETHYLENE WITH STAINLESS STEEL PLATES AND STAINLESS STEEL SCREWS. GASKETS SHALL COMPRISE OF 1/4" THICK BUTYL RUBBER SEALANT TAPE THAT IS WATER AND UV RESISTANT AND SHALL NOT STAIN. GASKETS SHALL COMPLY WITH ASTM-E84 FOR FLAME AND SMOKE SPREAD.
   - 1.7. FLANGED JOINTS AND DUCT BRANCHES SHALL USE A CO-POLYMER ADHESIVE CAULKING SEALANT THAT IS WATER AND UV RESISTANT. FLANGES SHALL BE CONNECTED WITH STAINLESS STEEL BOLTS.
   - 1.8. ASSEMBLED DUCTWORK SHALL BE ABLE TO MAINTAIN PRESSURE WITH NO LEAKAGE.
   - 1.9. DUCT SYSTEM SHALL BE INSTALLED BY AN AQC INDUSTRIES TRAINED INSTALLER. SUBMIT INSTALLER QUALIFICATIONS WITH BLUE DUCT SUBMITTAL.
   - 1.10. DUCT SYSTEM PERFORMANCE SHALL EXCEED SMACNA'S LEAKAGE CLASS 3 REQUIREMENTS AT THE SYSTEM DESIGN STATIC PRESSURE.
   - 1.11. DUCT SYSTEM SHALL CARRY A 10-YEAR LIMITED WARRANTY.
   - 1.12. ALL TEES AND ELBOWS SHALL BE FACTORY FABRICATED, LOW PRESSURE LOSS FITTINGS WITH FLANGED, SADDLE, OR FACTORY BLUE DUCT CLAMP CONNECTIONS ONLY. STRAIGHT DUCT TAPS AND FIELD FABRICATED TEES AND ELBOWS ARE NOT ACCEPTABLE.
2. INSTALL IN ACCORDANCE WITH MANUFACTURER'S INSTALLATION INSTRUCTIONS AND RECOMMENDATIONS.
   - 2.1. COMPLETE INSTALLATION TRAINING PROVIDED BY AQC INDUSTRIES PRIOR TO INSTALLATION.
   - 2.2. EXCAVATE A TRENCH EVENLY AS PER THE BLUE DUCT INSTALLATION INSTRUCTIONS.
   - 2.3. BACKFILL MATERIAL MUST CONSIST OF PEA GRAVEL OR DRY SILICA SAND.
   - 2.4. PROVIDE THE SEALANT AND GASKET MATERIAL PROVIDED BY AQC INDUSTRIES.
   - 2.5. DUCT BURIED BELOW 48" OF THE BASE FLOOD ELEVATION SHALL BE SLOPED 1/8" PER FOOT TO ALLOW DRAINAGE TO A POINT PROVIDED WITH ACCESS. SEE DETAIL 10/M301 AND FOLLOW MANUFACTURERS INSTALLATION INSTRUCTIONS.
3. TESTING
   - 3.1. THE COMPLETE UNDERGROUND DUCT SYSTEM SHALL BE TESTED FOR LEAKAGE AFTER FINAL ASSEMBLY.
   - 3.2. FOLLOW SMACNA AIR DUCT LEAKAGE TEST STANDARD.
4. FINAL CLEANING: REMOVE DUST AND DEBRIS FROM DUCTWORK PRIOR TO OCCUPANCY.
5. PROVIDE COMPLETE SHOP DRAWING SUBMITTAL FOR REVIEW INCLUDING:
   - 5.1. DETAILED SHOP DRAWINGS WITH ALL FITTINGS AND DIMENSIONS SHOWN.
   - 5.2. PRODUCT AND PERFORMANCE DATA FOR DUCT AND SEALANTS.
   - 5.3. INSTRUCTIONS FOR SEALING AND BACKFILLING.
   - 5.4. CONTRACTOR QUALIFICATIONS FOR INSTALLING BLUE DUCT.

UNIT HEATER (INFRARED ELECTRIC)

*PROVIDE SCHEDULED OR APPROVED EQUAL EQUIPMENT BY OTHER MANUFACTURERS

SYMBOL	AMP	POWER WATT	V/PH/HZ	OVERALL DIMENSIONS L x W x H IN.	WEIGHT (LBS.)	SERVICE	NOTES
UH-1	36	7500	208/3/60	33 x 21.5 x 10.5	50	INSPECTION BLDG	1- 4
UH-2	36	7500	208/3/60	33 x 21.5 x 10.5	50	INSPECTION BLDG	1- 4
UH-3	36	7500	208/3/60	33 x 21.5 x 10.5	50	INSPECTION BLDG	1- 4
UH-4	36	7500	208/3/60	33 x 21.5 x 10.5	50	INSPECTION BLDG	1- 4
UH-5	36	7500	208/3/60	33 x 21.5 x 10.5	50	INSPECTION BLDG	1- 4
UH-6	36	7500	208/3/60	33 x 21.5 x 10.5	50	INSPECTION BLDG	1- 4
UH-7	36	7500	208/3/60	33 x 21.5 x 10.5	50	INSPECTION BLDG	1- 4
UH-8	36	7500	208/3/60	33 x 21.5 x 10.5	50	INSPECTION BLDG	1- 4

NOTES:
1. PROVIDE AND INSTALL UNIT IN ACCORDANCE WITH MANUFACTURER'S INSTRUCTIONS AND DETAILS ON PLANS.
2. PROVIDE OVERHEAD ELECTRICAL INFRARED HEATER UNIT, 3-LAMP, 20 GAUGE STAINLESS STEEL HOUSING. HOUSING SHALL BE UL LISTED FOR BOTH INDOOR AND TOTALLY EXPOSED OUTDOOR APPLICATION. CLEAR QUARTZ LAMPS, GOLD ANODIZED ALUMINUM REFLECTORS AND ENDS FOR REFLECTIVENESS SET AT 45° DEGREE ASYMMETRIC REFLECTOR PATTERN. PROVIDE FACTORY PRE-WIRED CONTACTOR PANEL WITH STEP DOWN TRANSFORMER AND THREE (3) STAGE WIRING FOR EITHER ONE OR THREE LAMPS IN HEATER DEPENDING ON THE SIGNAL FROM A BUILT-IN 3-STAGE T-STAT.
3. PROVIDE LOCAL ON/OFF SWITCH FOR LOCAL CONTROL. SEE ELECTRICAL PLANS.
4. MANUFACTURER: FOSTORIA, INFRATUBE HEATERS, OR HEAT REX.

PACKAGED AIR CONDITIONER W/ ELECTRIC HEAT SCHEDULE

*PROVIDE SCHEDULED OR APPROVED EQUAL EQUIPMENT BY OTHER MANUFACTURERS

MARK	NOM. TONS	SUPPLY CFM	ESP	ELECTRICAL DATA			COOLING			HEATING		WT (LBS.)	MAX HEIGHT (IN)	NOTES
				VOLTS/PHASE	MCA	MOCP	EER	TOTAL	SENSIBLE	KW	TOTAL CAP (MBH)			
1	4	1,600	0.5	208 / 3 PH	27	40	12.0	46.3	35.4	7.9	26.9	700	48	1-19

NOTES:
1. PROVIDE AND INSTALL UNIT IN ACCORDANCE WITH MANUFACTURER'S INSTRUCTIONS AND DETAILS ON PLANS.
2. GROSS COOLING CAPACITY IS BASED ON 80°F EDB / 67°F EWB, 107°F AMBIENT. GROSS HEATING CAPACITY BASED ON 70°F EDB, 19°F AMBIENT. 3,650 FT ELEVATION. CAPACITIES LISTED WITH AN * ARE BASED ON ARI CONDITIONS.
3. COOLING CAPACITY, HEATING CAPACITY, CFM AT ESP AND SEER ARE MINIMUM CAPACITIES REQUIRED. UNIT SHALL HAVE NO LESS THAN THESE CAPACITIES.
4. MCA, MOCP AND WEIGHT ARE MAXIMUM CAPACITIES ALLOWED.
5. EXTERNAL STATIC PRESSURE SHALL INCLUDE DUCT AND DUCT-MOUNTED COMPONENTS SHOWN ON DRAWINGS ONLY. VENDOR SHALL CALCULATE INTERNAL STATIC PRESSURES FOR SUCH ACCESSORIES AS FILTERS (MERV 8 MID LIFE), DAMPERS, COILS, HEATERS, DISCHARGE ORIENTATION, PLENUMS, ETC.
6. PACKAGE UNIT SHALL BE INTERNALLY ISOLATED FROM THE FACTORY.
7. PROVIDE UNIT WITH R454B REFRIGERANT.
8. PROVIDE SINGLE POINT POWER CONNECTION TO UNIT. DISCONNECTS BY ELECTRICAL, SEE ELECTRICAL PLANS.
9. PROVIDE WITH HAIL/COIL GUARDS.
10. PROVIDE WITH HINGED SERVICE ACCESS TO UNIT.
11. PROVIDE WITH CRANKCASE HEATER AND FROSTAT.
12. PROVIDE WITH STAINLESS STEEL DRAIN PAN.
13. PROVIDE WITH CONDENSATE OVERFLOW SWITCH.
14. PROVIDE 5-YEAR COMPRESSOR WARRANTY.
15. PROVIDE UNIT WITH TWO SETS OF 2" DISPOSABLE PLEATED MERV 8 FILTERS WITH FILTER RACK SIZED FOR MAXIMUM 500 FPM VELOCITY. ONE SET USED DURING CONSTRUCTION AND FINAL SET USED PRIOR TO TEST AND BALANCE AND OCCUPANCY.
16. PACKAGE UNIT TO BE INSTALLED ON A CONCRETE HOUSEKEEPING PAD, ANCHOR UNIT WITH HIGH WIND HOLD DOWN BRACKETS (4) PLACES. INSTALL UNIT LEVEL.
17. PROVIDE WITH ALL CONTROLS, SEE CONTROL REQUIREMENTS AND SEQUENCE OF OPERATIONS.
18. PROVIDE WITH TWO-POSITION MOTORIZED DAMPERS FOR OUTSIDE AIR CONTROL. SEE OUTSIDE AIR SCHEDULE FOR UNIT OUTSIDE AIR REQUIREMENT AND BALANCE TO DESIGN CFM AS INDICATED.
19. MANUFACTURER: TRANE (BASIS OF DESIGN), CARRIER, DAIKIN.

EVAPORATIVE COOLER SCHEDULE

*PROVIDE SCHEDULED OR APPROVED EQUAL EQUIPMENT BY OTHER MANUFACTURERS

SYMBOL	FAN		PUMP					ELECTRICAL DATA			OPERATING WEIGHT	OVERALL DIMENSIONS L x W x H IN.	SERVICE	NOTES
	OPER. CFM	SP (IN.WG.)	GPH	HEAD (FT)	BLEED GPH	PAD AREA (SQ. IN.)	AMPS AT 115/1PH	V/PH/HZ	FAN HP	AMPS				
EC-1	8,500	0.6	300	5	10	14.2	1.7	208/3/60	3	8.6	750	70 x 49 x 52	INSPECTION BLDG	1- 18
EC-2	8,500	0.6	300	5	10	14.2	1.7	208/3/60	3	8.6	750	70 x 49 x 52	INSPECTION BLDG	1- 18
EC-3	8,500	0.6	300	5	10	14.2	1.7	208/3/60	3	8.6	750	70 x 49 x 52	INSPECTION BLDG	1- 18

NOTES:
1. PROVIDE AND INSTALL UNIT IN ACCORDANCE WITH MANUFACTURER'S INSTRUCTIONS AND DETAILS ON PLANS.
2. MAXIMUM OPERATING WEIGHT LISTED IN SCHEDULE ABOVE INCLUDES OPERATING UNIT WEIGHT. MAXIMUM OPERATING WEIGHT SHALL NOT BE EXCEEDED.
3. PROVIDE UNIT FOR OPERATION AT 3,650 FT ELEVATION.
4. PROVIDE UNIT WITH HOT-DIPPED GALVANIZED STEEL, WITH POLYBOND FINISH.
5. PROVIDE UNIT WITH HINGED SERVICE ACCESS.
6. PROVIDE WITH 12" MEDIA DEPTH, 90% EFFICIENT EVAPORATIVE CROSS FLUTED MEDIA (UL900).
7. PROVIDE UNIT FOR OUTDOOR INSTALLATION ON ROOF.
8. PROVIDE UNIT WITH SINGLE INLET AND SIDE DISCHARGE SEE PLAN FOR ORIENTATION.
9. PROVIDE 14" ROOF CURB AND SUPPORTS. ROOF CURB SHALL BE PITCHED TO MATCH AS BUILT ROOF SLOPE.
10. MOTOR SHALL BE NEMA PREMIUM EFFICIENCY WITH 1.15 S.F. AND SUITABLE FOR HIGH MOISTURE OPERATION.
11. CENTRIFUGAL FAN SHALL BE BELT-DRIVEN. PROVIDE WITH ADJUSTABLE MOTOR SHEAVE.
12. PROVIDE WITH FUSED DISCONNECT.
13. SUMP SHALL BE CONSTRUCTED OF STEEL, COATED WITH CORROSION RESISTANT FINISH AND LEAK-PROOF.
14. PROVIDE COPPER WATER OVERFLOW PIPING WITH CLEANOUTS.
15. PROVIDE COMPLETE WITH FLOAT VALVE FOR WATER MAKE-UP, SUMP PUMP, AND A PROGRAMMABLE DRAIN PUMP TO AUTOMATICALLY FLUSH OUT OLD WATER IN PAN EVERY 6 TO 8 HOURS AS RECOMMENDED BY THE MANUFACTURER. PUMPS SHALL BE SUBMERSIBLE CORROSION PROOF TYPE.
16. PROVIDE 115V FOR PUMP OPERATION AND PROVIDE WITH SWITCH.
17. CABINET AND SUMP SHALL BE GUARANTEED FOR 5 YEARS AGAINST RUST. PROVIDE AMCA CERTIFIED UNITS. UNITS SHALL SEE CONTROL REQUIREMENTS AND SEQUENCE OF OPERATIONS FOR UNIT CONTROL.
18. MANUFACTURER: PHOENIX MANUFACTURING INC/PMI (IS500), OR EQUAL BY MASTERCOOL.

IN LINE PIT EXHAUST FAN SCHEDULE

*PROVIDE SCHEDULED OR APPROVED EQUAL EQUIPMENT BY OTHER MANUFACTURERS

SYMBOL	CFM	EXT. S.P. (IN. WC)	DRIVE TYPE	FAN RPM	TIP SPEED FPM	BHP	MOTOR HP	V/PH	MCA	MOP	MAX RADIATED SOUND LwA / dBA / SONES	OPERATING WEIGHT (LBS.)	LOCATION	NOTES
EF-1	2,700	0.75	DIRECT	1,251	6,418	0.65	2	208/3	9.38	20	67/55/6.2	170	INSPECTION BLDG	1-8
EF-2	2,700	0.75	DIRECT	1,251	6,418	0.65	2	208/3	9.38	20	67/55/6.2	170	INSPECTION BLDG	1-8

NOTES:
1. PROVIDE AND INSTALL UNIT IN ACCORDANCE WITH MANUFACTURER'S INSTRUCTIONS AND DETAILS ON PLANS.
2. PROVIDE UNIT FOR OPERATION AT 3,650 FT ELEVATION.
3. WEIGHTS AND SOUND PERFORMANCE DATA INDICATED ARE MAXIMUM.
4. PROVIDE INSULATED (1" MIN) ALUMINUM HOUSING, BACKWARD INCLINED ALUMINUM WHEEL.
5. PROVIDE DIRECT DRIVE FAN, SPARK B RATED. WITH NEMA PREMIUM EFFICIENCY EXPLOSION PROOF (EXP) MOTOR WITH CLASS F (OR SUPERIOR) INSULATION, THERAL OVERLOAD. PROVIDE WITH VFD, ABB MODEL ACH-580 WITH NEMA 12 ENCLOSURE (OR EQUAL). VFD SHALL BE DE-RATED FOR 114°F. LOCATE VFD ADJACENT TO EXHAUST FAN. COORDINATE FINAL VFD LOCATION WITH EC AND OTHER TRADES TO AVOID CONFLICTS. SPEED SETTING SHALL BE DETERMINED BY THE TAB CONTRACTOR.
6. PROVIDE WITH INTEGRAL DUCT CONNECTION FLANGES. PROVIDE WITH 1" THICK INSULATED HOUSING. PROVIDE FLEX CONNECTIONS AT BOTH INLET AND OUTLET AND STRAIGHT SECTIONS OF DUCT AT INLET AND OUTLET PER DETAIL 3/M300.
7. PROVIDE WITH SPRING VIBRATION ISOLATORS BY EQUIPMENT MANUFACTURER.
8. MANUFACTURER: GREENHECK (SQ-160), TWIN CITY FAN, OR LOREN COOK.

ROOF MOUNTED UPBLAST EXHAUST FAN SCHEDULE

*PROVIDE SCHEDULED OR APPROVED EQUAL EQUIPMENT BY OTHER MANUFACTURERS

SYMBOL	CFM	EXT. S.P. (IN. WC)	DRIVE TYPE	FAN RPM	TIP SPEED FPM	BHP	MOTOR HP	V/PH	MCA	MOP	MAX INLET SOUND LwA / dBA / SONES	OPERATING WEIGHT (LBS.)	NOTES
EF- 3	6,400	0.75	DIRECT	901	5,779	1.68	5	208/3	10.0	20	70 / 59 / 9.4	250	1-9
EF- 4	6,400	0.75	DIRECT	901	5,779	1.68	5	208/3	10.0	20	70 / 59 / 9.4	250	1-9

NOTES:
1. PROVIDE AND INSTALL UNIT IN ACCORDANCE WITH MANUFACTURER'S INSTRUCTIONS AND DETAILS ON PLANS.
2. PROVIDE UNIT FOR OPERATION AT 3,650 FT ELEVATION.
3. WEIGHTS AND SOUND PERFORMANCE DATA INDICATED ARE MAXIMUM.
4. PROVIDE DIRECT DRIVE UPBLAST ROOF EXHAUST FAN: INCLUDE NEMA PREMIUM EFFICIENCY MOTOR WITH SHAFT GROUNDING AND CLASS F OR SUPERIOR INSULATION FOR VFD SERVICE. FAN SHALL HAVE ALUMINUM HOUSING, BACKWARD INCLINED ALUMINUM WHEEL, CURB CAP WITH PRE-PUNCHED MOUNTING HOLES, MOTOR AND DRIVE ON SHOCK MOUNTS.
5. PROVIDE WITH VFD, ABB MODEL ACH-580 WITH NEMA 12 ENCLOSURE (OR EQUAL). VFD SHALL BE DE-RATED FOR 114°F. LOCATE VFD ON WALL WHERE SHON ON FLOOR PLAN. COORDINATE FINAL VFD LOCATION WITH EC AND OTHER TRADES TO AVOID CONFLICTS. SPEED SETTING SHALL BE DETERMINED BY THE TAB CONTRACTOR.
6. PROVIDE 14" HIGH ROOF CURB WITH 1" THICK INSULATION. CURB SHALL BE PITCHED TO MATCH THE AS-BUILT ROOF SLOPE . PROVIDE WITH FULL PERIMETER CURB SEAL AND STAINLESS STEEL FASTENERS. PROVIDE ALL FLASHING AND COUNTER-FLASHING COMPLETE.
7. PROVIDE FLEX CONNECTION AT FAN OUTLET WITH PROTECTIVE WEATHER COVER PER DETAILS ON PLANS.
8. PROVIDE WITH COUNTERBALANCED BACKDRAFT DAMPER THAT WILL OPERATE IN THE RANGE 0.05" W.G. (START OPEN) TO 0.1" W.G. (FULL OPEN). SEE CONTROL REQUIREMENTS AND SEQUENCE OF OPERATIONS FOR UNIT CONTROL.
9. MANUFACTURER: GREENHECK (CUE-300-VGD), TWIN CITY FAN, OR LOREN COOK. DAMPER MANUFACTURER: GREENHECK, RUSKIN, OR EQUAL.

ROOF VENT SCHEDULE

*PROVIDE SCHEDULED OR APPROVED EQUAL EQUIPMENT BY OTHER MANUFACTURERS

SYMBOL	CFM	EXT SP (IN. W.G.)	AIR DIRECTION	THROAT AREA	THROAT SIZE	BACKDRAFT DAMPER	HOOD SIZE W x D x H IN.	SERVICE / LOCATION	MAX WEIGHT (LBS.)	NOTES
RV-1	4,500	0.03	EXHAUST	10.0	36x40	WITHOUT	63 x 52 x 31	INSPECTION BLDG	250	1- 3
RV-2	4,500	0.03	EXHAUST	10.0	36x40	WITHOUT	63 x 52 x 31	INSPECTION BLDG	250	1- 3

NOTES:
1. FURNISH AND INSTALL A ROOF MOUNTED GRAVITY RELIEF VENTILATOR AS SHOWN ON THE DRAWINGS.
2. HOUSING SHALL BE HEAVY GAUGE GALVANIZED STEEL CONSTRUCTION. HOOD TOP SHALL BE SLOPED FOR DRAINAGE. FURNISH WITH BIRDSCREEN, AND ROOF CURB. SEE PLAN FOR THROAT SIZES. PROVIDE RV-1 AND RV-2 WITH A HINGED HOOD.
3. MANUFACTURER: GREENHECK (FGR-36x40), CARNES, JENN AIR, ACME OR EQUIVALENT

APPLIED ENGINEERING
2800 S. RURAL RD. SUITE 101
TEMPE, AZ 85282 (480)968 3070
JOB NUMBER 25-041

Professional Engineer Certificate No. 29717 GREGORY PIRAINO Date Signed 06-30-26 Expires 12/31/2028

Issue Date:	10 JULY 2026	
Revisions:	# Description	Date

gabor lorant architects
3326 n. 3rd avenue suite 200
phoenix, arizona 85013
tel: 602.667.9090
fax: 602.667.9133
gaborlorant.com
gla Project No.: 24102

ARIZONA DEPARTMENT OF TRANSPORTATION
PROJECT DELIVERY AND OPERATIONS DIVISION
PROJECT MANAGEMENT GROUP

SAN SIMON PORT OF ENTRY
MECHANICAL SCHEDULES AND SPECIFICATIONS

ROUTE I-10
MILEPOST 383
STRUCTURE NO.

F.H.W.A Arizona Division	STATE	PROJECT NO.	FEDERAL ID NO.	SHEET NO.	TOTAL SHEETS	RECORD DRAWING
	ARIZ.	010 CH 383	010-F(238)T	147	200	

LOCATION: SAN SIMON PORT OF ENTRY (POE)

TRACS NO. F0728 01C

DWG NO. **M002**

___ OF ___

CONTROL SPECIFICATIONS AND SEQUENCE OF OPERATIONS

GENERAL WORK INCLUDED:
MECHANICAL CONTRACTOR SCOPE SHALL INCLUDE AN HVAC CONTROL SYSTEM COMPLETE PER MECHANICAL CONTROLS SPECIFICATION AND AS DESCRIBED HEREIN.

PROVIDE ALL LABOR, MATERIALS, EQUIPMENT, AND SERVICE NECESSARY FOR A COMPLETE AND OPERABLE HVAC CONTROL SYSTEM PER PLANS AND SEQUENCE OF OPERATIONS. CONTROL SYSTEM SHALL INCLUDE ALL CONTROLLERS, THERMOSTATS, HAND OFF AUTO SWITCHES, ALL TRANSFORMERS, BUS, RELAYS, PANELS, AND SENSOR WIRING (SHIELDED CABLES). MECHANICAL CONTRACTOR TO PROVIDE RIGID METAL CONDUIT AND J-BOXES FOR ALL CONTROL WIRING. ROUTE CONTROL WIRING RACKED WITH REFRIGERANT PIPING IN AN ORGANIZED MANOR. PROVIDE ALL DUCT TEMPERATURE AND FLOW SENSORS, CONNECTIONS, DAMPER ACTUATORS, PROGRAMMING, AND OPERATOR TRAINING FOR A COMPLETE AND FULLY OPERATIONAL SYSTEM.

SUBMITTAL PACKAGE SHALL INCLUDE THE FOLLOWING:
- PRODUCT DATA FOR ALL HARDWARE, HANGERS, CABLES, AND DEVICES
- CONTROL DIAGRAMS AND/OR DRAWINGS

SPLIT SYSTEM AIR CONDITIONER (IU/OU 1, 2, 2B, 2C, 3):

INDOOR UNIT CONTROL (IU) TO BE RELOCATED: RELOCATE EXISTING THERMOSTAT AND PROGRAM PER OWNER PREFERRED TEMPERATURES AND SCHEDULES.

COMMUNICATION CABLE:
ALL COMMUNICATION CABLE INSTALLED OUTDOORS, ON ROOF, TO ALL INDOOR UNITS (IU), AND TO CONTROL PANEL(S) SHALL BE INSTALLED IN RIGID METAL CONDUIT. INSTALL AND ROUTE CONDUIT IN RACK SYSTEM WITH REFRIGERANT LINES.

INSPECTION BLDG EVAPORATIVE COOLING UNIT CONTROL (EC 1-3):
PROVIDE A HAND OFF AUTO CONTROL SWITCH FOR EACH EVAPORATIVE COOLER AND LOCAL PUMP ON/OF. INTERLOCK EACH EVAPORATIVE COOLER TO THE INSPECTION BLDG LIGHTING CONTROL SYSTEM SUCH THAT WHEN THE EVAPORATIVE COOLER CONTROL SWITCH IS SET TO "AUTO" IT WILL OPERATE ONLY WHEN THE INSPECTION BLDG LIGHTING CIRCUIT IS POWERED. REFER TO ELECTRICAL PLANS.

INSPECTION BLDG IN LINE PIT EXHAUST FAN CONTROL (EF 1-2):
PROVIDE A LOCAL HAND OFF AUTO CONTROL SWITCH FOR EACH EXHAUST FAN. INTERLOCK EACH EXHAUST FAN TO BOTH THE INSPECTION BLDG LIGHTING CONTROL SYSTEM, TO EACH HORIZONTAL COILING PIT COVER SUCH THAT WHEN THE EXHAUST FAN CONTROL SWITCH IS SET TO "AUTO" IT WILL OPERATE WHEN EITHER THE INSPECTION BLDG LIGHTING CIRCUIT IS POWERED OR THE HORIZONTAL COILING DOOR IS AT LEAST PARTIALLY OPEN. PROVIDE A LIMIT SWITCH ON EACH HORIZONTAL COILING PIT COVER AND INTERLOCK THEM TO THE EXHAUST FANS. ALSO INTERLOCK TO THE GAS DETECTION SYSTEM. UPON DETECTION OF CO/NO2, FANS SHALL OPERATE UNTIL LEVELS ARE BELOW THE DETECTION THRESHOLD AS RECOMMENDED BY THE GAS DETECTION SYSTEM MANUFACTURER. REFER TO ELECTRICAL PLANS.

INSPECTION BLDG ROOF TOP EXHAUST FAN CONTROL (EF 3-4):
PROVIDE A LOCAL HAND OFF AUTO CONTROL SWITCH FOR EACH EXHAUST FAN. INTERLOCK EACH EXHAUST FAN TO THE INSPECTION BLDG LIGHTING CONTROL SYSTEM SUCH THAT WHEN THE EXHAUST FAN CONTROL SWITCH IS SET TO "AUTO" IT WILL OPERATE ONLY WHEN THE INSPECTION BLDG LIGHTING CIRCUIT IS POWERED. REFER TO ELECTRICAL PLANS. ALSO INTERLOCK TO THE GAS DETECTION SYSTEM. UPON DETECTION OF CO/NO2, FANS SHALL OPERATE UNTIL LEVELS ARE BELOW THE DETECTION THRESHOLD AS RECOMMENDED BY THE GAS DETECTION SYSTEM MANUFACTURER. REFER TO ELECTRICAL PLANS.

INSPECTION BLDG INFRARED HEATER CONTROL (UH 1-8):
PROVIDE HEATERS WITH A FACTORY PRE-WIRED CONTACTOR PANEL WITH STEP DOWN TRANSFORMER AND THREE (3) STAGE WIRING FOR EITHER ONE OR THREE LAMPS IN HEATER MODE DEPENDING ON THE SIGNAL FROM A BUILT-IN 3-STAGE T-STAT. PROVIDE A LOCAL ON/OFF SWITCH UNDER AND NEAR EACH HEATER FOR LOCAL OPERATOR ON/OFF CONTROL. REFER TO ELECTRICAL PLANS.

INSPECTION BLDG GAS DETECTION SYSTEM CONTROL (GD 1-6):
PROVIDE SELF CONTAINED GAS DETECTORS/CONTROLLERS WITH BUILT IN LED DISPLAY THAT SHOWS PPM OF GAS DETECTED, WITH PROGRAMMABLE ALARM SETPOINTS. CONNECT PLUG AND PLAY REMOTE STROBE/HORN TO SELF CONTAINED DETECTOR/CONTROLLER FOR THE INSPECTION BLDG AND SET ALARM SET POINTS TO LOW ALARM AT 25 PPM CO DETECTED, AND OR 0.7 PPM OF N02 GAS DETECTED. SET HIGH ALARM SETPOINTS FOR INSPECTION BUILDING TO 100 PPM OF CO GAS DETECTED AND 1.50 PPM OF N02 GAS DETECTED. FOR THE INSPECTION PIT SET ALARM SET POINTS TO LOW ALARM AT 25 PPM CO DETECTED, AND OR 0.7 PPM OF N02 GAS DETECTED. SET HIGH ALARM SETPOINTS FOR INSPECTION PIT TO 100 PPM OF CO GAS DETECTED AND 1.50 PPM OF N02 GAS DETECTED. REMOTE STROBE AND HORN SHOULD ALARM ON HIGH GAS DETECTION. REFER TO ELECTRICAL PLANS. INTERLOCK TO EF-1, 2, 3, & 4. AT LOW ALARM THRESHOLD, ALL EF'S SHALL OPERATE UNTIL LEVELS ARE BELOW THE DETECTION THRESHOLD RECOMMENDED BY THE MANUFACTURER.

EXISTING DUCTLESS SPLIT SYSTEM HEAT PUMPS (TO BE RELOCATED AND REMAIN)

AIR HANDLING UNIT (INDOOR UNIT)				COOLING				HEATING		ELECTRICAL SINGLE PT POWER TO OU			MAX WT (LBS.) INDOOR OUTDOOR	NOTES
MARK	AREA SERVED	MAKE	MODEL INDOOR UNIT OUTDOOR UNIT	NOMINAL TONS	SUPPLY CFM	TOT MBH	MIN. SEER	HEATING CAPACITY (MBH)	HSPF	VOLTS/ PHASE	MCA OUTDOOR	MOCP OUTDOOR		
1	MDF RM	LG	EXISTING IU TO BE RELOCATED EXISTING OU TO BE RELOCATED	1	400	12	17.0	12	9	208/230 1 PH	10	15	30 60	1-8
2A	OFFICE	MITSUBISHI	EXISTING INDOOR UNIT TO REMAIN IN PLACE AT EXISTING LOCATION							EXISTING OUTDOOR UNIT TO REMAIN IN PLACE AT EXISTING LOCATION			30 EXISTING	1-8
2B	OFFICE	MITSUBISHI	EXISTING INDOOR UNIT TO BE RELOCATED							EXISTING OUTDOOR UNIT TO REMAIN IN PLACE AT EXISTING LOCATION			30 EXISTING	1-8
2C	HALLWAY	MITSUBISHI	EXISTING INDOOR UNIT TO BE RELOCATED							EXISTING OUTDOOR UNIT TO REMAIN IN PLACE AT EXISTING LOCATION			30 EXISTING	1-8
3	BREAKROOM	MITSUBISHI	EXISTING INDOOR UNIT TO REMAIN IN PLACE AT EXISTING LOCATION							EXISTING OUTDOOR UNIT TO REMAIN IN PLACE AT EXISTING LOCATION			30 EXISTING	1-8

NOTES
1. INSTALL IN STRICT ACCORDANCE WITH MANUFACTURERS INSTRUCTIONS AND DETAILS ON PLANS. SEE MANUFACTURER'S DOCUMENTATION FOR MAXIMUM LENGTH OF REFRIGERANT LINES AND APPROPRIATE SIZING. PROVIDE LONG LINE EXTENSION KIT IF REQUIRED. PROVIDE INSTALLATION INSTRUCTIONS TO THE ELECTRICAL CONTRACTOR AND PRE-COORDINATE INSTALLATION.
2. PROVIDE NEW REFRIGERANT LINES FROM THE OU TO RELOCATED IU.
3. PROVIDE UNIT WITH REPLACEMENT FILTERS.
4. INSTALL OU UNITS ON A 4" HIGH EQUIPMENT CURB.
5. RELOCATE UNIT AND EXISTING T CONTROL/THERMOSTAT.
6. ALL CONTROL WIRING SHALL BE INSTALLED IN RIGID METAL CONDUIT. EXPOSED CONTROL WIRING IS PERMITTED ABOVE CEILING ONLY WHEN SUPPORTED WITH APPROVED HANGERS. MC TO INSTALL THE INTERCONNECT CABLE BETWEEN THE INDOOR AND OUTDOOR UNITS.
7. PROVIDE NEW ACR LINE SETS WITH LONG RADIUS BENDS AND ELBOWS, AND INSTALL WITHOUT DIPS OR SAGS. BOTH THE LIQUID AND SUCTION LINES SHALL BE INSULATED. LINE-SET INSULATION ON ROOF AND AT EXTERIOR LOCATIONS SHALL BE WRAPPED IN AN ALUMINUM JACKET PER DETAILS ON PLANS.
8. SEE CONTROL SPECIFICATIONS.

INSPECTION BUILDING PIT LEVEL CO, & NO2 GAS DETECTION SYSTEM

*PROVIDE SCHEDULED OR APPROVED EQUAL EQUIPMENT BY OTHER MANUFACTURERS

MARK	MANUFACTURER	TYPE	SERVICE	NOTES
1-4	UL 2075 LISTED DEVICE	SELF CONTAINED CONTROLLER	INSPECTION PIT, CO, & NO2 GAS DETECTOR	1-10
5-6	UL 2075 LISTED DEVICE	SELF CONTAINED CONTROLLER	INSPECTION BLDG, CO, & NO2 GAS DETECTOR	1-6, 8-11

NOTES:
1. INSTALL UNIT PER MANUFACTURER'S WRITTEN INSTALLATION INSTRUCTIONS AND RECOMMENDATIONS.
2. ALL CONTROLLERS SHALL BE LISTED IN ACCORDANCE WITH UL 2075 FOR A FULLY COMPLIANT UL 2075 SYSTEM PER 2018 IMC SECTION 404.1 REQUIREMENTS.
3. SUBMIT WITH A PROJECT SPECIFIC WIRING DIAGRAM WITH ALL DEVICES AND MODEL NUMBERS LISTED, GENERIC SUBMITTALS WILL BE REJECTED.
4. PROVIDE SELF CONTAINED CONTROLLER WITH BUILT IN LED DISPLAY THAT SHOWS PPM OF GAS DETECTED, WITH PROGRAMMABLE ALARM SETPOINTS. CAPABLE OF DETECTING CARBON MONOXIDE (GASOLINE ENGINE EXHAUST) AND NITROGEN DIOXIDE (DIESEL EXHAUST).
5. EACH CONTROLLER SHALL HAVE AN INTEGRAL ELECTROCHEMICAL CARBON MONOXIDE SENSOR WITH DETECTION RANGE OF 0-200 PPM AND CONFIGURED ALARM SETPOINTS OF 25 PPM LOW ALARM AND 100 PPM HIGH.
5. EACH CONTROLLER SHALL HAVE AN INTEGRAL ELECTROCHEMICAL NITROGEN DIOXIDE SENSOR WITH DETECTION RANGE OF 0-10 PPM AND CONFIGURED ALARM SETPOINTS OF 0.7 PPM LOW ALARM AND 1.50 PPM HIGH.
6. PROVIDE WITH A LOCAL AUDIBLE AND VISUAL ALARMS AND LOCATE SO THEY ARE VISIBLE TO OCCUPANTS, PROVIDE LOCAL SIGNAGE, AND CONFIGURE TO ALARM ON HIGH CO, AND OR NO2 LEVELS.
7. INTERLOCK SYSTEM TO INSPECTION PIT EXHAUST FANS EF-1-2, TO PROVIDE INSPECTION PIT EXHAUST UPON POSITIVE DETECTION OF CO, AND NO2. SEE CONTROL SPECIFICATIONS AND SEQUENCE OF OPERATIONS.
8. PROVIDE WITH ALL LOW VOLTAGE TRANSFORMERS, SEE ELECTRICAL PLANS FOR POWER.
9. PROVIDE SYSTEM START-UP AND OPERATOR TRAINING BY A FACTORY TECHNICIAN.
10. MANUFACTURER: CRITICAL ENVIRONMENT TECHNOLOGIES (SELF CONTAINED CONTROLLER).
11. PROVIDE A REMOTE HORN/STROBE.

HIGH PERFORMANCE DRAINABLE BLADE LOUVER

*PROVIDE SCHEDULED OR APPROVED EQUAL EQUIPMENT BY OTHER MANUFACTURERS

SYMBOL	AIRFLOW (CFM)	MAX S.P. (IN.WG.)	WIDTH (IN)	HEIGHT (IN)	FREE AREA (SQ.FT.)	FACE VELOCITY (FPM)	AIR DIRECTION	LOCATION	NOTES
LV-1	2,700	0.015	24	84	6.98	390	EXHAUST	INSPECTION BLDG	1-5
LV-2	2,700	0.015	24	84	6.98	390	EXHAUST	INSPECTION BLDG	1-5

NOTES:
1. INSTALL IN ACCORDANCE WITH MANUFACTURERS INSTRUCTIONS.
2. PROVIDE HEAVY GAUGE EXTRUDED ALUMINUM WITH CLEAR ANODIZED ALUMINUM FACTORY FINISH, DRAINABLE BLADE DESIGN, BLADES POSITIONED AT 37-1/2 DEGREE ANGLES ON APPROXIMATELY 6" CENTERS.
3. PROVIDE WITH BIRD SCREEN INTERNALLY MOUNTED.
4. PROVIDE MOUNTING ANGLES, SLEEVES, AND ALL MOUNTING HARDWARE COMPLETE.
5. MANUFACTURER: GREENHECK, RUSKIN, OR POTTORFF.

GRILLES REGISTERS AND DIFFUSERS SCHEDULE

DEVICE ID	DEVICE SPECIFICATION
A	CEILING SUPPLY DIFFUSER, SYMBOL A: STAMPED FACE, FOR LAY-IN TYPE CEILING, ROUND NECK WITH ADJUSTABLE TABS, FIXED LOUVERS, REMOVABLE CORE, QUADRANT LOCKING VOLUME DAMPER IN DUCT PER PLANS, BAKED WHITE ENAMEL FINISH.
B	CEILING SUPPLY DIFFUSER, SYMBOLS B: ALUMINUM CONSTRUCTION, HARD LID CEILING, SQUARE NECK WITH ADJUSTABLE TABS, FIXED LOUVERS, REMOVABLE & MODULAR CORE, VOLUME REGULATOR, BAKED WHITE ENAMEL FINISH.

SYMBOLS A AND B SIZING

SYMBOL A: ROUND NECK

CFM RANGE	FACE DIMENSIONS (INCH)	NECK DIMENSIONS (INCH)	T.P. (IN. W.G.)	MAXIMUM NC
91 - 130	24" x 24"	6" DIA.	.02-.06	24
131 - 210	24" x 24"	8" DIA.	.02-.06	28
211 - 320	24" x 24"	10" DIA.	.03-.06	30
321 - 420	24" x 24"	12" DIA.	.03-.06	30
421 - 530	24" x 24"	14" DIA.	.04-.06	30
531 - 630	24" x 24"	15" DIA.	.03-.06	30

SYMBOL B: SQUARE NECK

CFM RANGE	NECK DIMENSIONS (INCH)	T.P. (IN. W.G.)	MAXIMUM NC
0 - 130	6" x 6"	.006-.06	25
133 - 350	8" x 8"	.013-.093	25
208 - 475	10" x 10"	.02-.08	25
300 - 600	12" x 12"	.02-.08	25
408 - 750	14" x 14"	.02-.08	25
533 - 850	16" x 16"	.03-.08	25

C	RETURN OR TRANSFER GRILLE, SYMBOL C: SURFACE MOUNT LOUVERED RETURN GRILLE, ALUMINUM CONSTRUCTION WITH 1-1/4 " BORDER FOR SURFACE MOUNTING, 3/4" FIXED BLADE SPACING, AND 35° DEFLECTION LONG BLADES. SIZED AS SHOWN ON THE DRAWINGS.
D	RETURN OR TRANSFER GRILLE, SYMBOL D: LAY-IN LOUVERED RETURN GRILLE, ALUMINUM CONSTRUCTION WITH LAY-IN BORDER, 3/4" FIXED BLADE SPACING, AND 35° DEFLECTION LONG BLADES. SIZED AS SHOWN ON THE DRAWINGS.

SYMBOL C & D SIZING

EXHAUST/RETURN/TRANSFER GRILLES (SURFACE)

CFM RANGE	FACE DIMENSIONS (INCH)	NECK DIMENSIONS (INCH)	T.P. (IN. W.G.)	MAXIMUM NC
20 - 285	10" x 8"	SEE PLANS	.01-.08	25
286 - 600	12" x 12"	SEE PLANS	.01-.08	25
601 - 1300	24" x 24"	SEE PLANS	.01-.07	30

SYMBOL D: RETURN/TRANSFER GRILLES (LAY-IN)

CFM RANGE	FACE DIMENSIONS (INCH)	NECK DIMENSIONS (INCH)	T.P. (IN. W.G.)	MAXIMUM NC
0 - 1,884	24" x 24"	22" x 22"	.001-.073	25

F	EXHAUST GRILLE, SYMBOL F: ALUMINUM CONSTRUCTION WITH HORIZONTAL, 35° FIXED DEFLECTION BLADES, 1/ 2" BLADES SPACING, WITH OPPOSED BLADE DAMPER, 1-1/4" BORDER FOR SURFACE MOUNTING ON WALL. SEE PLANS FOR SIZE.
G	SUPPLY TURBO NOZZLE, SYMBOL G: ALUMINUM CONSTRUCTION, INDIVIDUALLY ADJUSTABLE AIR DIRECTION, WITH SURFACE MOUNT FRAME, CLEAR ANODIZED FINISH. SEE DETAIL 1/M300. PROVIDE ALL MOUNTING HARDWARE. SIZED AS SHOWN ON THE DRAWINGS. MAX 25 NC.
H	SUPPLY GRILLE, SYMBOL H: ALUMINUM CONSTRUCTION WITH DOUBLE DEFLECTION BLADES, FRONT BLADES PARALLEL WITH THE SHORT DIMENSION, 3/4" BLADES SPACING, WITH OPPOSED BLADE DAMPER, 1-1/4" BORDER FOR SURFACE MOUNTING ON WALL. SEE PLANS FOR SIZE.
FD	FIRE DAMPER: PROVIDE UL LISTED 1-1/2 HOUR RATED FIRE DAMPER THAT MEETS THE MOST CURRENT VERSION OF THE UL 555 FIRE DAMPER TEST STANDARD. FIRE DAMPERS SHALL BE LISTED AND LABELED FOR USE IN DYNAMIC SYSTEMS. FIRE DAMPERS SHALL BE CURTAIN TYPE DESIGNED FOR BLADES OUT OF THE AIR STREAM AND BE RATED UP TO 4" W.G. AND 2,000 FPM AIR VELOCITY, WITH A 165°F FUSIBLE LINK. PROVIDE ALL SLEEVES, MOUNTING HARDWARE, RETAINING ANGLES, AND INSTALL IN STRICT ACCORDANCE WITH MANUFACTURERS INSTALLATION INSTRUCTIONS. MANUFACTURER: GREENHECK, RUSKIN, OR EQUAL.

EXHAUST HOOD SCHEDULE

*PROVIDE SCHEDULED OR APPROVED EQUAL EQUIPMENT BY OTHER MANUFACTURERS

SYMBOL	CFM	HOOD SIZE W x D	SERVICE / LOCATION	NOTES
3	6,400	10 FT X 8 FT	INSPECTION BLDG	1- 2
4	6,400	10 FT X 8 FT	INSPECTION BLDG	1- 2

NOTES:
1. PROVIDE CUSTOM HEAVY GAUGE GALVANIZED STEEL EXHAUST HOOD PER DETAIL 4/M300.
2. PROVIDE ALL SUPPORTS AND MOUNTING HARDWARE COMPLETE.

APPLIED ENGINEERING
2800 S. RURAL RD. SUITE 101
TEMPE, AZ 85282 (480)968 3070
JOB NUMBER 25-041

Expires 12/31/2028

gla
gabor lorant architects
3326 n. 3rd avenue suite 200
phoenix, arizona 85013
tel: 602.667.9090
fax: 602.667.9133
gaborlorant.com
gla Project No.: 24102

Issue Date:	10 JULY 2026	
Revisions:	# Description	Date

ARIZONA DEPARTMENT OF TRANSPORTATION
PROJECT DELIVERY AND OPERATIONS DIVISION
PROJECT MANAGEMENT GROUP

SAN SIMON PORT OF ENTRY
MECHANICAL SCHEDULES
AND CONTROL SPECIFICATIONS

ROUTE I-10
MILEPOST 383
STRUCTURE NO.

F.H.W.A Arizona Division

STATE	PROJECT NO.	FEDERAL ID NO.	SHEET NO.	TOTAL SHEETS	RECORD DRAWING
ARIZ.	010 CH 383	010-F(238)T	148	200	

LOCATION SAN SIMON PORT OF ENTRY (POE)

TRACS NO. F0728 01C

DWG NO. **M003**

___ OF ___

MECHANICAL KEY NOTES:

1. EXISTING UNIT TO BE RELOCATED ON NEW DEMISING WALL, SEE ARCHITECTURAL DRAWINGS. PURGE REFRIGERANT AND SALVAGE FOR REUSE, DISCONNECT FROM OU IN ACCORDANCE WITH UNIT MANUFACTURER'S INSTRUCTIONS. REMOVE REFRIGERANT LINES IN VICINITY OF INDOOR UNIT, CAP AND PROTECT FOR REUSE. CONDENSATE DRAINS SHALL BE REMOVED AND REPLACED. REMOVE AND PROTECT PLASTIC REFRIGERANT LINE COVERS FOR REUSE AT NEW LOCATION. PROTECT UNIT WITH PLASTIC DURING CONSTRUCTION UNTIL REINSTALLED.
2. RELOCATE EXISTING SPLIT SYSTEM INDOOR AND OUTDOOR UNIT AS INDICATED ON PLANS. SEE SHEET M100 FOR NEW LOCATION. PROTECT UNIT WITH PLASTIC DURING CONSTRUCTION UNTIL REINSTALLED.
3. EXISTING UNIT TO REMAIN IN SERVICE AND BE REUSED. PROTECT UNIT WITH PLASTIC DURING CONSTRUCTION UNTIL REINSTALLED.
4. EXISTING CONDENSATE DRAIN LINES SHALL BE DEMOLISHED AND REMOVED. REMOVE AND PROTECT EXISTING PLASTIC COVERS FOR REUSE.

GENERAL NOTES:

A. EXISTING EQUIPMENT, DUCTS, AND DEVICES SHOWN ON THIS PLAN ARE SCHEMATIC AND ARE BASED ON FIELD OBSERVATION. AS SUCH ACTUAL EQUIPMENT, DEVICE LOCATIONS AND SIZES MAY VARY FROM THESE SCHEMATIC PLANS. FIELD VERIFICATION BY THE CONTRACTOR IS REQUIRED. NOT ALL EQUIPMENT OR AIR DEVICES MAY BE SHOWN.

LEGEND:

(X)	DEMOLISH AND REMOVE
(R)	EXISTING TO BE RELOCATED
(N)	NEW EQUIPMENT
(E)	EXISTING TO REMAIN

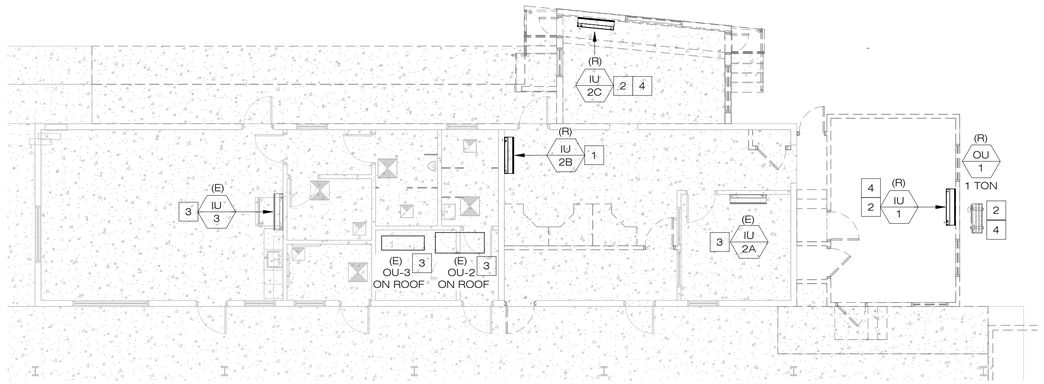

MECHANICAL DEMOLITION FLOOR PLAN - ADMIN BUILDING

1/8" = 1'-0"

PLAN NORTH

NORTH

APPLIED ENGINEERING
2800 S. RURAL RD. SUITE 101
TEMPE, AZ 85282 (480)968 3070
JOB NUMBER 25-041

Registered Professional Engineer (Mechanical) Certificate No. 29717 GREGORY PIRAINO Date Signed 06 30 26 Arizona, U.S.A. Expires 12/31/2026

Issue Date:	10 JULY 2026	
Revisions:	# Description	Date

gabor lorant architects
3326 n. 3rd avenue suite 200
phoenix, arizona 85013
tel: 602.667.9090
fax: 602.667.9133
gaborlorant.com
gla Project No.: 24102

ARIZONA DEPARTMENT OF TRANSPORTATION
PROJECT DELIVERY AND OPERATIONS DIVISION
PROJECT MANAGEMENT GROUP

SAN SIMON PORT OF ENTRY
MECHANICAL DEMOLITION FLOOR PLAN - ADMIN BUILDING

ROUTE I-10	F.H.W.A Arizona Division	STATE ARIZ.	PROJECT NO. 010 CH 383	FEDERAL ID NO. 010-F(238)T	SHEET NO. 149	TOTAL SHEETS 200	RECORD DRAWING
MILEPOST 383	LOCATION SAN SIMON PORT OF ENTRY (POE)						DWG NO. M030
STRUCTURE NO.	TRACS NO. F0728 01C						____ OF ____

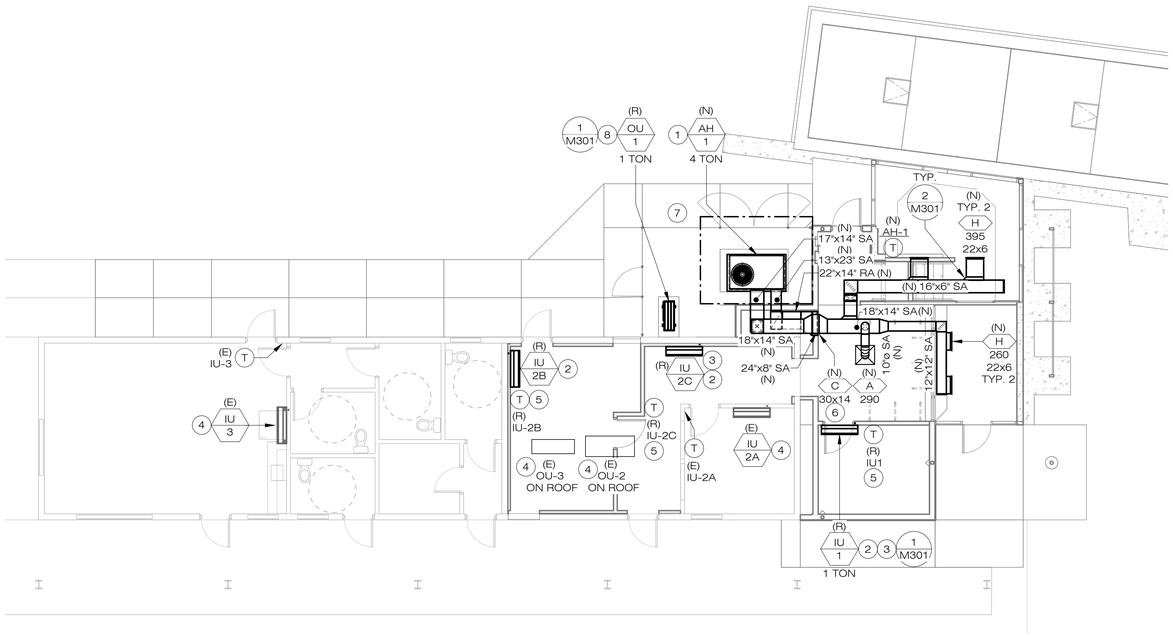

MECHANICAL FLOOR PLAN - ADMIN BUILDING

1/8" = 1'-0"

PLAN NORTH

NORTH

ⓒ MECHANICAL KEY NOTES:

1. PROVIDE AND INSTALL AIR HANDLER AND NEW DUCTS PER THESE PLANS AS SCHEDULED. SEE ELECTRICAL DRAWINGS FOR ELECTRICAL DISCONNECT AND PLUMBING PLANS FOR CONDENSATE TRAP AND DRAIN.
2. RELOCATE EXISTING DUCTLESS SPLIT INDOOR UNIT TO NEW LOCATION INDICATED ON PLANS. LOCATE AS HIGH ON WALL AS PRACTICAL. SEE ELECTRICAL DRAWINGS FOR POWER AND PLUMBING DRAWINGS FOR CONDENSATE DRAIN.
3. PER SPECIFICATIONS, PROVIDE NEW REFRIGERANT LINES BETWEEN RELOCATED IU'S AND OU'S AND ROUTE CONCEALED IN WALLS AND ABOVE CEILINGS. INSULATE BOTH LIQUID AND SUCTION LINES. PROVIDE ALUMINUM JACKET ON EXTERIOR INSULATION PER DETAIL ON PLANS.
4. EXISTING UNIT TO REMAIN IN SERVICE AND BE REUSED.
5. RELOCATE EXISTING THERMOSTAT AND LOCATE AT 48" A.F.F PROGRAM PER OWNER TEMPERATURE AND SETBACK SCHEDULE.
6. INSTALL RETURN GRILLE ON WALL JUST BELOW CEILING. FINISH COLOR AS SELECTED BY THE ARCHITECT.
7. OPEN METAL GRATING ENCLOSURE, SEE ARCHITECTURAL DRAWINGS.
8. RELOCATE EXISTING OUTDOOR UNIT AND ANCHOR TO CONCRETE. UNITS SHALL BE ORIENTATED PER PLANS SUCH THAT IT DIRECTS DISCHARGE AIR AWAY FROM AH-1. SEE ELECTRICAL PLANS FOR POWER.

GENERAL NOTES:

A. EXISTING EQUIPMENT, DUCTS, AND DEVICES SHOWN ON THIS PLAN ARE SCHEMATIC AND ARE BASED ON FIELD OBSERVATION. AS SUCH ACTUAL EQUIPMENT, DEVICE LOCATIONS AND SIZES MAY VARY FROM THESE SCHEMATIC PLANS. FIELD VERIFICATION BY THE CONTRACTOR IS REQUIRED. NOT ALL EQUIPMENT OR AIR DEVICES MAY BE SHOWN.

LEGEND:

(X)	DEMOLISH AND REMOVE
(R)	EXISTING TO BE RELOCATED
(N)	NEW EQUIPMENT
(E)	EXISTING TO REMAIN

APPLIED ENGINEERING
2800 S. RURAL RD. SUITE 101
TEMPE, AZ 85282 (480)968 3070
JOB NUMBER 25-041

Registered Professional Engineer Statement
Certificate No 29717
GREGORY PIRAINO
Civil
Signed
Arizona, U.S.A.
Expires 12/31/2026

Issue Date:	10 JULY 2026	
Revisions:	# Description	Date

gabor lorant architects
3326 n. 3rd avenue suite 200
phoenix, arizona 85013
tel: 602.667.9090
fax: 602.667.9133
gaborlorant.com
gla Project No.: 24102

ARIZONA DEPARTMENT OF TRANSPORTATION
PROJECT DELIVERY AND OPERATIONS DIVISION
PROJECT MANAGEMENT GROUP

SAN SIMON PORT OF ENTRY
MECHANICAL FLOOR PLAN - ADMIN BUILDING

ROUTE I-10
MILEPOST 383
STRUCTURE NO.

F.H.W.A Arizona Division

STATE	PROJECT NO.	FEDERAL ID NO.	SHEET NO.	TOTAL SHEETS	RECORD DRAWING
ARIZ.	010 CH 383	010-F(238)T	150	200	

LOCATION SAN SIMON PORT OF ENTRY (POE)

DWG NO. **M100**

TRACS NO. F0728 01C

___ OF ___

MECHANICAL KEY NOTES:

1. INSTALL NEW UNDERGROUND EXHAUST DUCT AS SCHEDULED.
2. PROVIDE AND INSTALL EXHAUST REGISTERS AS SCHEDULED AND PER DETAILS ON PLANS. PRE-COORDINATE WITH CONCRETE INSTALLER TO PREVENT CONFLICTS. ALL EXHAUST REGISTERS SHALL BE EQUALLY SPACED AND LOCATED ALONG THE SAME CENTERLINE AND LOCATED PER DETAIL 3/M300.
3. SEE STRUCTURAL DRAWINGS FOR FOOTER LOCATIONS AND REQUIREMENTS. PRE-COORDINATE UNDERGROUND DUCTS WITH CONCRETE SUB PRIOR TO CONSTRUCTION TO AVOID CONFLICTS. SURROUND DUCT WITH 8" OF CONCRETE SLURRY SO DUCT CAN PASS UNDER WALL FOOTING.
4. RISE EXHAUST DUCT UP THROUGH CONCRETE SLAB. SEE FLOOR PLAN SHEET M111 FOR CONTINUATION.
5. PROVIDE SELF-CONTAINED GAS DETECTOR WITH LOCAL STROBE AND AUDIBLE ALARM. MOUNT 3 FT ABOVE FLOOR SLAB. INSTALL IN STRICT ACCORDANCE WITH MANUFACTURERS INSTRUCTIONS.
6. FOR DUCT BURIED BELOW 48" OF THE BASE FLOOD ELEVATION, SLOPE DUCT 1/8" PER FOOT TO 22" DUCT RISE. INSTALL IN STRICT ACCORDANCE WITH MANUFACTURER'S INSTRUCTIONS.
7. PROVIDE SELF CONTAINED GAS DETECTOR WITH LOCAL STROBE AND AUDIBLE ALARM. MOUNT 6 FT ABOVE FLOOR SLAB. INSTALL IN STRICT ACCORDANCE WITH MANUFACTURERS INSTRUCTIONS.

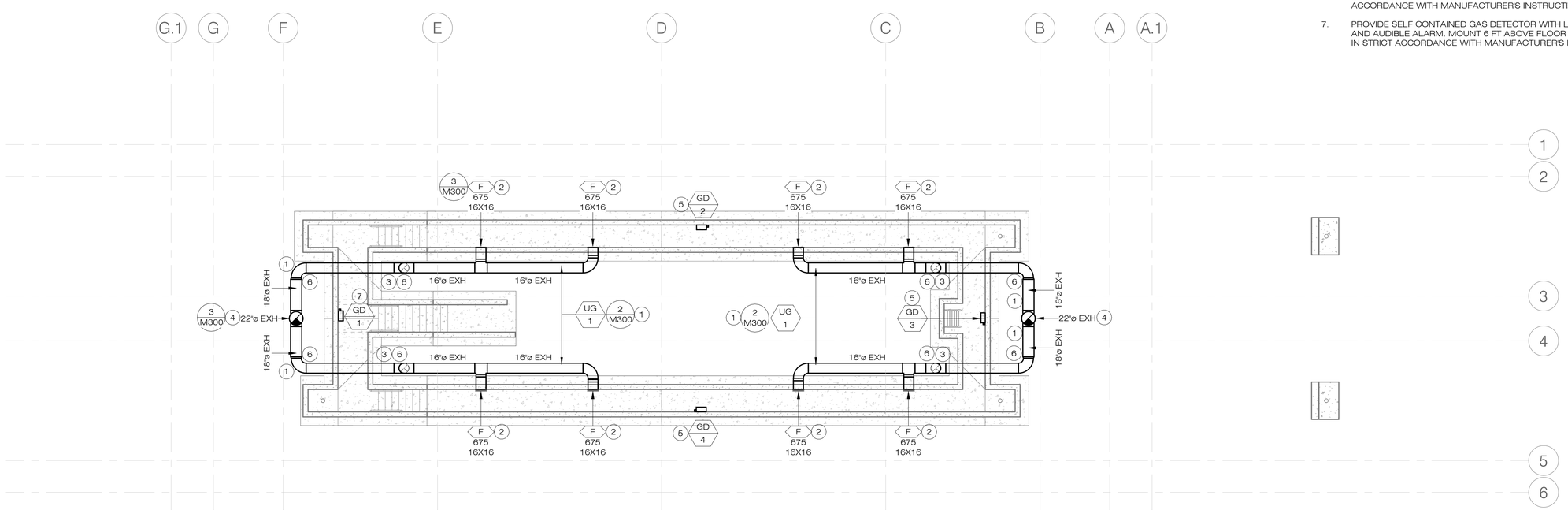

MECHANICAL FLOOR PLAN - INSPECTION BUILDING - PIT LEVEL EXHAUST SYSTEMS

1/8" = 1'-0"

PLAN NORTH NORTH

APPLIED ENGINEERING
2800 S. RURAL RD. SUITE 101
TEMPE, AZ 85282 (480)968 3070
JOB NUMBER 25-041

Certificate No. 29717 GREGORY PIRAINO Registered Professional Engineer State of Arizona U.S.A. Expires 12/31/2026

Issue Date:	10 JULY 2026	
Revisions:	# Description	Date

gabor lorant architects
3326 n. 3rd avenue suite 200
phoenix, arizona 85013
tel: 602.667.9090
fax: 602.667.9133
gaborlorant.com

gla Project No.: 24102

gla

ARIZONA DEPARTMENT OF TRANSPORTATION
PROJECT DELIVERY AND OPERATIONS DIVISION
PROJECT MANAGEMENT GROUP

SAN SIMON PORT OF ENTRY
MECHANICAL FLOOR PLAN - INSPECTION BUILDING - PIT LEVEL EXHAUST SYSTEMS

ROUTE I-10
MILEPOST 383
STRUCTURE NO.

F.H.W.A Arizona Division	STATE	PROJECT NO.	FEDERAL ID NO.	SHEET NO.	TOTAL SHEETS	RECORD DRAWING
	ARIZ.	010 CH 383	010-F(238)T	151	200	

LOCATION SAN SIMON PORT OF ENTRY (POE)

DWG NO. **M110**

TRACS NO. F0728 01C

___ OF ___

MECHANICAL KEY NOTES:

1. PROVIDE NEW IN-LINE EXHAUST FAN AS SCHEDULED AND INSTALL PER DETAIL 3/M300. SEE PIT LEVEL EXHAUST SYSTEM SHEET M110 FOR CONTINUATION.
2. PROVIDE NEW FLAT OVAL DUCT AS SHOWN. EXTEND DUCT THROUGH ROOF TO EVAPORATIVE COOLER ABOVE, SEE ROOF PLAN FOR CONTINUATION.
3. PROVIDE NEW EXHAUST HOOD AS SCHEDULED AND SET BOTTOM AT 16'-6" ABOVE FINISHED INSPECTION ROOM FLOOR PER DETAIL 4/M300. EXTEND 34" x 34" DUCT CONNECTION UP TO FAN ON ROOF. SEE DETAIL 4/M300. PROVIDE FLEX CONNECTION IN DUCT NEAR INLET TO EXHAUST FAN. SEE STRUCTURAL DRAWINGS FOR STRUCTURAL REQUIREMENTS.
4. UNIT HEATER MOUNTED AT A 45 DEG. TILT. MOUNT AT 14' A.F.F. INSTALL IN STRICT ACCORDANCE WITH MANUFACTURER'S INSTRUCTIONS. COORDINATE IN THE FIELD WITH ARCHITECT FOR PRECISE MOUNTING LOCATION.
5. PROVIDE NEW LOUVER AS SCHEDULED. PROVIDE A PLENUM BEHIND THE LOUVER AND EXTEND EXHAUST DUCT FROM THE NEW EXHAUST FAN TO THE PLENUM, SEE DETAIL 3/M300.
6. 36" x 40" RELIEF AIR OPENING TO VENTILATOR ON ROOF.
7. PROVIDE SELF-CONTAINED GAS DETECTOR MOUNT AT 4-6 FT AFF AND CONNECT TO REMOTE STROBE/HORN. INSTALL IN STRICT ACCORDANCE WITH MANUFACTURERS INSTRUCTIONS.
8. REMOTE STROBE/HORN, MOUNT 15' A.F.F AND CONNECT WITH SELF CONTAINED GAS DETECTOR. INSTALL IN STRICT ACCORDANCE WITH MANUFACTURER'S INSTRUCTIONS.
9. PROVIDE AND INSTALL REMOTE MOUNT EXHAUST FAN VFD. REFER TO EXHAUST SCHEDULE FOR VFD REQUIREMENTS AND SPECIFICATIONS.

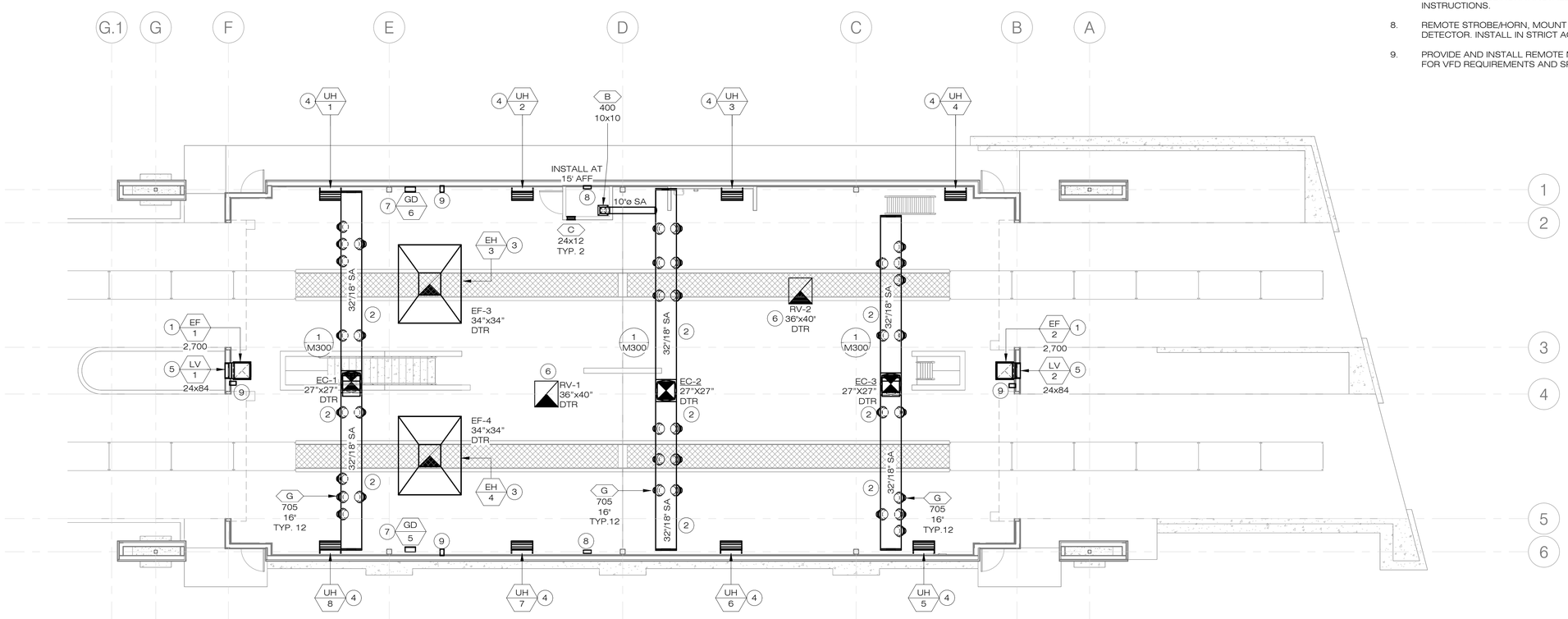

MECHANICAL FLOOR PLAN - INSPECTION BUILDING

1/8" = 1'-0"

PLAN NORTH NORTH

APPLIED ENGINEERING
2800 S. RURAL RD. SUITE 101
TEMPE, AZ 85282 (480)968 3070
JOB NUMBER 25-041

certificate no. 29717 GREGORY PIRAINO Registered Professional Engineer Arizona, U.S.A. Expires 12/31/2026

gla
gla Project No.: 24102
gabor lorant architects
3326 n. 3rd avenue suite 200
phoenix, arizona 85013
tel: 602.667.9090
fax: 602.667.9133
gaborlorant.com

Issue Date:	10 JULY 2026	
Revisions:	Δ Description	Date

ARIZONA DEPARTMENT OF TRANSPORTATION
PROJECT DELIVERY AND OPERATIONS DIVISION
PROJECT MANAGEMENT GROUP

SAN SIMON PORT OF ENTRY
MECHANICAL FLOOR PLAN - INSPECTION BUILDING

ROUTE	MILEPOST	STRUCTURE NO.
I-10	383	

F.H.W.A Arizona Division	STATE	PROJECT NO.	FEDERAL ID NO.	SHEET NO.	TOTAL SHEETS	RECORD DRAWING
	ARIZ.	010 CH 383	010-F(238)T	152	200	

LOCATION: SAN SIMON PORT OF ENTRY (POE)

TRACS NO. F0728 01C

DWG NO. **M111**

___ OF ___

MECHANICAL KEY NOTES:

1. PROVIDE AND INSTALL UPBLAST EXHAUST FAN AS SCHEDULED. ENSURE ALL EXHAUSTS ARE LOCATED A MINIMUM TEN FEET FROM ALL OSA INTAKES PER CODE.
2. PROVIDE AND INSTALL RELIEF VENT AS SCHEDULED. ENSURE ALL EXHAUSTS ARE LOCATED A MINIMUM TEN FEET FROM ALL OSA INTAKES PER CODE.
3. PROVIDE AND INSTALL NEW EVAPORATIVE COOLER AS SCHEDULED AND IN ACCORDANCE WITH DETAIL 5/M300. SEE STRUCTURAL DRAWINGS FOR SUPPORT REQUIREMENTS. SEE ELECTRICAL DRAWINGS FOR POWER. SEE PLUMBING PLANS FOR PIPING.

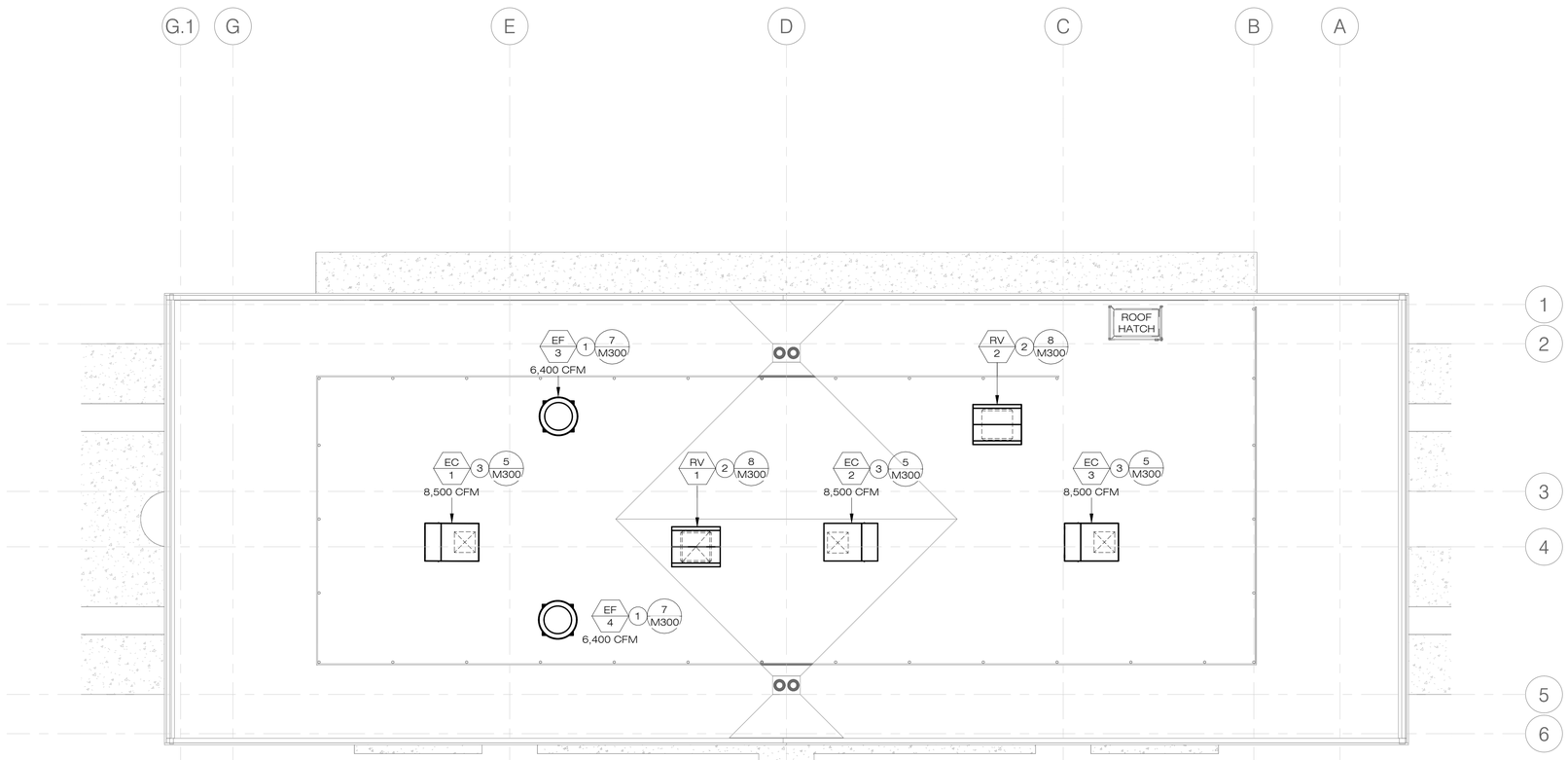

MECHANICAL ROOF PLAN - INSPECTION BUILDING

1/8" = 1'-0"

PLAN NORTH NORTH

APPLIED ENGINEERING
2800 S. RURAL RD. SUITE 101
TEMPE, AZ 85282 (480)968 3070
JOB NUMBER 25-041

Certificate No. 29717 GREGORY PIRAINO Civil Engineer Arizona, U.S.A. Expires 12/31/2026

gabor lorant architects
3326 n. 3rd avenue suite 200
phoenix, arizona 85013
tel: 602.667.9090
fax: 602.667.9133
gaborlorant.com
gla Project No.: 24102

Issue Date:	10 JULY 2026	
Revisions:	# Description	Date

ARIZONA DEPARTMENT OF TRANSPORTATION
PROJECT DELIVERY AND OPERATIONS DIVISION
PROJECT MANAGEMENT GROUP

SAN SIMON PORT OF ENTRY
MECHANICAL ROOF PLAN - INSPECTION BUILDING

ROUTE	MILEPOST	STRUCTURE NO.
I-10	383	

F.H.W.A Arizona Division	STATE	PROJECT NO.	FEDERAL ID NO.	SHEET NO.	TOTAL SHEETS	RECORD DRAWING
	ARIZ.	010 CH 383	010-F(238)T	153	200	

LOCATION: SAN SIMON PORT OF ENTRY (POE)

TRACS NO. F0728 01C

DWG NO. **M210**

___ OF ___

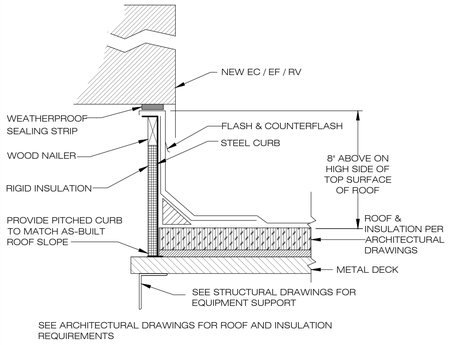

6 M300 ROOF CURB DETAIL

SCALE N.T.S.

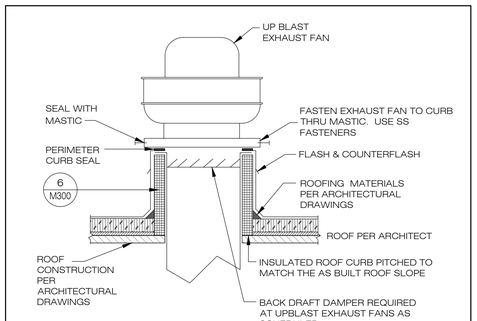

7 M300 UPBLAST EXHAUST FAN DETAIL

SCALE N.T.S.

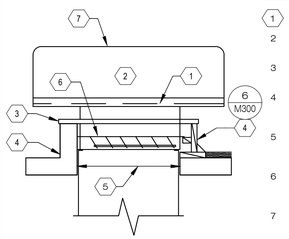

KEYNOTES:

1. BIRDSCREEN
2. LOW PROFILE EXHAUST / RELIEF VENTILATOR
3. INTEGRAL CURB CAP, SECURE AND CAULK TO ROOF CURB
4. PITCHED FACTORY CURB SECURELY ANCHORED TO ROOF. FLASH AND COUNTER FLASH.
5. ROOF OPENING - MINIMUM 1" LARGER THAN DUCT SIZE AS SHOWN ON PLANS
6. BACKDRAFT OR MOTORIZED DAMPER WHERE REQUIRED. SEE EQUIP. SCHED.
7. INSTALL UNIT PER MANUFACTURER'S INSTRUCTIONS

8 M300 ROOF VENTILATOR DETAIL

SCALE N.T.S.

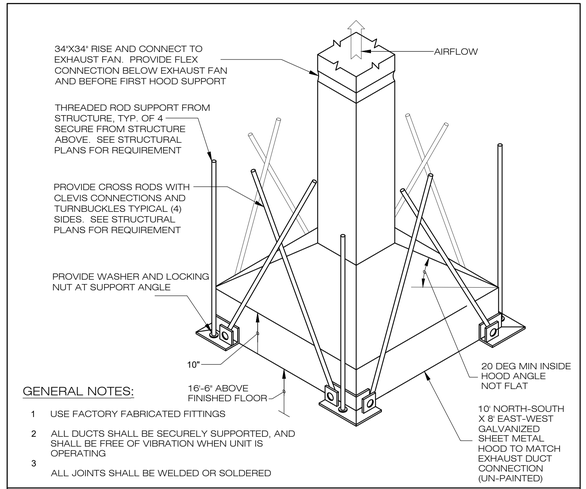

GENERAL NOTES:

1. USE FACTORY FABRICATED FITTINGS
2. ALL DUCTS SHALL BE SECURELY SUPPORTED, AND SHALL BE FREE OF VIBRATION WHEN UNIT IS OPERATING
3. ALL JOINTS SHALL BE WELDED OR SOLDERED

4 M300 EXHAUST HOOD DETAIL

SCALE N.T.S.

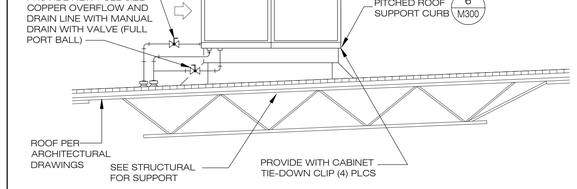

NOTES:

1. ALL MECHANICAL EQUIPMENT MUST BE FULLY SCREENED BY THE MECHANICAL SCREEN WALL.
2. THIS DETAIL IS DIAGRAMMATIC AND IS NOT TO SCALE - CREATE SHOP DRAWINGS PRIOR TO ORDERING PARTS OR FABRICATION OF DUCTS.
3. MECHANICAL CONTRACTOR TO COORDINATE SUPPLY, OVERFLOW, AND DRAIN RISER LOCATIONS WITH PLUMBING CONTRACTOR. MECHANICAL CONTRACTOR SHALL PROVIDE ALL PIPE, FITTING, SUPPORTS AND EXTEND PIPING FROM RISERS PROVIDED BY PLUMBING CONTRACTOR AND CONNECT TO (EC) UNIT. RUN FULL SIZE PIPE AND REDUCE CONNECTION AT UNIT.
4. PRE-COORDINATE ROOF CURB INSTALLATION AND CURB HEIGHT WITH ROOFING CONTRACTOR.
5. SET EC WATER BLEED RATE PER MANUFACTURER'S RECOMMENDATIONS BASED ON SIZE AND TYPE OF EC PROVIDED.
6. SEE CONTROL SPECIFICATIONS FOR EVAP CONTROLS AND INTERLOCKS.

5 M300 EVAPORATIVE COOLER SECTION AT INSPECTION BLDG

SCALE N.T.S.

THIS DETAIL IS FROM THE AQC INDUSTRIES BLUE DUCT INSTALLATION INSTRUCTIONS AND IS PROVIDED TO ASSIST THE CONTRACTOR WITH BLUE DUCT INSTALLATION. ALTERNATE PRODUCTS IF SUBMITTED MAY HAVE ALTERNATE TRENCH AND BACKFILL REQUIREMENTS. CONTRACTOR SHALL OBTAIN AND FOLLOW THE PROJECT SPECIFIC INSTRUCTIONS AND DETAILS FROM THE UNDERGROUND DUCT MANUFACTURER WHICH MAY BE MORE CURRENT AND SUPERCEDE THIS DETAIL. PROVIDE A MINIMUM 18" OF COVER ABOVE TOP OF DUCT.

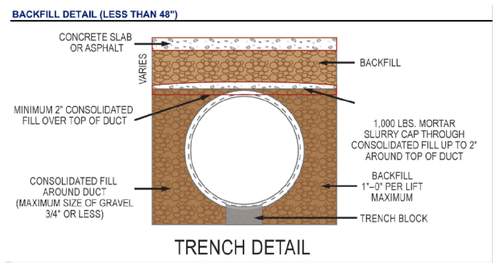

2 M300 BLUE DUCT TRENCH AND BACKFILL DETAIL

SCALE N.T.S.

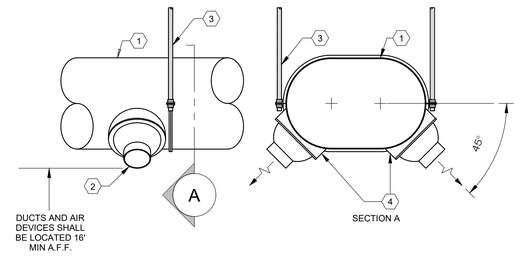

KEYNOTES:

1. FLAT OVAL SUPPLY DUCT
2. SUPPLY DISCHARGE NOZZLE AT A 45° DEGREE ANGLE WITH CONTRACTOR PROVIDED CONNECTING BOOT TO DUCT FITTING.
3. DUCT SUPPORTED FROM STRUCTURE. SEE SPECIFICATIONS FOR TYPE, EXPOSED SPEC AND SPACING REQUIREMENTS. INCLUDE ALL DIFFUSER-TO-DUCT CONNECTIONS.
4. INCLUDE ALL MOUNTING HARDWARE, AND SUPPORTS COMPLETE.

1 M300 INSPECTION BAY DUCT AND DISCHARGE NOZZLE DETAIL

SCALE N.T.S.

COORDINATE FAN, DUCT, PLENUM, AND LOUVER INSTALLATION WITH PLUMBING CONTRACTOR AND OTHER TRADES TO AVOID CONFLICTS. SEE PLUMBING PLANS FOR ROOF DRAIN LOCATIONS NEAR EF-1 AND EF-2

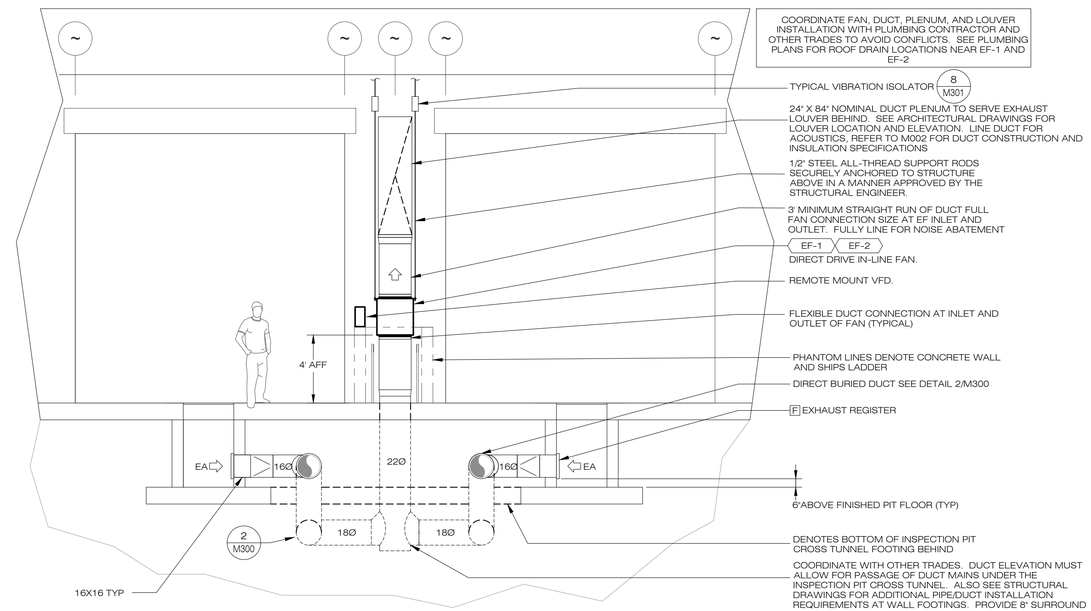

3 M300 IN LINE FAN DETAIL - PIT EXHAUST SYSTEM

SCALE N.T.S.

APPLIED ENGINEERING
2800 S. RURAL RD. SUITE 101
TEMPE, AZ 85282 (480)968 3070
JOB NUMBER 25-041

Certificate No 29717 GREGORY PIRAINO Registered Professional Engineer State of Arizona
Civil Signed 06-30-26
Expires 12/31/2028

Issue Date:	10 JULY 2026	
Revisions:	# Description	Date

gabor lorant architects
3326 n. 3rd avenue suite 200
phoenix, arizona 85013
tel: 602.667.9090
fax: 602.667.9133
gaborlorant.com
gla Project No.: 24102

ARIZONA DEPARTMENT OF TRANSPORTATION
PROJECT DELIVERY AND OPERATIONS DIVISION
PROJECT MANAGEMENT GROUP

SAN SIMON PORT OF ENTRY
MECHANICAL DETAILS

ROUTE I-10
MILEPOST 383
STRUCTURE NO.

F.H.W.A Arizona Division	STATE	PROJECT NO.	FEDERAL ID NO.	SHEET NO.	TOTAL SHEETS	RECORD DRAWING
	ARIZ.	010 CH 383	010-F(238)T	154	200	

LOCATION SAN SIMON PORT OF ENTRY (POE)

TRACS NO. F0728 01C

DWG NO. **M300**

___ OF ___

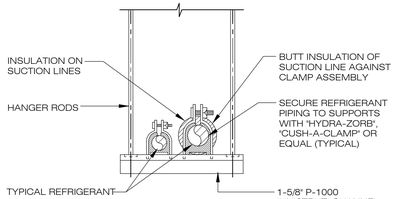

7 M301 REFRIGERANT PIPING TRAPEZE HANGER DETAIL SCALE N.T.S.

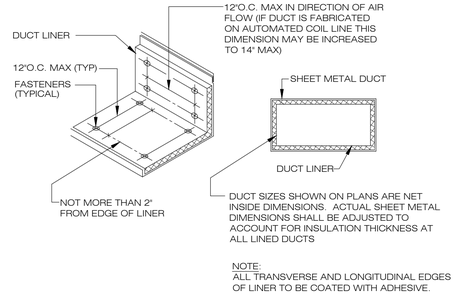

5 M301 DUCT LINER DETAIL SCALE N.T.S.

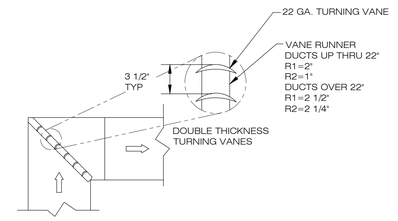

3 M301 TYPICAL DUCT TURN DETAIL SCALE N.T.S.

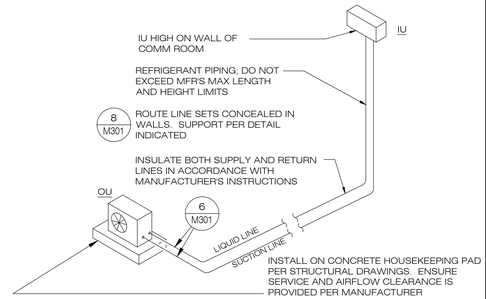

1 M301 RELOCATED DUCTLESS SPLIT SYSTEM DETAIL (OU/IU) SCALE N.T.S.

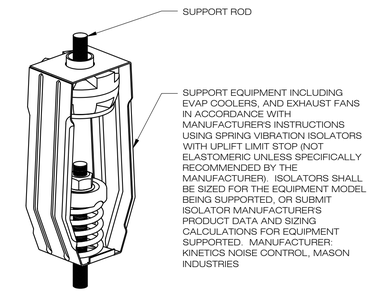

8 M301 TYPICAL VIBRATION ISOLATOR DETAIL SCALE N.T.S.

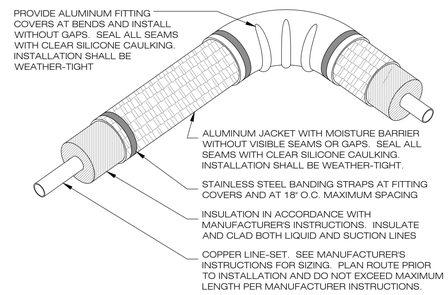

6 M301 EXTERIOR INSULATED REFRIGERANT PIPING DETAIL SCALE N.T.S.

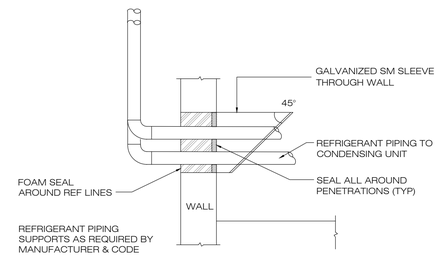

4 M301 REFRIGERANT PIPING THRU WALL DETAIL SCALE N.T.S.

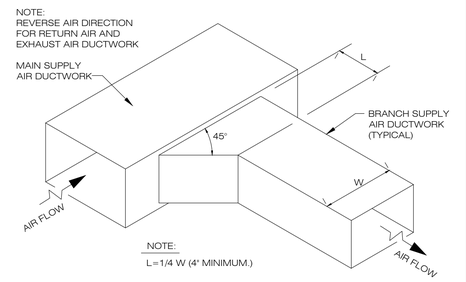

2 M301 DUCT BRANCH CONNECTION DETAIL SCALE N.T.S.

OUTSIDE AIR VENTILATION CALCULATIONS (2018 IMC)

2018 IMC VENTILATION RATE PROCEDURE													SYSTEM CALCULATION				OSA PROVIDED
OCCUPANCY CLASSIFICATION	AREA (SF)	Rp TABLE 403.3.1.1 (CFM / PERSON)	Ra TABLE 403.3.1.1 (CFM/SF)	OCCUPANT DENSITY (#/1000 SF)	Pz ZONE POPULATION	Vp (CFM)	Va (CFM)	Vbz BREATHING ZONE OSA (CFM)	Ez TABLE 403.3.1.1.1.2 ZONE EFFECTIVENESS	Voz MINIMUM REQUIRED OSA TO ZONE (CFM)	Vpzm =Vdzm ZONE PRIMARY AIR FLOW FRACTION (CFM)	Zp=Voz/Vpz PRIMARY OUTDOOR AIR FRACTION	D OCCUPANT DIVERSITY	Vou UNCORRECTED OSA REQUIREMENT FOR SYSTEM (CFM)	Ev APPENDIX A SYSTEM VENTILATION EFFICIENCY	[Vot] DESIGN OUTDOOR INTAKE FLOW AT SYSTEM (CFM)	
LOBBY	107	5	0.06	10	1	5	6	12	0.80	15	520	0.03			1.08		
WEIGHMASTER (OFFICE)	153	5	0.06	5	1	4	9	13	0.80	16	790	0.02			1.05		
PERMIT OFFICE (OFFICE)	219	5	0.06	5	1	5	13	19	0.80	23	290	0.08			1.11		
SYSTEM: AH-1											Max (Zp)	0.08	1.00	54	1.05	52	**55**

ADMIN BUILDING COMPLIANCE: 52 CFM OSA REQUIRED, 55 CFM OSA PROVIDED. OSA PROVIDED MEETS 2018 IMC AND ASHRAE 62.1 REQUIREMENTS.

CALCULATION NOTES:
A. COOLING AND HEATING VENTILATION CALCULATIONS ARE IN ACCORDANCE WITH IMC 2018 SECTION 403 AND ASHRAE 62.1 REQUIREMENTS.
B. ZONE AIR DISTRIBUTION EFFECTIVENESS EZ=0.8 USED FOR CEILING SUPPLY OF WARM AIR AND CEILING RETURN PER IMC TABLE 403.3.1.1.1.2.

TEST AND BALANCE NOTES:
1. TEST AND BALANCE CONTRACTOR TO ADJUST EACH UNITS OUTSIDE AIR INTAKE IN ACCORDANCE WITH THE OSA PROVIDED COLUMN IN THE TABLE ABOVE:
2. SEE CONTROL SPECIFICATIONS AND SEQUENCE OF OPERATIONS FOR UNIT OUTSIDE AIR AND EXHAUST CONTROLS.
3. THE CITY INSPECTOR SHALL RECEIVE A COPY OF A THIRD PARTY CERTIFIED AIR BALANCE REPORT CONDUCTED IN ACCORDANCE WITH AABC OR NEBB TESTING STANDARDS PRIOR TO THE ISSUE OF THE CERTIFICATE OF OCCUPANCY.
4. TAB CONTRACTOR SHALL INCLUDE COORDINATION WITH THE CONTROLS CONTRACTOR IN THE SCOPE OF WORK.
5. ALL EXHAUST FANS HAVE SPEED CONTROLS TO BE SET DURING TAB.

ADMIN BUILDING PARTIAL BUILDING AIR BALANCE AND PRESSURE EQUALIZATION IN ACCORDANCE WITH IMC 2018 SECTION 501.4:
- 50 CFM OSA - 50 CFM BUILDING RELIEF = 0. SLIGHTLY POSITIVE AREA PRESSURIZATION

INSPECTION BUILDING EXHAUST PER 2018 IMC SECTION 404.1:
- THE INSPECTION BAY IS EXHAUSTED BY EF-1,2,3,& 4. EFS 1-4 OPERATE CONTINUOUSLY 24/7/365 TO EXHAUST THE AREA NOT LESS THAN 0.75 CFM/SF.

APPLIED ENGINEERING
2800 S. RURAL RD. SUITE 101
TEMPE, AZ 85282 (480)968 3070
JOB NUMBER 25-041

Registered Professional Engineer Certificate No. 29717 GREGORY PIRAINO Date Signed 12-30-25 Expires 12/31/2028

Issue Date:	10 JULY 2026	
Revisions:	# Description	Date

gabor lorant architects
3326 n. 3rd avenue suite 200
phoenix, arizona 85013
tel: 602.667.9090
fax: 602.667.9133
gaborlorant.com
gla Project No.: 24102

ARIZONA DEPARTMENT OF TRANSPORTATION
PROJECT DELIVERY AND OPERATIONS DIVISION
PROJECT MANAGEMENT GROUP

SAN SIMON PORT OF ENTRY
MECHANICAL DETAILS AND OSA VENTILATION CALCULATIONS

ROUTE I-10 | MILEPOST 383 | STRUCTURE NO.

F.H.W.A Arizona Division | STATE ARIZ. | PROJECT NO. 010 CH 383 | FEDERAL ID NO. 010-F(238)T | SHEET NO. 155 | TOTAL SHEETS 200 | RECORD DRAWING

LOCATION SAN SIMON PORT OF ENTRY (POE)

TRACS NO. F0728 01C

DWG NO. **M301**

___ OF ___

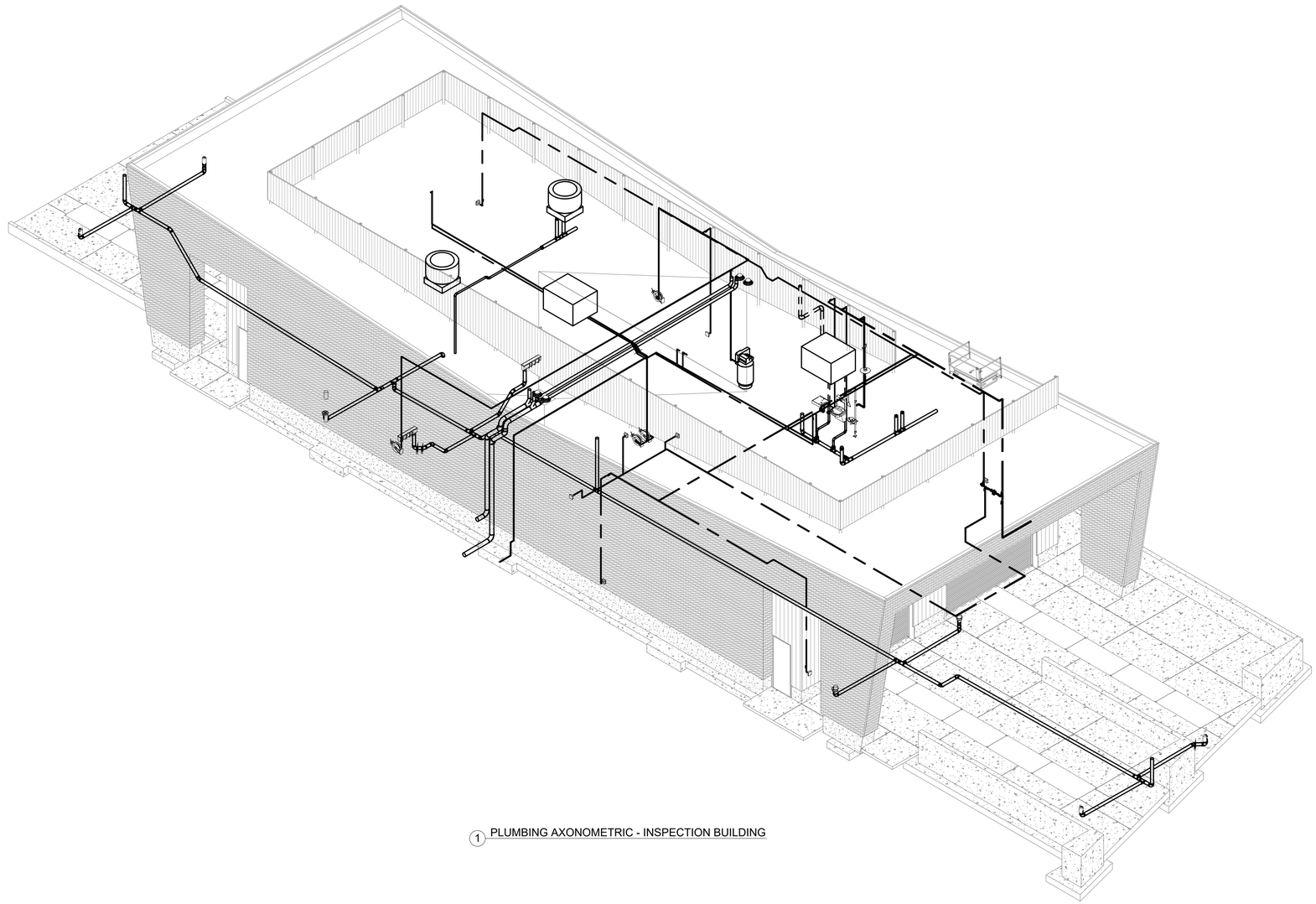

1 PLUMBING AXONOMETRIC - INSPECTION BUILDING

APPLIED ENGINEERING
2800 S. RURAL RD. SUITE 101
TEMPE, AZ 85282 (480)968 3070
JOB NUMBER 25-041

Registered Professional Engineer (Mechanical)
Certificate No. 29717
GREGORY PIRAINO
Date Signed 06-30-26
Arizona, U.S.A.
Expires 12/31/2028

Issue Date:	10 JULY 2026	
Revisions:	# Description	Date

gabor lorant architects
3326 n. 3rd avenue suite 200
phoenix, arizona 85013
tel: 602.667.9090
fax: 602.667.9133
gaborlorant.com

gla Project No.: 24102

gla

ARIZONA DEPARTMENT OF TRANSPORTATION
PROJECT DELIVERY AND OPERATIONS DIVISION
PROJECT MANAGEMENT GROUP

SAN SIMON PORT OF ENTRY
PLUMBING AXONOMETRIC - INSPECTION BUILDING

ROUTE	F.H.W.A Arizona Division	STATE	PROJECT NO.	FEDERAL ID NO.	SHEET NO.	TOTAL SHEETS	RECORD DRAWING
I-10		ARIZ.	010 CH 383	010-F(238)T	156	200	
MILEPOST 383	LOCATION	SAN SIMON PORT OF ENTRY (POE)					DWG NO. P000
STRUCTURE NO.	TRACS NO. F0728 01C						___ OF ___

PLUMBING SYMBOL LEGEND

ABBREVIATIONS

A	AIR COMPRESSED
AFF	ABOVE FINISHED FLOOR
AFG	ABOVE FINISHED GRADE
ANT	ACID NEUTRALIZING TANK
AVTR	ACID RESISTANT VENT THROUGH ROOF
B.C.	BALANCING COCK
BOP	BOTTOM OR PIPE
BTU	BRITISH THERMAL UNIT
BTUH	BTU PER HOUR
CWB	CLOTHES WASHER BOX
CD	CONDENSATE DRAIN
CFH	CUBIC FEET PER HOUR
CO	CLEANOUT
COTG	CLEANOUT TO GRADE
CP	CIRCULATION PUMP
CWV	COMBINATION WASTE AND VENT
CW	COLD WATER
DCO	DOUBLE CLEANOUT
DC OTG	DOUBLE CLEANOUT TO GRADE
DF	DRINKING FOUNTAIN
DN	DOWN
DS	DOWNSPOUT
EL	ELEVATION
EWH	ELECTRIC WATER HEATER
EWC	ELECTRIC WATER COOLER
EEW	EMERGENCY EYEWASH
ES	EMERGENCY SHOWER
ESEW	EMERGENCY SHOWER EYE WASH
°F	DEGREES FAHRENHEIT
FCO	FLOOR CLEANOUT
FFE	FINISHED FLOOR ELEVATION
FT	FEET
FOS	FUEL OIL SUPPLY
FOR	FUEL OIL RETURN
FOV	FUEL OIL VENT
FV	FLUSH VALVE
GD	GUTTER DRAIN
GI	GREASE INTERCEPTOR
GPH	GALLONS PER HOUR
GPM	GALLONS PER MINUTE
GWH	GAS WATER HEATER
HB	HOSE BIBB
HD	HEAD
HP	HORSEPOWER
HW	HOT WATER
IN	INCHES
INV	INVERT
KW	KILOWATT
MBh	1,000 BTUH
MV	MIXING VALVE
NA	NOT APPLICABLE
NIC	NOT IN CONTRACT
No. #	NUMBER
N.C.	NORMALLY CLOSED
N.O.	NORMALLY OPEN
OFD	OVERFLOW DRAIN
OS&Y	OUTSIDE SCREW AND YOKE
P-1	PLUMBING FIXTURE SYMBOL
Ph	PHASE
PH	POWER OF HARDNESS
PSIG	POUNDS PER SQUARE INCH GAUGE
PW	PROCESS WATER
RD	ROOF DRAIN
RPZ	REDUCED PRESSURE ZONE
SCO	SURFACE CLEANOUT
S/O	SAND/ OIL WASTE
SP	STATIC PRESSURE
SOG	SLAB ON GRADE
U/G	UNDERGROUND
TD	TRENCH DRAIN
TYP	TYPICAL
YB	YARD BOX
YH	YARD HYDRANT
VTR	VENT THROUGH ROOF
WCO	WALL CLEANOUT
WC	WATER CLOSET
WH	WALL HYDRANT

SECTION SYMBOL



DETAIL SYMBOL



SECTION, ELEVATION, AND DETAIL TITLES

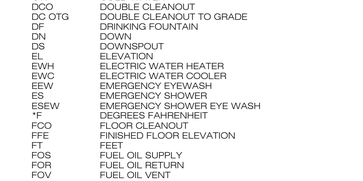

PIPING SYMBOLS

SYMBOL	ABBREVIATION	DESCRIPTION
AV	AV	ACID VENT
AW	AW	ACID WASTE
A	A	COMPRESSED AIR
A U/G	A U/G	COMPRESSED AIR UNDERGROUND
CND	CND	CONDENSATE DRAIN
CW	DCW	DOMESTIC COLD WATER
CW U/G	CW U/G	UNDERGROUND DOMESTIC COLD WATER
PW	PW	PROCESS WATER
HW	DHW	DOMESTIC HOT WATER
DHC	DHC	DOMESTIC HOT WATER RETURN
DHW 140F	DHW	140° DOMESTIC HOT WATER
DHC 140F	DHC	140° DOMESTIC HOT WATER RETURN
ROS	ROS	REVERSE OSMOSIS SUPPLY
ROR	ROR	REVERSE OSMOSIS RETURN
MU	MU	MAKE-UP WATER
NPW	NPW	NON-PORTABLE WATER
V	V	VENT
6 DIS	DIS	DEIONIZED WATER SUPPLY
6 DIR	DIR	DEIONIZED WATER RETURN
SAN	SAN	SANITARY SEWER
SO	SO	SAND / OIL SANITARY SEWER
SD / RD	SD / RD	STORM/ROOF DRAIN
OFD	OFD	OVERFLOW ROOF DRAIN / EVAP OVERFLOW DRAIN
ORD	ORD	LIQUEFIED PETROLEUM GAS
LPG	LPG	NATURAL GAS-LOW PRESSURE
G	G	NATURAL GAS-MEDIUM PRESSURE
NGM	NGM	NATURAL GAS-HIGH PRESSURE
NGH	NGH	GAS VENT
GV	GV	IRRIGATION
IRR	IRR	SOFT COLD WATER
SCW	SCW	SOFT HOT WATER
SHW	SHW	TEMPERED WATER RETURN (TEMP °F)
TWR (_ _)	TWR	TEMPERED WATER (TEMP °F)
TW (_ _)	TW	PUMPED DISCHARGE LINE
PD	PD	INDUSTRIAL COLD WATER
ICW	ICW	INDUSTRIAL HOT WATER
IHW	IHW	INDUSTRIAL HOT WATER RETURN
IHWR	IHWR	INDUSTRIAL WASTE
INW	INW	INSTRUMENT COMPRESSED AIR
IA	IA	INDIRECT WASTE
IW	IW	LAB COMPRESSED AIR
LA	LA	DIRECTION OF FLOW
		PIPE ANCHOR
		PIPE GUIDE
		REDUCER OR INCREASER
		ECCENTRIC REDUCER
		TOP CONNECTION 45° OR 90°
		BOTTOM CONNECTION 45° OR 90°
		SIDE CONNECTION
		CAPPED OUTLET
		DROP IN PIPE
		RISE IN PIPE
		UNION
		FLANGED UNION
		ORIFICE UNION
		UNIVERSAL TEMPERATURE-PRESSURE FITTING (PETE'S PLUG)
		FLEXIBLE CONNECTION
		NEW PIPING
		EXISTING PIPING TO REMAIN
		EXISTING PIPE TO BE REMOVED
		NEW PIPE CONNECTION TO EXISTING PIPING
		STRAINER WITH BLOWDOWN VALVE & HOSE BIBB
		THERMOMETER
		PRESSURE GAUGE AND GAUGE COCK
		AQUASTAT
		POINT OF CONNECTION TO EXISTING
	WHA	WATER HAMMER ARRESTOR
	MAV	MANUAL AIR VENT (MAV)
	AAV	AUTOMATIC AIR VENT (AAV)
	FS/FD/AD	FLOOR SINK, FLOOR DRAIN, AREA DRAIN, CLEANOUT
	CO	TWO WAY CLEANOUT OR DOUBLE CLEANOUT
	DCO	ROOF DRAIN/OVERFLOW DRAIN/DECK DRAIN
	RD/OD/DD	
		TEST PLUG (PRESS/TEMP) PENETRATION

SITE UTILITY SYMBOLS

DESCRIPTION		
SANITARY SEWER	S	S
COLD WATER SUPPLY	CW	W
FIRE PROTECTION	F	F
NATURAL GAS	G	G
STORM DRAIN	SD	SD
IRRIGATION	IRR	IRR
VALVE WITH THE VALVE BOX		
FIRE HYDRANT	F.H.	F.H. (E)
FIRE DEPARTMENT INLET CONNECTION	F.D.C.	F.D.C.
CONSTRUCTION		
NEW CONNECTION TO EXISTING		
KEYED NOTE	2	
THRUST BLOCK		
CLEANOUT	SAS C.O.	SAS C.O. (E)
POWER POLE	PP	PP
FENCING		
LIGHT POLE	LP	LP
WATER METER	WM	WM
NATURAL; GAS METER	GM	GM
GATE VALVE		
VALVE IN RISER		
POST INDICATOR VALVE	PIV	PIV
REDUCED PRESSURE BACKFLOW (RPZ)		RPZ
DOUBLE CHECK BACKFLOW PREVENTER		
DOUBLE DETECTOR CHECK ASSEMBLY		
SANITARY MANHOLE	SAS M.H.	SAS M.H. (E)
SLOPE AND LINEAL FOOTAGE	255' OF 6" @ 0.15% SLOPE	

SCHEMATIC SYMBOLS

TP	TRAP PRIMER WITH ACCESS PANEL
	SLOPE OF PIPE
VTR	VENT THROUGH ROOF
AG	AIR GAP FITTING
(WH) (HB)	WALL HYDRANT. HOSE BIBB

VALVE SYMBOLS

SYMBOL	DESCRIPTION
	BALL VALVE
S	SOLENOID VALVE
	OS&Y VALVE
	GLOBE VALVE
	BUTTERFLY VALVE
	CHECK VALVE
	PLUG VALVE
	BALANCING VALVE/CIRCUIT SETTER MEASURING DEVICE
	WATER PRESSURE REDUCING VALVE
	FUEL GAS PRESSURE REGULATOR
	PRESSURE RELIEF VALVE
	TEMPERATURE AND PRESSURE RELIEF VALVE DRAIN VALVE
	2-WAY CONTROL VALVE
	3-WAY MODULATING CONTROL VALVE
	FLOW SWITCH
	DIAPHRAGM (PROCESS SYSTEMS)
	AUTO BALL DRIP VALVE
	VALVE IN VERTICAL
	REDUCED PRESSURE BACKFLOW PREVENTER (RPBP)
	DOUBLE CHECK BACKFLOW PREVENTER (OCBP)
	DOUBLE DETECTOR CHECK ASSEMBLY (DDCA)
	ATMOSPHERIC VACUUM BREAKER
	PRESSURE STYLE VACUUM BREAKER

NOTE: NOT ALL ABBREVIATIONS OR SYMBOLS APPLY TO THIS PROJECT

PLUMBING SHEET INDEX

SHEET NUMBER	SHEET TITLE
P000	PLUMBING AXONOMETRIC - INSPECTION BUILDING
P001	PLUMBING ABBREVIATIONS AND LEGEND
P002	PLUMBING SCHEDULES
P100	SANITARY WASTE FLOOR AND ROOF PLAN - ADMIN BUILDING AND WEIGH SCALE
P110	SANITARY WASTE FLOOR PLAN - INSPECTION BUILDING - PIT LEVEL
P111	SANITARY WASTE FLOOR PLAN - INSPECTION BUIDLING
P210	DOMESTIC WATER FLOOR PLAN - INSPECTION BUILDING
P310	PLUMBING ROOF PLAN - INSPECTION BUILDING
P400	ISOMETRIC PLAN - SANITARY WASTE & WEIGH SCALE
P410	ISOMETRIC PLAN - DOMESTIC WATER & COMPRESSED AIR
P500	PLUMBING DETAILS
P501	PLUMBING DETAILS

APPLIED ENGINEERING
2800 S. RURAL RD. SUITE 101
TEMPE, AZ 85282 (480)968 3070
JOB NUMBER 25-041

Certificate No 29717 GREGORY PIPIANO Date Signed 06-30-26 Registered Professional Engineer Arizona
Expires 12/31/2028

gabor lorant architects
3326 n. 3rd avenue suite 200
phoenix, arizona 85013
tel: 602.667.9090
fax: 602.667.9133
gaborlorant.com
gla Project No.: 24102

Issue Date:	10 JULY 2026	
Revisions:	# Description	Date

ARIZONA DEPARTMENT OF TRANSPORTATION
PROJECT DELIVERY AND OPERATIONS DIVISION
PROJECT MANAGEMENT GROUP

SAN SIMON PORT OF ENTRY
PLUMBING ABBREVIATIONS AND LEGEND

ROUTE	MILEPOST	STRUCTURE NO.
I-10	383	

F.H.W.A Arizona Division	STATE	PROJECT NO.	FEDERAL ID NO.	SHEET NO.	TOTAL SHEETS	RECORD DRAWING
	ARIZ.	010 CH 383	010-F(238)T	157	200	

LOCATION: SAN SIMON PORT OF ENTRY (POE)

TRACS NO. F0728 01C

DWG NO. **P001**

___ OF ___

PLUMBING SPECIFICATIONS

1. ALL WORK SHALL COMPLY WITH ALL APPLICABLE FEDERAL, STATE AND LOCAL CODES, LAWS, ACTS AND ALL AUTHORITIES HAVING JURISDICTION INCLUDING, BUT NOT LIMITED TO THE 2018 IMC, 2018 IPC, 2018 IBC, 2018 IECC, 2017 NEC, 2018 IFC WITH AMENDMENTS AS ADOPTED BY THE STATE OF ARIZONA.

2. WORK SHALL INCLUDE ALL MATERIALS, LABOR, SERVICES AND EQUIPMENT NECESSARY TO PROVIDE AN OPERATING SYSTEM AS SHOWN ON THE PLANS. PLANS ARE SCHEMATIC AND ARE NOT INTENDED TO SPECIFY ALL INCIDENTAL HARDWARE OR IDENTIFY ALL OFFSETS OR DIFFICULTIES WHICH MAY BE ENCOUNTERED IN THE COURSE OF COMPLETING THE PROJECT. DO NOT SCALE THE PLANS. CONTRACTORS SHALL FIELD MEASURE PRIOR TO ORDERING OR CONSTRUCTING SYSTEM.

3. ALL WORK SHALL COMPLY WITH WRITTEN SPECIFICATIONS.

4. ALL WATER PIPING SHALL BE IDENTIFIED PER 2018 IPC INCLUDING PROCESS WATER IDENTIFICATION PROVISIONS.

GENERAL NOTES

1. UTILITY SERVICE:

   A. NEW WATER SERVICE AND METER: SEE CIVIL AND PLUMBING SITE DRAWINGS.
   B. NEW SEWER: SEE PLUMBING SITE DRAWINGS.
   C. ADDITIONAL INFORMATION SEE SPECIFICATIONS.

2. UTILITY NOTES:

   A. CONTRACTOR SHALL EXERCISE EXTREME CARE TO AVOID DAMAGE WHEN EXPOSING UNDERGROUND SERVICE. THE CONTRACTOR SHALL REQUEST THAT UTILITY AGENCIES LOCATE AND MARK ANY UNDERGROUND PIPING OR CABLES THAT MAY BE IN THE AREA OF WORK. WHERE AN UNDERGROUND UTILITY IS ENCOUNTERED WHICH IS NOT SHOWN ON THE PLANS OR MENTIONED IN ANY OTHER CONTRACT DOCUMENT, THE CONTRACTOR SHALL DISCONTINUE THE EXCAVATION AND IMMEDIATELY CALL THE ARCHITECT FOR INSPECTION.

   B. PRIOR TO INSTALLATION OF ANY SEWER OR STORM DRAIN LINES, THE CONTRACTOR SHALL DISCONTINUE THE EXCAVATION AND IMMEDIATELY CALL THE ARCHITECT FOR INSPECTION.

3. BACKFLOW PROTECTION:

   A. PERMANENT VACUUM BREAKERS SHALL BE INCLUDED WITH WH-1 & WH-2.

   B. CROSS CONNECTION PROTECTION SHALL BE PROVIDED AT ALL POTABLE WATER SUPPLIED APPLIANCES AND EQUIPMENT IN ACCORDANCE WITH THE PROVISIONS.

4. PLUMBING FIXTURE NOTES:

   A. FLOOR SINK SHALL BE SET FLUSH WITH THE FINISHED SURFACE UNLESS OTHERWISE NOTED.

5. SLOPE OF PIPING SYSTEM:

   A. SANITARY SEWER & WASTE 3" AND LARGER: 1% UNLESS NOTED OTHERWISE.
   B. SANITARY SEWER & WASTE 2" AND SMALLER: 2% UNLESS NOTED OTHERWISE.
   C. ROOF DRAIN & OVERFLOW DRAIN PIPING: 1% UNLESS NOTED OTHERWISE.
   D. CONDENSATE DRAIN PIPING: 1% UNLESS NOTED OTHERWISE.

6. COORDINATION:

   A. CONTRACTOR TO REVIEW STRUCTURAL ENGINEER DRAWINGS FOR ALL FOOTING SIZES, DEPTH AND LOCATIONS.
   B. COORDINATE ALL UNDERGROUND PIPING WITH STRUCTURAL AND ELECTRICAL DRAWINGS.
   C. COORDINATE SLEEVES THROUGH BEAMS, GRADE BEAM, AND FOOTINGS WITH STRUCTURAL ENGINEERS DETAILS.
   D. COORDINATE WASTE AND WATER ENTRY WITH STRUCTURAL REQUIREMENTS AND DRAWINGS. SEE STRUCTURAL DRAWINGS FOR ADDITIONAL PIPE INSTALLATION REQUIREMENTS AT WALL FOOTINGS.

PLUMBING FIXTURE SCHEDULE

L-1
TYPE: LAVATORY WALL MOUNTED (ADA):
FIXTURE: AMERICAN STANDARD COMRADE MODEL #0124.131, 4" ON CENTER HOLES, COLOR WHITE, LAVATORY AND SHROUD TO BE VITREOUS CHINA, WITH OVERFLOW. SUPPLY FITTINGS: SLOAN MODEL # EBF-415-4-CP-BDT-0.5GPM FAUCET (0.5 GPM AERATOR MAX). SINGLE HOLE. BATTERY POWERED. SUPPLIES: PROVIDE CHROME PLATE ANGLE STOPS WITH QUARTER-TURN ACTION. WATER SUPPLY LINE TO BE BRAIDED STAINLESS STEEL HOSE. PROVIDE LAVATORY FLOOR CARRIER.
TRAP: ADJUSTABLE CAST BODY P-TRAP WITH CLEANOUT PLUG, ESCUTCHEON, CHROME FINISH. INSULATION: ADA-CONFORMING, WHEELCHAIR ACCESSIBLE LAVATORY P-TRAP AND ANGLE VALVE ASSEMBLIES SHALL BE COVERED WITH MOLDED, ANTIMICROBIAL TRUEBRO, INC. LAV GUARD UNDER SINK PROTECTIVE PIPE COVER MODEL #103. INSTALL PER MANUFACTURERS INSTRUCTIONS OR APPROVED EQUAL.

DF-1
TYPE: DRINKING FOUNTAIN, ENHANCED BOTTLE FILLER & SINGLE ADA COOLER:
FIXTURE: ELKAY MODEL #LZS8WSSP FILTER MODEL#51600C
FILTERED EZH20 BOTTLE FILLING STATION WITH VERSATILE SINGLE LEVEL ADA, WATER SYSTEM FREE OF LEAD-CONTAINING BRASS PARTS, FLEXI-GUARD SAFETY BUBBLER. SELF-CLOSING FRONT PUSH BUTTON. 120V/1PH/5.0 AMPS SUPPLIES: ANGLE STOPS WITH FLEXIBLE TUBE RISERS. TRAP: P-TRAP WITH CLEANOUT PLUG, ESCUTCHEON, CHROME FINISH. INSTALL PER MANUFACTURER'S INSTRUCTIONS OR APPROVED EQUAL.

SP-1
TYPE: SUMP PUMP (WEIGH SCALE):
CONTRACTOR SHALL FURNISH AND INSTALL EXPLOSION-PROOF SUBMERSIBLE SUMP. PUMPS SHALL BE ABLE TO HANDLE FLAMMABLE LIQUIDS, CHEMICALS, AND HAZARDOUS MATERIALS. SP-1 DESIGNED TO DELIVER 50 GPM AT 20FT. OF PRESSURE HEAD AND CAPABLE OF BEING OPERATED FOR LONG PERIODS WITHOUT DAMAGE TO MOTOR AND /OR SEALS. PUMP SHALL BE EXPLOSION PROOF, CORROSION RESISTANT, 316 STAINLESS STEEL, FM-APPROVED EXPLOSION PROOF MOTOR, NFPA(70), CAST 316 STAINLESS STEEL. AUTOMATIC DISCHARGE PIPE MOUNTED MECHANICAL FLOAT SWITCH. THE MOTOR SHALL BE VERTICAL, NEMA-10, 3/4HP, 115V/1PH/60HZ, AND SHALL OPERATE AT 1750 RPM. MINIMUM 15 FEET UL LISTED POWER CORD. PUMP TO BE CONTROLLED MANUALLY BY A REMOTE SWITCH BY ELECTRICAL CONTRACTOR. COORDINATE WITH ELECTRICAL MANUFACTURERS: WEIL, AURORA, OR HYDROMATIC. INSTALL PER MANUFACTURER'S INSTRUCTIONS OR APPROVED EQUAL.

SP-2
TYPE: SUMP PUMP (WEIGH SCALE):
CONTRACTOR SHALL FURNISH AND INSTALL EXPLOSION-PROOF SUBMERSIBLE SUMP. PUMPS SHALL BE ABLE TO HANDLE FLAMMABLE LIQUIDS, CHEMICALS, AND HAZARDOUS MATERIALS. SP-2 DESIGNED TO DELIVER 50 GPM AT 20FT. OF PRESSURE HEAD AND CAPABLE OF BEING OPERATED FOR LONG PERIODS WITHOUT DAMAGE TO MOTOR AND /OR SEALS. PUMP SHALL BE EXPLOSION PROOF, CORROSION RESISTANT, 316 STAINLESS STEEL, FM-APPROVED EXPLOSION PROOF MOTOR, NFPA(70), CAST 316 STAINLESS STEEL. AUTOMATIC DISCHARGE PIPE MOUNTED MECHANICAL FLOAT SWITCH. THE MOTOR SHALL BE VERTICAL, NEMA-10, 3/4HP, 115V/1PH/60HZ, AND SHALL OPERATE AT 1750 RPM. MINIMUM 15 FEET UL LISTED POWER CORD. PUMP TO BE CONTROLLED MANUALLY BY A REMOTE SWITCH BY ELECTRICAL CONTRACTOR. COORDINATE WITH ELECTRICAL MANUFACTURERS: WEIL, AURORA, OR HYDROMATIC. INSTALL PER MANUFACTURER'S INSTRUCTIONS OR APPROVED EQUAL.

EWS-1
TYPE: EYE WASH/FACE/SHOWER (INDOOR) (BARRIER FREE):
FIXTURE: EMERGENCY COMBINATION DRENCH SHOWER AND EYE/FACE WASH UNIT - BRADLEY MODEL S193140B2DEAA00 - WATER SUPPLY 1-1/4" & SHOWER HEAD AND EYE/FACE WASH HEADS. PROVIDE WITH WATER FLOW SWITCH ALARM AND AUDIO/VISUAL ALARM SYSTEMS. PROVIDE 120V/1PH/60HZ ALARM SYSTEM. INSTALL PER MANUFACTURERS INSTRUCTIONS OR APPROVED EQUAL.

TD-1
TYPE: TRENCH DRAIN:
FIXTURE: ZURN MODEL Z886-RFSC (36' LENGTH) 6-1/4" HEAVY DUTY WIDE REVEAL TRENCH DRAIN SYSTEM. HIGH DENSITY POLYETHYLENE (HDPE). PROVIDE REINFORCED SLOTTED STAINLESS STEEL GRATE - CLASS C. TRENCH DRAIN GRATE SHALL BE ADA COMPLIANT. TRENCH DRAIN WILL NEED TO BE CUT TO SIZE. INSTALL PER MANUFACTURER'S INSTRUCTIONS.

FD-1
TYPE: FLOOR DRAIN
HEAVY DUTY CAST IRON BODY, ADJUSTABLE 5" NICKEL BRONZE STRAINER, NO-HUB OUTLET, ROUND TOP, WITH P-TRAP AND TRAP PRIMER TAP
MFG: JAY R SMITH MODEL 2005 SERIES OR APPROVED EQUAL

FD-2
TYPE: FLOOR DRAIN
CAST IRON BODY, ADJUSTABLE 5" NICKEL BRONZE STRAINER, NO-HUB OUTLET, ROUND TOP, WITH P-TRAP AND TRAP PRIMER TAP
MFG: WATTS MODEL FD-100K SERIES OR APPROVED EQUAL

FCO
TYPE: SURFACE CLEANOUT (HEAVY DUTY BASE AND COVER)
CAST IRON BODY, ADJUSTABLE 5-3/4" NICKEL BRONZE TOP AND TRAFFIC RATED, CLEANOUT TO BE INSTALLED IN 12" CONCRETE SLAB.
MFG: JAY R SMITH MODEL 4220 SERIES OR APPROVED EQUAL

SCO / DCO
TYPE: SURFACE CLEANOUT (HEAVY DUTY BASE AND COVER)
DUCO CAST IRON BODY, DOUBLE FLANGED FOR CONCRETE SURFACES AND HEAVY DUTY TRAFFIC RATED, CLEANOUT TO BE INSTALLED IN 12" CONCRETE SLAB.
MFG: JAY R SMITH MODEL 4250 SERIES OR APPROVED EQUAL

RD-1 / OFD-1
DS-1
TYPE: ROOF DRAINS & OVERFLOW DRAINS WITH DOWNSPOUT NOZZLE:
FIXTURE: ROOF DRAIN JR SMITH 1010Y AND OVERFLOW DRAIN JR SMITH 1070Y NO-HUB OUTLET - DOWNSPOUT NOZZLE JR SMITH 1770-OT. FLASHING CLAMP AND GRAVEL STOP W/ CAST IRON DOME. PROVIDE EXPANSION JOINTS ON VERTICAL LEADERS. PROVIDE ADAPTER FROM CI PIPE TO THREADED DOWNSPOUT. SEE PLAN FOR SIZES AND REFER TO ARCHITECT FOR TERMINATION DETAILS AND ELEVATIONS WHICH VARY BY LOCATION. PROVIDE DOWNSPOUTS ON OVERFLOW DRAIN LEADER ONLY. PROVIDE VANDAL-PROOF SCREWS ONLY. ROOF DRAIN & OVERFLOW DRAIN FIXTURES SHALL MEET CODE SECTION 1105.1 AND DIAMETER OF STRAINER SHALL BE A MIN OF 1.5 x PIPE SIZE. INSTALL PER MANUFACTURER'S INSTRUCTIONS OR APPROVED EQUAL.

WH-1
TYPE: WALL HYDRANT EXTERIOR WALL MOUNTED FAUCET, LOOSE KEY OPERATION, ANTI-SIPHON, AND VACUUM BREAKER. MOUNT 18" A.F.G. 3/4" INLET, LOCK BOX, NON-REMOVABLE VACUUM BREAKER, LOOSE METAL KEY OPERATOR. COORDINATE WITH ARCHITECT FOR FINISH OF HOSE BIBB BOX AND INSTALLATION. INSTALL PER MANUFACTURERS INSTRUCTIONS OR APPROVED EQUAL.
MFG: WOODFORD MODEL B65 (CH) INSTALL PER MANUFACTURERS INSTRUCTIONS OR APPROVED EQUAL.

SA-1
TYPE: SHOCK ABSORBER
MFG: BARREL TYPE OF "K" HARD DRAWN COPPER WITH BRASS CAP. REFER TO MANUFACTURER LITERATURE FOR SIZING.
PRECISION PLUMBING PRODUCTS SC-SERIES OR INSTALL PER MANUFACTURERS INSTRUCTIONS OR APPROVED EQUAL.

HB-1
TYPE: HOSE BIBB (ROOF BIBB)
MFG: 3/4" INLET, NON REMOVABLE VACUUM BREAKER, CAST IRON WOODFORD MODEL # RHY1-MS
INSTALL PER MANUFACTURERS INSTRUCTIONS OR APPROVED EQUAL.

IWH-1
TYPE: INSTANTANEOUS WATER HEATER
MFG: ELECTRIC, UL LISTED - EEMAX MODEL SPEX48T- 240V/1PH/4.8KW. PROVIDE HW LINE WITH THERMOSTATIC MIXING VALVE. WATER TEMPERATURE SHALL BE SET AND LOCKED PER 2018 IPC CODE. INSTALL PER MANUFACTURER'S INSTRUCTIONS OR APPROVED EQUAL.

CP-1,2,3
TYPE: CONDENSATE PUMP
MFG: THE CONDENSATE PUMP KIT SHALL BE MANUFACTURED BY LITTLE GIANT, MODEL EC-1K-DV AS THE BASIS OF DESIGN. THE PLUMBING CONTRACTOR SHALL VERIFY CONDENSATE PUMP IS COMPARABLE TO THE EXISTING INDOOR UNIT AND CONNECTIVITY TO THE INDOOR UNIT POWER. PUMP KIT INCLUDES PUMP, RESERVOIR, LINE-SET DUCTS, POWER CORD AND DRAIN TUBES. THE PUMP, WIRING, DRAIN LIES, ETC SHALL BE CONCEALED WITHIN THE LINE SET DUCTS PROVIDED IN THE KIT. PUMP IS POWERED FROM THE TERMINAL BLOCK OF THE WALL MOUNTED UNIT. DO NOT PROVIDE PUMP THAT NEEDS EXTERNAL POWER. INSTALL PER MANUFACTURER'S INSTRUCTIONS OR APPROVED EQUAL.

CP-4
TYPE: CONDENSATE PUMP
MFG: THE CONDENSATE PUMP SHALL BE MANUFACTURED BY LITTLE GIANT, MODEL VCMA-20OUL-PRO AS THE BASIS OF DESIGN WITH NO SUBSTITUTION ALLOWED. THE PLUMBING CONTRACTOR SHALL VERIFY CONDENSATE PUMP IS COMPARABLE TO THE EXISTING GROUND MOUNTED OUTDOOR UNIT AND CONNECTIVITY TO THE UNIT POWER. INSTALL PER MANUFACTURER'S INSTRUCTIONS OR APPROVED EQUAL. CONTRACTOR SHALL PROVIDE AN AMERICAN HYDRO SYSTEMS PUMP HAUS PROTECTIVE PUMP COVER (OR EQUAL) IF PUMP CANNOT BE INSTALLED INSIDE HVAC UNIT OR OUT OF DIRECT EXPOSURE TO WEATHER.

AIR COMPRESSOR SCHEDULE

AC-1
TYPE: AIR COMPRESSOR (150 PSIG SYSTEM)
RECIPROCATING COMPRESSOR SYSTEM, 80GAL. VERTICAL TANK, 100% CAST IRON, SPLASH LUBRICATED, TWO - STAGE DESIGN. SYSTEM DELIVERS 17 CFM @ 175PSI, 5HP, 208V, 3PH.
AIR COMPRESSOR SYSTEM SHALL BE PROVIDED WITH AN AIR REGULATOR PRESSURE GAUGE, FILTER, CRANKCASE HEATER, AND DRYER SYSTEMS. PROVIDE AUTOMATIC DRAIN VALVE.
MFG: CHAMPION MODEL VR5-8 (ADVANTAGE SERIES) OR APPROVED EQUAL.

HR-1
TYPE: HOSE REEL
SPRING RETRACTABLE, WALL MOUNTED, STEEL CONSTRUCTION, REEL WITH 50FT LONG 1/2" HOSE CAPABLE OF 300PSI, PROVIDE WITH 180-DEGREE UNIVERSAL SWING BRACKET (#600626)
MFG: REELCRAFT INDUSTRIES MODEL A5850 OR APPROVED EQUAL.

REDUCED PRESSURE ZONE BACKFLOW

RPZ1
TYPE: REDUCED PRESSURE ZONE BACKFLOW
REDUCED PRESSURE ZONE ASSEMBLY, DOUBLE CHECK VALVES, QUARTER-TURN BALL VALVES, AIR GAP FITTING AND BRONZE Y-STRAINER WITH S.O.V.
MFG: WATTS # 1 1/4"-009-QT-S-FS OR APPROVED EQUAL.

COMPRESSED AIR PIPING INSPECTIONS

REQUIRED INSPECTIONS: THE BUILDING OFFICIAL SHALL MAKE THE FOLLOWING INSPECTIONS AND SHALL EITHER APPROVE THAT PORTION OF THE WORK AS COMPLETED, OR SHALL NOTIFY THE PERMIT HOLDER WHEREIN THE SAME FAILS TO COMPLY WITH THIS CODE. ROUGH PIPING INSPECTION: THIS INSPECTION SHALL BE MADE AFTER ALL PROCESS PIPING AUTHORIZED BY THE PERMIT HAS BEEN INSTALLED, AND BEFORE ANY SUCH PIPING HAS BEEN COVERED OR CONCEALED. THIS INSPECTION SHALL INCLUDE A DETERMINATION THAT THE PIPING SIZE, MATERIAL, AND INSTALLATION MEET THE REQUIREMENTS OF THIS CODE. FINAL PIPING INSPECTION: THIS INSPECTION SHALL BE MADE AFTER ALL PIPING AUTHORIZED BY THE PERMIT HAS BEEN INSTALLED AND AFTER ALL PORTIONS THEREOF WHICH ARE TO BE COVERED OR CONCEALED ARE SO CONCEALED. THIS INSPECTION SHALL INCLUDE A PRESSURE TEST, AT WHICH TIME THE PIPING SHALL STAND A PRESSURE OF 375 PSI (THAN TWO AND ONE-HALF TIMES THE MAXIMUM DESIGNED OPERATING PRESSURE OF 150 PSIG). TEST PRESSURES SHALL BE HELD FOR A LENGTH OF TIME SATISFACTORY TO THE BUILDING OFFICIAL, BUT IN NO CASE LESS THAN 30 MINUTES WITH NO PERCEPTIBLE DROP IN PRESSURE. TESTS SHALL BE MADE IN THE PRESENCE OF THE BUILDING OFFICIAL. NECESSARY APPARATUS FOR CONDUCTING TESTS SHALL BE FURNISHED BY THE PERMIT HOLDER.

COMPRESSED AIR SPECIFICATIONS

ALL COMPRESSED AIR PIPING TO BE TYPE K COPPER W/ COPPER FITTINGS. SOLDER ALL JOINTS WITH 95-5 TIN-ANTIMONY SOLDER. OPERATING PRESSURE TO BE 150 PSI. PRESSURE SHALL NOT DROP BELOW 100 PSI AT THE FURTHEST STATION FROM THE COMPRESSOR. PROVIDE A PRESSURE TEST BEFORE RUNNING SYSTEM IN NORMAL OPERATION. THE COMPRESSED AIR PIPING SHALL STAND A PRESSURE OF NOT LESS THAN 375 PSI (2.5 TIMES THE MAXIMUM DESIGNED OPERATING PRESSURE). THIS PRESSURE SHALL BE HELD FOR NO LESS THAN 30 MINUTES WITH NO PERCEIVABLE DROP IN PRESSURE.

WATER CALCULATIONS (FVFU) PLUMBING FIXTURES

PLUMBING FIXTURE SCHEDULE PER APPENDIX "E"

FIXTURES	PIPE SIZE				QTY.	FIXTURE		TOTAL	
	CW	HW	SW	SV		WSFU	SFU	WSFU	SFU
L	1/2"	1/2"	2	2	1	2	1	2	1
HB	3/4"	-	-	-	9	5	-	45	-
FD	-	-	2	2	2	-	2	-	4
FS	-	-	2	2	1	-	2	-	2
TD	-	-	2	2	2	-	2	-	2
DF	1/2"	-	2	2	2	0.25	0.5	.5	1
EWS	1-1/2	3/4"	-	-	1	-	-	-	-
						TOTALS		47.5	10

BUILDING CONDITIONS

ITEM (FLUSH VALVE FIXTURE UNITS)	ID	VALUE	UNIT
FIXTURE UNIT REQUIREMENTS			
BUILDING FIXTURES	FU1	47	WSFU
ALLOWED FUTURE FIXTURES	FU2	3	WSFU
TOTAL FIXTURES	FUT	50	WSFU
GPM REQUIREMENTS			
TOTAL FIXTURES TO GPM	GPM	30	GPM
-	GPM	0	GPM
TOTAL GPM	GPMT	30	GPM
SERVICE/ SUPPLY LINES			
BUILDING SUPPLY LINE FROM BUILDING RISER TO FURTHEST FIXTURE IN BUILDING	L1	300	FEET
LINE & FLOW EQUIPMENT SIZES			
SERVICE LINE	PSI1	1 1/2"	INCHES
BACKFLOW PREVENTER SIZE	PSI3	1 1/2"	INCHES
BUILDING SUPPLY PIPE SIZE	PSI4	1 1/2"	INCHES
PRESSURE REQUIREMENTS			
MAIN PRESSURE IN FROM STREET	P1	60	PSI
RFBP LOSS	P3	8	PSI
ELEVATION HEAD (MAX FIXTURE 18' x .43 PSI/FT)	P4	8	PSI
REQUIRED RESIDUAL (FLUSH VALVE)	P5	15	PSI
MAX FL = P1-(P3+…+P5)	PFL	29	PSI
FRICTION LOSS/100'= PFL*100/L1	DP1	9.6	PSI/100'
MAXIMUM VELOCITY	V1	8	FPS

NOTE: CONTRACTOR SHALL OBTAIN CITY WATER PRESSURE TEST AND VERIFY SITE PRESSURE EXCEEDS 60 PSI PRIOR TO CONSTRUCTION. CONTACT ENGINEER IN WRITING IF REPORTED PRESSURE IS LESS THAN 60 PSI PRIOR TO CONSTRUCTION. IF PRESSURE IS GREATER THAN 80 PSI, CONTRACTOR SHALL PROVIDE PRESSURE REDUCER ASSEMBLIES.

PROCESS WATER REQUIREMENT

PROCESS WATER SYSTEM IS A NON-POTABLE WATER SYSTEM. THE PROCESS WATER SYSTEM SHALL BE INSTALLED PER 2018 IPC SECTION 608. PROCESS WATER SYSTEM SHALL BE PROTECTED WITH BACKFLOW PREVENTERS PER TABLE 608.1. ALL PROCESS WATER PIPES SHALL BE LABELED AND PAINTED PURPLE. PROVIDE SIGNAGE AT EQUIPMENT. IDENTIFY WITH LABELS 'NON-POTABLE PROCESS WATER' PER CODE.

WATER PIPING SIZING

PIPE SIZING: 9 PSI LOSS PER 100 FEET

PIPE SIZES	GPM	FU (TANK)	FU (FI VALVE)
1/2"	2	1	-
3/4"	8	10	-
1"	18	26	-
1-1/4"	28	49	-
1-1/2"	45	107	-

APPLIED ENGINEERING
2800 S. RURAL RD. SUITE 101
TEMPE, AZ 85282 (480)968 3070
JOB NUMBER 25-041

Registered Arizona Professional Engineer
CHRISTOPHER No. 29717
GREGORY PIRAINO
Date Signed Dec 30, 25
Expires 12/31/2026

Issue Date:	10 JULY 2026	
Revisions:	# Description	Date

gabor lorant architects
3326 n. 3rd avenue suite 200
phoenix, arizona 85013
tel: 602.667.9090
fax: 602.667.9133
gaborlorant.com
gla Project No.: 24102

ARIZONA DEPARTMENT OF TRANSPORTATION
PROJECT DELIVERY AND OPERATIONS DIVISION
PROJECT MANAGEMENT GROUP

SAN SIMON PORT OF ENTRY
PLUMBING SCHEDULES

ROUTE I-10
MILEPOST 383
STRUCTURE NO.

F.H.W.A Arizona Division

STATE	PROJECT NO.	FEDERAL ID NO.	SHEET NO.	TOTAL SHEETS	RECORD DRAWING
ARIZ.	010 CH 383	010-F(238)T	158	200	

LOCATION SAN SIMON PORT OF ENTRY (POE)

DWG NO. P002

TRACS NO. F0728 01C

___ OF ___

PLUMBING KEY NOTES:

1. SUMP PUMP (SP-1) AND SUMP PUMP PIT, SEE SCHEDULE P002 AND DETAIL 5/P501 FOR ADDITIONAL INFORMATION.
2. REPLACE EXISTING OLD INTERNAL CONDENSATE PUMP WITH NEW PUMP. REFER TO PLUMBING SCHEDULE FOR SPECIFICATION. CONTRACTOR TO CONTACT INDOOR UNIT MANUFACTURER'S FOR THE CORRECT INTERNAL CONDENSATE PUMP REPLACEMENT. DO NOT PROVIDED AN EXTERNAL PUMP WHICH IS NOT ACCEPTABLE.
3. CONNECT NEW 3/8" COPPER CD LINE TO NEW CONDENSATE PUMP. RISE 3/8" COPPER CD LINE UP TO CEILING AND CONNECT TO NEW CONDENSATE MAIN.
4. FIELD ROUTE NEW CONDENSATE DRAIN MAIN LINE CONCEALED IN CEILING SPACE.
5. DROP 1"CD LINE DOWN THROUGH ROOF TO EXISTING UTILITY SINK. LOCATE 1"CD LINE TERMINATION WITH 3" AIR GAP ABOVE RIM.
6. PROVIDED NEW CONDENSATE PUMP. FIELD ROUTE NEW 3/4"CD COPPER LINE ON SLAB ON GRADE AND SUPPORT WITH UNISTRUT, DUALBLOCK OR EQUAL SUPPORTS. RISE CONDENSATE DRAIN LINE IN WALL AND CONNECT TO NEW CONDENSATE DRAIN MAIN AT INTERIOR, ROUTE CONCEALED IN WALLS AND ABOVE CEILINGS.
7. 3" ROOF DRAIN LEADER. DROP ROOF DRAIN LEADER IN CHASE ALONG SOUTH BUILDING WALL. ROOF DRAIN TO TERMINATE AT 12"A.F.F. AND DRAIN INTO SIDEWALK TRENCH DRAIN. REFER TO ARCHITECTURAL PLANS FOR TENCH DRAIN DETAILS. PROVIDE A 24"Wx24"Lx2"H PAN DRAIN UNDER ROOF DRAIN WITH A 1" DRAIN TO OUTDOORS 6" A.F.F.

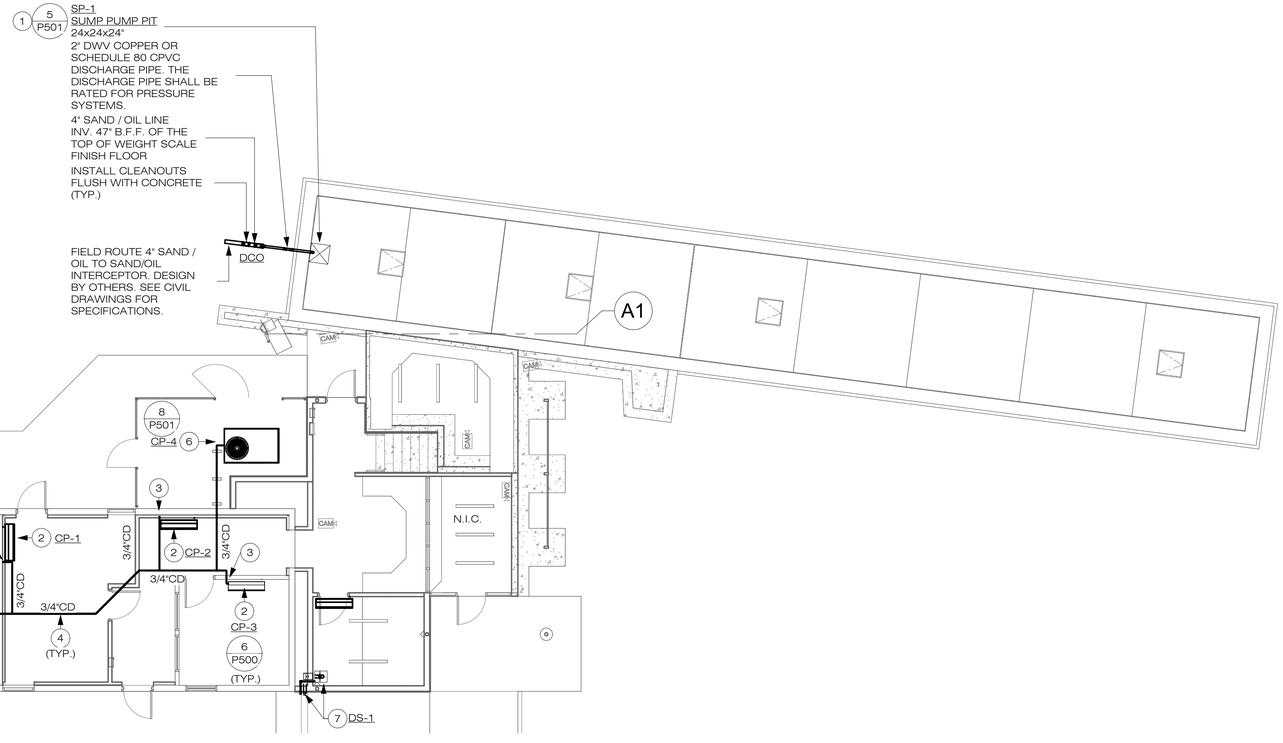

1 SANITARY WASTE FLOOR PLAN - ADMIN BUILDING & WEIGH SCALE
1/8" = 1'-0"

PLAN NORTH NORTH

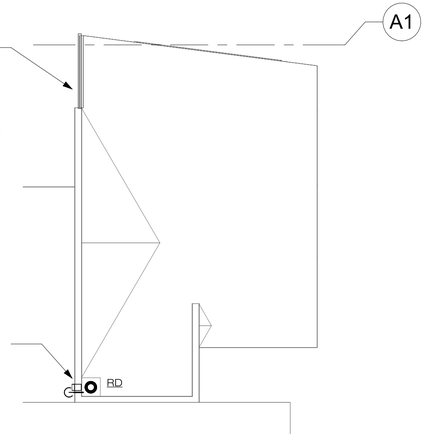

2 PLUMBING ROOF PLAN - ADMIN BUILDING
1/8" = 1'-0"

PLAN NORTH NORTH

APPLIED ENGINEERING
2800 S. RURAL RD. SUITE 101
TEMPE, AZ 85282 (480)968 3070
JOB NUMBER 25-041

Certificate No. 29717 GREGORY PIRANO Date Signed 07-31-25 Expires 12/31/2028

Issue Date:	10 JULY 2026	
Revisions:	A Description	Date

gabor lorant architects
3326 n. 3rd avenue suite 200
phoenix, arizona 85013
tel: 602.667.9090
fax: 602.667.9133
gaborlorant.com
gla Project No.: 24102

ARIZONA DEPARTMENT OF TRANSPORTATION
PROJECT DELIVERY AND OPERATIONS DIVISION
PROJECT MANAGEMENT GROUP

SAN SIMON PORT OF ENTRY
SANITARY WASTE FLOOR AND ROOF PLANS - ADMIN BUILDING & WEIGH SCALE

ROUTE I-10
MILEPOST 383
STRUCTURE NO.

F.H.W.A Arizona Division	STATE	PROJECT NO.	FEDERAL ID NO.	SHEET NO.	TOTAL SHEETS	RECORD DRAWING
	ARIZ.	010 CH 383	010-F(238)T	159	200	

LOCATION SAN SIMON PORT OF ENTRY (POE)

TRACS NO. F0728 01C

DWG NO. **P100**

___ OF ___

PLUMBING KEY NOTES:

1. FLOOR DRAIN (FD-1). SEE SCHEDULE P002 FOR ADDITIONAL INFORMATION.
2. SUMP PUMP (SP-2) AND SUMP PUMP PIT. SEE SCHEDULE P002 AND DETAIL 11/P501 FOR ADDITIONAL INFORMATION.

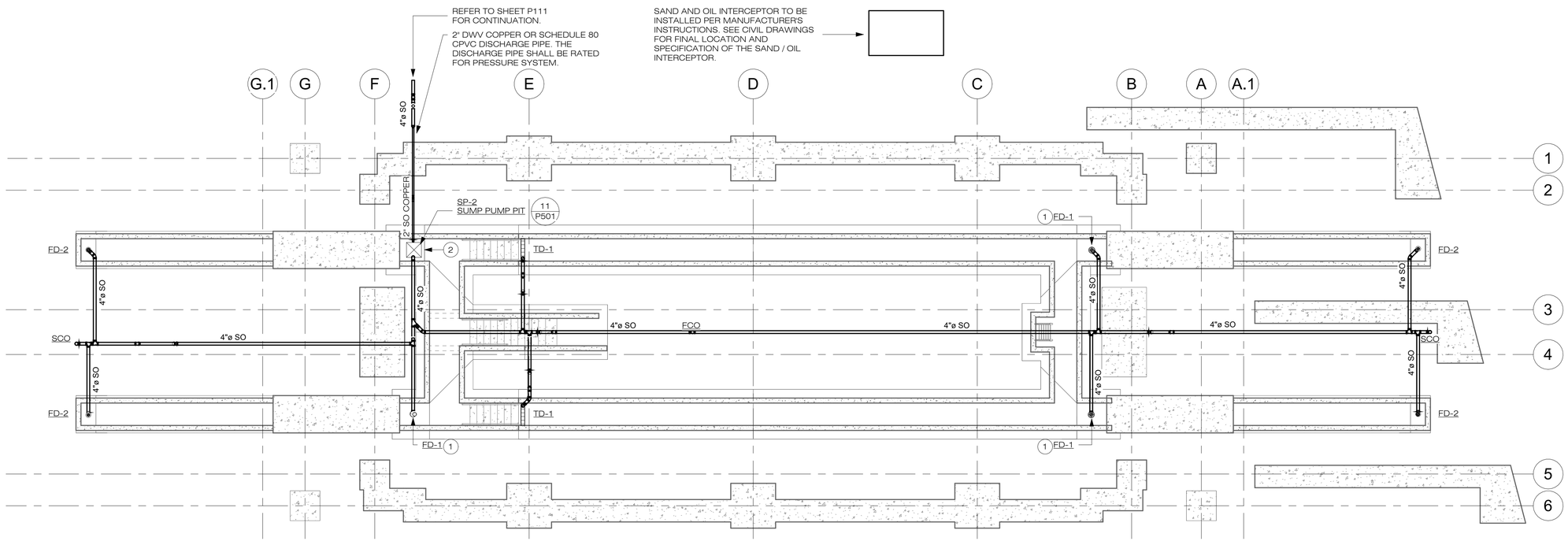

1 SANITARY WASTE FLOOR PLAN - INSPECTION BUILDING - PIT LEVEL
1/8" = 1'-0"

PLAN NORTH NORTH

APPLIED ENGINEERING
2800 S. RURAL RD. SUITE 101
TEMPE, AZ 85282 (480)968 3070
JOB NUMBER 25-041

Certificate No. 29717 GREGORY PIRAINO Civil Signed 06-30-26
Expires 12/31/2028

gabor lorant architects
3326 n. 3rd avenue suite 200
phoenix, arizona 85013
tel: 602.667.9090
fax: 602.667.9133
gaborlorant.com
gla Project No.: 24102

Issue Date:	10 JULY 2026	
Revisions:	# Description	Date

ARIZONA DEPARTMENT OF TRANSPORTATION
PROJECT DELIVERY AND OPERATIONS DIVISION
PROJECT MANAGEMENT GROUP

SAN SIMON PORT OF ENTRY
SANITARY WASTE FLOOR PLAN - INSPECTION BUILDING - PIT LEVEL

ROUTE	MILEPOST	STRUCTURE NO.
I-10	383	

F.H.W.A Arizona Division	STATE	PROJECT NO.	FEDERAL ID NO.	SHEET NO.	TOTAL SHEETS	RECORD DRAWING
	ARIZ.	010 CH 383	010-F(238)T	160	200	

LOCATION SAN SIMON PORT OF ENTRY (POE)

TRACS NO. F0728 01C

DWG NO. **P110**

___ OF ___

PLUMBING KEY NOTES:

1. 4" ROOF DRAIN AND 4" OVERFLOW DRAIN. DROP THROUGH ROOF, SLOPE PIPE 1/8" PER 12", ROUTE TIGHT AGAINST ROOF TO DROP INSIDE SOUTH WALL.
2. DROP 1" OFD LINE IN WALL FROM EVAPORATIVE COOLER AND FIELD ROUTE TO LANDSCAPE.
3. CLEANOUTS AND BACKWATER VALVES SHALL BE INSTALLED WITH HEAVY DUTY BASE AND COVER. CLEAN OUTS SHALL BE INSTALLED IN THE LANDSCAPE AREA. (TYPICAL)
4. RISE VENT LINE UP THROUGH ROOF. LOCATE 10' MIN. AWAY FROM ANY AIR INTAKE. (TYPICAL)
5. DO NOT ROUTE WATER, SANITARY WASTE, CONDENSATE DRAIN, OR ROOF DRAIN LINES OVER ELECTRICAL ROOMS, ELECTRICAL PANELS, MDF ROOMS, SERVER ROOMS, OR CRITICAL COMMUNICATION ROOMS. (TYPICAL)
6. THE DOMESTIC WATER LINE UNDERGROUND SHALL BE 5' MIN AWAY FROM SANITARY WASTE MAIN LINES.
7. MECHANICAL EQUIPMENT - REFER TO MECHANICAL PLAN FOR FINAL LOCATION AND SPECIFICATIONS.
8. COORDINATE WITH STRUCTURAL ENGINEER FOR ROUTING OF WASTE LINES UNDER WALL FOOTING OR WASTE LINE PENETRATING STEM WALLS. REFER TO STRUCTURAL DRAWINGS FOR DETAILS AND PIPE INSTALLATION INSTRUCTIONS. (TYPICAL)
9. DO NOT ROUTE WASTE PIPING UNDER COLUMN FOOTING. REFER TO STRUCTURAL DRAWINGS FOR LOCATION, DETAILS, AND PIPE INSTALLATION INSTRUCTIONS. RELOCATE LINES AS NEEDED OR ROUTE WASTE LINES AROUND FOOTERS USING 45-DEGREE FITTINGS. FIELD ADJUST PIPE LOCATIONS AWAY FROM FOUNDATIONS. (TYPICAL)
10. PROVIDE U.L. APPROVED PIPE PENETRATIONS AT FIRE/SMOKE PARTITIONS (TYP. ALL). REFER TO ARCHITECTURAL PLANS FOR UL DETAILS AND LOCATIONS OF FIRE AND SMOKE PARTITIONS.
11. 6" ROOF DRAIN AND 6" OVERFLOW DRAIN LEADERS. DROP ROOF DRAIN LEADER ALONG SOUTH BUILDING WALL. ROOF DRAIN TO TERMINATE BELOW GRADE PER PLANS. TERMINATE OVERFLOW DRAIN AT 16" A.F.F. PER PLANS.
12. FLOOR CLEANOUT (SCO) SHALL BE INSTALLED AWAY FROM THE PIT DRIVEWAY TO PREVENT VEHICLE WHEELS FROM RUNNING OVER THE FLOOR CLEANOUT. CLEANOUT SHALL BE TRAFFIC RATED HEAVY DUTY RATED.
13. DO NOT ROUTE WATER, SANITARY WASTE, CONDENSATE DRAIN, AND ROOF DRAIN LINES OVER ELECTRICAL ROOMS, ELECTRICAL PANELS, MDF ROOMS, SERVER ROOMS, OR CRITICAL COMMUNICATION ROOMS. (TYPICAL)

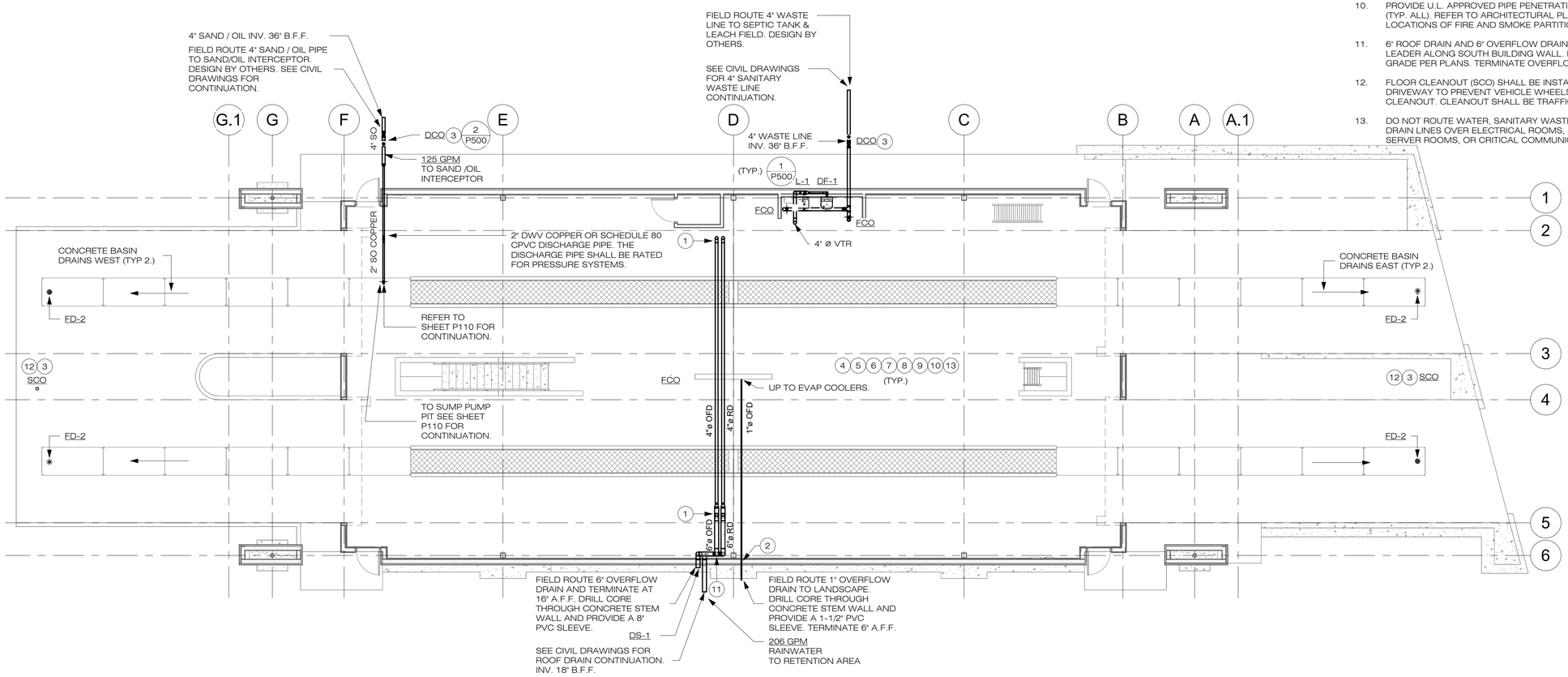

1 SANITARY WASTE FLOOR PLAN - INSPECTION BUILDING
1/8" = 1'-0"

PLAN NORTH NORTH

APPLIED ENGINEERING
2800 S. RURAL RD. SUITE 101
TEMPE, AZ 85282 (480)968 3070
JOB NUMBER 25-041

Certificate No. 29717 GREGORY PIRAINO Date Signed 08-20-26
Expires 12/31/2028

Issue Date: 10 JULY 2026
Revisions: # Description Date

gabor lorant architects
3326 n. 3rd avenue suite 200
phoenix, arizona 85013
tel: 602.667.9090
fax: 602.667.9133
gaborlorant.com
gla Project No.: 24102
gla

ARIZONA DEPARTMENT OF TRANSPORTATION
PROJECT DELIVERY AND OPERATIONS DIVISION
PROJECT MANAGEMENT GROUP

SAN SIMON PORT OF ENTRY
SANITARY WASTE FLOOR PLAN - INSPECTION BUILDING

ROUTE	STATE	PROJECT NO.	FEDERAL ID NO.	SHEET NO.	TOTAL SHEETS	RECORD DRAWING
I-10	ARIZ.	010 CH 383	010-F(238)T	161	200	
MILEPOST 383						
STRUCTURE NO.						

F.H.W.A Arizona Division

LOCATION SAN SIMON PORT OF ENTRY (POE)

TRACS NO. F0728 01C

DWG NO. **P111**

___ OF ___

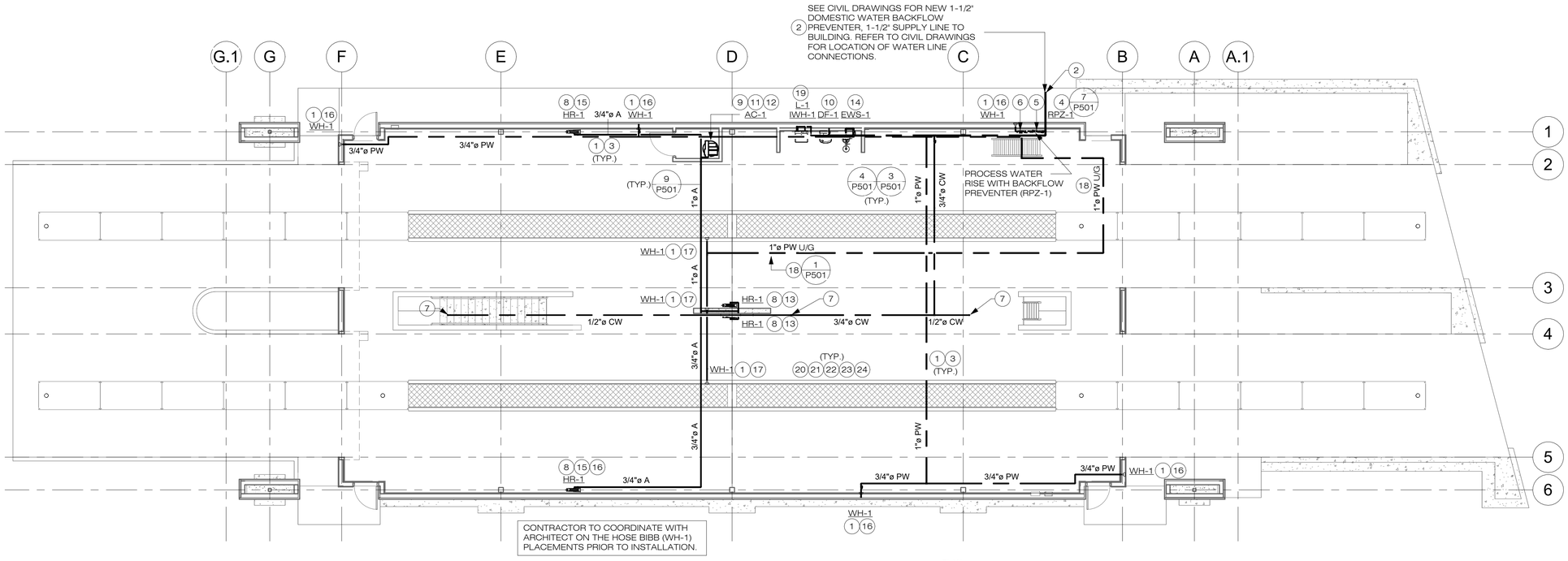

1 DOMESTIC WATER FLOOR PLAN - INSPECTION BUILDING
1/8" = 1'-0"

PLUMBING KEY NOTES:

1. PROVIDE PROCESS WATER (NON-POTABLE) SIGNAGE AND LABELING AT WH-1 PER 2018 IPC 1301.3.2.
2. SEE CIVIL DRAWINGS FOR NEW 1-1/2" DOMESTIC WATER BACKFLOW PREVENTER, 1-1/2" SUPPLY LINE TO BUILDING. REFER TO CIVIL DRAWINGS FOR LOCATION OF WATER LINE CONNECTIONS.
3. DOMESTIC WATER PIPE (CW) AND PROCESS WATER (PW) TO BE ROUTED TIGHT TO BOTTOM OF ROOF AND MATCH THE SLOPE OF THE ROOF.
4. DROP 1-1/4"CW LINE IN WALL WITH S.O.V. WITH BACKFLOW PREVENTER FOR THE PROCESS WATER. MOUNT BACKFLOW PREVENTER ON WALL. COORDINATE WITH ARCHITECT AND OWNER REPRESENTATIVE FOR FINAL LOCATION OF BACKFLOW PREVENTER. BACKFLOW PREVENTER SHALL BE PROVIDED WITH FUNNEL AND 1" DRAIN WHICH SHALL BE ROUTED TO OUTDOORS WITH 6" A.F.F. REFER TO RPZ-1 SCHEDULE ON SHEET P002 AND DETAIL 7/P501 FOR ADDITIONAL INFORMATION.
5. 1-1/2"CW DOMESTIC COLD WATER RISE UP ALONG INSIDE (INDOOR) FACE WALL.
6. 1-1/4"PW PROCESS WATER. RISE UP ALONG INSIDE (INDOOR) FACE WALL, CONNECT TO RPZ-1 ON WEST SIDE AND PROVIDE TWO ISOLATION SHUTOFF VALVES: ONE ON THE RISER TO RPZ-1 AND ONE ON THE DOWNSTREAM SIDE SUPPLYING THE WH'S.
7. DOMESTIC COLD WATER SUPPLY. RISE 1/2"CW LINE WITH S.O.V. TO EVAPORATIVE COOLERS, SEE P310 FOR CONTINUATION.
8. AIR HOSE REELS, REFER TO HR-1 SCHEDULE ON SHEET P002, AND DETAIL 9/P501 FOR ADDITIONAL INFORMATION.
9. AIR COMPRESSOR AC1. SUPPLY TO HOSE REELS, SEE SCHEDULE P002, 9/P501, AND 10/P501 FOR ADDITIONAL INFORMATION.
10. DROP 1/2"CW LINE IN WALL WITH S.O.V.'S. TO DRINKING FOUNTAIN.
11. INSTALL AIR COMPRESSOR PER MANUFACTURER'S INSTRUCTIONS. REFER TO PLUMBING SPECIFICATIONS AND SCHEDULES FOR ADDITIONAL INFORMATION.
12. FIELD ROUTE 3/4" DRAIN LINES FROM AIR COMPRESSOR TO LANDSCAPE WITH 6" A.F.G.
13. DROP 1" AIR LINE DOWN TO AIR REELS. STUB 3/4" AIR LINE WITH S.O.V. TO EACH REEL. RUN AIR LINE HIGH OVERHEAD. PROVIDE QUICK DISCONNECTS AS INDICATED ON PLANS. PROVIDE QUICK DISCONNECTS @ 48" A.F.F. COORDINATE WITH ARCHITECT AND OWNER FOR FINAL LOCATION.
14. DROP 1-1/2"CW LINE IN WALL WITH S.O.V. TO EWS-1. INSTALL PER MANUFACTURER'S INSTRUCTIONS.
15. DROP 3/4" AIR LINE DOWN TO AIR REELS. STUB 3/4" AIR LINE WITH S.O.V. RUN AIR LINE HIGH OVERHEAD. PROVIDE QUICK DISCONNECT AS INDICATED ON PLANS. PROVIDE QUICK DISCONNECTS @ 48" A.F.F. COORDINATE WITH ARCHITECT AND OWNER FOR FINAL LOCATION.
16. HOSE BIBB (WH-1) SHALL BE INSTALLED IN THE CONCRETE STEM WALL. COORDINATE WITH ARCHITECT FOR FINAL HEIGHT AND LOCATION. (TYP.)
17. HOSE BIBB (WH-1) TO BE INSTALLED IN THE INSPECTION PIT. COORDINATE WITH ARCHITECT FOR FINAL HEIGHT AND LOCATION.
18. WATER LINES TO BE INSTALLED UNDERGROUND.
19. DROP 1/2"CW LINE IN WALL WITH S.O.V. TO LAVATORY.
20. ALL WATER, COMPRESSED AIR, CONDENSATE DRAIN, ROOF DRAIN, AND OVERFLOW DRAINS LINES SHALL BE LABELED PER 2018 PLUMBING CODES. (TYPICAL)
21. ALL WATER LINE DROPS TO EQUIPMENT SHALL BE PROVIDED WITH SHUT-OFF VALVES. LOCATE VALVES IN ACCESSIBLE LOCATIONS OR PROVIDE ACCESS PANEL. COORDINATE ALL ACCESS PANEL SIZES AND LOCATIONS WITH ARCHITECT BEFORE PLACING VALVES AND PANELS. SET ALL VALVES IN ACCESSIBLE LOCATIONS. ALL VALVES SHALL BE LABELED AND TAGGED WITH A UNIQUE ID. CONTRACTOR SHALL PROVIDE A MAP WITH VALVE LOCATIONS AND VALVE SERVICE AREAS TO OWNER FOR MAINTENANCE PURPOSES. (TYPICAL).
22. ALL WATER, CONDENSATE DRAIN, WASTE, AND VENT LINES IN CEILING SHALL BE ROUTED AS HIGH AS POSSIBLE. ALL PIPES SHALL BE ROUTED. ALL EXPOSED PIPES SHALL BE PAINTED TO MATCH THE SURROUNDING MATERIAL'S COLOR. COORDINATE WITH ARCHITECT FOR COLORS.
23. PROVIDE U.L. APPROVED PIPE PENETRATIONS AT FIRE/SMOKE PARTITIONS (TYP. ALL) REFER TO ARCHITECTURAL PLANS FOR UL DETAILS AND LOCATIONS OF FIRE AND SMOKE PARTITIONS.
24. DO NOT ROUTE WATER, SANITARY VENT, OR CONDENSATE DRAIN LINES OVER ELECTRICAL ROOMS, ELECTRICAL PANELS, OR MDF ROOMS. (TYPICAL).

PROCESS WATER REQUIREMENT

PROCESS WATER SYSTEM IS A NON-POTABLE WATER SYSTEM. THE PROCESS WATER SYSTEM SHALL BE INSTALLED PER 2018 IPC SECTION 608. PROCESS WATER SYSTEM SHALL BE PROTECTED WITH BACKFLOW PREVENTERS PER TABLE 608.1. ALL PROCESS WATER PIPES SHALL BE LABELED AND PAINTED PURPLE. PROVIDE SIGNAGE AT EQUIPMENT. IDENTIFY WITH LABELS "NON-POTABLE PROCESS WATER" PER CODE.

APPLIED ENGINEERING
2800 S. RURAL RD. SUITE 101
TEMPE, AZ 85282 (480)968 3070
JOB NUMBER 25-041

Certificate No. 29717 GREGORY PIRAINO Date Signed 06-30-26
Expires 12/31/2028

gabor lorant architects
3326 n. 3rd avenue suite 200
phoenix, arizona 85013
tel: 602.667.9090
fax: 602.667.9133
gaborlorant.com
gla Project No.: 24102

Issue Date:	10 JULY 2026	
Revisions:	# Description	Date

ARIZONA DEPARTMENT OF TRANSPORTATION
PROJECT DELIVERY AND OPERATIONS DIVISION
PROJECT MANAGEMENT GROUP

SAN SIMON PORT OF ENTRY
DOMESTIC WATER FLOOR PLAN - INSPECTION BUILDING

ROUTE	STATE	PROJECT NO.	FEDERAL ID NO.	SHEET NO.	TOTAL SHEETS	RECORD DRAWING
I-10	ARIZ.	010 CH 383	010-F(238)T	162	200	
MILEPOST 383	F.H.W.A Arizona Division					
STRUCTURE NO.	LOCATION: SAN SIMON PORT OF ENTRY (POE)				DWG NO. P210	
	TRACS NO. F0728 01C				____ OF ____	

~ PLUMBING KEY NOTES:

1. RISE VENT LINE UP THROUGH ROOF. LOCATE 10' MIN. AWAY FROM ANY AIR INTAKE.
2. MECHANICAL EQUIPMENT - REFER TO MECHANICAL PLAN FOR FINAL LOCATION.
3. 3/4"CW LINE UP TO HOSE BIBB ON THE ROOF. REFER TO HOSE BIBB DETAIL 3/P500.
4. RISE 1/2"CW LINE UP WITH S.O.V. TO EVAPORATIVE COOLER. PROVIDE S.O.V. ON ROOF FOR MAINTENANCE ACCESS.
5. PROVIDE 3/4"OFD LINE TO EACH EVAPORATIVE COOLER AND DROP THROUGH ROOF. REFER TO SHEET P111 FOR OVERFLOW DRAIN LINES CONTINUATION.
6. DROP 1" OFD LINE FROM EVAP COOLER DOWN IN WALL.

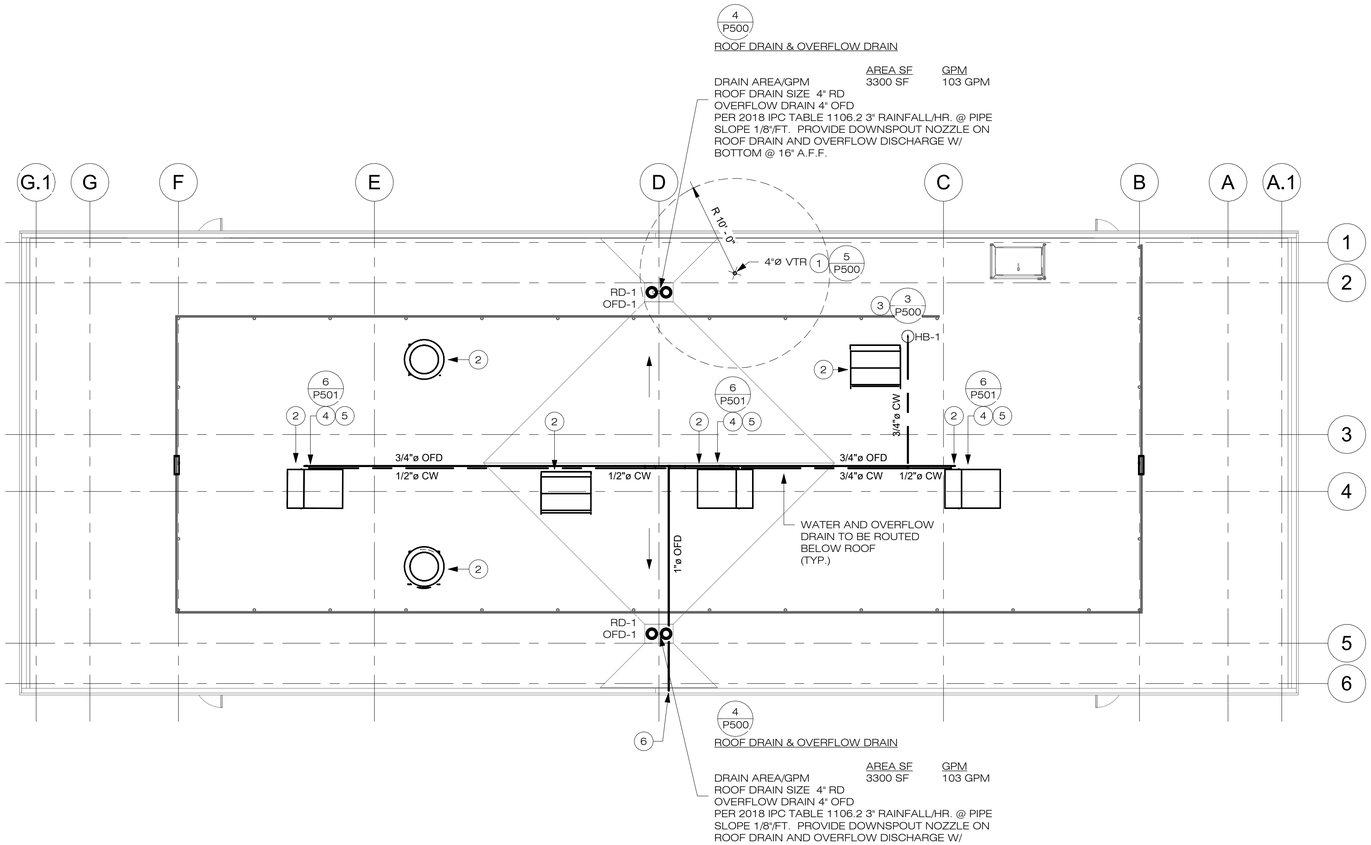

1 PLUMBING ROOF PLAN - INSPECTION BUILDING
1/8" = 1'-0"

PLAN NORTH / NORTH

APPLIED ENGINEERING
2800 S. RURAL RD. SUITE 101
TEMPE, AZ 85282 (480)968 3070
JOB NUMBER 25-041

Certificate No. 29717 GREGORY PAVANO Date Signed 06-30-26
Expires 12/31/2028

gabor lorant architects
3326 n. 3rd avenue suite 200
phoenix, arizona 85013
tel: 602.667.9090
fax: 602.667.9133
gaborlorant.com
gla Project No.: 24102

Issue Date:	10 JULY 2026	
Revisions:	# Description	Date

ARIZONA DEPARTMENT OF TRANSPORTATION
PROJECT DELIVERY AND OPERATIONS DIVISION
PROJECT MANAGEMENT GROUP

SAN SIMON PORT OF ENTRY
PLUMBING ROOF PLAN - INSPECTION BUILDING

ROUTE	MILEPOST	STRUCTURE NO.
I-10	383	

F.H.W.A Arizona Division	STATE	PROJECT NO.	FEDERAL ID NO.	SHEET NO.	TOTAL SHEETS	RECORD DRAWING
	ARIZ.	010 CH 383	010-F(238)T	163	200	

LOCATION: SAN SIMON PORT OF ENTRY (POE)

TRACS NO. F0728 01C

DWG NO. **P310**

___ OF ___

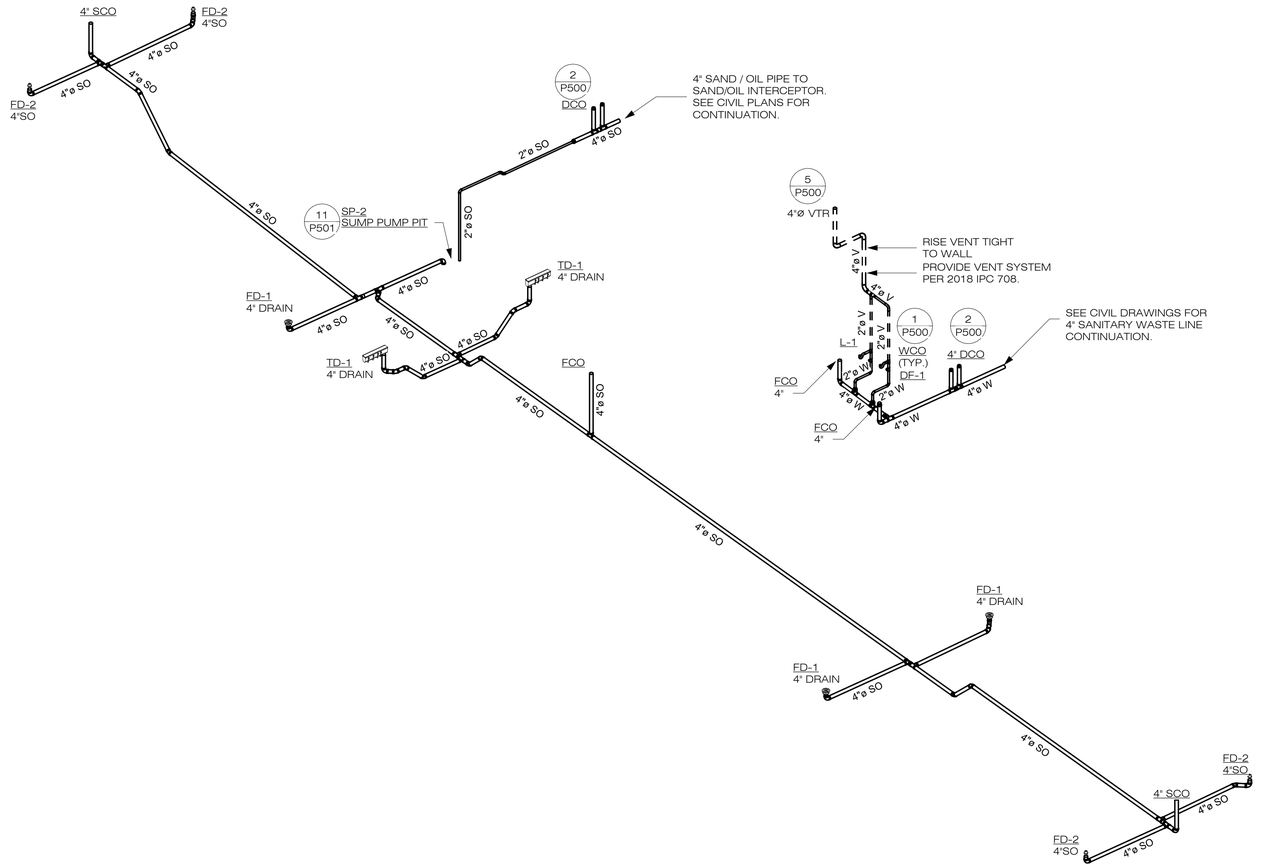

1 ISOMETRIC PLAN - SANITARY WASTE

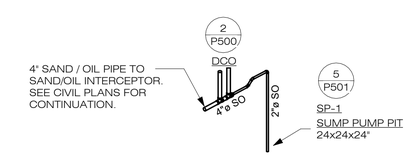

2 ISOMETRIC PLAN - WEIGH SCALE



APPLIED ENGINEERING
2800 S. RURAL RD. SUITE 101
TEMPE, AZ 85282 (480)968 3070
JOB NUMBER 25-041

Registered Professional Engineer (Mechanical)
Certificate No. 29717
GREGORY PIRAINO
Date Signed 06-30-26
Arizona, U.S.A.
Expires 12/31/2028

Issue Date:	10 JULY 2026	
Revisions:	# Description	Date

gabor lorant architects
3326 n. 3rd avenue suite 200
phoenix, arizona 85013
tel: 602.667.9090
fax: 602.667.9133
gaborlorant.com

gla Project No.: 24102

gla

ARIZONA DEPARTMENT OF TRANSPORTATION
PROJECT DELIVERY AND OPERATIONS DIVISION
PROJECT MANAGEMENT GROUP

SAN SIMON PORT OF ENTRY
ISOMETRIC PLAN - SANITARY WASTE & WEIGH SCALE

ROUTE	STATE	PROJECT NO.	FEDERAL ID NO.	SHEET NO.	TOTAL SHEETS	RECORD DRAWING
I-10	F.H.W.A Arizona Division	ARIZ.	010 CH 383	010-F(238)T	164	200

MILEPOST 383

STRUCTURE NO.

LOCATION: SAN SIMON PORT OF ENTRY (POE)

TRACS NO. F0728 01C

DWG NO. **P400**

____ OF ____

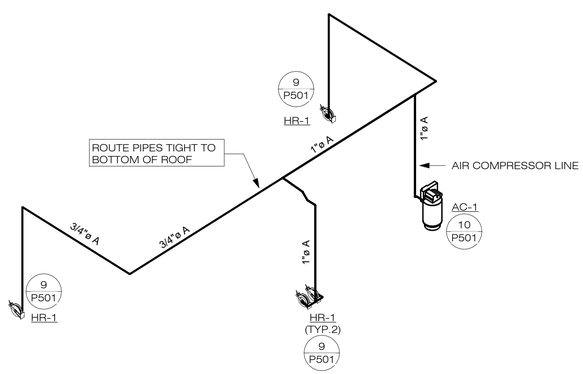

1 ISOMETRIC PLAN - COMPRESSED AIR

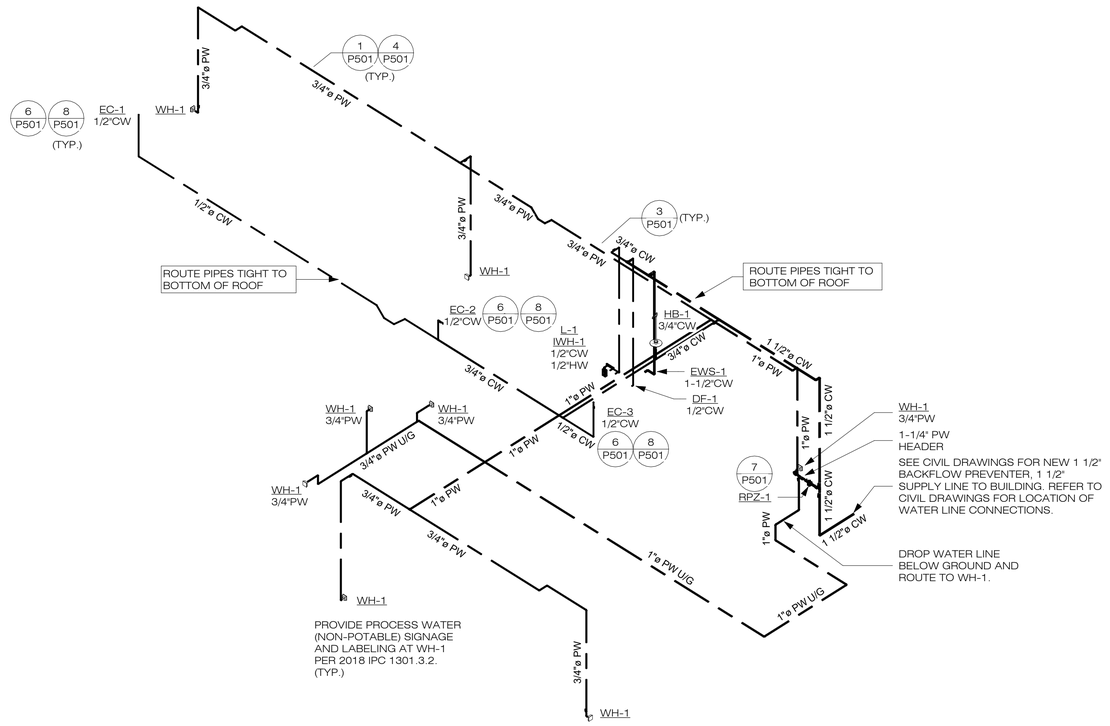

2 ISOMETRIC PLAN - DOMESTIC WATER

APPLIED ENGINEERING
2800 S. RURAL RD. SUITE 101
TEMPE, AZ 85282 (480)968 3070
JOB NUMBER 25-041

Registered Professional Engineer (Mechanical) Certificate No. 29717 GREGORY PIRANO Date Signed 06 30 26 Arizona, U.S.A. Expires 12/31/2028

Issue Date:	10 JULY 2026	
Revisions:	# Description	Date

gabor lorant architects
3326 n. 3rd avenue suite 200
phoenix, arizona 85013
tel: 602.667.9090
fax: 602.667.9133
gaborlorant.com
gla Project No.: 24102

ARIZONA DEPARTMENT OF TRANSPORTATION
PROJECT DELIVERY AND OPERATIONS DIVISION
PROJECT MANAGEMENT GROUP

SAN SIMON PORT OF ENTRY
ISOMETRIC PLAN - DOMESTIC WATER & COMPRESSED AIR

ROUTE I-10	F.H.W.A Arizona Division	STATE ARIZ.	PROJECT NO. 010 CH 383	FEDERAL ID NO. 010-F(238)T	SHEET NO. 165	TOTAL SHEETS 200	RECORD DRAWING
MILEPOST 383	LOCATION SAN SIMON PORT OF ENTRY (POE)						DWG NO. P410
STRUCTURE NO.	TRACS NO. F0728 01C						___ OF ___

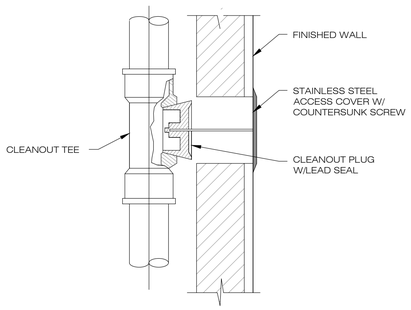

1/P500 WALL CLEANOUT DETAIL

SCALE: NONE

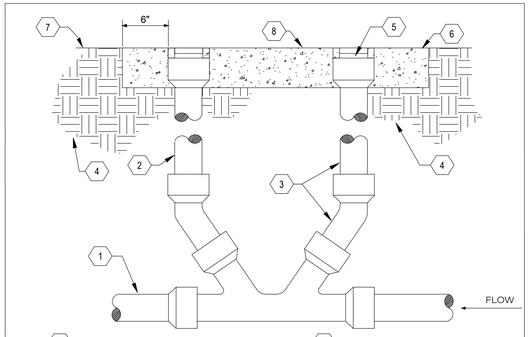

2/P500 TWO WAY CLEANOUT

SCALE: NONE

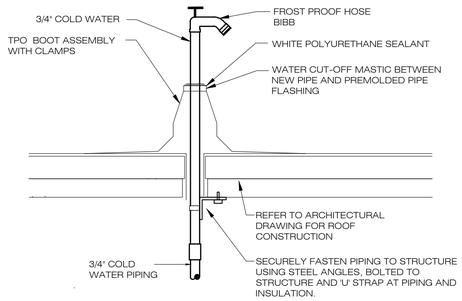

3/P500 PIPE THRU ROOF WITH HOSE BIBB DETAIL

SCALE: NONE

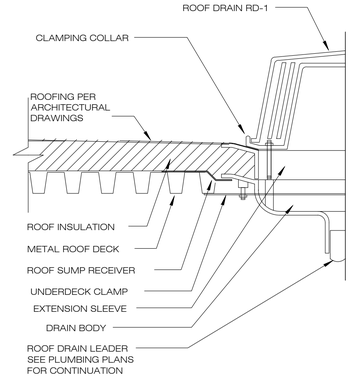

4/P500 ROOF/OVERFLOW DRAIN DETAIL

SCALE: NONE

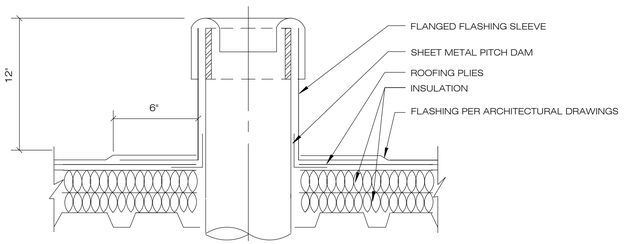

5/P500 VENT THRU ROOF PENETRATION DETAIL

SCALE: NONE

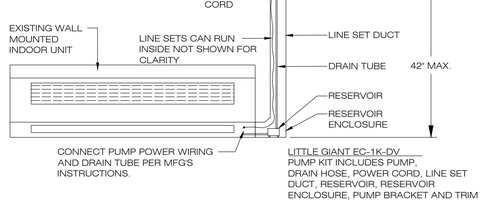

6/P500 MINI-SPLIT CONDENSATE DRAINS/PUMP

SCALE: NONE

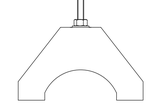

ACCESSORIES:

- PIPE CLAMP/STRAP - ORDER TO PIPE O.D.
- SUPPORT PAD OR DECK PLATE
- ETERNABOND} 2-SIDED TAPE

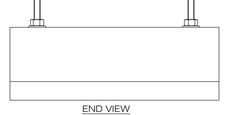

KEY INFORMATION :

- PROVIDE ROOF SUPPORT DESIGNED TO SUPPORT PIPE, CONDUIT, DUCT, CABLE TRAYS.
- MAXIMUM SPACING PER CODE AND MANUFACTURER'S INSTRUCTIONS.
- DEPENDING UPON THE LOAD. MAKE CERTAIN EACH STAND IS PROPERLY ELEVATED TO EVEN LOAD WEIGHT AT ALL STANDS.
- ALL METAL PARTS SHALL BE CORROSION RESISTANT, EITHER STAINLESS STEEL OR HOT-DIP GALVANIZED STEEL.

7/P500 CONDENSATE DRAINS LINE PIPE SUPPORTS

SCALE: NONE

APPLIED ENGINEERING
2800 S. RURAL RD. SUITE 101
TEMPE, AZ 85282 (480)968 3070
JOB NUMBER 25-041

Registered Professional Engineer Certificate No. 29717 GREGORY PIRAINO Signed Dec 30 25 Expires 12/31/2028

Issue Date:	10 JULY 2026	
Revisions:	# Description	Date

gabor lorant architects
3326 n. 3rd avenue suite 200
phoenix, arizona 85013
tel: 602.667.9090
fax: 602.667.9133
gaborlorant.com
gla Project No.: 24102

ARIZONA DEPARTMENT OF TRANSPORTATION
PROJECT DELIVERY AND OPERATIONS DIVISION
PROJECT MANAGEMENT GROUP

SAN SIMON PORT OF ENTRY
PLUMBING DETAILS

ROUTE	MILEPOST	STRUCTURE NO.
I-10	383	

F.H.W.A Arizona Division	STATE	PROJECT NO.	FEDERAL ID NO.	SHEET NO.	TOTAL SHEETS	RECORD DRAWING
	ARIZ.	010 CH 383	010-F(238)T	166	200	

LOCATION: SAN SIMON PORT OF ENTRY (POE)

DWG NO. P500

TRACS NO. F0728 01C

___ OF ___

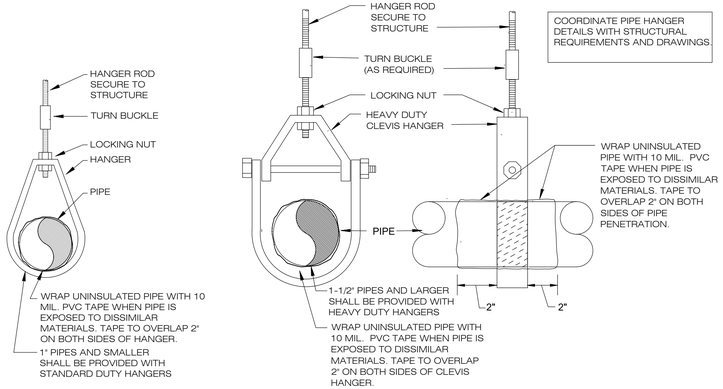

1 / P501 CLEVIS HANGER NON-INSULATED PIPE DETAIL

SCALE: NONE

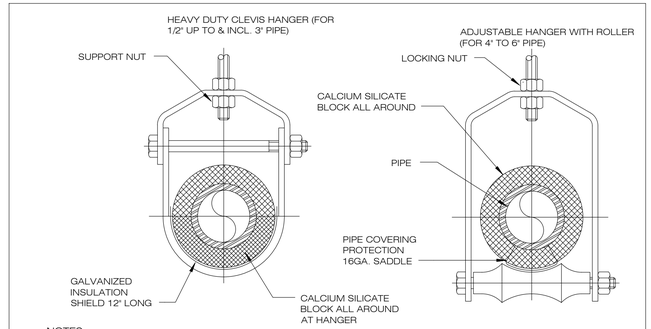

NOTES:

1. SEE SPECIFICATION FOR HANGER SIZES.
2. PIPE 8" AND LARGER SHALL HAVE ROLLER SUPPORTED WITH DUAL RODS.

NOTE: COORDINATE PIPE HANGER DETAILS WITH STRUCTURAL REQUIREMENTS AND DRAWINGS.

2 / P501 PIPE HANGER SUPPORT DETAIL

SCALE: NONE

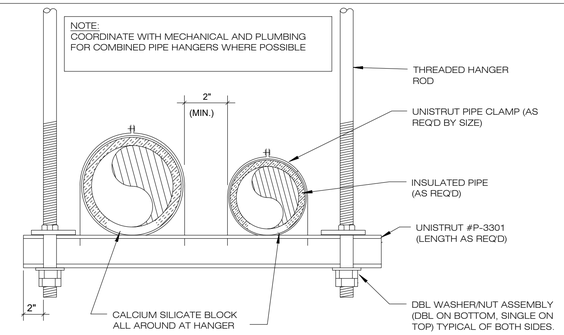

3 / P501 TRAPEZE HANGER - INSULATED PIPE DETAIL

SCALE: NONE

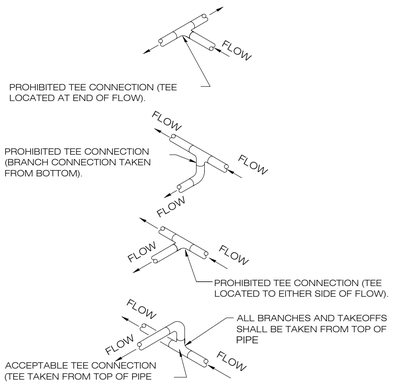

4 / P501 PIPE TEE DETAILS

SCALE: NONE

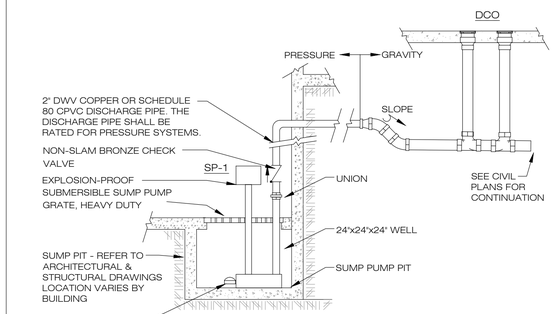

5 / P501 SUMP PUMP PIT - WEIGH SCALE

SCALE: NONE

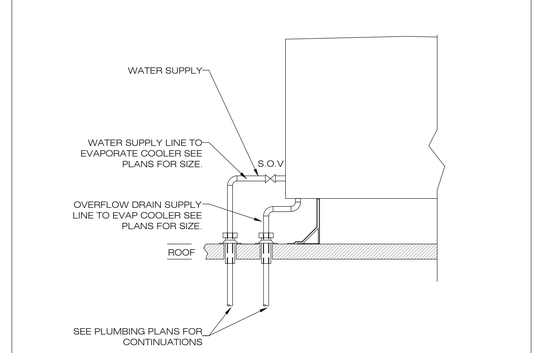

6 / P501 EVAP COOLER UNIT DETAIL

SCALE: NONE

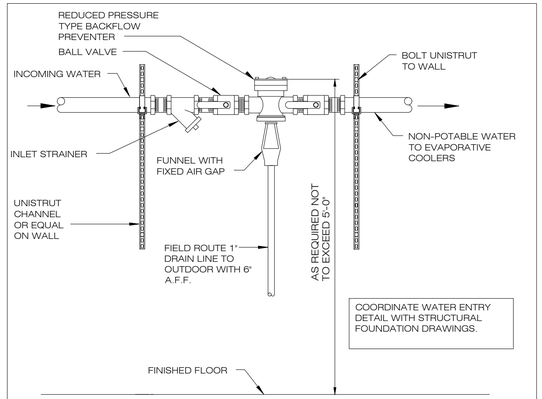

7 / P501 WALL MOUNTED RPZ DETAIL

SCALE: NONE

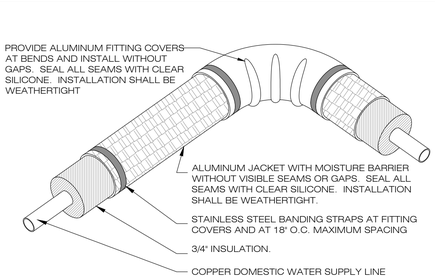

8 / P501 EXTERIOR INSULATED DOMESTIC WATER WATER LINE SUPPLY

SCALE: NONE

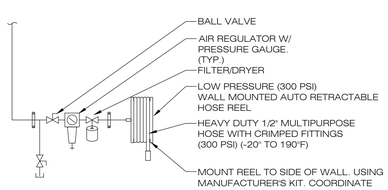

9 / P501 AIR COMPRESSOR REEL DETAIL

SCALE: NONE

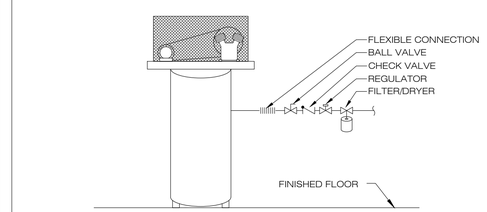

10 / P501 AIR COMPRESSOR DETAIL

SCALE: NONE

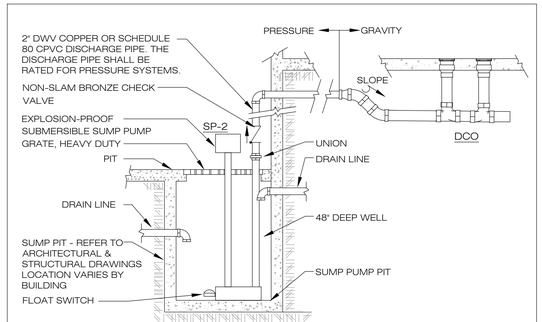

11 / P501 SUMP PUMP PIT - INSPECTION BUILDING

SCALE: NONE

APPLIED ENGINEERING
2800 S. RURAL RD. SUITE 101
TEMPE, AZ 85282 (480)968 3070
JOB NUMBER 25-041

Certificate No. 29717 GREGORY PIRAINO Date Signed Dec 31, 25 Expires 12/31/2026

Issue Date:	10 JULY 2026	
Revisions:	# Description	Date

gabor lorant architects
3326 n. 3rd avenue suite 200
phoenix, arizona 85013
tel: 602.667.9090
fax: 602.667.9133
gaborlorant.com
gla Project No.: 24102

ARIZONA DEPARTMENT OF TRANSPORTATION
PROJECT DELIVERY AND OPERATIONS DIVISION
PROJECT MANAGEMENT GROUP

SAN SIMON PORT OF ENTRY
PLUMBING DETAILS

ROUTE	MILEPOST	STRUCTURE NO.
I-10	383	

F.H.W.A Arizona Division	STATE	PROJECT NO.	FEDERAL ID NO.	SHEET NO.	TOTAL SHEETS	RECORD DRAWING
	ARIZ.	010 CH 383	010-F(238)T	167	200	

LOCATION: SAN SIMON PORT OF ENTRY (POE)

TRACS NO. F0728 01C

DWG NO. P501

___ OF ___

DO NOT SCALE DRAWINGS. DO NOT PLOT 'SCALE TO FIT'. THIS DOCUMENT IS FORMATTED FOR THE ANSI D (22"x34") SHEET SIZE.
FULL-SIZE PLOT ON ANSI D (22"x34") PAPER ONLY. HALF-SIZE PLOT ON 11"x17" PAPER ONLY.

STAPLE ZONE

Electrical Abbreviations

1P	1 Pole (2P, 3P, 4P, ETC.)	HVAC	Heating, Ventilating And Air Conditioning	T-STAT	Thermostat
A, Amp	Ampere	IC	Interrupting Capacity	FTC	Telephone Terminal Cabinet
AC	Above Counter	IG	Isolated Ground	TV	Television
ACLG	Above Ceiling	IMC	Intermediate Metal Conduit	TV	Television Terminal Cabinet
ADO	Automatic Door Opener	INCAND	Incandescent	TYP	Typical
AF	Amp Frame	IR	Infrared	UBC	Under Counter
AFF	Above Finished Floor	I/W	Interlock With	UBE	Underground Electrical
AFG	Above Finished Grade	J-BOX	Junction Box	USG	Underground
AFI	Arc Fault Circuit Interrupter	KV	Kilovolt	UH	Unit Heater
AHU	Air Handling Unit	KVA	Kilovolt-Ampere	UT	Underground Telephone
AL	Aluminum	KVAR	Kilovolt-Ampere Reactive	UNTIL	Utility
ALT	Alternate	KW	Kilowatt	UV	Ultraviolet
AMP	Ampere	KWH	Kilowatt Hour	V	Volt
AMPL	Amplifier	LOC	Locate Or Location	VA	Volt-Amperes
ANNUN	Annunciator	LT	Light	VT	Video Display Terminal
APPROX	Approximately	LTG	Lighting	AVERT	Vertical
AQ-STAT	Aquastat	LTNG	Lightning	FD	Variable Frequency Drive
ARCH	Architect, Architectural	LV	Low Voltage	VTOL	Volume
AS	Amp Switch	MAX	Maximum	NW	Watt
AT	Amp Trip	MAG.S	Magnetic Starter	NW/	With
ATS	Automatic Transfer Switch	M/C	Momentary Contact	WAG	Wire Guard
AUTO	Automatic	MC	Mechanical Contractor	WHT	Water Heater
AUX	Auxiliary	MCB	Main Circuit Breaker	NW/O	Without
AV	Audio Visual	MCC	Motor Control Center	TWP	Weatherproof
AWG	American Wire Gauge	MDC	Main Distribution Center	OXFAM	Transformer
BATT	Battery	MDP	Main Distribution Panel	FRP	Transfer
BD	Board	MFR	Manufacturer		
BLDG	Building	MFS	Main Fused Disconnect Switch		
BMS	Building Management System	MH	Manhole	∠	Angle
C	Conduit	MIC	Microphone	@	At
CAB	Cabinet	MIN	Minimum	▲	Delta
CAT	Catalog	MISC	Miscellaneous	'	Feet
CATV	Cable Television	MLO	Main Lugs Only	"	Inches
CB	Circuit Breaker	MMS	Manual Motor Starter	#	Number
CCTV	Closed Circuit Television	MOA	Multioutlet Assembly	O	Phase
CKT	Circuit	MSP	Motor Starter Panelboard	AC	Center Line
CLG	Ceiling	MSBD	Main Switchboard	AP	Plate
COMB	Combination	MSS	Motor Starter Switch		
CMPR	Compressor	MT	Mount		
CONN	Connection	MT.C	Empty Conduit		
CONST	Construction	MTS	Manual Transfer Switch		
CONT	Continuation Or Continuous	MTR	Motor, Motorized		
CONTR	Contractor	N.C.	Normally Closed		
CONV	Convector	NEC	National Electrical Code		
CP	Circulating Pump	NEMA	National Electrical Manufacturer's Association		
CRT	Cathode-Ray Tube	NFDS	Non-Fused Safety Disconnect Switch		
CT	Current Transformer	NIC	Not In Contract		
CTR	Center	NL	Night Light		
CU	Copper	N.O.	Normally Open		
DCP	Domestic Water Circulating Pump	NPF	Normal Power Factor		
DEPT	Department	NTS	Not To Scale		
DET	Detail	OC	On Center		
DIA	Diameter	OH	Overhead		
DISC	Disconnect	OL	Overloads		
DIST	Distribution	PA	Public Address		
DN	Down	PB	Pull Box Or Pushbutton		
DPR	Damper	PE	Pneumatic Electric		
DS	Safety Disconnect Switch	PED	Pedestal		
DT	Double Throw	PF	Power Factor		
DWG	Drawing	PH	Phase		
E	Existing	PIV	Post Indicating Valve		
EC	Electrical Contractor	PNL	Panel		
ELEC	Electric, Electrical	PP	Power Pole		
ELEV	Elevator	PR	Pair		
ELU	Emergency Lighting Unit	PRI	Primary		
EM	Emergency	PROJ	Projection		
EMS	Energy Management System	RV	Power Roof Ventilator		
EMT	Electrical Metallic Tubing	PT	Potential Transformer		
EP	Electric Pneumatic	PVC	Polyvinyl Chloride (Conduit)		
EQUIP	Equipment	PR	Power		
ETR	Existing to Remain	QUEAN	Quantity		
EWC	Electric Water Cooler	RCPT	Receptacle		
EXIST	Existing	RED	Required		
EXH	Exhaust	RM	Room		
EXP	Explosion Proof	RC	Rigid Steel Conduit		
FA	Fire Alarm	RUT	Roof Top Unit		
FABP	Fire Alarm Booster Power Supply Panel	SC	Surface Conduit		
FACP	Fire Alarm Control Panel	SEC	Secondary		
FCU	Fan Coil Unit	SHT	Sheet		
FIXT	Fixture	SIM	Similar		
FLR	Floor	SLDR	Single-Line Diagram		
FLUOR	Fluorescent	S/MN	Solid Neutral		
FU	Fuse	SPEC	Specification		
FUDS	Fused Safety Disconnect Switch	SPRY	Speaker		
GA	Gauge	SP	Spare		
GAL	Gallon	PP	Single-Point Power		
GALV	Galvanized	SR	Surface Raceway		
GC	General Contractor	SS	Stainless Steel		
GEN	Generator	SW	Selector Switch		
GFI	Ground Fault Circuit Interrupter	S/S	Stop/Start Pushbuttons		
GFP	Ground Fault Protector	STA	Station		
GND	Ground	STD	Standard		
GRS	Galvanized Rigid Steel (Conduit)	SURF	Surface Mounted		
GYP BD	Gypsum Board	SW	Switch		
HOA	Hands-Off-Automatic Switch	SWAB	Switchboard		
HORIZ	Horizontal	SYM	Symmetrical		
HP	Horsepower	SYS	System		
HPF	High Power Factor	TEL	Telephone		
HT	Height	TERM	Terminal		
HTG	Heating	TLC	Twist Lock		
HTR	Heater	VTR	Tamper Resistant		
HV	High Voltage				

Electrical Symbol Legend

Lighting Symbols

- Solid hatch indicates light on an emergency or life safety circuit.
- Top Value: Fixture Type. See Schedule.
- Bottom Value, Lowercase Letter: Switch ID
- Bottom Value, Number(S): Circuit Number
- Bottom Value, Uppercase Letter(S): Panel ID

Absence of a switch designation on a lighting fixture indicates fixture is controlled by the only switch in the space. An "x" in place of the switch designation indicates unstitched.

- Pole/Area Lights
- Surface, Pendant or Wall Mounted Luminaire
- Recessed Down Light
- Bollard Light
- Strip Fixture
- Linear Recessed
- Linear Pendant
- Linear Surface
- Directional Light, Track Light, Flood Light
- Linear Light, Tape Light
- Emergency Lighting Unit, Ceiling-Mounted
- Emergency Lighting Unit, Wall-Mounted, Integral Battery
- Exit Light, Ceiling-Mounted. Shading and arrows indicate faces and directional chevrons.
- Exit Light, Wall-Mounted. Shading and arrows indicate faces and directional chevrons.
- Exit/EL Combo

Lighting Control Legend

- Wall Switch, Subscript Indicates Type: 2=2 Circuit D=Dimmer K=Key operated DOW=Wall Mounted OCC Sensor with dimmer OW=Wall mounted OCC sensor OW2=Wall mounted OCC sensor, 2-Circuit (I.E. LTG & EF)
- a,b 2 Zones.
- M,O Manual override switch. See Lighting Controller Specifications.
- PC Photocell Lighting Control Sensor, Aimed north unless otherwise Noted.
- TC Astronomical Time Clock.
- OC Ceiling Mounted Occupancy sensor. See Lighting detail indicated.
- OC a,b Ceiling Mounted, 2 Zones or 2 Circuit (i.e. LTG. & Exhaust fan)

Power Symbols

Wall / Ceiling / Floor

- Simplex Receptacle
- Duplex Receptacle
- Quadruple Receptacle
- Special Receptacle, Type as Indicated

Convenience Receptacle - Single, Duplex, 4-Plex, MTD @ 18" AFF, Unless Noted Otherwise.

Receptacle Modifiers:
##": Height AFF OCD
GFI: Ground-Fault Circuit Interrupter
TWP: Weatherproof In-Use Cover

- Half shading indicates split (typically switched)
- Center shading indicates above Counter
- $ Single-Pole Switch
- J Junction Box
- F1 Floor Box, see schedule for type
- DO Door Opener Push Plate
- M Power Meter
- Disconnect Switch, Fused
- Disconnect Switch, Unused
- Motor Starter
- Combination Starter/Disconnect
- Contractor

Wiring

- Home run to branch circuit panelboard. The equipment name and circuit number(s) are indicated, separated by a hyphen. Homeruns are only intended to indicate panel and circuit number. Actual homerun location shall be field-determined by the contractor.
- Branch Circuit(s) Homerun to Panelboard. 3/4" Conduit Unless noted otherwise. Field Route. Support per NEC.
- 7#12 AWG Conductors, (3) Neutrals, (3) Hot,1 Ground in 3/4" Conduit.

No Multi - wire Branch Circuits Permitted.

- Conduit and Conductors Above Grade.
- Conduit and Conductors Below Grade or Slab.
- Conduit Turn Down/Conduit Turn Up
- Conduit, Stubbed and Capped
- G Grounded Electrode Conductor
- Conduit Seal Fitting

Power Distribution Equipment

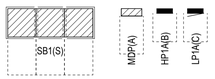

Hatched fill indicates distribution panel or switchboard.
Solid fill indicates branch panel or load center.
Dashed box indicates code-required clearance (width and depth).
Door indicates front of recessed panel.

Panelboards are assigned an abbreviated indicator (or Panel ID) for use with circuit numbers. Panel ID is listed within the panel schedule and in the panel abbreviation schedule.

Equipment is tagged with Panel Name and with Panel ID in parentheses. Panel ID is intended as a design documentation aid only. Do not include Panel ID in field-applied circuit directories or labels.

Devices and fixtures are tagged with Panel ID and circuit number. For example, a device tagged with "A1" indicates the device is circuited to panel designated "A," circuit number 1. The panel schedule circuit number contains both the panel abbreviation and the circuit number.

- Transformer: Typically transformer names begin with or contain the letter "T". See Single-Line Diagram for description and requirements.

Power Conduit Fill Example:

(2) 4"C.. | 4 #500, 1 #1 / 0G.

- Ground Conductor Size
- Quantity of Ground Conductors
- Conductor Size (AWG or KCMIL)
- Quantity of Phase, Neutral, or Control Conductors (Neutral Conductors may be specified with an 'N' Suffix)
- Conduit Size (See Specification for types)
- Total Quantity of Identical Conduits as Specified (if multiple)

- Equipment Schedule Reference Indicator. Refer to Sheet # Indicated on Plan.

Telecom Symbols

Wall / Ceiling / Floor

- Data Outlet
- Telephone Outlet
- Data/Telephone Outlet

Outlet Modifiers:
##": Height AFF OCD

- Wireless Access Point
- TV Outlet

Security Symbols

- Security Camera
- CR Card Reader
- DC Door Contact
- ES Electric Strike
- IC Intercom
- ML Magnetic Lock

Miscellaneous

- Area Not in Contract
- Existing to Be Demolished
- # Keynote
- Callout: Top Value: Detail Number on Sheet Bottom Value: Sheet Number of Detail
- ROOMNAME / # Room Name and Number
- 4B Feeder Type
- E1D54F7 Equipment Tag
- 16120 Specification Number
- 220 Equipment Bill-of-Mat'l Reference
- E0.2 Drawing Reference. See Sheet Indicated for Detailed Information

Fire Alarm Symbols

- H Horn Strobe, Wall (Show Candela)
- H Horn Strobe, Ceiling (Show Candela)
- S Speaker Strobe (Show Candela)
- Strobe Only (Show Candela)
- F Manual Pull Station
- S Smoke Detector (Add Type)
- C Carbon Monoxide Detector
- H Heat Detector (Show Temp Rating)
- D Duct Smoke Detector
- T Beam Detector T: Transmitter R: Receiver
- D S C CO Combination Detector (Up to Three)
- Smoke Damper
- DH Door Holder
- DCL Door Closer
- Fire Service Phone
- XXXX Fire Alarm Control Unit

EVA: Voice Evacuation Control Panel
FAA: Fire Alarm Annunciate
FLAP: Fire Alarm Control Panel
ATC: Fire Alarm Terminal Cabinet
NAACP: Notification Appliance Circuit Panel
FAN: Fire Alarm Mass Notification Control Panel

- 1-LINE UTILITY INCOMING
- TRANSFORMERS
- POWER TRANSFORMER SUBSTATION OR DISTRIBUTION TYPE. VA, IMPEDANCE, VOLTAGE, AND CONNECTIONS ARE AS NOTED.
- TRIP FRAME CIRCUIT BREAKERS
- FUSE SWITCH DISCONNECTS & FUSES
- MOTORS & MOTOR STARTERS
- M MOTOR CONNECTION. FOR HORSEPOWER, REFER TO ONE-LINE DIAGRAM OR EQUIPMENT SCHEDULE
- CONTACTOR, NEWMAN SIZE AS SHOWN. ENCLOSED WHEN SHOWN ON PLAN.
- AOL STARTER, NEWMAN SIZE AS SHOWN. ENCLOSED WHEN SHOWN ON PLAN.
- FUSE SWITCH AOL COMBINATION STARTER, NEWMAN SIZE AS SHOWN CIRCUIT BREAKER OR FUSED DISCONNECT SWITCH TYPE. ENCLOSED WHEN SHOWN ON PLAN.

Sheet Index

SHEET NO.	SHEET NAME
E000	ELECTRICAL COVER SHEET, LEGEND & ABBREVATIONS
E002	GENERAL NOTES
E003	LIGHTING SPECIFICATIONS & ENERGY CALCULATIONS
E005	EQUIPMENT SCHEDULE
E030	ELECTRICAL DEMOLITION PLANS - ADMIN BUILDING
E070	ELECTRICAL SITE PLAN
E100	POWER PLAN ADMIN BUILDING ADDITION & WEIGH SCALE
E110	POWER PLANS INSPECTION BUILDING
E210	ROOF POWER PLAN INSPECTION BUILDING
E300	LIGHTING PLAN ADMIN BUILDING ADDITION
E310	LIGHTING PLANS INSPECTION BUILDING
E600	ELECTRICAL ONE LINE DIAGRAM AND SCHEDULES
E700	PANEL SCHEDULES ADMIN BUILDING
E701	PANEL SCHEDULES INSPECTION BUILDING
E800	ELECTRICAL DETAILS
E801	ELECTRICAL DETAILS
E802	ELECTRICAL DETAILS

SCOPE OF WORK:

THE WORK SHALL INCLUDE, BUT IS NOT LIMITED TO, FURNISHING AND INSTALLING THE FOLLOWING:

SITE ELECTRICAL AND UTILITY INFRASTRUCTURE.

FOR SITE LIGHTING SEE CIVIL SHEETS.

INTERIOR AND BUILDING MOUNTED LIGHTING AND CONTROLS.

POWER DISTRIBUTION.

LOW VOLTAGE RACEWAYS AND ROUGH-IN.

GROUND ELECTRODE SYSTEM.

CODES & STANDARDS

ALL OF THE FOLLOWING ARE HEREBY MADE A PART OF THESE SPECIFICATIONS. THEY SHALL BE SATISFIED BY THE CONTRACTOR AT NO ADDITIONAL EXPENSE TO THE OWNER.

GENERAL	EDITION
NATIONAL ELECTRICAL CODE (NFPA 70)	2017*
LOCAL AND STATE CODES AND CODE AMENDMENTS	STATE OF ARIZONA
UTILITY SPECIFICATIONS AND REQUIREMENTS	
OWNER SPECIFICATIONS & STANDARDS	
AMERICANS WITH DISABILITIES ACT & GUIDELINES (ADA)	
INTERNATIONAL BUILDING CODE (IBC)	2018*
INTERNATIONAL EXISTING BUILDING CODE (IEBC)	2018*
INTERNATIONAL MECHANICAL CODE (IMC)	2018*
INTERNATIONAL PLUMBING CODE (IPC)	2018*

FIRE & LIFE SAFETY CODES	EDITION
INTERNATIONAL FIRE CODE (IFC)	2018*
NFPA 72 - NATIONAL FIRE ALARM CODE	2018*
NFPA 101 - LIFE SAFETY CODE	2018*
NFPA 13 - FIRE SPRINKLER CODE	2018*

ENERGY CODES	EDITION
INTERNATIONAL ENERGY CONSERVATION CODE (IECC)	2018*

PROJECT CONTACTS

ELECTRIC UTILITY: SULPHUR SPRINGS VALLEY ELECTRIC COOPERATIVE (SSVEC)

CHRISTA CROWELL
ENGINEERING SERVICES REPRESENTATIVE/RIGHT OF WAY AGENT
CCROWELL@SSVEC.COM
OFFICE: 520-515-3465

RYAN REESE
RIGHT OF WAY TECHNICIAN
RREESE@SSVEC.COM
OFFICE: 520-384-5469
CELL: 520-678-8368

FIRE ALARM REQUIREMENTS

FIRE ALARM DESIGN IS NOT REQUIRED BASED ON SIZE AND TYPE OF BUILDINGS.

THERE IS NO FIRE ALARM SYSTEM TO BE INSTALLED IN EXISTING OFFICE OR INSPECTION BUILDING.

APPLIED ENGINEERING
2800 S. RURAL RD. SUITE 101
TEMPE, AZ 85282 (480)968 3070

VOLTA
1730 E. Northern Avenue, Ste. 120, Phoenix, AZ 85020
Tel. (480) 659-0511, VoltaUS.com

12/30/26 Registered Professional Engineer (Retired) CERTIFICATE NO. 30536 WILLIAM J. BETHURUM, IV ARIZONA U.S.A.
SEAL EXPIRY: 09/30/26

Issue Date:	10 JULY 2026	
Revisions:	# Description	Date

gabor lorant architects
3326 n. 3rd avenue suite 200
phoenix, arizona 85013
tel: 602.667.9090
fax: 602.667.9133
gaborlorant.com
gla Project No.: PHX21-5038-00

ARIZONA DEPARTMENT OF TRANSPORTATION
PROJECT DELIVERY AND OPERATIONS DIVISION
PROJECT MANAGEMENT GROUP

SAN SIMON PORT OF ENTRY
ELECTRICAL COVER SHEET, LEGEND & ABBREVATIONS

ROUTE I-10
MILEPOST 383
STRUCTURE NO.

F.H.W.A Arizona Division	STATE	PROJECT NO.	FEDERAL ID NO.	SHEET NO.	TOTAL SHEETS	RECORD DRAWING
	ARIZ.	010 CH 383	010-F(238)T	168	200	

LOCATION: SAN SIMON PORT OF ENTRY (POE)

TRACS NO. F0728 01C

DWG NO. E000
___ OF ___

7/23/2026 9:18:56 PM

DO NOT SCALE DRAWINGS. DO NOT PLOT 'SCALE TO FIT'. THIS DOCUMENT IS FORMATTED FOR THE ANSI D (22"x34") SHEET SIZE.
FULL-SIZE PLOT ON ANSI D (22"x34") PAPER ONLY. HALF-SIZE PLOT ON 11"x17" PAPER ONLY.

STAPLE ZONE

SPECIAL SYSTEMS RESPONSIBILITY MATRIX

	ELECTRICAL CONTRACTOR	OWNER	ACCESS CONTROLS INSTALLER	VIDEO SURVEILLANCE INSTALLER	INTRUSION DETECTION INSTALLER	LOW VOLTAGE CABLE INSTALLER	.	.	.	.	.	.	.
CABLE TRAY FURNISH AND INSTALL	●												
ACCESS CONTROL ROUGH-IN AND RACEWAYS, AND 120V POWER TO DOORS, HARDWARE	●												
ACCESS CONTROL WIRING, DEVICES, HARDWARE			●										
VIDEO SURVEILLANCE CAMERAS FURNISH AND INSTALL				●									
VIDEO SURVEILLANCE WIRING (CAT6)				●									
VIDEO SURVEILLANCE HARDWARE				●									
INTRUSION DETECTION ROUGH-IN AND RACEWAYS	●												
INTRUSION DETECTION WIRING, DEVICES, HARDWARE					●								
NETWORK CABLING, WIRING DEVICES, HARDWARE						●							
NETWORK CABLING ROUGH-IN, RACEWAYS, BOXES, AND FLOOR BOXES	●												
LOW VOLTAGE SYSTEM DESIGN AND SHOP DRAWINGS			●	●	●	●							
LOW VOLTAGE SYSTEM REVIEW AND APPROVAL		●											

ELECTRICAL CONTRACTOR SHALL INCLUDE IN THE SCOPE OF WORK A MEETING WITH OWNER'S IT REPRESENTATIVE AND EACH LOW VOLTAGE SUBCONTRACTOR TO REVIEW PROPOSED SYSTEM DESIGN, MATERIALS, SOFTWARE, AND HARDWARE REQUIREMENTS PRIOR TO CONSTRUCTION.

NOTE: THERE ARE REQUIREMENTS FOR LOW VOLTAGE SUBCONTRACTORS TO PREPARE AND SUBMIT SHOP DRAWINGS FOR APPROVAL AS PART OF PROJECT SPECIFICATIONS.

SUBMITTAL REQUIREMENTS

ALL PARTIES ON THE PROJECT BENEFIT FROM PROMPT AND ACCURATE REVIEWS OF COMPLETE AND WELL ORGANIZED SUBMITTAL PACKAGES.

PRIOR TO ORDERING, SUBMITTALS REVIEWED BY THE ENGINEER ARE REQUIRED FOR THE FOLLOWING (AS APPLICABLE TO THE PROJECT)

1. PANELS, SWITCHBOARDS
2. WIRE & CABLE
3. FLOOR BOXES & POKE-THRU ASSEMBLIES
4. RACEWAYS & BOXES
5. LIGHT FIXTURES & LIGHTING CONTROLS

ALL FIRST SUBMITTALS SHALL USE THE FOLLOWING FORMAT OR SHALL BE RETURNED FOR CORRECTIONS UNTIL FORMATTED AS FOLLOWS:

1. SUBMITTED IN ELECTRONIC PDF FILE FORMAT IDENTIFIED AS A FIRST SUBMITTAL.
2. SUBMITTAL CUT SHEETS SHALL BE LABELED WITH RED, BOLDFACE TEXT IN THE TOP RIGHT HAND CORNER OF THE FIRST PAGE WITH THE EQUIPMENT TAG AS LABELED ON PLANS SUCH AS PPH1, A1, ETC. (UNIDENTIFIED CUT SHEETS WILL BE RETURNED).
3. OPTIONS NOTED BY THE ENGINEER ON THE CONSTRUCTION DOCUMENT SCHEDULE SHALL BE CLEARLY IDENTIFIED AS BEING PROVIDED BY THE SUPPLIER/CONTRACTOR WITH EACH OPTION ON THE SUBMITTAL MARKED WITH A RED BOX, CIRCLE, CHECK, OR OTHER SIMILAR CONSPICUOUS INDICATION THAT THE SUBMITTED DEVICE'S OPTIONS ACTUALLY MATCH THE PLAN SCHEDULE NOTES (GENERIC EQUIPMENT SHEETS WITH MULTIPLE UNIDENTIFIED OPTIONS WILL BE RETURNED).
4. CONTRACTOR/SUPPLIER SUBMITTAL IS A PRESENTATION TO THE ENGINEER BY THE CONTRACTOR/SUPPLIER THAT THE EQUIPMENT SUBMITTED IS EQUIVALENT TO THAT SPECIFIED ON THE CONSTRUCTION DOCUMENTS. EQUIPMENT SUBSTITUTIONS WHICH INCLUDE OR REQUIRE DEVIATIONS FROM THE CONSTRUCTION DOCUMENT'S REQUIREMENTS SHALL BE CLEARLY IDENTIFIED BY THE CONTRACTOR/SUPPLIER DIRECTLY ON THE FIRST PAGE OF THE CUT SHEET WITH A CLEAR EXPLANATION OF THE REASON(S) FOR NON-COMPLIANCE OR EQUIVALENCE WITH EQUIPMENT SCHEDULES. FAILURE OF SUBSTITUTED EQUIPMENT TO PERFORM TO THE LEVEL SPECIFIED IN THE EQUIPMENT SCHEDULE MAY REQUIRE REPLACEMENT OF SUBSTITUTED EQUIPMENT IF DEVIATIONS ARE NOT CLEARLY IDENTIFIED ON THE SUBSTITUTION.

ALL RESUBMITTALS OF EQUIPMENT OR MATERIALS PREVIOUSLY REJECTED BY THE ENGINEER SHALL BE RESUBMITTED WITH THE FOLLOWING FORMAT:

1. SUBMITTED IN ELECTRONIC PDF FILE FORMAT IDENTIFIED AS "RESUBMITTAL #"; BEGINNING WITH "RESUBMITTAL 1" AND CONTINUING WITH SEQUENTIAL NUMBERING ON RESUBMITTALS THAT MAY FOLLOW.
2. INCLUDE CUT SHEETS OF ONLY THE ITEMS THAT HAVE BEEN RETURNED/REJECTED BY THE ENGINEER ON THE FIRST SUBMITTAL (COMPLETE RESUBMITTALS OF ALL PROJECT EQUIPMENT WILL BE RETURNED TO BE REDUCED DOWN TO RESUBMITTAL ITEMS ONLY).
3. ALL EQUIPMENT RETURNED OR REJECTED IN THE FIRST REVIEW SHALL BE RESUBMITTED IN ONE RESUBMITTAL (PER EQUIPMENT SPECIFICATIONS),(PARTIAL RESUBMITTALS MISSING PREVIOUSLY REJECTED OR RETURNED EQUIPMENT WILL BE RETURNED UNTIL COMPLETE).
4. RESUBMITTAL CUT SHEETS SHALL BE LABELED WITH RED, BOLDFACE TEXT IN THE TOP RIGHT HAND CORNER OF THE FIRST PAGE WITH THE EQUIPMENT TAG AS LABELED ON PLANS SUCH AS PPH1, A1, ETC. (UNIDENTIFIED CUT SHEETS WILL BE RETURNED).
5. OPTIONS NOTED BY THE ENGINEER ON THE CONSTRUCTION DOCUMENT SCHEDULE SHALL BE CLEARLY IDENTIFIED AS BEING PROVIDED BY THE SUPPLIER/CONTRACTOR WITH EACH OPTION ON THE SUBMITTAL MARKED WITH A RED BOX, CIRCLE, CHECK, OR OTHER SIMILAR CONSPICUOUS INDICATION THAT THE RESUBMITTED DEVICE'S OPTIONS ACTUALLY MATCH THE PLAN SCHEDULE NOTES (GENERIC EQUIPMENT SHEETS WITH MULTIPLE UNIDENTIFIED OPTIONS WILL BE RETURNED).
6. INCLUDE CUT SHEET UPDATES TO CONFORM TO THE REQUIREMENTS OF THE CONSTRUCTION DOCUMENTS AS PREVIOUSLY INDICATED AND REQUIRED BY THE ENGINEER IN THE FIRST SUBMITTAL.
7. IDENTIFY ANY CHANGES MADE OTHER THAN THOSE REQUESTED BY THE ENGINEER IN THE PREVIOUSLY RETURNED/REJECTED SUBMITTAL. PROVIDE A STATEMENT EXPLAINING ANY CHANGES WHICH WERE NOT PROMPTED BY THE ENGINEER'S PREVIOUS REVIEW.

CONTRACTOR COORDINATION REQUIREMENTS

AREAS ABOVE CEILINGS HAVE RESTRICTED SPACE LIMITATIONS. CONTRACTOR SHALL REVIEW PLANS AND FIELD CONDITIONS, ATTEND COORDINATION MEETINGS WITH ALL TRADES PRESENT, AND SET ALL DUCT, FIRE SPRINKLER PIPE, PLUMBING, DAMPER, ELECTRICAL, CABLE TRAY, AND CONDUIT ROUTES TO ACCOMMODATE ALL TRADES, ALL BUILDING ELEMENTS, LIGHTING, FIRE, AND EQUIPMENT. FIELD VERIFY ALL REQUIRED CLEARANCES AND EQUIPMENT LOCATIONS PRIOR TO COMMENCING PROJECT, FABRICATING OR INSTALLING SYSTEMS. TRADES SHALL ESTABLISH A RIGHT-OF WAY PLAN, AND SET DUCT AND PIPE ELEVATIONS PRIOR TO CONSTRUCTION AND CLOSELY COORDINATE ROUTING TO AVOID CONFLICTS. CONTRACTOR SHALL NOT CHARGE OWNER, ARCHITECT, GENERAL CONTRACTOR, ENGINEER OR OTHERS FOR FIELD ADJUSTMENT DUE TO FIELD CONDITIONS. CONTRACTOR MUST INCLUDE IN FEE TO COMPLETE PROJECT MISCELLANEOUS CONDUIT, TRAY, TRANSITIONS, AND OFFSETS. PRIOR CLOSE COORDINATION SHALL BE CONSIDERED INCLUDED IN BASE SCOPE OF WORK WITHOUT ADDITIONAL COMPENSATION FEES. CONTRACTOR SHALL OBTAIN ARCHITECTURAL PLANS, MECHANICAL PLANS, PLUMBING PLANS, ELECTRICAL PLANS, AND FIRE SPRINKLER PLANS AND VERIFY INTENDED EQUIPMENT LOCATIONS, CEILING HEIGHTS, AND OTHER ARCHITECTURAL FEATURE LOCATIONS AND SHALL INSTALL AND ROUTE SYSTEMS ACCORDINGLY TO ENSURE EQUIPMENT FITS AND THAT EQUIPMENT SERVICE ACCESS IS UNOBSTRUCTED. FIELD ROUTING OF SYSTEMS MAY NEED TO BE ADJUSTED FROM THESE DIAGRAMATIC PLANS, AND ANY REQUIRED FITTINGS SHALL BE PROVIDED TO SUIT.

SPECIAL SYSTEMS COORDINATION

THE INSTALLING CONTRACTOR SHALL INCLUDE IN THE SCOPE OF WORK TO ARRANGE AND ATTEND A MEETING WITH OWNER'S IT REPRESENTATIVE, ACCESS CONTROLS INSTALLER, AND DATA CABLING INSTALLER TO REVIEW PROPOSED SYSTEM DESIGNS, MATERIALS, SOFTWARE, ROUGH-IN, AND HARDWARE REQUIREMENTS PRIOR TO PREPARATION OF FINAL SHOP DRAWINGS FOR OWNER'S REVIEW AND APPROVAL.

GENERAL REQUIREMENTS

REFER TO DIVISION 26 AND 28 SPECIFICATIONS FOR COMPLETE REQUIREMENTS. IN THE CASE OF CONFLICTS, THE MORE STRINGENT SHALL APPLY. THIS SECTION INCLUDES ALL ELECTRICAL WORK AND RELATED ITEMS REQUIRED TO COMPLETE THE WORK INCLUDED ON DRAWINGS. FURNISH ALL LABOR, MATERIALS, EQUIPMENT, SERVICES & ALL ELSE REQUIRED TO MAKE COMPLETE AND OPERATIVE ELECTRICAL SYSTEMS & INSTALLATIONS IN ACCORDANCE WITH MANUFACTURER'S INSTRUCTIONS, CODES & REGULATIONS IN FORCE. ALSO INCLUDED IS ANY REPAIR REQUIRED TO MATCH EXISTING CONDITIONS AND FINISHES, OF ANY AREAS OR MATERIALS DUE TO ELECTRICAL DEMOLITION OR RELOCATIONS.

ALL EQUIPMENT, FIXTURES, DEVICES, MATERIALS SHALL BE NEW AND UL LISTED OR LISTED BY A THIRD-PARTY NRTL ACCEPTABLE TO THE AHJ. INDUSTRIAL CONTROL PANELS SHALL COMPLY WITH NFPA 79 AND NEC ART. 409, IN PARTICULAR WITH RESPECT TO SCCR, LISTING, AND NAMEPLATE REQUIREMENTS.

UNLESS ITEMS OF MATERIAL, EQUIPMENT OR WORK ARE SPECIFICALLY REQUIRED HEREIN TO BE SUPPLIED OR FURNISHED BY OTHERS, THEY SHALL BE PROVIDED UNDER THIS SECTION WHETHER OR NOT SO SPECIFICALLY DENOTED.

SUBMITTAL OF SHOP DRAWINGS, PRODUCT DATA, AND SAMPLES WILL BE ACCEPTED ONLY WHEN SUBMITTED BY THE GENERAL CONTRACTOR TO THE DESIGNATED PERSON BY THE OWNER. DATA SUBMITTED FROM SUBCONTRACTORS AND MATERIAL SUPPLIERS DIRECTLY TO THE ARCHITECT/ENGINEER WILL NOT BE PROCESSED.

MARK DRAWINGS TO INDICATE REVISIONS TO EQUIPMENT, RACEWAY, AND DEVICE LOCATIONS AND REVISIONS TO PANEL SCHEDULES.

CONTRACTOR SHALL MAKE TESTS AT HIS OWN EXPENSE, IN THE PRESENCE OF THE OWNER OR HIS REPRESENTATIVE, AS REQUIRED BY OWNER AND/OR ANY INSPECTION DEPARTMENT. TESTS SHALL BE MADE TO ASCERTAIN WHETHER THE SYSTEM AND EQUIPMENT INSTALLED COMPLY WITH THE DRAWINGS AND SPECIFICATIONS.

COORDINATE ELECTRICAL EQUIPMENT AND MATERIALS INSTALLATION WITH OTHER BUILDING COMPONENTS. VERIFY ALL DIMENSIONS BY FIELD MEASUREMENTS. ARRANGE FOR CHASES, SLOTS, AND OPENINGS IN OTHER BUILDING COMPONENTS TO ALLOW FOR ELECTRICAL INSTALLATIONS.

COORDINATE THE INSTALLATION OF REQUIRED SUPPORTING DEVICES AND SLEEVES TO BE SET IN POURED IN PLACE CONCRETE AND OTHER STRUCTURAL COMPONENTS, AS THEY ARE CONSTRUCTED.

SEQUENCE, COORDINATE, & INTEGRATE INSTALLATIONS OF ELECTRICAL MATERIALS AND EQUIPMENT, GIVING PARTICULAR ATTENTION TO LARGE EQUIPMENT REQUIRING POSITIONING PRIOR TO CLOSING-IN BUILDING AREAS.

MAINTAIN WORKING CLEARANCE ABOUT ELECTRICAL EQUIPMENT PER NEC ART. 110.

COORDINATE THE INSTALLATION OF ELECTRICAL MATERIALS AND EQUIPMENT ABOVE CEILINGS WITH SUSPENSION SYSTEM, MECHANICAL EQUIPMENT AND SYSTEMS, & STRUCTURAL COMPONENTS.

STORE EQUIPMENT AND MATERIALS AT THE SITE, UNLESS OFF-SITE STORAGE IS AUTHORIZED IN WRITING. PROTECT STORED EQUIPMENT AND MATERIALS FROM DAMAGE. THE EQUIPMENT SHALL BE KEPT UNDER CONTROLLED CONDITIONS TO PREVENT MOISTURE AND/OR CONDENSATION ON CRITICAL ELECTRICAL PARTS.

ELECTRICAL CONTRACTOR SHALL PROVIDE 120V, 20A POWER TO CONTROL PANELS FOR ALL SYSTEMS INCLUDING HVAC / BAS, ACCESS CONTROLS, COMMUNICATIONS, AUDIO VISUAL.

ELECTRICAL CONTRACTOR SHALL PROVIDE 120V, 20A POWER TO MECHANICAL ANCILLARY AND CONTROL DEVICES INCLUDING FIRE DAMPERS, MOTORIZED VALVES, 120V CONTROL COMPONENTS INCLUDING LOW VOLTAGE (24V) CONTROL TRANSFORMERS WHEN NOT PROVIDED BY MECHANICAL CONTRACTOR.

COORDINATE WITH SITE CIVIL AND LANDSCAPE DRAWINGS FOR LOCATION OF AND POWER FOR IRRIGATION CONTROLLERS, SITE LIGHTING, LANDSCAPE LIGHTING.

COORDINATE ALL UNDERGROUND WORK WITH OTHER UTILITIES INCLUDING BUT NOT LIMITED TO SEWER, WATER, FIRE WATER, NATURAL GAS, PROCESS PIPING, DRAINAGE, RETENTION AND LOW VOLTAGE ELECTRICAL SYSTEMS. COORDINATE DUCTBANK DEPTH AND ROUTING ACCORDINGLY.

COORDINATE WITH MECHANICAL INSTALLER, MECHANICAL PLANS, AND VFD SUPPLIER TO ACCOMMODATE BRANCH CONDUCTOR ADJUSTMENTS WHICH MAY BE REQUIRED FOR EQUIPMENT SERVED BY VFDs TO AVOID VOLTAGE REFLECTION EFFECTS.

APPLIED ENGINEERING
2800 S. RURAL RD. SUITE 101
TEMPE, AZ 85282 (480)968 3070

VOLTA
1730 E. Northern Avenue, Ste. 120, Phoenix, AZ 85020
Tel. (480) 659-0511, VoltaUS.com

09/30/20 Registered Professional Engineer (Electrical) CERTIFICATE NO. 30536 WILLIAM J. BETHURUM, IV ARIZONA U.S.A.
SEAL EXPIRY: 09/30/26

Issue Date:	10 JULY 2026	
Revisions:	# Description	Date

gabor lorant architects
3326 n. 3rd avenue suite 200
phoenix, arizona 85013
tel: 602.667.9090
fax: 602.667.9133
gaborlorant.com
gla Project No.: PHX21-5038-00

ARIZONA DEPARTMENT OF TRANSPORTATION
PROJECT DELIVERY AND OPERATIONS DIVISION
PROJECT MANAGEMENT GROUP

SAN SIMON PORT OF ENTRY
GENERAL NOTES

ROUTE I-10
MILEPOST 383
STRUCTURE NO.

F.H.W.A Arizona Division	STATE	PROJECT NO.	FEDERAL ID NO.	SHEET NO.	TOTAL SHEETS	RECORD DRAWING
	ARIZ.	010 CH 383	010-F(238)T	169	200	

LOCATION SAN SIMON PORT OF ENTRY (POE)

TRACS NO. F0728 01C

DWG NO. **E002**
___ OF ___

7/23/2026 9:18:56 PM

DO NOT SCALE DRAWING. DO NOT PLOT "SCALE TO FIT". THIS DOCUMENT IS FORMATTED FOR THE ANSI D (22"x34") SHEET SIZE.
FULL-SIZE PLOT ON ANSI D (22"x34") PAPER ONLY. HALF-SIZE PLOT ON 11"x17" PAPER ONLY.

STAPLE ZONE

FIXTURE SCHEDULE

Proj. Tag	Description	Location(s): Rm # or Sheet #	Mounting	Finish	Volts	Type	Fixt Watts	Temp. (K)	Emerg.	Control	Envir. Wet/Damp	IC Rating	Manufacturer/Cat# (Basis of Design)	Alternate Manufacturers	Keyed Notes & Comments
EMERGENCY LIGHTING AND EXIT SIGNS															
EBH	EMERGENCY LIGHT EXTENDED COVERAGE, BUG EYE STYLE, LITHIUM IRON PHOSPHATE BATTERY & SELF DIAGNOSTICS	VARIES	SURFACE	WHITE	MV	LED	11W	N/A	YES	N/A	-	-	LITHONIA ELM6L(1100LUMENS)-LED-11W-W-MV-(SD)-LTP-(OPTIONS)	OR EQUAL	
EX	EXIT SIGN, LED, BATTERY BACKUP, THERMOPLASTIC	VARIES	SURFACE	WHITE	MV	LED	1W	N/A	YES	N/A	-	-	LITHONIA LQM-S-[WHITE/BLACK]-[R/G]-120/277-EL-N	OR EQUAL	
EY	EXIT SIGN WITH EMERGENCY LIGHTS COMBINATION TYPE, THERMOPLASTIC	ADMIN, INSPECTION	SURFACE	TBD	MV	LED	3W	N/A	YES	N/A	-		LITHONIA QUANTUM LQHM-LED-[WHITE/BLACK]-[R/G]-120/277	OR EQUAL	
EXTERIOR LIGHTING															
SNS	6FT, 4" APPERTURE, RECESSED LINEAR LED, EXTERIOR RATED	CANOPY	RECESSED	TBD	MV	LED	29W	4000K	-	-	WET	-	PINNACLE EV3-WET 840 6 IND FL(F) U FSD 1 0 (FINISH)	OR EQUAL	2
SDL	LED, RECESSED DOWNLIGHT, 4", ROUND	ADMIN - CANOPY	RECESSED	TBD	MV	LED	22W	4000K	-	DIMMABLE	DAMP	-	LITHONIA #LDN4-40/20-LO4-L04-AR-LSS-TRW-MV-EZ1-WET LOCATION RATED UNDER CANOPY	OR EQUAL	
SDLE	SAME AS TYPE 'SDL' WITH EMERGENCY BATTERY BACKUP								YES				-E10WCP OR REMOTE INVERTER AS NEEDED	OR EQUAL	
SFG	LED FLAG POLE LIGHTING, FLOOD LIGHT WITH SHROUD, INSTALL BASE AS NEEDED	ADMIN - FLAGPOLE	IN GRADE	TBD	MV	LED	21W	4000K	-	DIMMABLE	WET	-	LITHONIA DSXF1-P1-40K-NSP-MV-(THK ON CONCRETE BASE)	OR EQUAL	1
INTERIOR LIGHTING															
FB	2X4 RECESSED TROFFER, DIRECT/INDIRECT, LED, DIMMABLE	ADMIN BLDG	GRID	WHITE	MV	LED	47W	4000K	-	DIMMABLE	-	-	LITHONIA 2BTL4-40L(34W)-ADP-MV-EZ1-LP840	OR EQUAL	
FBE	SAME AS TYPE 'FB' WITH BATTERY PACK	ADMIN BLDG							YES		-	-	-EL14L	OR EQUAL	
HB	17INCH ROUND LED HIGHBAY, RIGID PENDANT MOUNT	INSPECTION BLDG	PENDANT	TBD	MV	LED	118W	4000K	-	DIMMABLE	WET	-	RIG-A-LITE IALJ-15 (118W)-L-U-CG-5-G-RIGID PENDANT MOUNT-40K	OR EQUAL	3
LS4	4FT LINEAR LED STRIP LIGHT WITH DIFFUSER	VARIES	SURFACE	WHITE	MV	LED	32W	4000K	-	DIMMABLE	-	-	LITHONIA CLX-L48-5000LM-SEF-FDL-MVOLT-GZ10-40K-80CRI-WH-MOUNTING (MTG: SURFACE, CHAIN HUNG)	OR EQUAL	
LS4E	SAME AS TYPE 'LS4' WITH EMERGENCY BATTERY BACKUP								YES				-E10W	OR EQUAL	
NS	4FT SURFACE MOUNTED LINEAR LED, DIRECT	VARIES	SURFACE	WHITE	MV	LED	26W	4000K	-	DIMMABLE	-	-	MARK ARCHITECTURAL S4PD-LLP-4FT-MSL4-80CRI-40K-800LMF-DBW-SCT-MIN1-FLL-MV-(SLVT)	OR EQUAL	
R4	LED, RECESSED DOWNLIGHT, 4", ROUND	ADMIN BLDG	RECESSED	WHITE	MV	LED	18W	4000K	-	DIMMABLE	WET	-	LITHONIA #LDN4-40/15-LO4-AR-L04--AR-LSS-TRW-MV-EZ1	OR EQUAL	
R4E	SAME AS TYPE 'R4' WITH EMERGENCY BATTERY BACKUP	ADMIN BLDG							YES				-E10WCP	OR EQUAL	
STLD	RECESSED LED FIXTURE WITH LENS INTEGRALLY AT AN ANGLE (D=DOWNWARDS)	SCALE, INSPECTION	RECESSED	TBD	MV	LED	21W	4000K	-	DIMMABLE	WET	-	KIM LIGHTING LLF40 LED	OR EQUAL	
STLU	SAME FIXTURE AS 'STLD', ROTATED 180 DEGREES TO BE AIMED UPWARDS	SCALE, INSPECTION									WET		-AIMED UPWARD	OR EQUAL	
LIGHTING CONTROLS															
OC	OCCUPANCY SENSOR, CEILING MOUNT, PIR, STANDARD RANGE, LOW VOLTAGE EQUIVALENT	VARIES	CEILING	WHITE	N/A	N/A	N/A	N/A	N/A	N/A	N/A	N/A	SENSORSWITCH, CMR-9-WH	OR EQUAL	
OCX	OCCUPANCY SENSOR, CEILING MOUNT, PIR, EXTENDED RANGE, LOW VOLTAGE EQUIVALENT	INSPECTION BAY	CEILING	WHITE	N/A	N/A	N/A	N/A	N/A	N/A	N/A	N/A	SENSORSWITCH, CMR-10-WH	OR EQUAL	
LC	LIGHTING CONTROLLER, 16 OR 32 POLES AS NEEDED, 18KAIC	INSPECTION BLDG	SURFACE	N/A	VARIES	N/A	N/A	N/A	N/A	N/A	N/A	N/A	ARP RELAY PANEL	OR EQUAL	
TC	ASTRONOMICAL 7-DAY TIME SWITCH, 1, 2 OR 4 CIRCUITS, HOLIDAY OVERRIDE, NEMA 1 OR 3R ENCL.		SURFACE	GRAY	VARIES	N/A	N/A	N/A	N/A	N/A	N/A	N/A	INTERMATIC ET2845C	OR EQUAL	4

KEYED NOTES:
1. CONSULT THE LIGHTING SUPPLIER FOR FLAGPOLE LIGHTING PLACEMENT AND AIMING PRIOR TO INSTALLATION.
2. FIXTURE MOUNTED IN METAL PANEL CEILING. COORDINATE MOUNTING, FLANGE WITH ARCHITECTURAL.
3. 17'-0" MOUNTING HEIGHT FROM BOTTOM OF FIXTURE TO FINISHED FLOOR.
4. WHERE APPLICABLE.

LIGHTING CONTROLS SEQUENCE OF OPERATIONS (SOO) BY AREA

1. SEQUENCE OF OPERATIONS: THE OPERATION OF THE SYSTEM BY AREA SHALL BE AS FOLLOWS UNLESS NOTED OTHERWISE. PROVIDE ALL NECESSARY WIRING DEVICES, WIRING, HARDWARE, ETC. AS NEEDED TO COMPLETE THE SYSTEM INSTALLATION.

OFFICE:
MANUAL CONTROL: LOCAL SWITCH, MANUAL / AUTOMATIC ON (50% MAX) WITH OCCUPANCY SENSOR
MANUAL / AUTOMATIC OFF (20 MINUTES MAX)
LIGHT REDUCTION CONTROL: FULL DIMMING

IT/MDF ROOM:
MANUAL CONTROL: LOCAL SWITCH, MANUAL
LIGHT REDUCTION CONTROL: NONE
EMERGENCY LIGHTS: WHERE INDICATED

LOBBY/WAITING ROOM:
MANUAL CONTROL: LOCAL SWITCH, MANUAL/AUTOMATIC ON (100%) WITH OCCUPANCY SENSOR
MANUAL / AUTOMATIC OFF (20 MINUTES MAX)
LIGHT REDUCTION CONTROL: DIMMING, SWITCHED ZONES WHERE INDICATED
NIGHT LIGHTS, CONTINUOUSLY ILLUMINATED
EMERGENCY LIGHTING VIA BATTERY PACKS OR INVERTERS

HALL/CORRIDOR:
MANUAL CONTROL: LOCAL SWITCH, AUTOMATIC ON (100%) WITH OCCUPANCY SENSOR
MANUAL / AUTOMATIC OFF (20 MINUTES MAX)
LIGHT REDUCTION CONTROL: NONE
NIGHT LIGHTS, CONTINUOUSLY ILLUMINATED
EMERGENCY LIGHTING VIA BATTERY PACKS OR INVERTERS

GENERAL NOTES - LIGHTING

REFER TO LIGHTING SEQUENCE OF OPERATIONS FOR INTENDED LIGHTING CONTROL BY AREA TYPE.

EMERGENCY AND EXIT SIGNS SHALL BE CONNECTED TO A NON-SWITCHED LEG OF THE NEAREST BRANCH LIGHTING CIRCUIT. REFER TO LEGEND FOR EMERGENCY LIGHT FIXTURE SYMBOLS.

FIXTURES DESIGNATED AS NIGHT LIGHTS SHALL BE SUPPLIED FROM A NON-SWITCHED LEG OF THE BRANCH LIGHTING CIRCUIT. IN MANY CASES, EMERGENCY FIXTURES WILL BE DESIGNATED AS NIGHT LIGHTS FOR CONVENIENCE.

NON-SWITCHED LEGS FOR NIGHT LIGHTS AND EMERGENCY LIGHTS AND TRAVELLER (OR LOW VOLTAGE CONTROLS) CONDUCTORS FOR 3-WAY SWITCHING ARE NOT SHOWN ON THE PLANS. INSTALL THESE CONDUCTORS AS REQUIRED FOR PROPER OPERATION OF THE LIGHT FIXTURES. INSTALL FLEXIBLE CONDUIT CONNECTIONS TO FIXTURES (NOT TO EXCEED 6' IN LENGTH) WHEN NECESSARY. FLEXIBLE CONDUIT OR MC CABLE SHALL BE PERMITTED IN LOCATIONS LIMITED BY ACCESSIBILITY SUCH AS DOWNLIGHTS IN HARD LID APPLICATIONS.

WHEN LIGHTING CONTROL DEVICES ARE INDICATED ON PLANS AND DETAILS, THE CONTRACTOR SHALL INSTALL ANY ASSOCIATED CONTROL WIRING REQUIRED FOR A COMPLETE AND OPERATIONAL SYSTEM.

BRANCH LIGHTING CIRCUITS RATED 277V SHALL NOT EXCEED 3000W.

COORDINATE THE PURCHASE AND INSTALLATION OF ALL FIXTURES WITH CEILING CONSTRUCTION. WHEN CEILING GRIDS ARE INSTALLED, VERIFY THAT FIXTURES TO BE INSTALLED ARE COMPATIBLE WITH GRID TYPE AND DIMENSIONS.

APPLIED ENGINEERING
2800 S. RURAL RD. SUITE 101
TEMPE, AZ 85282 (480)968 3070

VOLTA
1730 E. Northern Avenue, Ste. 120, Phoenix, AZ 85020
Tel. (480) 659-0511, VoltaUS.com

Registered Professional Engineer (Electrical) CERTIFICATE NO. 30536 WILLIAM J. BETHURUM, IV ARIZONA
09/30/26
SEAL EXPIRES: 09/30/26

Issue Date:	10 JULY 2026	
Revisions:	# Description	Date

gabor lorant architects
3326 n. 3rd avenue suite 200
phoenix, arizona 85013
tel: 602.667.9090
fax: 602.667.9133
gaborlorant.com
gla Project No.: PHX21-5038-00

ARIZONA DEPARTMENT OF TRANSPORTATION
PROJECT DELIVERY AND OPERATIONS DIVISION
PROJECT MANAGEMENT GROUP

SAN SIMON PORT OF ENTRY
LIGHTING SPECIFICATIONS & ENERGY CALCULATIONS

ROUTE I-10	F.H.W.A Arizona Division	STATE	PROJECT NO.	FEDERAL ID NO.	SHEET NO.	TOTAL SHEETS	RECORD DRAWING
MILEPOST 383		ARIZ.	010 CH 383	010-F(238)T	170	200	
STRUCTURE NO.	LOCATION: SAN SIMON PORT OF ENTRY (POE)					DWG NO. E003	
	TRACS NO. F0728 01C					___ OF ___	

07.23.26

DO NOT SCALE DRAWINGS. DO NOT PLOT "SCALE TO FIT". THIS DOCUMENT IS FORMATTED FOR THE ANSI D (22"x34") SHEET SIZE.
FULL-SIZE PLOT ON ANSI D (22"x34") PAPER ONLY. HALF-SIZE PLOT ON 11"x17" PAPER ONLY.

STAPLE ZONE

EQUIP TAG	QTY	DESCRIPTION	LOCATION / DRAWING	LOAD DATA WATTS/HP	kVA	V	PH	FLA	MCA	OCPD	CONDUIT FILL C	WIRE(CU)	GND(CU)	WIRING METHOD	CONNECTION TYPE/HT.	CONTROL HARDWARE (INTERNAL / EXTERNAL)	CONTROL / DATA FIELD WIRING	KEYED NOTES	COMMENTS	DATA BASIS FROM	DATE
CIVIL EQUIPMENT																					
GP-1	1	GRINDER PUMP	ADMIN FACILITY	1HP		208	1	4.6		15	1"	2#10	#10		30A/2P/NF/3R DISCONNECT	CONTROL PANEL				ARCH	07/16/26
GP-1	1	GRINDER PUMP CONTROL PANEL	ADMIN FACILITY			120	1			20	1"	2#10	#10		HARDWIRED / JBOX	REFER TO CIVIL PLANS				ARCH	07/16/26
MECHANICAL EQUIPMENT																					
AH-1	1	PACKAGED AIR CONDITIONER W/ HEAT	ADMIN BLDG		9.7	208	3	-	27	40	3/4"	3#8	#10		60A/3P/NF/3R DISCONNECT	COMBINATION MOTOR STARTER DISCONNECT				MECH EM PDF	05/07/26
OU-1 / IU-1	1	SPLIT SYSTEM (SINGLE POINT POWER)	ADMIN BLDG		2.1	208	1	-	10	15	3/4"	2#12	#12		30A/2P/NF/3R DISCONNECT			3		MECH EM PDF	05/07/26
EC-1	1	EVAPORATIVE COOLER	INSPECTION BLDG	3HP	3.1	208	3	8.6	-	15	3/4"	3#12	#12		30A/3P/3F/3R DISCONNECT	COMBINATION MOTOR STARTER DISCONNECT W/ HOA		2		MECH EM PDF	05/07/26
EC-1	1	PUMP OPERATOR	INSPECTION BLDG	200W(EST.)		120	1			20	3/4"	2#12	#12		HARDWIRED JUNCTION BOX	FRANKLIN BAS-1P STARTER		5		MECH EM PDF	05/07/26
EC-2	1	EVAPORATIVE COOLER	INSPECTION BLDG	3HP	3.1	208	3	8.6	-	15	3/4"	3#12	#12		30A/3P/3F/3R DISCONNECT	COMBINATION MOTOR STARTER DISCONNECT W/ HOA		2		MECH EM PDF	05/07/26
EC-2	1	PUMP OPERATOR	INSPECTION BLDG	200W(EST.)		120	1			20	3/4"	2#12	#12		HARDWIRED JUNCTION BOX	FRANKLIN BAS-1P STARTER		5		MECH EM PDF	05/07/26
EC-3	1	EVAPORATIVE COOLER	INSPECTION BLDG	3HP	3.1	208	3	8.6	-	15	3/4"	3#12	#12		30A/3P/NF/3R DISCONNECT	COMBINATION MOTOR STARTER DISCONNECT W/ HOA		2		MECH EM PDF	05/07/26
EC-3	1	PUMP OPERATOR	INSPECTION BLDG	200W(EST.)		120	1			20	3/4"	2#12	#12		HARDWIRED JUNCTION BOX	FRANKLIN BAS-1P STARTER		5		MECH EM PDF	05/07/26
EF-1	1	IN LINE EXHAUST FAN (INDOOR)	INSPECTION BLDG	2HP	3.4	208	3	-	9.38	20	3/4"	3#12	#12		30A/3P/NF/N1 DISCONNECT	VIA 3HP DERATED VFD		1		MECH EM PDF	05/07/26
EF-2	1	IN LINE EXHAUST FAN (INDOOR)	INSPECTION BLDG	2HP	3.4	208	3	-	9.38	20	3/4"	3#12	#12		30A/3P/NF/N1 DISCONNECT	VIA 3HP DERATED VFD		1		MECH EM PDF	05/07/26
EF-3	1	ROOF EXHAUST FAN	INSPECTION BLDG	5HP		208	3	16.7	-	35	3/4"	3#8	#10		60A/3P/NF/3R DISCONNECT	VIA 7.5HP DERATED VFD		2		MECH EM PDF	05/11/26
EF-4	1	ROOF EXHAUST FAN	INSPECTION BLDG	5HP		208	3	16.7	-	35	3/4"	3#8	#10		60A/3P/NF/3R DISCONNECT	VIA 7.5HP DERATED VFD		2		MECH EM PDF	05/11/26
GD-1,2,3,4	1	PIT LEVEL CO, NO2 GAS DETECTION SYSTEM	INSPECTION BLDG	50W(EST.)		120	1			20	3/4"	2#12	#12		HARDWIRED JUNCTION BOX			6		MECH EM PDF	05/07/26
GD-5,6	1	PIT LEVEL CO, NO2 GAS DETECTION SYSTEM	INSPECTION BLDG	50W(EST.)		120	1			20	3/4"	2#12	#12		HARDWIRED JUNCTION BOX			6		MECH EM PDF	05/07/26
UH-1	1	UNIT HEATER	INSPECTION BLDG	7500W	13.0	208	3	36	-	50	3/4"	3#8	#10		60A/3P/NF/N1 DISCONNECT			4		MECH EM PDF	05/07/26
UH-2	1	UNIT HEATER	INSPECTION BLDG	7500W	13.0	208	3	36	-	50	3/4"	3#8	#10		60A/3P/NF/N1 DISCONNECT			4		MECH EM PDF	05/07/26
UH-3	1	UNIT HEATER	INSPECTION BLDG	7500W	13.0	208	3	36	-	50	3/4"	3#8	#10		60A/3P/NF/N1 DISCONNECT			4		MECH EM PDF	05/07/26
UH-4	1	UNIT HEATER	INSPECTION BLDG	7500W	13.0	208	3	36	-	50	3/4"	3#8	#10		60A/3P/NF/N1 DISCONNECT			4		MECH EM PDF	05/07/26
UH-5	1	UNIT HEATER	INSPECTION BLDG	7500W	13.0	208	3	36	-	50	3/4"	3#8	#10		60A/3P/NF/N1 DISCONNECT			4		MECH EM PDF	05/07/26
UH-6	1	UNIT HEATER	INSPECTION BLDG	7500W	13.0	208	3	36	-	50	3/4"	3#8	#10		60A/3P/NF/N1 DISCONNECT			4		MECH EM PDF	05/07/26
UH-7	1	UNIT HEATER	INSPECTION BLDG	7500W	13.0	208	3	36	-	50	3/4"	3#8	#10		60A/3P/NF/N1 DISCONNECT			4		MECH EM PDF	05/07/26
UH-8	1	UNIT HEATER	INSPECTION BLDG	7500W	13.0	208	3	36	-	50	3/4"	3#8	#10		60A/3P/NF/N1 DISCONNECT			4		MECH EM PDF	05/07/26
PLUMBING EQUIPMENT																					
DF-1	1	DRINKING FOUNTAIN	INSPECTION BLDG	750W(EST.)	0.0	120	1			20	3/4"	2#12	#12		RECEPTACLE/GFCI					PLMB EM PDF	05/07/26
SP-1	1	SUMP PUMP	ADMIN FACILITY	1/2HP	0.5	115	1	4.4		20	3/4"	2#12	#12		HARDWIRED / J-BOX					PLMB EM PDF	05/07/26
SP-2	1	SUMP PUMP	INSPECTION BLDG	1/2HP	0.5	115	1	4.4		20	3/4"	2#12	#12		EXPLOSION PROOF J-BOX					PLMB EM PDF	05/07/26
EWS-1	1	EMERGENCY EYEWASH/FACE/SHOWER	INSPECTION BLDG	400W(EST.)		120	1			20	3/4"	2#12	#12		HARDWIRED / J-BOX					PLMB EM PDF	05/07/26
IWH-1	1	INSTANTANEOUS WATER HEATER	INSPECTION BLDG	4.8KW		208	1			30	3/4"	2#10	#10		30A/2P/NF/N1 DISCONNECT					PLMB EM PDF	05/07/26
AC-1	1	AIR COMPRESSOR	INSPECTION BLDG	5HP		208	3	16.7	-	35	3/4"	3#8	#10		30A/3P/NF/N1 DISCONNECT					PLMB EM PDF	05/07/26
CP-4	1	CONDENSATE PUMP	ADMIN FACILITY		0.5	115	1	4.4		20	3/4"	2#12	#12		HARDWIRED / J-BOX					PLMB EM PDF	05/07/26

GENERAL REQUIREMENTS:
A. REFER TO MECHANICAL PLAN SHEET M003 FOR CONTROLS SPECIFICATIONS AND SEQUENCE OF OPERATIONS (SOO).

KEYED NOTES:
1. EXHAUST FANS (1,2,3,4) SHALL BE INTERLOCKED WITH BUILDING INTERIOR LIGHTING CONTROLS, GAS DETECTION SYSTEM, AND THE HORIZONTAL COILING PIT COVER. PROVIDE 3/4" CONTROLS CONDUIT AS REQUIRED.
2. EVAP COOLERS (1,2,3) AND EXHAUST FANS (3,4) SHALL BE INTERLOCKED WITH BUILDING INTERIOR LIGHTING CONTROLS. PROVIDE 3/4" CONTROLS CONDUIT AS REQUIRED.
3. IU-1 IS CONTROLLED VIA THERMOSTAT.
4. LOCATE DISCONNECT AT GROUND LEVEL. SEE MECHANICAL PLANS. REFER TO SHOP DRAWING SUBMITTALS FOR COMPLETE REQUIREMENTS.
5. LOCATE THE MOTOR STARTER INDOOR, TYPICAL.
6. INTERLOCK GAS DETECTION SYSTEM WITH INSPECTION PIT EXHAUST FANS EF-1, EF-2. PROVIDE A REMOTE HORN/STROBE AND 3/4" CONTROLS CONDUIT AS REQUIRED.

1 EQUIPMENT SCHEDULE
NO SCALE

GENERAL NOTES - POWER

CONDUIT AND WIRE IS SHOWN DIAGRAMMATICALLY. ACTUAL ROUTING AND REQUIRED NUMBER OF SUPPORTS SHALL BE DETERMINED BY THE CONTRACTOR.

COORDINATE ALL CONSTRUCTION WITH OTHER TRADES INCLUDING LOCATION OF MECHANICAL EQUIPMENT AND ROUTING OF PIPING AND DUCTWORK.

SUPPORT ALL RACEWAYS PER NEC. INSTALL CONDUIT WITH 270 DEGREES IN BENDS MAXIMUM WITHOUT PULL POINT. INSTALL JUNCTION / PULL BOXES AS NECESSARY. WHEN SIZES ARE NOT SPECIFIED, SIZE BOXES BASED ON CONDUIT SIZES / FILL PER NEC.

VOLTAGE DROP (120V BRANCH CIRCUITS): FOR BRANCH CIRCUITS RATED 120V AND GREATER THAN 125LF IN LENGTH, INSTALL BRANCH CONDUCTORS SIZED AS FOLLOWS UNLESS NOTED OTHERWISE.

0-125LF, 2#12, #12G

125-175LF, 2#10, #10G

175-250LF, 2#8, #8G

HVAC EQUIPMENT:

DISCONNECTING MEANS: PROVIDE AND INSTALL HEAVY DUTY FUSED DISCONNECT (NEMA 3R OUTDOORS) AND SINGLE POINT POWER CONNECTION TO EQUIPMENT (UNLESS NOTED OTHERWISE). IF STARTERS ARE REQUIRED FOR MECHANICAL EQUIPMENT, ADDITIONAL REQUIREMENTS WILL BE INDICATED ON ONE-LINES, PLAN DRAWINGS, AND/OR MECHANICAL PLANS.

CONTROLS: INSTALL 3/4" CONDUIT (UNLESS NOTED OTHERWISE) FROM HVAC UNIT TO ACCESSIBLE SPACE OR CABLE TRAY FOR CONTROL WIRING TO BE INSTALLED*. COORDINATE WITH MECHANICAL AND CONTROLS CONTRACTORS ACCORDINGLY.

* THIS INCLUDES OTHER EQUIPMENT OR DEVICES WHICH ARE INTERLOCKED WITH THE MECHANICAL UNIT AND INDICATED ON THE MECHANICAL PLANS. COORDINATE RACEWAY REQUIREMENTS WITH MECHANICAL PLANS AND THE MECHANICAL CONTRACTOR. SMOKE DETECTION: WHEN THE DUCT MOUNTED SMOKE DETECTORS ARE INDICATED, PROVIDE SHUTDOWN WIRING FROM DETECTOR (PROVIDED BY MECHANICAL UNLESS NOTED OTHERWISE) TO HVAC UNIT AND VISIBLE/AUDIBLE SIGNALS IN ACCORDANCE WITH IMC SECTION 606. WHEN A FIRE ALARM SYSTEM IS PRESENT, THE DETECTOR SHALL ALSO BE CONNECTED TO THE FIRE ALARM CONTROL PANEL. PROVIDE 120V BRANCH CIRCUIT FOR DETECTOR POWER (2#12, #12G) (INCLUDING CONTROL POWER TRANSFORMER) WHEN REQUIRED. UTILIZE A DEDICATED BRANCH CIRCUIT WITH "LOCK-ON" TAB FROM 120V SOURCE.

CONTRACTOR SHALL IDENTIFY EACH INDIVIDUAL BRANCH CIRCUIT WITHIN THE PROJECT AREA BY PERMANENT MEANS. ACCEPTABLE METHODS INCLUDE USING PERMANENT MARKER ON JUNCTION BOX COVER PLATES AND BACKSIDE OF DEVICE COVER PLATES OR IDENTIFYING BRANCH WIRING WITHIN JUNCTION BOXES. STICK ON LABELS ARE NOT ACCEPTABLE. [REFERENCE ART. 408.4]

PROVIDE AND INSTALL FRANKLIN BAS-1P MOTOR STARTER WITH HAND-OFF-AUTO CONTROL.

PROVIDE AND INSTALL 120V, 20A BRANCH CIRCUIT FOR HVAC CONTROLS DEVICE(S) AS INDICATED AND AS COORDINATED WITH MECHANICAL PLANS, 3/4"C, 2#12, #12G INCLUDING JUNCTION BOX, FUSED CONTROL POWER TRANSFORMER (UNLESS PROVIDED BY OTHERS), AND FLEXIBLE CONNECTION TO DEVICE.

AREA ABOVE CEILING CONTAINS PLENUM SPACES. ALL WIRING AND DEVICES SHALL BE PLENUM RATED AND SHALL COMPLY WITH NEC ART. 300.22 (C).

VERIFY THE LOCATION OF FIRE RATED BARRIERS WITH ARCHITECTURAL DRAWINGS TO DETERMINE APPLICABLE CONDUIT PENETRATION DETAILS.

PROVIDE AND INSTALL MAINTENANCE RECEPTACLES WITHIN 25FT OF MECHANICAL EQUIPMENT, PER NEC ART. 610.23.

NEC ART. 300.4(E) CABLES, RACEWAYS, OR BOXES INSTALLED IN OR UNDER ROOF DECKING. A CABLE, RACEWAY, OR BOX, INSTALLED IN EXPOSED OR CONCEALED LOCATIONS UNDER METAL-CORRUGATED SHEET ROOF DECKING, SHALL BE INSTALLED AND SUPPORTED SO THERE IS NOT LESS THAN 38 MM (1½ IN.) MEASURED FROM THE LOWEST SURFACE OF THE ROOF DECKING TO THE TOP OF THE CABLE, RACEWAY, OR BOX. A CABLE, RACEWAY, OR BOX SHALL NOT BE INSTALLED IN CONCEALED LOCATIONS IN METAL-CORRUGATED, SHEET DECKING-TYPE ROOF.

EXCEPTION: RIGID METAL CONDUIT AND INTERMEDIATE METAL CONDUIT SHALL NOT BE REQUIRED TO COMPLY WITH THESE REQUIREMENTS.

INSTALL CONDUIT WITHIN STRUCTURES WHENEVER POSSIBLE TO AVOID CONDUIT ROUTING ON ROOFTOPS. WHEN ROUTING CONDUIT ON ROOFTOPS INSTALL COPPER DURA-BLOCK STRUT SUPPORT AT INTERVALS TO COMPLY WITH SUPPORTING DISTANCES PER NEC FOR THE CORRESPONDING RACEWAY MATERIAL.

DRY TYPE TRANSFORMERS SHALL BE RATED K-13 MINIMUM.

FEEDERS 600V AND LESS: COPPER FOR FEEDERS RATED SMALLER THAN 199A; ALUMINUM FEEDERS RATED 200A AND LARGER.

APPLIED ENGINEERING
2800 S. RURAL RD. SUITE 101
TEMPE, AZ 85282 (480)968 3070

VOLTA
1730 E. Northern Avenue, Ste. 120, Phoenix, AZ 85020
Tel. (480) 659-0511, VoltaUS.com

07.23.26

05/30/26 — National Professional Engineer Registration — CERTIFICATE NO. 30536 — WILLIAM J. BETHURUM, IV — ARIZONA U.S.A.
SEAL EXPIRES: 09/30/26

Issue Date:	10 JULY 2026	
Revisions:	Δ Description	Date

gabor lorant architects
3326 n. 3rd avenue suite 200
phoenix, arizona 85013
tel: 602.667.9090
fax: 602.667.9133
gaborlorant.com

gla Project No.: PHX21-5038-00

ARIZONA DEPARTMENT OF TRANSPORTATION
PROJECT DELIVERY AND OPERATIONS DIVISION
PROJECT MANAGEMENT GROUP
SAN SIMON PORT OF ENTRY
EQUIPMENT SCHEDULE

ROUTE I-10
MILEPOST 383
STRUCTURE NO.

F.H.W.A Arizona Division

STATE	PROJECT NO.	FEDERAL ID NO.	SHEET NO.	TOTAL SHEETS	RECORD DRAWING
ARIZ.	010 CH 383	010-F(238)T	171	200	

LOCATION: SAN SIMON PORT OF ENTRY (POE)
DWG NO. E005
TRACS NO. F0728 01C
___ OF ___

DO NOT SCALE DRAWINGS. DO NOT PLOT 'SCALE TO FIT'. THIS DOCUMENT IS FORMATTED FOR THE ANSI D (22"x34") SHEET SIZE.
FULL-SIZE PLOT ON ANSI D (22"x34") PAPER ONLY. HALF-SIZE PLOT ON 11"x17" PAPER ONLY.

STAPLE ZONE

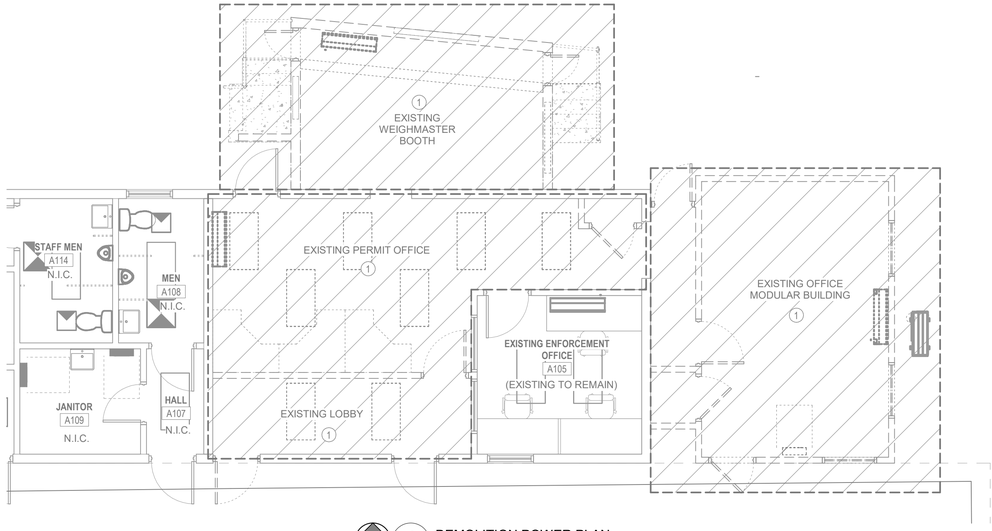

1 DEMOLITION POWER PLAN
3/16" = 1'-0"

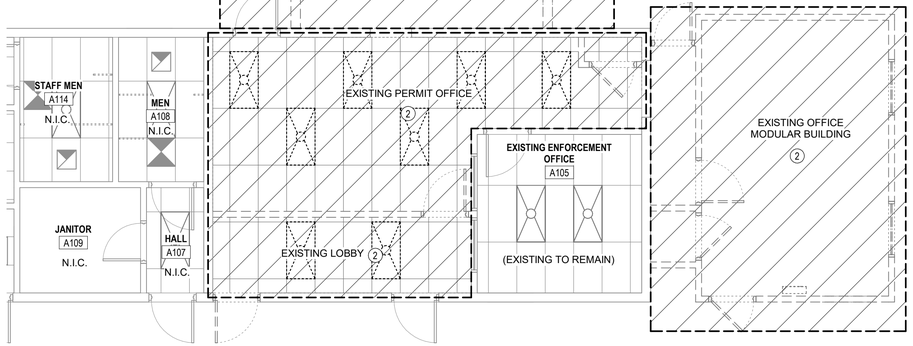

2 DEMOLITION LIGHTING PLAN
3/16" = 1'-0"

DEMOLITION NOTES

1. ANY ELECTRICAL DEVICE OR EQUIPMENT NOT NOTED TO BE REMOVED OR RELOCATED SHALL REMAIN UNCHANGED. IT SHALL BE THE CONTRACTORS RESPONSIBILITY TO CONTACT THE ARCHITECT/ENGINEER REGARDING ANY ITEM IN QUESTION.
2. WHERE ITEMS ARE NOTED TO BE REMOVED, ELECTRICAL CONTRACTOR SHALL:

   A) REMOVE INDICATED ITEM.
   B) REMOVE ANY ASSOCIATED CONDUIT AND WIRING WHERE SURFACE MOUNTED OR ABOVE AN ACCESSIBLE CEILING.
   C) PULL OUT ASSOCIATED WIRING, CUT OFF, CAP, AND ABANDON CONDUIT WHERE CONCEALED IN WALLS OR PARTITIONS WHICH ARE REMAINING.
   D) RETURN ALL REMOVED EQUIPMENT TO OWNER OR DISPOSE OF AS DIRECTED BY OWNER.
3. WHERE ELECTRICAL CONTRACTOR REMOVES AN ITEM AND CIRCUITING TO OTHER ITEMS WILL BE INTERRUPTED, ELECTRICAL CONTRACTOR SHALL PROVIDE NEW CONDUIT, WIRE, BOXES, ETC. AS REQUIRED AND RECONNECT REMAINING ITEMS SO THEY WILL NOT BE INTERRUPTED.
4. WHERE AN ITEM IS SHOWN TO BE RELOCATED, ELECTRICAL CONTRACTOR SHALL EXTEND WIRING AND CONDUIT TO THE APPROPRIATE NEW LOCATION AND PROVIDE ALL NECESSARY CONDUIT, WIRE, BOXES, ETC. AS REQUIRED. RECONNECT TO EXISTING CIRCUIT OR RECIRCUIT AS SHOWN. IF DEVICE IS NOT SALVAGEABLE, ELECTRICAL CONTRACTOR SHALL PROVIDE A NEW DEVICE.

KEYED NOTES

1 REFER TO DEMOLITION NOTES 1, 3 & 4 ABOVE. RESUSE BRANCH WIRING WHERE POSSIBLE.
2 ALL EXISTING LIGHTING CONTROLS WITH IN THIS AREA TO BE DEMOLISHED.

APPLIED ENGINEERING
2890 S. RURAL RD. SUITE 101
TEMPE, AZ 85282 (480)968 3070

VOLTA
1730 E. Northern Avenue, Ste 120, Phoenix, AZ 85020
Tel. (480) 659-0511, VoltaUS.com

09/30/26 Registered Professional Engineer, State of Arizona CERTIFICATE NO. 30536 WILLIAM J. BETHURUM, IV
SEAL EXPIRY: 09/30/26

Issue Date:	10 JULY 2026	
Revisions:	Δ Description	Date

gabor lorant architects
3326 n. 3rd avenue suite 200
phoenix, arizona 85013
tel: 602.667.9090
fax: 602.667.9133
gaborlorant.com
gla Project No.: PHX21-5038-00

ARIZONA DEPARTMENT OF TRANSPORTATION
PROJECT DELIVERY AND OPERATIONS DIVISION
PROJECT MANAGEMENT GROUP

SAN SIMON PORT OF ENTRY
ELECTRICAL DEMOLITION PLANS - ADMIN BUILDING

ROUTE	MILEPOST	STRUCTURE NO.
I-10	383	

F.H.W.A Arizona Division	STATE	PROJECT NO.	FEDERAL ID NO.	SHEET NO.	TOTAL SHEETS	RECORD DRAWING
	ARIZ.	010 CH 383	010-F(238)T	172	200	

LOCATION: SAN SIMON PORT OF ENTRY (POE)

TRACS NO. F0728 01C

DWG NO. **E030**

___ OF ___

7/23/2026 9:18:56 PM

DO NOT SCALE DRAWINGS. DO NOT PLOT 'SCALE TO FIT'. THIS DOCUMENT IS FORMATTED FOR THE ANSI D (22"x34") SHEET SIZE.
FULL-SIZE PLOT ON ANSI D (22"x34") PAPER ONLY. HALF-SIZE PLOT ON 11"x17" PAPER ONLY.

STAPLE ZONE

KEYED NOTES

1 EXISTING ELECTRICAL TO REMAIN
2 COORDINATE FINAL LOCATION WITH ARCHITECTURAL AND CIVIL DRAWINGS.
3 ALL FIBER OPTIC CONDUIT BENDS SHALL BE LONG-RADIUS SWEEPS WITH A MINIMUM 36-INCH RADIUS. SHORT-RADIUS ELBOWS ARE NOT PERMITTED. FIELD-BENT CONDUIT SHALL MAINTAIN THIS MINIMUM RADIUS.
4 (2) 4" I.T. CONDUITS WITH SWEEPS AT EACH END FOR FIBER FEEDS TO MDF ROOM.
5 3/4"C, 2#10(CU), 1#10(CU)G UNDER SEPARATE ZONE
6 CAMERAS J-BOX(ES)/CONDUITS ROUGH-IN (3/4"C TO ACCESSIBLE SPACE). REFER TO CIVIL DRAWINGS FOR FINAL LOCATIONS, MORE DETAILS AND SCOPE, TYPICAL.

GENERAL NOTES

A. REFER TO ELECTRICAL LEGEND AND SPECIFICATIONS FOR ADDITIONAL INFORMATION.

B. UTILITY SERVICE (TELEPHONE/CABLE/POWER) - COORDINATE ALL SERVICE REQUIREMENTS WITH UTILITY. PROVIDE AND INSTALL ALL NECESSARY TRENCHING CONDUITS, JUNCTION BOXES, AND ALL ELSE AS REQUIRED PER UTILITY SPECIFICATIONS.

C. EXTERIOR RECEPTACLES SHALL BE IN-USE WEATHERPROOF COVER, NEMA 3R, SINGLE GANG, VERTICAL DEEP WITH METAL COVER & IDENTIFY AS "EXTRA DUTY" PER NEC ART. 406.9. SEE E0.1 FOR SPECS.

LEGEND

REFER TO EQUIPMENT SCHEDULE FOR CONNECTION TYPE AND RATING, CONDUIT FILL AND ADDITIONAL BRANCH CIRCUIT REQUIREMENTS.

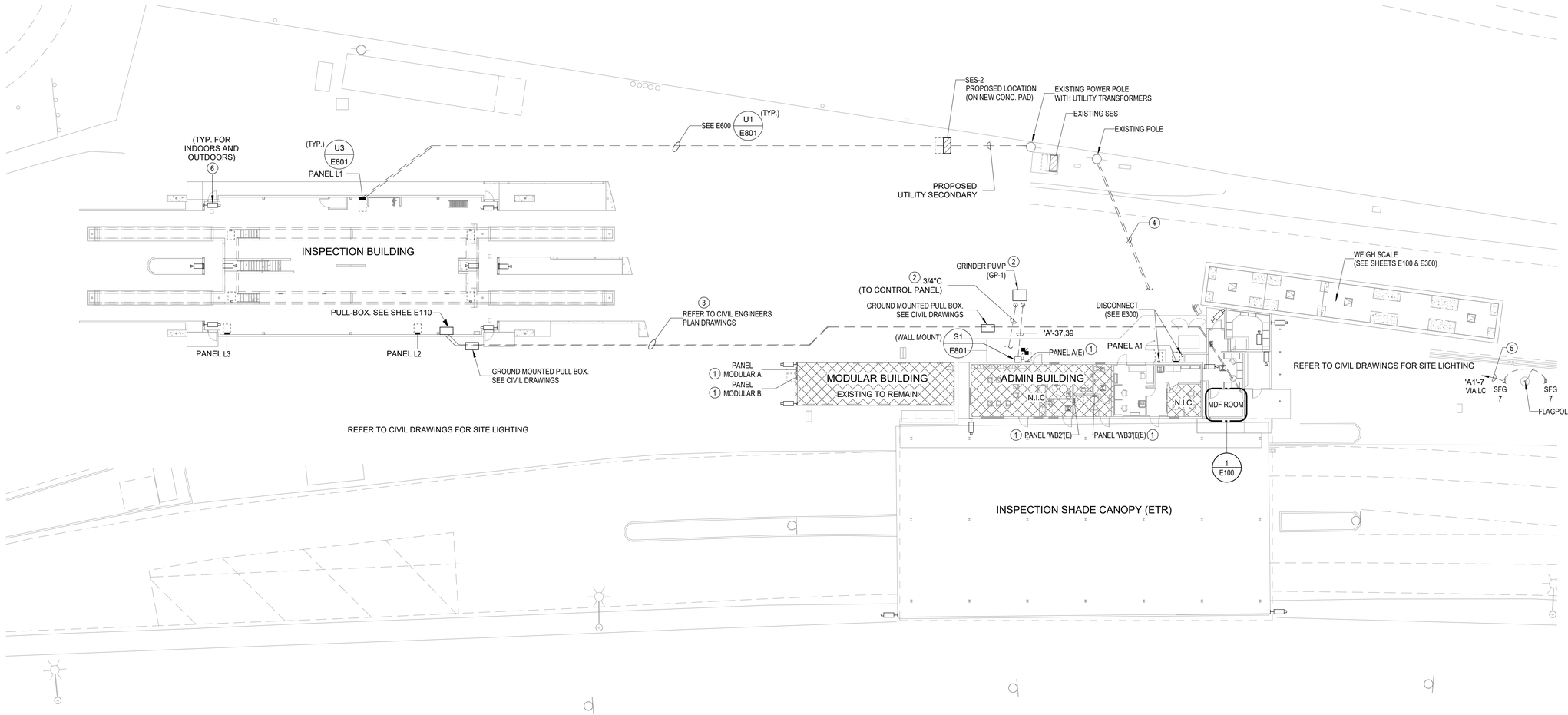

1 ELECTRICAL SITE PLAN
1" = 20'-0"

APPLIED ENGINEERING
2800 S. RURAL RD. SUITE 101
TEMPE, AZ 85282 (480)968 3070

VOLTA
1730 E. Northern Avenue, Ste. 120, Phoenix, AZ 85020
Tel. (480) 659-0511, VoltaUS.com

Call at least two full working days before you begin excavation.
ARIZONA 811 Arizona Blue Stake, Inc.
Dial 8-1-1 or 1-800-STAKE-IT (782-5348)
in Maricopa County: (602) 263-1100

09/30/26 Registered Professional Engineer (Electrical) CERTIFICATE NO. 30536 WILLIAM J. BETHURUM, IV STATE OF ARIZONA
SEAL EXPIRY: 09/30/26

Issue Date:	10 JULY 2026	
Revisions:	# Description	Date

gabor lorant architects
3336 n. 3rd avenue suite 200
phoenix, arizona 85013
tel: 602.667.9090
fax: 602.667.9133
gaborlorant.com
gla Project No.: PHX21-5038-00

ARIZONA DEPARTMENT OF TRANSPORTATION
PROJECT DELIVERY AND OPERATIONS DIVISION
PROJECT MANAGEMENT GROUP

SAN SIMON PORT OF ENTRY
ELECTRICAL SITE PLAN

ROUTE I-10
MILEPOST 383
STRUCTURE NO.

F.H.W.A Arizona Division	STATE	PROJECT NO.	FEDERAL ID NO.	SHEET NO.	TOTAL SHEETS	RECORD DRAWING
	ARIZ.	010 CH 383	010-F(238)T	173	200	

LOCATION SAN SIMON PORT OF ENTRY (POE)
DWG NO. E070
TRACS NO. F0728 01C
___ OF ___

7/23/2026 9:18:57 PM

DO NOT SCALE DRAWINGS. DO NOT PLOT 'SCALE TO FIT'. THIS DOCUMENT IS FORMATTED FOR THE ANSI D (22"x34") SHEET SIZE.
FULL-SIZE PLOT ON ANSI D (22"x34") PAPER ONLY. HALF-SIZE PLOT ON 11"x17" PAPER ONLY.

STAPLE ZONE

LEGEND

REFER TO EQUIPMENT SCHEDULE FOR CONNECTION TYPE AND RATING, CONDUIT FILL AND ADDITIONAL BRANCH CIRCUIT REQUIREMENTS.

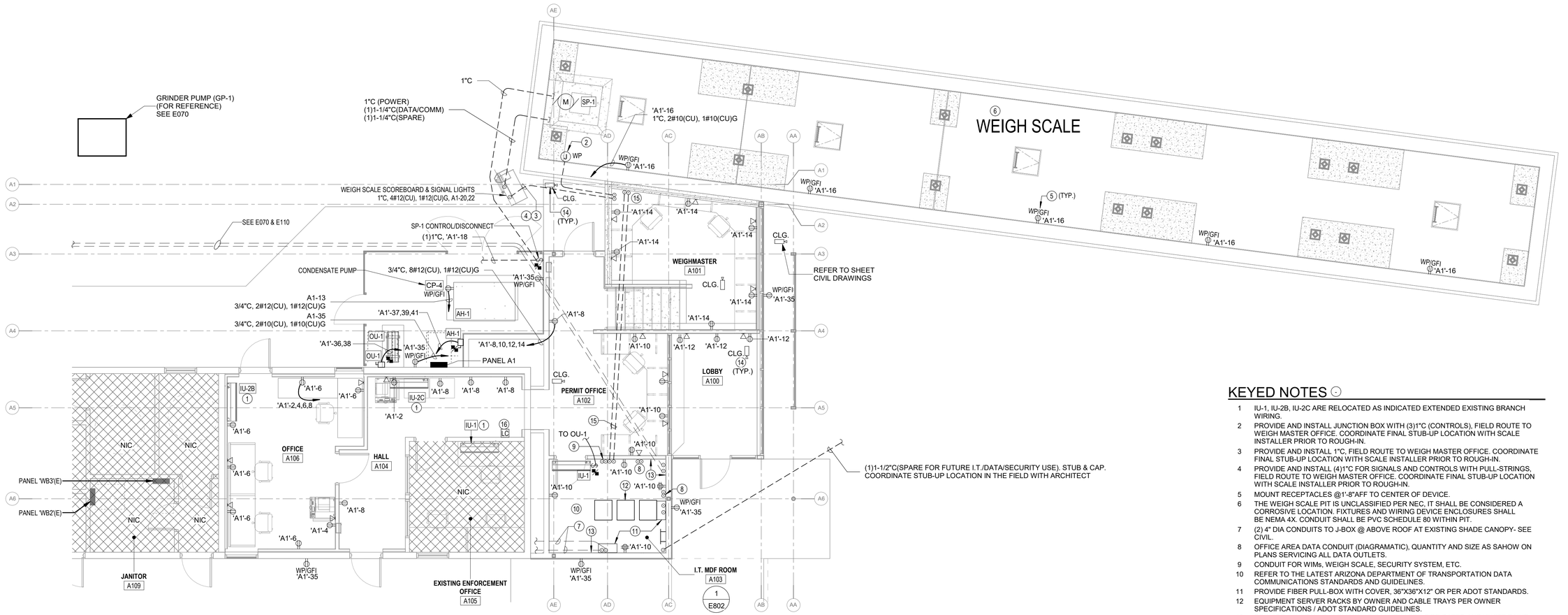

1 POWER & SPECIAL SYSTEMS PLAN - ADMIN BUILDING & WEIGHT SCALE
3/16" = 1'-0"

KEYED NOTES

1. IU-1, IU-2B, IU-2C ARE RELOCATED AS INDICATED EXTENDED EXISTING BRANCH WIRING.
2. PROVIDE AND INSTALL JUNCTION BOX WITH (3)1"C (CONTROLS), FIELD ROUTE TO WEIGH MASTER OFFICE. COORDINATE FINAL STUB-UP LOCATION WITH SCALE INSTALLER PRIOR TO ROUGH-IN.
3. PROVIDE AND INSTALL 1"C, FIELD ROUTE TO WEIGH MASTER OFFICE. COORDINATE FINAL STUB-UP LOCATION WITH SCALE INSTALLER PRIOR TO ROUGH-IN.
4. PROVIDE AND INSTALL (4)1"C FOR SIGNALS AND CONTROLS WITH PULL-STRINGS, FIELD ROUTE TO WEIGH MASTER OFFICE. COORDINATE FINAL STUB-UP LOCATION WITH SCALE INSTALLER PRIOR TO ROUGH-IN.
5. MOUNT RECEPTACLES @1'-8"AFF TO CENTER OF DEVICE.
6. THE WEIGH SCALE PIT IS UNCLASSIFIED PER NEC, IT SHALL BE CONSIDERED A CORROSIVE LOCATION. FIXTURES AND WIRING DEVICE ENCLOSURES SHALL BE NEMA 4X. CONDUIT SHALL BE PVC SCHEDULE 80 WITHIN PIT.
7. (2) 4" DIA CONDUITS TO J-BOX @ ABOVE ROOF AT EXISTING SHADE CANOPY- SEE CIVIL.
8. OFFICE AREA DATA CONDUIT (DIAGRAMATIC), QUANTITY AND SIZE AS SAHOW ON PLANS SERVICING ALL DATA OUTLETS.
9. CONDUIT FOR WIMs, WEIGH SCALE, SECURITY SYSTEM, ETC.
10. REFER TO THE LATEST ARIZONA DEPARTMENT OF TRANSPORTATION DATA COMMUNICATIONS STANDARDS AND GUIDELINES.
11. PROVIDE FIBER PULL-BOX WITH COVER, 36"X36"X12" OR PER ADOT STANDARDS.
12. EQUIPMENT SERVER RACKS BY OWNER AND CABLE TRAYS PER OWNER SPECIFICATIONS / ADOT STANDARD GUIDELINES.
13. PROVIDE & INSTALL 3/4" PLYWOOD BACKBOARDS FIRE RATED AND WHITE PAINT FIRE RATED, BOTTOM EDGE OF PLYWOOD, 24"AFF AT NORTH, EAST AND SOUTH WALLS. FULL HEIGHT.
14. CAMERAS INDICATED FOR IN ONLY (3/4"C TO ACCESSIBLE SPACE). COORDINATE FINAL LOCATION IN THE FIELD WITH ARCHITECT PRIOR TO ROUGH-IN.
15. PROVIDE AND INSTALL (2) 4"C, ROUTE UNDERFLOOR BETWEEN WEIGHMASTER AND I.T. MDF ROOM.
16. LIGHTING CONTROL PANEL 'LC'. COORDINATE FINAL LOCATION IN THE FIELD WITH ARCHITECT.

APPLIED ENGINEERING
2800 S. RURAL RD. SUITE 101
TEMPE, AZ 85282 (480)968 3070

VOLTA
1730 E. Northern Avenue, Ste. 120, Phoenix, AZ 85020
Tel. (480) 659-0511, VoltaUS.com

Dec 30 '05
Registered Professional Engineer
CERTIFICATE NO.
30536
WILLIAM J. BETHURUM, IV
STATE OF ARIZONA
SEAL EXPIRY: 09/30/26

Issue Date:	10 JULY 2026	
Revisions:	# Description	Date

gabor lorant architects
3326 n. 3rd avenue suite 200
phoenix, arizona 85013
tel: 602.667.9090
fax: 602.667.9133
gaborlorant.com
gla Project No.: PHX21-5038-00

ARIZONA DEPARTMENT OF TRANSPORTATION
PROJECT DELIVERY AND OPERATIONS DIVISION
PROJECT MANAGEMENT GROUP

SAN SIMON PORT OF ENTRY
POWER PLAN ADMIN BUILDING ADDITION & WEIGH SCALE

ROUTE I-10
MILEPOST 383
STRUCTURE NO.

F.H.W.A Arizona Division	STATE	PROJECT NO.	FEDERAL ID NO.	SHEET NO.	TOTAL SHEETS	RECORD DRAWING
	ARIZ.	010 CH 383	010-F(238)T	174	200	

LOCATION: SAN SIMON PORT OF ENTRY (POE)
TRACS NO. F0728 01C
DWG NO. **E100**
___ OF ___

7/23/2026 9:18:58 PM

DO NOT SCALE DRAWINGS. DO NOT PLOT 'SCALE TO FIT'. THIS DOCUMENT IS FORMATTED FOR THE ANSI D (22"x34") SHEET SIZE.
FULL-SIZE PLOT ON ANSI D (22"x34") PAPER ONLY. HALF-SIZE PLOT ON 11"x17" PAPER ONLY.

STAPLE ZONE

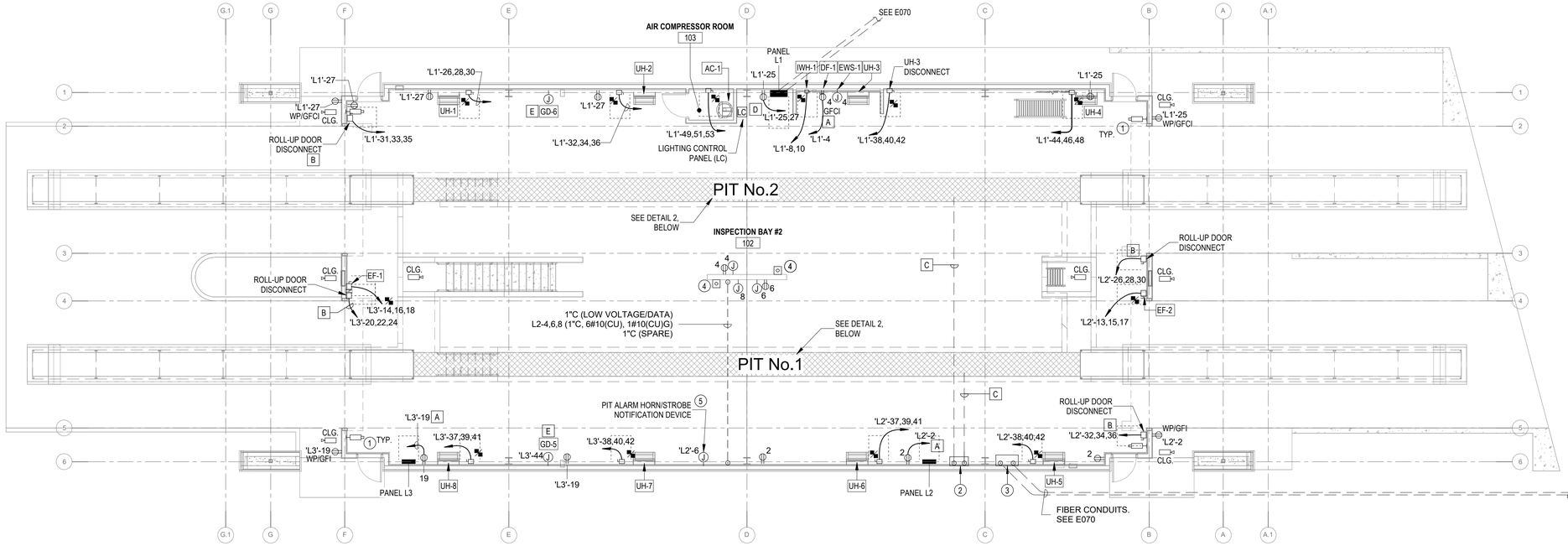

1 POWER & SPECIAL SYSTEM PLAN - INSPECTION BUILDING
1/8" = 1'-0"

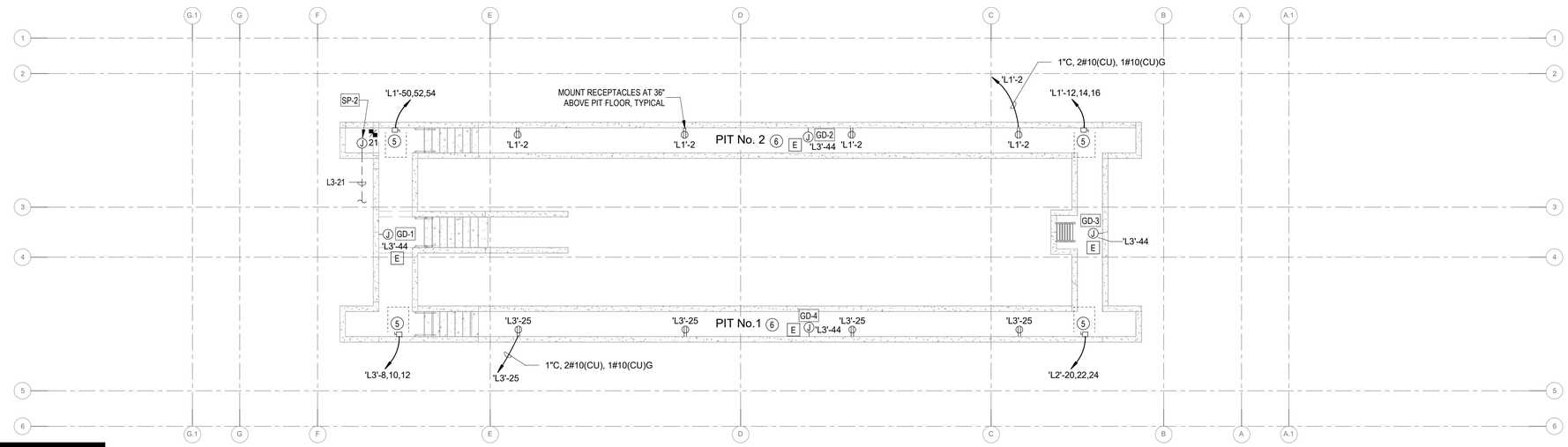

2 POWER PLAN - INSPECTION BUILDING PIT LEVEL
1/8" = 1'-0"

LEGEND

REFER TO EQUIPMENT SCHEDULE FOR CONNECTION TYPE AND RATING, CONDUIT FILL AND ADDITIONAL BRANCH CIRCUIT REQUIREMENTS.

KEYED NOTES

1 CAMERAS INDICATED FOR IN ONLY (3/4"C TO ACCESSIBLE SPACE). COORDINATE FINAL LOCATION IN THE FIELD WITH ARCHITECT PRIOR TO ROUGH-IN.

2 PULL-BOX WITH COVER. 18"X18"X6", NEMA 1 OR EQUAL.

3 FIBER PULL-BOX WITH COVER. 36"X36"X12", NEMA 1 OR EQUAL.

4 PIT GRATE COVER PUSH BUTTON OPERATORS (TWO PER PIT).

5 PROVIDE AND INSTALL UL 508 LISTED CONTROL PANEL WITH ALL DEVICES, RACEWAYS, AND CONTROL WIRING REQUIRED FOR A COMPLETE AND OPERATIONAL PIT COVER ALARM SYSTEM. UL 508 PANEL DESIGN, FABRICATION, AND LISTING ARE THE CONTRACTOR'S RESPONSIBILITY. SUBMIT CONTROL PANEL SHOP DRAWINGS FOR ENGINEER AND OWNER REVIEW AND APPROVAL.

SCOPE OF WORK:

- PROVIDE 30A/3P, NEMA 4X COMBINATION MOTOR STARTER FOR EACH MOTORIZED GRATE PIT COVER (TWO PER PIT). (2) 1"C, 3#10(CU), 1#10(CU)G. TYPICAL FOR EACH OF THE NORTH AND SOUTH PITS.
- PROVIDE AND INSTALL HARDWARE TO OPEN AND CLOSE PIT COVERS.
- PROVIDE YELLOW FLASHING LIGHTS, WALL-MOUNTED, COORDINATE WITH OWNER REPRESENTATIVE.
- PROVIDE ABOVE-GROUND STROBE (VISUAL) ALARM (NO AUDIBLE ALARM PER ADOT).
- INTERLOCK STARTER AUXILIARY CONTACT WITH ALARM DEVICES.

SEQUENCE OF OPERATION:
- YELLOW LIGHT SHALL FLASH WHILE PIT COVER IS OPENING OR CLOSING.
- DELAY COVER MOVEMENT 2 TO 5 SECONDS WHILE ALARM FLASHES PRIOR TO MOTION.

INDEPENDENT OPERATION:

- (4) FOUR PIT COVERS TOTAL (TWO PER PIT, PARTING FROM CENTER), EACH OPERATING INDEPENDENTLY.
- ALARM DEVICES SHALL BE WIRED SO EACH COVER'S ALARM FUNCTION INDEPENDENTLY OF THE OTHERS.

6 THE INSPECTION PIT IS UNCLASSIFIED PER NEC. IT SHALL BE CONSIDERED A CORROSIVE LOCATION. FIXTURES AND WIRING DEVICE ENCLOSURES SHALL BE NEMA 4X. CONDUIT SHALL BE PVC SCHEDULE 80 WITHIN PIT. NOTE THAT THE PIT IS VENTILATED WITHIN 12" OF FLOOR DURING OCCUPIED TIMES AND CFM PER MINIMUM CODE REQUIREMENTS.

CONDUIT LEGEND

REFER TO POWER PLANS FOR SERVICE DESIGNATION. NOTE EACH LEGEND CAN BE UTILIZED MORE THAN ONCE.

A. 3/4"C, 2#10(CU), 1#10(CU)G.
B. 3/4"C, 3#10(CU), 1#10(CU)G.
C. (2) 3/4"C (LOW VOLTAGE). STUB INTO PIT.
D. 3/4"C, 4#10(CU), 1#10(CU)G.
E. 3/4"C, 2#12(CU), 1#12(CU)G.

APPLIED ENGINEERING
2800 S. RURAL RD. SUITE 101
TEMPE, AZ 85282 (480)968 3070

VOLTA
1730 E. Northern Avenue, Ste. 120, Phoenix, AZ 85020
Tel. (480) 659-0511, VoltaUS.com

09/22/20 Registered Professional Engineer (Specialty) CERTIFICATE NO. 30536 WILLIAM J. BETHURUM, IV
SEAL EXPIRY: 09/30/23

Issue Date:	22 SEPTEMBER 2026	
Revisions:	# Description	Date

gabor lorant architects
3326 n. 3rd avenue suite 200
phoenix, arizona 85013
tel: 602.667.9090
fax: 602.667.9133
gaborlorant.com
gla Project No.: PHX21-5038-00

ARIZONA DEPARTMENT OF TRANSPORTATION
PROJECT DELIVERY AND OPERATIONS DIVISION
PROJECT MANAGEMENT GROUP

SAN SIMON PORT OF ENTRY
POWER PLANS INSPECTION BUILDING

ROUTE I-10
MILEPOST 383
STRUCTURE NO.

F.H.W.A Arizona Division	STATE	PROJECT NO.	FEDERAL ID NO.	SHEET NO.	TOTAL SHEETS	RECORD DRAWING
	ARIZ.	010 CH 383	010-F(238)T	175	200	

LOCATION SAN SIMON PORT OF ENTRY (POE)

TRACS NO. F0728 01C

DWG NO. **E110**
___ OF ___

9/22/2026 4:58:44 PM

DO NOT SCALE DRAWINGS. DO NOT PLOT 'SCALE TO FIT'. THIS DOCUMENT IS FORMATTED FOR THE ANSI D (22"x34") SHEET SIZE.
FULL-SIZE PLOT ON ANSI D (22"x34") PAPER ONLY. HALF-SIZE PLOT ON 11"x17" PAPER ONLY.

STAPLE ZONE

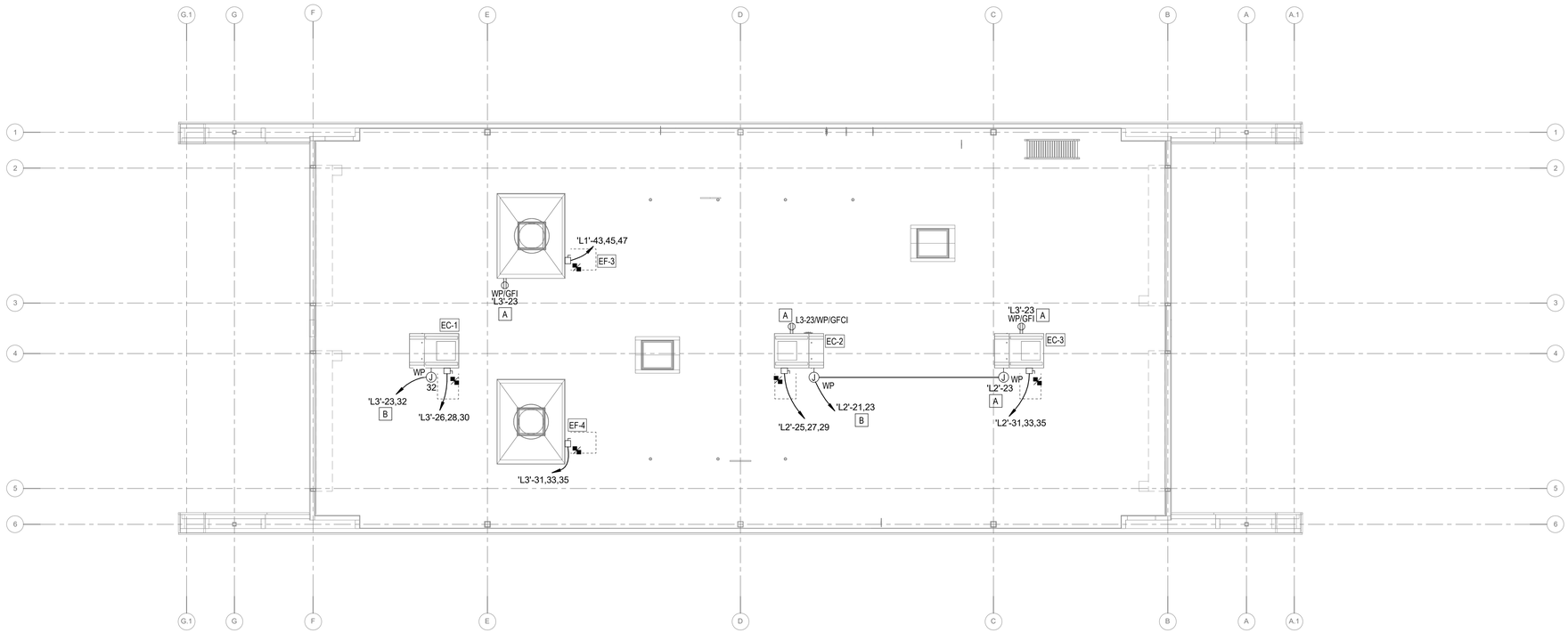

1 ROOF POWER PLAN - INSPECTION BUILDING
1/8" = 1'-0"

LEGEND

REFER TO EQUIPMENT SCHEDULE FOR CONNECTION TYPE AND RATING, CONDUIT FILL AND ADDITIONAL BRANCH CIRCUIT REQUIREMENTS.

CONDUIT LEGEND -

REFER TO POWER PLANS FOR SERVICE DESIGNATION. NOTE EACH LEGEND CAN BE UTILIZED MORE THAN ONCE.

A. 3/4"C, 2#10(CU), 1#10(CU)G.
B. 3/4"C, 4#10(CU), 1#10(CU)G.

APPLIED ENGINEERING
2800 S. RURAL RD. SUITE 101
TEMPE, AZ 85282 (480)968 3070

VOLTA
1730 E. Northern Avenue, Ste. 120, Phoenix, AZ 85020
Tel. (480) 659-0511, VoltaUS.com

Dec 30/26
Registered Professional Engineer (Electrical)
CERTIFICATE NO.
30536
WILLIAM J.
BETHURUM, IV
ARIZONA U.S.A.
SEAL EXPIRY: 09/30/26

Issue Date:	10 JULY 2026	
Revisions:	# Description	Date

gabor lorant architects
3326 n. 3rd avenue suite 200
phoenix, arizona 85013
tel: 602.667.9090
fax: 602.667.9133
gaborlorant.com

gla Project No.: PHX21-5038-00

ARIZONA DEPARTMENT OF TRANSPORTATION
PROJECT DELIVERY AND OPERATIONS DIVISION
PROJECT MANAGEMENT GROUP

SAN SIMON PORT OF ENTRY
ROOF POWER PLAN INSPECTION BUILDING

ROUTE	MILEPOST	STRUCTURE NO.
I-10	383	

F.H.W.A Arizona Division	STATE	PROJECT NO.	FEDERAL ID NO.	SHEET NO.	TOTAL SHEETS	RECORD DRAWING
	ARIZ.	010 CH 383	010-F(238)T	176	200	

LOCATION: SAN SIMON PORT OF ENTRY (POE)

TRACS NO. F0728 01C

DWG NO. **E210**

___ OF ___

7/23/2026 9:18:59 PM

DO NOT SCALE DRAWINGS. DO NOT PLOT 'SCALE TO FIT'. THIS DOCUMENT IS FORMATTED FOR THE ANSI D (22"x34") SHEET SIZE. FULL-SIZE PLOT ON ANSI D (22"x34") PAPER ONLY. HALF-SIZE PLOT ON 11"x17" PAPER ONLY.

STAPLE ZONE

KEYED NOTES

1. SHADED AREA IS NOT IN CONTRACT.
2. THE WEIGH SCALE PIT IS UNCLASSIFIED PER NEC, IT SHALL BE CONSIDERED A CORROSIVE LOCATION. FIXTURES AND WIRING DEVICE ENCLOSURES SHALL BE NEMA 4X. CONDUIT SHALL BE PVC SCHEDULE 80 WITHIN PIT.
4. PROVIDE SINGLE GANG WITH MULTI-ZONES. (x=PIT LIGHTING, y=FLAG POLE LIGHTING, e=office lighting). THE CONTROLS MAY BE SINGLE GANG WITH MULTI-ZONES OR SINGLE GANG PER EACH ZONES.
5. TYPE NS/NSE PENDANT MOUNTED AT 10' A.F.F. FROM THE CEILING THAT'S ATTACHED JUST BELOW THE STRUCTURE ABOVE.
6. TYPE LS4/LS4E MOUNTED TO UNDERSIDE OF ROOF DECK. AVOID BEAM AT GRIDLINE A6.

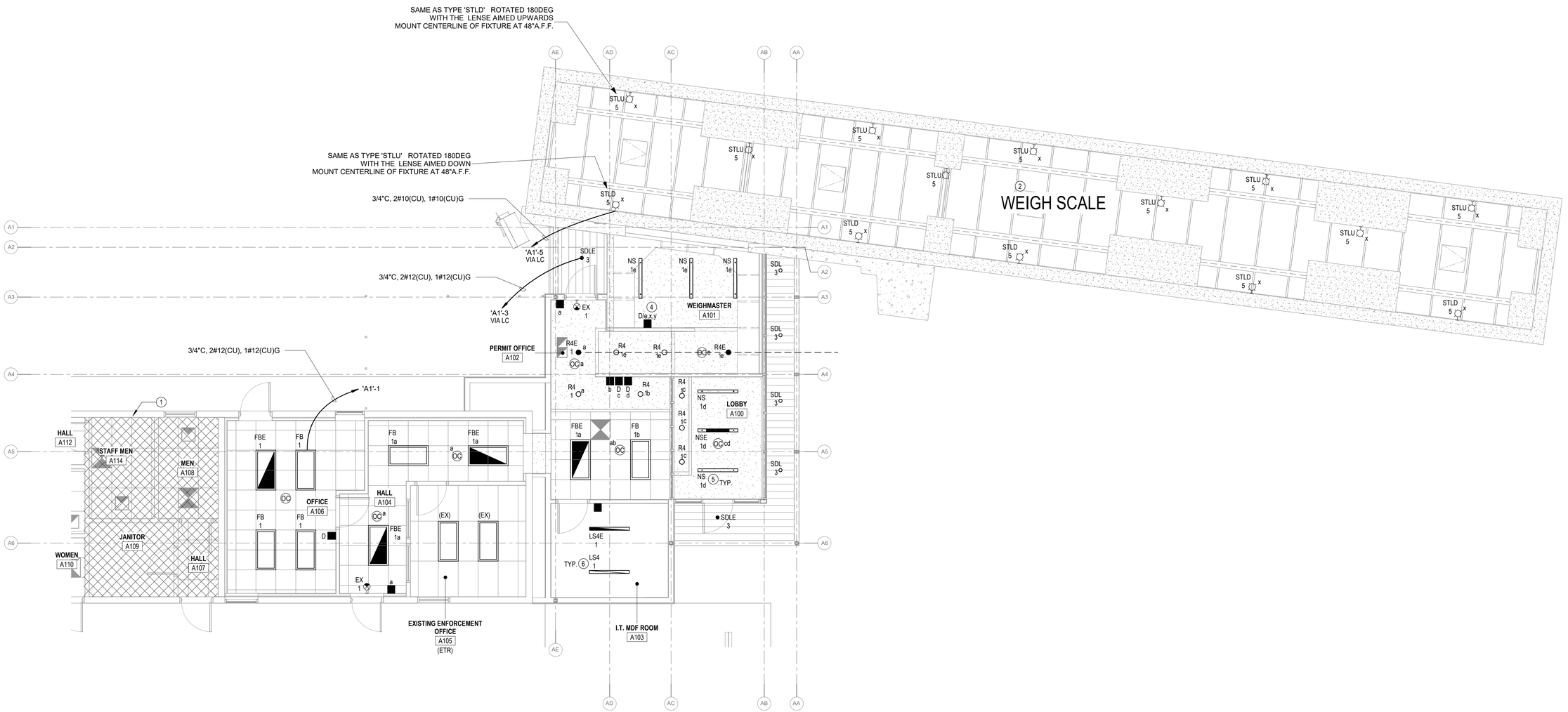

1 LIGHTING PLAN ADMIN BUILDING ADDITION
3/16" = 1'-0"

APPLIED ENGINEERING
2800 S. RURAL RD. SUITE 101
TEMPE, AZ 85282 (480)968 3070

VOLTA
1730 E. Northern Avenue, Ste. 120, Phoenix, AZ 85020
Tel. (480) 659-0511, VoltaUS.com

06/30/26
Registered Professional Engineer (Electrical)
CERTIFICATE NO. 30536
WILLIAM J. BETHURUM, IV
Date Signed 09/30/26
ARIZONA, U.S.A.
SEAL EXPIRY: 09/30/26

Issue Date:	10 JULY 2026	
Revisions:	# Description	Date

gabor lorant architects
3326 n. 3rd avenue suite 200
phoenix, arizona 85013
tel: 602.667.9090
fax: 602.667.9133
gaborlorant.com

gla Project No.: PHX21-5038-00

gla

ARIZONA DEPARTMENT OF TRANSPORTATION
PROJECT DELIVERY AND OPERATIONS DIVISION
PROJECT MANAGEMENT GROUP

SAN SIMON PORT OF ENTRY
LIGHTING PLAN ADMIN BUILDING ADDITION

ROUTE	F.H.W.A Arizona Division	STATE	PROJECT NO.	FEDERAL ID NO.	SHEET NO.	TOTAL SHEETS	RECORD DRAWING
I-10		ARIZ.	010 CH 383	010-F(238)T	177	200	
MILEPOST 383	LOCATION: SAN SIMON PORT OF ENTRY (POE)						DWG NO. E300
STRUCTURE NO.	TRACS NO. F0728 01C						___ OF ___

7/23/2026 9:19:00 PM

DO NOT SCALE DRAWINGS. DO NOT PLOT 'SCALE TO FIT'. THIS DOCUMENT IS FORMATTED FOR THE ANSI D (22"x34") SHEET SIZE.
FULL-SIZE PLOT ON ANSI D (22"x34") PAPER ONLY. HALF-SIZE PLOT ON 11"x17" PAPER ONLY.

STAPLE ZONE

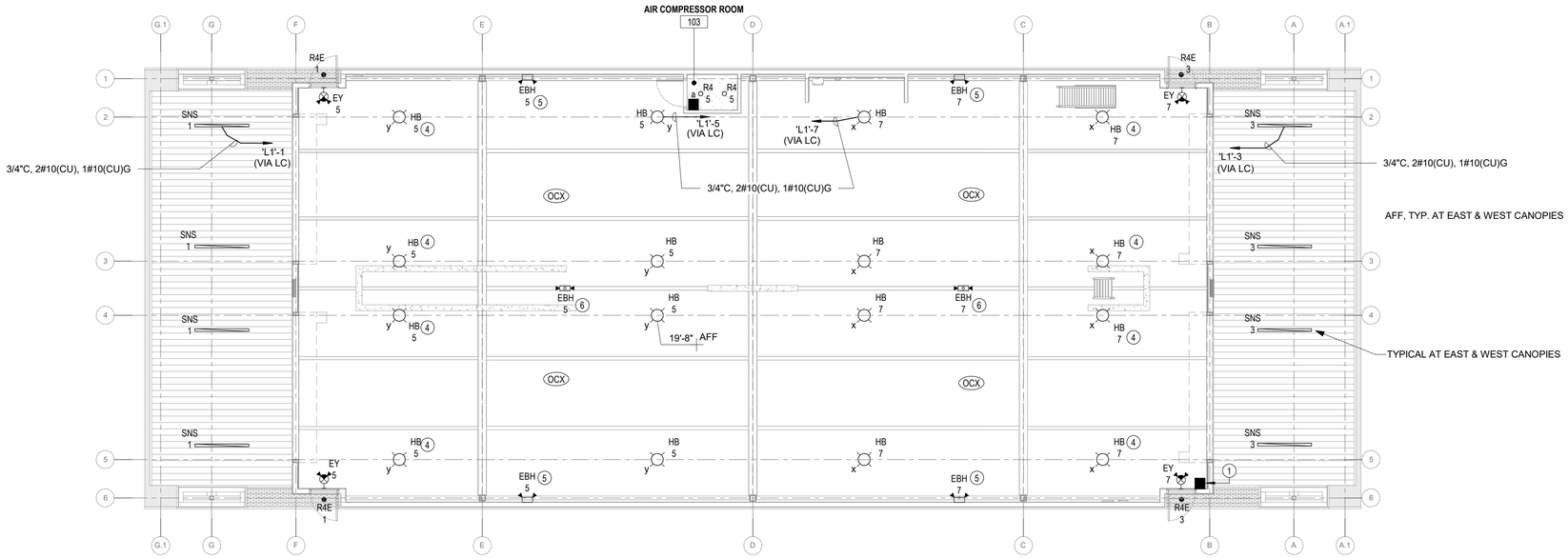

1 LIGHTING PLAN INSPECTION BUILDING
1/8" = 1'-0"

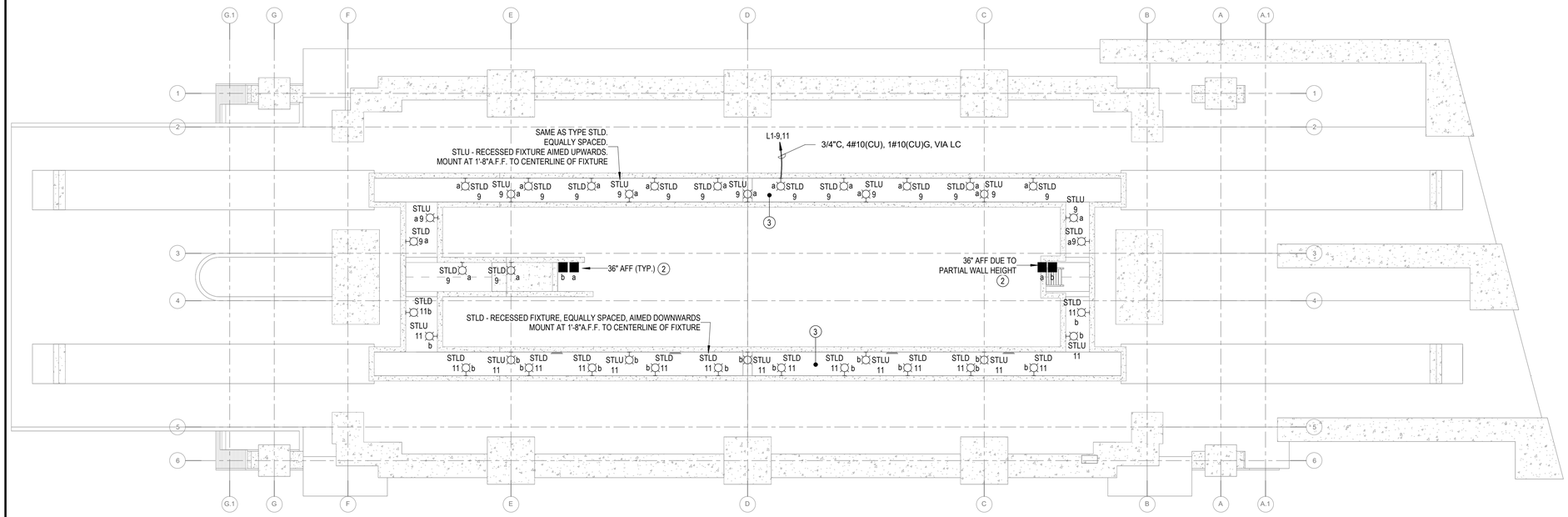

2 PARTIAL LIGHTING PLAN INSPECTION PIT
1/8" = 1'-0"

KEYED NOTES

1. INSPECTION BAY LIGHTING TO BE CONTROLLED BY HIGH-BAY OCCUPANCY SENSOR WITH MANUAL OVERRIDE SWITCH AT BAY ENTRY. LIGHTING SHALL TURN OFF WITHIN 20 MINUTES OF VACANCY VIA TIME-CLOCK.
2. PIT LIGHTING CONTROLLED VIA MANUAL SWITCH S-2 LOCATED AT PIT ENTRY. SWITCH SHALL BE ACCESSIBLE FROM TOP SIDE OF PIT LADDER OR STAIR. LIGHTING TO REMAIN INDEPENDENT OF GENERAL BAY LIGHTING. TWO SWITCHES (1 FOR ZONE "a" AND 1 FOR ZONE "b"), EACH AT STAIR & SHIPS LADDER.
3. THE INSPECTION PIT IS UNCLASSIFIED PER NEC, IT SHALL BE CONSIDERED A CORROSIVE LOCATION. FIXTURES AND WIRING DEVICE ENCLOSURES SHALL BE NEMA 4X. CONDUIT SHALL BE PVC SCHEDULE 80 WITHIN PIT.
4. RUN CONDUIT ON CEILING CENTERLINE OF BOTTOM FLANGE OF EAST/WEST STEEL BEAM DIRECTLY OVER LIGHT FIXTURES. ATTACH TO FLANGE OF NORTH/SOUTH BEAMS TO REACH WALL & ELECTRICAL PANEL.
5. WALL MOUNT FIXTURE WITH CENTERLINE OF FIXTURE 16' A.F.F.
6. SURFACE MOUNT LIGHT FIXTURE TO UNDERSIDE OF METAL ROOF DECK.

APPLIED ENGINEERING
2800 S. RURAL RD. SUITE 101
TEMPE, AZ 85282 (480)968 3070

VOLTA
1730 E. Northern Avenue, Ste. 120, Phoenix, AZ 85020
Tel. (480) 659-0511, VoltaUS.com

06/30/26
Registered Professional Engineer (Electrical)
CERTIFICATE NO. 30536
WILLIAM J. BETHURUM, IV
Date Signed 09/30/26
ARIZONA, U.S.A.
SEAL EXPIRY: 09/30/26

Issue Date:	10 JULY 2026	
Revisions:	# Description	Date

gabor lorant architects
3326 n. 3rd avenue suite 200
phoenix, arizona 85013
tel: 602.667.9090
fax: 602.667.9133
gaborlorant.com

gla Project No.: PHX21-5038-00

gla

ARIZONA DEPARTMENT OF TRANSPORTATION
PROJECT DELIVERY AND OPERATIONS DIVISION
PROJECT MANAGEMENT GROUP

SAN SIMON PORT OF ENTRY
LIGHTING PLANS INSPECTION BUILDING

ROUTE	F.H.W.A Arizona Division	STATE	PROJECT NO.	FEDERAL ID NO.	SHEET NO.	TOTAL SHEETS	RECORD DRAWING
I-10		ARIZ.	010 CH 383	010-F(238)T	178	200	
MILEPOST 383	LOCATION: SAN SIMON PORT OF ENTRY (POE)						DWG NO. E310
STRUCTURE NO.	TRACS NO. F0728 01C						___ OF ___

7/23/2026 9:19:02 PM

DO NOT SCALE DRAWINGS. DO NOT PLOT "SCALE TO FIT". THIS DOCUMENT IS FORMATTED FOR THE ANSI D (22"x34") SHEET SIZE.
FULL-SIZE PLOT ON ANSI D (22"x34") PAPER ONLY. HALF-SIZE PLOT ON 11"x17" PAPER ONLY.

STAPLE ZONE

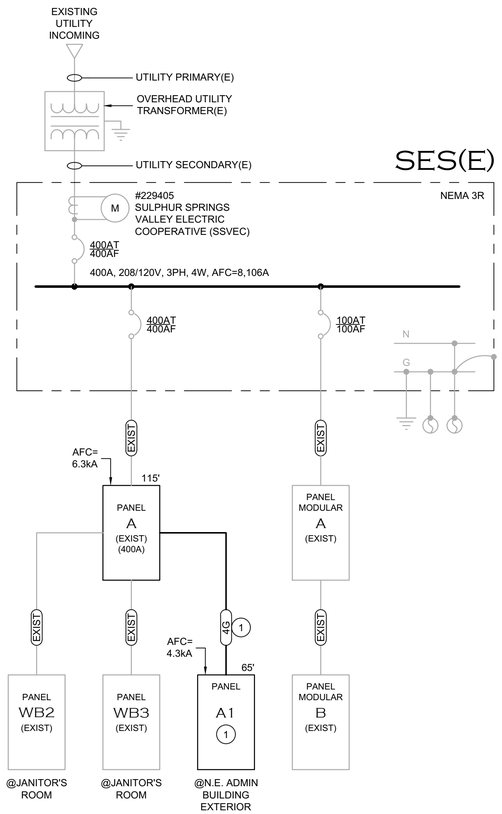

ADMIN BUILDING & WEIGH SCALE ONE LINE DIAGRAM -

3 NO SCALE

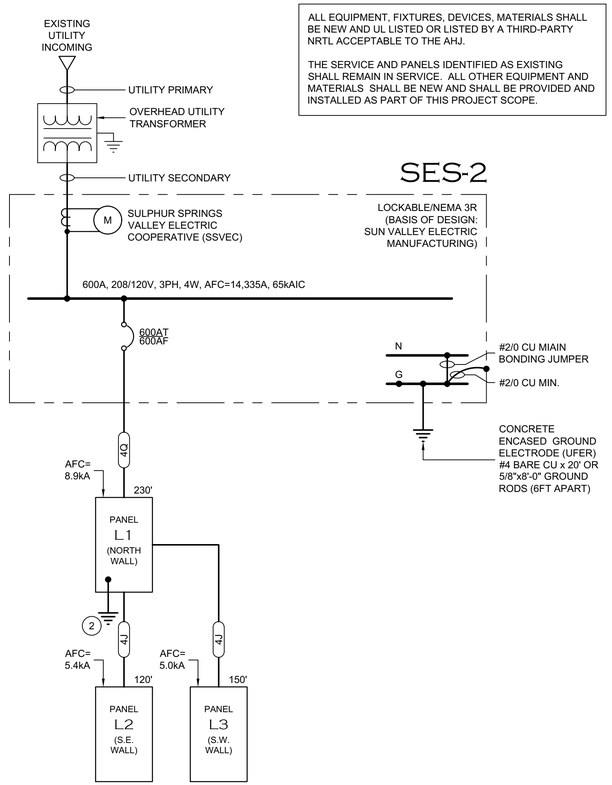

INSPECTION BUILDING ONE LINE DIAGRAM

1 NO SCALE

ALL EQUIPMENT, FIXTURES, DEVICES, MATERIALS SHALL BE NEW AND UL LISTED OR LISTED BY A THIRD-PARTY NRTL ACCEPTABLE TO THE AHJ.

THE SERVICE AND PANELS IDENTIFIED AS EXISTING SHALL REMAIN IN SERVICE. ALL OTHER EQUIPMENT AND MATERIALS SHALL BE NEW AND SHALL BE PROVIDED AND INSTALLED AS PART OF THIS PROJECT SCOPE.

GENERAL NOTES

A. GROUNDING - PROVIDE AND INSTALL GROUND ELECTRODES AND CONNECTIONS AS INDICATED AND ADDITIONAL AS REQUIRED PER NEC AND AHJ. UFER SHALL BE REQUIRED ON ALL NEW CONSTRUCTION. GROUND ALL TRANSFORMERS TO THE GROUND ELECTRODE SYSTEM.

B. UTILITY SERVICE - WHEN A UTILITY CONNECTION IS SHOWN ON THE ONE-LINE DIAGRAM (SEE SYMBOL LEGEND), COORDINATE ALL SERVICE REQUIREMENTS WITH UTILITY. PROVIDE AND INSTALL ALL NECESSARY PRIMARY / SECONDARY CONDUIT, TRANSFORMER PADS, ETC. AS REQUIRED BY THE UTILITY PER UTILITY SPECIFICATIONS. WITHIN (2) WEEKS OF PROJECT AWARD CONTRACTOR SHALL SUBMIT ELECTRICAL PLANS TO THE UTILITY FOR REVIEW.

C. SES - WHEN INDICATED ON ONE-LINE, PROVIDE AND INSTALL SES, RATINGS AS INDICATED. VERIFY ALL DIMENSIONS. MAINTAIN WORKING CLEARANCE PER NEC AND UTILITY REQUIREMENTS. PROVIDE 4" HOUSE KEEPING PAD FOR GROUND MOUNTED SES. CONTRACTOR SHALL SUBMIT SES/METER SHOP DRAWINGS TO UTILITY METER SHOP FOR APPROVAL.

D. CABLE LENGTHS WHEN INDICATED ON ONE-LINE ARE APPROXIMATE AND ARE FOR REFERENCE ONLY FOR CALCULATIONS AND ARE NOT TO BE USED FOR MATERIAL TAKEOFFS.

KEYED NOTES

1. PROVIDE & INSTALL PANELBOARD AND FEEDER.
2. #2/0 CU WATER BOND, #2/0 CU GAS BOND, #4 CU EQUIPMENT BOND, #4 BARE CU X 20' UFER, NO MAIN BONDING JUMPER.

FAULT CURRENT NOTES

1. UTILITY FAULT CURRENT VALUES ARE OBTAINED FROM PUBLISHED UTILITY DATA BASED ON SERVICE SIZE.
2. FAULT CURRENT CALCULATIONS ARE COMPLETED USING ETAP (ELECTRICAL TRANSIENT ANALYZER PROGRAM). STANDARD INPUT PARAMETERS ARE AS FOLLOWS:
   - PRE-FAULT VOLTAGE = 100%
   - CABLE IMPEDANCE PER NEC STANDARD LIBRARY.
   - TRANSFORMER IMPEDANCE AND X/R RATIOS ARE PER TYPICAL MANUFACTURERS DATA UNLESS NOTED OTHERWISE.
   - FAULT CURRENT VALUES SHOWN ARE 3 PHASE, 30 CYCLE, RMS SYMMETRICAL UNLESS NOTED OTHERWISE.
   - FOR SINGLE PHASE SYSTEMS, BUSSMANN CALCULATIONS ARE USED.
3. COMPLETE FAULT CURRENT REPORTS ARE AVAILABLE UPON REQUEST.

LOAD SCHEDULE

	RATINGS		LOADING (KVA)						
Bus ID	VOLTS	AMPS	ADDED LOAD	TOTAL OPER.	25% EXIST.	25% LG MOTOR	CODE KVA	CODE AMPS	NOTES
SES	208	400	97	97	0		97	269	1
PANEL A	208	400	97	97	0		97	269	1
PANEL A1	208	100	20	20	0		20	56	

1. INCLUDES ESTIMATED EXISTING CONNECTED CODE LOAD.

4 LOAD CALCULATIONS - ADMIN BUILDING & WEIGH SCALE
NO SCALE

LOAD SCHEDULE

	RATINGS		LOADING (KVA)						
Bus ID	VOLTS	AMPS	ADDED LOAD	TOTAL OPER.	25% EXIST.	25% LG MOTOR	CODE KVA	CODE AMPS	NOTES
SES-2	208	600	174	174	0		174	483	
PANEL L1	208	600	174	174	0		174	483	
PANEL L2	208	200	40	40	0		40	111	
PANEL L3	208	200	48	48	0		48	133	

2 LOAD CALCULATIONS - INSPECTION BUILDING
NO SCALE

TAG			CONDUIT		CONDUCTOR	
PRI	SEC	MOD	SETS	SIZE	SIZE	GND(CU)
4	A	*	1	3/4"	4#12	#12
4	B	*	1	3/4"	4#10	#10
4	C	*	1	3/4"	4#8	#10
4	D	*	1	1"	4#6	#10
4	E	*	1	1-1/4"	4#4	#8
4	F	*	1	1-1/2"	4#2	#6
4	G	*	1	1-1/2"	4#1	#6
4	H	*	1	2"	4#1/0	#6
4	I	*	1	2"	4#2/0	#6
4	J	*	1	2"	4#3/0	#6
4	K	*	1	2-1/2"	4#4/0	#4
4	L	*	1	3"	4#250	#4
4	M	*	1	3"	4#350	#4
4	N	*	2	2"	4#3/0	#2
4	NA	*	1	4"	4#600	#2
4	O	*	2	2-1/2"	4#4/0	#2
4	P	*	2	3"	4#250	#2
4	Q	*	2	3"	4#350	#1
4	R	*	2	4"	4#500	#1/0
4	S	*	3	3"	4#350	#2/0
4	T	*	3	4"	4#600	#3/0
4	U	*	4	4"	4#600	#4/0
4	V	*	5	4"	4#600	#250
4	W	*	6	4"	4#600	#350
4	X	*	8	4"	4#500	#400

(CU) GROUND MODIFIER			
1	2	3	4
#8			
#8	#6		
#8	#6	#4	
#4	#2		
#4	#2	#1	
#4	#2	#1	#1/0
#4	#2	#1	#1/0
#4	#2	#1	#1/0
#2	#1	#1/0	#2/0
#2	#1	#1/0	#2/0
#2	#1	#1/0	#2/0
#1	#1/0	#2/0	#3/0
#1	#1/0	#2/0	#3/0
#1	#1/0	#2/0	#3/0
#1	#1/0	#2/0	#3/0
#2/0	#3/0	#4/0	#250
#3/0	#4/0	#250	#350
#4/0	#250	#350	#400
#250	#350	#400	#500
#350	#400	#500	#600
#400	#500	#600	#700
#500	#600	#700	#750

SUFFIX INDICATES INCREASED GROUND SIZE. SEE THE CORRESPONDING COLUMN.
EXAMPLE: 4R2 - (2) 4"C., 4#600, 1#3/0G.
ALL GROUNDS ARE COPPER.

FILL BASED ON PVC SCHEDULE 40
INSULATION BASED ON THHN/THWN (#12 THROUGH #6) AND XHHW-2 (#4 AND LARGER)

5 FEEDER SCHEDULE
NO SCALE

APPLIED ENGINEERING
2800 S. RURAL RD. SUITE 101
TEMPE, AZ 85282 (480)968 3070

VOLTA
1730 E. Northern Avenue, Ste. 120, Phoenix, AZ 85020
Tel. (480) 659-0511, VoltaUS.com

Registered Professional Engineer (Electrical) CERTIFICATE NO. 30536 WILLIAM J. BETHURUM, IV ARIZONA U.S.A.
DS 30/26
SEAL EXPIRES: 09/30/26

Issue Date:	10 JULY 2026	
Revisions:	# Description	Date

gabor lorant architects
3326 n. 3rd avenue suite 200
phoenix, arizona 85013
tel: 602.667.9090
fax: 602.667.9133
gaborlorant.com
gla Project No.: PHX21-5038-00

ARIZONA DEPARTMENT OF TRANSPORTATION
PROJECT DELIVERY AND OPERATIONS DIVISION
PROJECT MANAGEMENT GROUP

SAN SIMON PORT OF ENTRY
ELECTRICAL ONE LINE DIAGRAM AND SCHEDULES

ROUTE	MILEPOST	STRUCTURE NO.
I-10	383	

F.H.W.A Arizona Division	STATE	PROJECT NO.	FEDERAL ID NO.	SHEET NO.	TOTAL SHEETS	RECORD DRAWING
	ARIZ.	010 CH 383	010-F(238)T	179	200	

LOCATION: SAN SIMON PORT OF ENTRY (POE)
DWG NO. E600
TRACS NO. F0728 01C
___ OF ___

07.29.26

DO NOT SCALE DRAWINGS. DO NOT PLOT 'SCALE TO FIT'. THIS DOCUMENT IS FORMATTED FOR THE ANSI D (22"x34") SHEET SIZE.
FULL-SIZE PLOT ON ANSI D (22"x34") PAPER ONLY. HALF-SIZE PLOT ON 11"x17" PAPER ONLY.

STAPLE ZONE

Panelboard: A (EXISTING)

Location: EXIST. ADMIN NORTH EXTERIOR
Supply: SES(E)
Mounting: Surface
Enclosure: NEMA 3R

Voltage: 208 V, 3Ø, 4W
Bus Rating: 400 A
Neutral: 100%
Feed-Thru Lugs: No
Features & Modifications: -

Mains Type: MCB
Mains Rating: 400 A
Mains FN/Note: -
SCCR: 10 kA

Ckt	Description	Trip (A)	Poles	FN/Note	Phase A Load (VA)		Phase B Load (VA)		Phase C Load (VA)		FN/Note	Poles	Trip (A)	Description	Ckt
1					4500	3750					--	2	60	DOG HOUSE	2
3	WB2	100	3	--			4500	3750							4
5									4500	3750	--	2	60	SERVICE BOOTH	6
7	EXISTING	100	2	--	6800	3750									8
9							6800	3750			--	2	60	EAST RTU	10
11	EXISTING	100	2	--					6800	3750					12
13					7800	1560					--	2	30	WEST TRU	14
15	VMS	60	1	--			5040	1560							16
17	SPARE	20	1	--					0	180	--	1	20	GFI	18
19	SPARE	20	1	--	0	0					--	1	20	SPARE	20
21	SPARE	20	1	--			0	540			--	1	20	COMPUTER	22
23	SPARE	20	1	--					0	540	--	1	20	COMPUTER	24
25	SPARE	20	1	--	0	540					--	1	20	COMPUTER	26
27	SPARE	20	1	--			0	540			--	1	20	COMPUTER	28
29	SPARE	20	1	--					0	540	--	1	20	COMPUTER	30
31	SPARE	20	1	--	0	500					--	1	20	N. OUTSIDE LIGHTS	32
33	SPARE	20	1	--			0	--			--	1	--	BUSSED SPACE	34
35	BUSSED SPACE	--	1	--					--	--	--	1	--	BUSSED SPACE	36
(1) 37	GRINDER PUMP (1HP)	20	2		915	6745									38 (1)
39							915	4696				3	100	PANEL A1	40
41	BUSSED SPACE	--	1	--					--	5246					42
				Connected Load:	37 kVA		32 kVA		25 kVA						
				Connected Current:	316 A		276 A		211 A						

Load Classification	Connected	Factor	Demand
Lighting - Interior	1286 VA	125.00%	1607 VA
Receptacle - General	8570 VA	100.00%	8570 VA
Lighting - Exterior	233 VA	125.00%	292 VA
CONTINUOUS LOAD (C)	7729 VA	125.00%	9662 VA

Panel Totals	
Connected Load:	94 kVA
Connected Current:	262 A
Demand Load:	97 kVA
Demand Current:	268 A

Notes:

Panelboard: A1 (NEW)

Location: HALL A104 NORTH EXTERIOR
Supply: A
Mounting: Surface
Enclosure: NEMA 3R

Voltage: 208 V, 3Ø, 4W
Bus Rating: 125 A
Neutral: 100%
Feed-Thru Lugs: No
Features & Modifications: -

Mains Type: MCB
Mains Rating: 100 A
Mains FN/Note: -
SCCR: 10 kA

Ckt	Description	Trip (A)	Poles	FN/Note	A		B		C		FN/Note	Poles	Trip (A)	Description	Ckt
1	LTG & EMERG - ADMIN INTERIOR	20	1		1103	750						1	20	COPIER HALL A104	2
3	LTG & EMERG - ADMIN EXTERIOR	20	1				133	750				1	20	COPIER OFFICE A106	4
5	LTG EXTERIOR - WEIGHSCALE PIT	20	1						233	1080		1	20	RECEPTS OFFICE A106	6
7	FLAGPOLE LIGHTING	20	1		49	900						1	20	RECEPTS HALL A104	8
9	SPARE	20	1	--			0	1440				1	20	RECEPTS PERMIT OFFICE A102	10
11	SPARE	20	1	--					0	540		1	20	RECEPTS LOBBY A100	12
13	CONDENSING PUMP (CP-4)	20	1		50	1080						1	20	RECEPTS WEIGHMASTER A101	14
15	SPARE	20	1	--			0	900				1	20	RECEPTS WEIGHSCALE PIT	16
17	SPARE	20	1	--					0						18
19	SPARE	20	1	--	0	500					--	1	20	WEIGH SCALE	20
21	SPARE	20	1	--			0	200			--	1	20	WEIGH SCALE - SIGNAL LIGHTS	22
23	SPARE	20	1	--					0	0	--	1	20	SPARE	24
25	SPARE	20	1	--	0	0					--	1	20	SPARE	26
27	SPARE	20	1	--			0	0			--	1	20	SPARE	28
29	SPARE	20	1	--					0	0	--	1	20	SPARE	30
31	SPARE	20	1	--	0	0					--	1	20	SPARE	32
33	SPARE	20	1	--			0	0			--	1	20	SPARE	34
35	EXTERIOR MAINTENANCE RECEPT	20	1						1080	1040		2	15	(OU-1/IU-1) SPLIT SYSTEM OUTDOOR UNIT (10MCA)	36
37	AIR HANDLER (AH-1) 37MCA	40	3		1273	1040									38
39							1273	0			--	1	20	SPARE	40
41									1273	0	--	1	20	SPARE	42
				Connected Load:	7 kVA		5 kVA		5 kVA						
				Connected Current:	57 A		39 A		44 A						

Load Classification	Connected	Factor	Demand
Lighting - Interior	1286 VA	125.00%	1607 VA
Receptacle - General	8570 VA	100.00%	8570 VA
Lighting - Exterior	233 VA	125.00%	292 VA
CONTINUOUS LOAD (C)	5899 VA	125.00%	7374 VA

Panel Totals	
Connected Load:	17 kVA
Connected Current:	46 A
Demand Load:	19 kVA
Demand Current:	51 A

Notes:

GENERAL NOTES

A. COMPLY WITH NEC ART. 408.4. IDENTIFY EACH BRANCH CIRCUIT AS TO ITS CLEAR, EVIDENT, AND SPECIFIC PURPOSE OR USE. THE IDENTIFICATION SHALL INCLUDE SUFFICIENT DETAIL TO ALLOW EACH CIRCUIT TO BE DISTINGUISHED FROM ALL OTHERS. COMPLETE THE PANEL SCHEDULE(S) BASED ON AS-BUILT CONDITIONS AND LOCATE IN PANELBOARD(S). IDENTIFY ALL SPARES ACCORDINGLY AND SET TO 'OFF' POSITION.

KEYED NOTES

1. PROVIDE AND INSTALL BREAKER INDICATED.

1 PANEL SCHEDULES
NOT TO SCALE

APPLIED ENGINEERING
2800 S. RURAL RD. SUITE 101
TEMPE, AZ 85282 (480)968 3070

VOLTA
1730 E. Northern Avenue, Ste. 120, Phoenix, AZ 85020
Tel. (480) 659-0511, VoltaUS.com

Dec 30/26
Registered Professional Engineer (Specialty)
CERTIFICATE NO.
30536
WILLIAM J.
BETHURUM, IV
ARIZONA U.S.A.
SEAL EXPIRY: 09/30/26

Issue Date:	10 JULY 2026	
Revisions:	# Description	Date

gabor lorant architects
3326 n. 3rd avenue suite 200
phoenix, arizona 85013
tel: 602.667.9090
fax: 602.667.9133
gaborlorant.com

gla Project No.: PHX21-5038-00

ARIZONA DEPARTMENT OF TRANSPORTATION
PROJECT DELIVERY AND OPERATIONS DIVISION
PROJECT MANAGEMENT GROUP

SAN SIMON PORT OF ENTRY
PANEL SCHEDULES ADMIN BUILDING

ROUTE I-10
MILEPOST 383
STRUCTURE NO.

F.H.W.A Arizona Division	STATE	PROJECT NO.	FEDERAL ID NO.	SHEET NO.	TOTAL SHEETS	RECORD DRAWING
	ARIZ.	010 CH 383	010-F(238)T	180	200	
LOCATION: SAN SIMON PORT OF ENTRY (POE)						DWG NO. E700
TRACS NO. F0728 01C						___ OF ___

7/23/2026 9:19:02 PM

DO NOT SCALE DRAWINGS. DO NOT PLOT 'SCALE TO FIT'. THIS DOCUMENT IS FORMATTED FOR THE ANSI D (22"x34") SHEET SIZE.
FULL-SIZE PLOT ON ANSI D (22"x34") PAPER ONLY. HALF-SIZE PLOT ON 11"x17" PAPER ONLY.

STAPLE ZONE

Panelboard: L1

Location: INSPECTION BAY #2 102
Supply: SES-2
Mounting: Surface
Enclosure: NEMA 1

Voltage: 208 V, 3Ø, 4W
Bus Rating: 600 A
Neutral: 100%
Feed-Thru Lugs: No
Features & Modifications: -

Mains Type: MCB
Mains Rating: 600 A
Mains FN/Note: -
SCCR: 10 kA

Ckt	Description	Trip (A)	Poles	FN/Note	A		B		C		FN/Note	Poles	Trip (A)	Description	Ckt
1	LTG & EMERG - NORTH/SOUTH...	20	1		320	720						1	20	RECEPTS - PIT NO. 2	2
3	LIGHTING - EAST/WEST CANOPIES	20	1				320	1110				1	20	DRINKING FOUNTAIN (DF-1) / EWS-1	4
5	LTG & EMERG - INTERIOR	20	1						1121	0	--	1	20	SPARE	6
7	LTG & EMER - WEST INTERIOR	20	1		1076	2400						2	30	INSTANTANEOUS WATER HEATER (IWH-1) (4.8KW)	8
9	LIGHTING - PIT NO. 2	20	1				367	2400							10
11	LIGHTING - PIT NO. 1	20	1						333	901				PIT NO. 2 - NORTH EAST	12
13	SPARE	20	1	--	0	901						3	30	MOTORIZED GRATE	14
15	SPARE	20	1	--			0	901						(2HP EST.)	16
(1) 17	CABINET NO. 1 (6.5FLA)	20	1	--					780	0	--	1	20	SPARE	18
(1) 19	CABINET NO. 5 (4.3FLA)	20	1	--	516	0					--	1	20	SPARE	20
21	SPARE	20	1	--			0	0			--	1	20	SPARE	22
23	SPARE	20	1	--					0	0	--	1	20	SPARE	24
25	RECEPTACLES - NORTHEAST	20	1		540	4323									26
27	RECEPTACLES - NORTHWEST	20	1				1277	4323				3	50	UNIT HEATER (UH-1) (36AMPS)	28
29	SPARE	20	1	--					0	4323					30
31					504	4323									32
33	ROLLUP DOOR - EAST SIDE (1HP)	30	3				504	4323				3	50	UNIT HEATER (UH-2) (36AMPS)	34
35									504	4323					36
37	SPARE	20	1	--	0	4323									38
39	SPARE	20	1	--			0	4323				3	50	UNIT HEATER (UH-3) (36AMPS)	40
41	SPARE	20	1	--					0	4323					42
43					2006	4323									44
45	EXHAUST FAN (EF-3) (5HP)	35	3				2006	4323				3	50	UNIT HEATER (UH-4) (36AMPS)	46
47									2006	4323					48
49					2496	901								PIT NO. 2 - NORTH WEST	50
51	AIR COMPRESSOR (AC-1) (5HP)	35	3				2496	901				3	20	MOTORIZED GRATE	52
53									2496	901				(2HP EST.)	54
(1) 55	CABINET NO. 2 (5.6FLA)	20	1	--	672	0					--	1	20	SPARE	56
(1) 57	CABINET NO. 4 (4.3FLA)	20	1	--			516	0			--	1	20	SPARE	58
59	SPARE	20	1	--					0	0	--	1	20	SPARE	60
61	SPARE	20	1	--	0	--					--	1	--	BUSSED SPACE	62
63	SPARE	20	1	--			0	--			--	1	--	BUSSED SPACE	64
65	SPARE	20	1	--					0	--	--	1	--	BUSSED SPACE	66
67					12640	16676									68
69	PANEL 'L2'	200	3				13660	15180				3	200	PANEL 'L3'	70
71									14020	15360					72
	Connected Load:				60 kVA		59 kVA		56 kVA						
	Connected Current:				501 A		495 A		464 A						

Load Classification	Connected	Factor	Demand
Other	2260 VA	100.00%	2260 VA
Lighting - Interior	3537 VA	125.00%	4422 VA
Receptacle - General	8390 VA	100.00%	8390 VA
Receptacle - Dedicated	917 VA	100.00%	917 VA
NON-CONTINUOUS LOAD (N)	110561 VA	100.00%	110561 VA
MOTOR LOAD (M)	34141 VA	100.00%	34141 VA
CONTINUOUS LOAD (C)	10808 VA	125.00%	13510 VA

Panel Totals	
Connected Load:	174 kVA
Connected Current:	484 A
Demand Load:	178 kVA
Demand Current:	494 A

Notes:

Panelboard: L2

Location: INSPECTION BAY #1 101
Supply: L1
Mounting: Surface
Enclosure: NEMA 1

Voltage: 208 V, 3Ø, 4W
Bus Rating: 225 A
Neutral: 100%
Feed-Thru Lugs: No
Features & Modifications: -

Mains Type: MCB
Mains Rating: 200 A
Mains FN/Note: -
SCCR: 10 kA

Ckt	Description	Trip (A)	Poles	FN/Note	A		B		C		FN/Note	Poles	Trip (A)	Description	Ckt
1	SPARE	20	1	--		720						1	20	RECEPTACLES - SOUTH WALL	2
3	SPARE	20	1	--			0	1380				1	20	PIT NO. 2 GRATE POWER	4
5	SPARE	20	1	--					0	1740		1	20	PIT NO. 1 GRATE POWER	6
7	SPARE	20	1	--	0	0						1	20	MID PONY WALL (FUTURE)	8
9	SPARE	20	1	--			0	0			--	1	20	SPARE	10
11	SPARE	20	1	--					0	0	--	1	20	SPARE	12
13					1126	0					--	1	20	SPARE	14
15	EXHAUST FAN (EF-2) (2HP)	20	3				1126	0			--	1	20	SPARE	16
17									1126	0	--	1	20	SPARE	18
19	SPARE	20	1	--	0	901								PIT NO. 1 - SOUTHEAST	20
21	EC-2 - PUMP CONTROLLER	20	1				360	901				3	30	MOTORIZED GRATE	22
23	Other	20	1						360	901				(2HP EST.)	24
25					1033	504									26
27	EVAPORATIVE COOLER (EC-2) (8.6FLA)	15	3				1033	504				3	30	ROLLUP DOOR - NORTHEAST (1HP)	28
29									1033	504					30
31					1033	504									32
33	EVAPORATIVE COOLER (EC-3) (8.6FLA)	15	3				1033	504				3	30	ROLLUP DOOR - SOUTHEAST (1HP)	34
35									1033	504					36
37					2496	4323									38
39	UNIT HEATER (UH-6) (36AMPS)	50	3				2496	4323				3	50	UNIT HEATER (UH-5) (36AMPS)	40
41									2496	4323					42
43	SPARE	20	1	--	0	0					--	1	20	SPARE	44
45	SPARE	20	1	--			0	0			--	1	20	SPARE	46
47	SPARE	20	1	--					0	0	--	1	20	SPARE	48
49	SPARE	20	1	--	0	0					--	1	20	SPARE	50
51	BUSSED SPACE	--	1	--			--	--			--	1	--	BUSSED SPACE	52
53	BUSSED SPACE	--	1	--					--	--	--	1	--	BUSSED SPACE	54
	Connected Load:				13 kVA		14 kVA		14 kVA						
	Connected Current:				105 A		115 A		118 A						

Load Classification	Connected	Factor	Demand
Other	1080 VA	100.00%	1080 VA
Receptacle - General	3300 VA	100.00%	3300 VA
Receptacle - Dedicated	180 VA	100.00%	180 VA
NON-CONTINUOUS LOAD (N)	20457 VA	100.00%	20457 VA
MOTOR LOAD (M)	12602 VA	100.00%	12602 VA
CONTINUOUS LOAD (C)	2702 VA	125.00%	3378 VA

Panel Totals	
Connected Load:	40 kVA
Connected Current:	112 A
Demand Load:	41 kVA
Demand Current:	114 A

Notes:

Panelboard: L3

Location: INSPECTION BAY #1 101
Supply: L1
Mounting: Surface
Enclosure: NEMA 1

Voltage: 208 V, 3Ø, 4W
Bus Rating: 225 A
Neutral: 100%
Feed-Thru Lugs: No
Features & Modifications: -

Mains Type: MCB
Mains Rating: 200 A
Mains FN/Note: -
SCCR: 10 kA

Ckt	Description	Trip (A)	Poles	FN/Note	A		B		C		FN/Note	Poles	Trip (A)	Description	Ckt
1	SPARE	20	1	--	0	0									2
3	SPARE	20	1	--			0	0							4
5	SPARE	20	1	--					0	0	--	1	20	SPARE	6
7	SPARE	20	1	--	0	901								PIT NO. 2 - SOUTHWEST	8
9	SPARE	20	1	--			0	901				3	20	MOTORIZED GRATE	10
11	SPARE	20	1	--					0	901				(2HP EST.)	12
13	SPARE	20	1	--	0	1126									14
(1) 15	GATE MOTOR (5.8FLA)	30	2	--			604	1126				3	20	EXHAUST FAN (EF-1) (2HP)	16
17									604	1126					18
19	RECEPTACLES - SOUTHWEST...	20	1		540	504									20
21	SUMP PUMP (SP-2)	20	1				360	504				3	20	ROLLUP DOOR - SOUTHWEST (1HP)	22
23	ROOF MAINTENANCE RECEPTS	20	1						540	504					24
25	PIT RECEPTACLES	20	1		720	1033									26
27	SPARE	20	1	--			0	1033				3	20	EVAPORATIVE COOLER (EC-1)	28
29	SPARE	20	1	--					0	1033					30
31					2006	360									32
33	EXHAUST FAN (EF-4) (5HP)	35	3				2006	0			--	1	20	EC-1 - PUMP CONTROLLER	34
35									2006	0	--	1	20	SPARE	36
37					4323	4323									38
39	UNIT HEATER (UH-8) (36AMPS)	50	3				4323	4323				3	50	UNIT HEATER (UH-7) (36AMPS)	40
41									4323	4323					42
43	SPARE	20	1	--	0	840						1	20	GAS DETECTION (GD-1,2,3,4,5)	44
45	SPARE	20	1	--			0	0			--	1	20	SPARE	46
47	SPARE	20	1	--					0	0	--	1	20	SPARE	48
49	SPARE	20	1	--	0	0					--	1	20	SPARE	50
51	BUSSED SPACE	--	1	--			--	--			--	1	--	BUSSED SPACE	52
53	BUSSED SPACE	--	1	--					--	--	--	1	--	BUSSED SPACE	54
	Connected Load:				17 kVA		15 kVA		15 kVA						
	Connected Current:				139 A		127 A		128 A						

Load Classification	Connected	Factor	Demand
Other	820 VA	100.00%	820 VA
Receptacle - General	2540 VA	100.00%	2540 VA
NON-CONTINUOUS LOAD (N)	25938 VA	100.00%	25938 VA
MOTOR LOAD (M)	14008 VA	100.00%	14008 VA
CONTINUOUS LOAD (C)	2702 VA	125.00%	3378 VA

Panel Totals	
Connected Load:	47 kVA
Connected Current:	131 A
Demand Load:	48 kVA
Demand Current:	133 A

Notes:

1 PANEL SCHEDULES
NOT TO SCALE

GENERAL NOTES

A. COMPLY WITH NEC ART. 408.4. IDENTIFY EACH BRANCH CIRCUIT AS TO ITS CLEAR, EVIDENT, AND SPECIFIC PURPOSE OR USE. THE IDENTIFICATION SHALL INCLUDE SUFFICIENT DETAIL TO ALLOW EACH CIRCUIT TO BE DISTINGUISHED FROM ALL OTHERS. COMPLETE THE PANEL SCHEDULE(S) BASED ON AS-BUILT CONDITIONS AND LOCATE IN PANELBOARD(S). IDENTIFY ALL SPARES ACCORDINGLY AND SET TO 'OFF' POSITION.

KEYED NOTES

1 REFER TO CIVIL DRAWINGS FOR EQUIPMENT LOCATIONS.

APPLIED ENGINEERING
2800 S. RURAL RD. SUITE 101
TEMPE, AZ 85282 (480)968 3070

VOLTA
1730 E. Northern Avenue, Ste. 120, Phoenix, AZ 85020
Tel. (480) 659-0511, VoltaUS.com

09/30/26 Professional Engineer Registered CERTIFICATE NO. 30536 WILLIAM J. BETHURUM, IV ARIZONA U.S.A.
SEAL EXPIRY: 09/30/26

Issue Date:	10 JULY 2026	
Revisions:	# Description	Date

gabor lorant architects
3326 n. 3rd avenue suite 200
phoenix, arizona 85013
tel: 602.667.9090
fax: 602.667.9133
gaborlorant.com

gla Project No.: PHX21-5038-00

ARIZONA DEPARTMENT OF TRANSPORTATION
PROJECT DELIVERY AND OPERATIONS DIVISION
PROJECT MANAGEMENT GROUP
SAN SIMON PORT OF ENTRY
PANEL SCHEDULES INSPECTION BUILDING

ROUTE I-10
MILEPOST 383
STRUCTURE NO.

F.H.W.A Arizona Division	STATE	PROJECT NO.	FEDERAL ID NO.	SHEET NO.	TOTAL SHEETS	RECORD DRAWING
	ARIZ.	010 CH 383	010-F(238)T	181	200	
LOCATION: SAN SIMON PORT OF ENTRY (POE)					DWG NO. **E701**	
TRACS NO. F0728 01C					___ OF ___	

7/29/2026 9:01:36 AM

DO NOT SCALE DRAWINGS. DO NOT PLOT 'SCALE TO FIT'. THIS DOCUMENT IS FORMATTED FOR THE ANSI D (22"x34") SHEET SIZE.
FULL-SIZE PLOT ON ANSI D (22"x34") PAPER ONLY. HALF-SIZE PLOT ON 11"x17" PAPER ONLY.

STAPLE ZONE

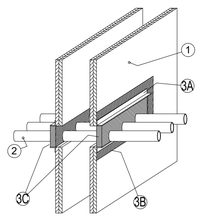

1. Wall Assembly - Constructed in the manner specified in the U300 or U400 series designs as shown in the UL Fire Resistance Directory. The annular space range is 0 to 2 inches.
2. Metallic Pipes - Maximum 5 pipes, 2 inch nominal diameter Type L or heavier copper tubing or 1 inch nominal diameter Sch. 5 or heavier steel pipe, RMC, or EMT.

3A. Steel Frame - Constructed of 7/8" X 7/8", nominal 16 gauge, steel angle secured to the studs with self tapping screws and fender washers.

3B. Forming Material - Diamond shaped steel mesh, or metal fabric, is secured under the steel frame to provide backer support for the FSP Putty.

3C. Nelson FSP Putty - Install FSP to fill all remaining voids within the confines of the steel frame to a minimum 1 inch depth on both sides of the wall.

F Rating - 2 Hr.
T Rating - 0 Hr.
UL System W-L-1031
MEA # 196-84-M Vol. 3

The system described in this detail has tested successfully to ASTM E-814 and ANSI/UL 1479 and has achieved F and T ratings as shown in the illustration box.

All technical information and recommendations contained herein are based on tests we believe to be reliable, however, since the conditions of use and application are beyond our control, Nelson Firestop Products shall not be liable for any damage, direct or consequential, resulting from the use of this material or design. User assumes all risks and liabilities when determining suitability for an application.		F Rating 2 Hours T Rating 0 Hour	Metallic Pipes Gypsum Wall Assembly	
Date 04/03/99	Revision No. 1		Nelson Firestop Products P.O. Box 726, Tulsa, OK 74101 (800)-331-7325 / (918)-627-5530	FS-0098

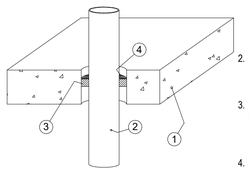

1. Floor or Wall Assembly - Minimum 4-1/2 inch thick lightweight or normal weight concrete floor or wall, or CMU block wall.The maximum annular space is 1/4 inch.
2. Metallic Pipe or Conduit - Maximum nominal 4 inch diameter, Sch. 5 or heavier, steel pipe, RMC, or EMT.
3. Nelson FSP Putty - Minimum 1 inch thick layer of FSP recessed 1 inch from the top surface of the floor or centered within the wall.
4. Steel Tie Wire - Nominal 12 gauge steel tie wire tightly wrapped around the pipe and placed over the top surface of the FSP putty in floor applications or both surfaces in wall applications.

F Rating - 2 Hr.
T Rating - 0 Hr.
UL System C-AJ-1054
MEA # 196-84-M Vol. 3

The system described in this detail has tested successfully to ASTM E-814 and ANSI/UL 1479 and has achieved F and T ratings as shown in the illustration box.

All technical information and recommendations contained herein are based on tests we believe to be reliable, however, since the conditions of use and application are beyond our control, Nelson Firestop Products shall not be liable for any damage, direct or consequential, resulting from the use of this material or design. User assumes all risks and liabilities when determining suitability for an application.		F Rating 2 Hour T Rating 0 Hour	Steel Pipe or Conduit Concrete Floor or Wall Assembly	
Date 04/03/99	Revision No. 1		Nelson Firestop Products P.O. Box 726, Tulsa, OK 74101 (800)-331-7325 / (918)-627-5530	FS-0092

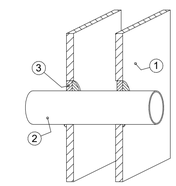

1. Wall Assembly - Constructed in the manner specified in the U300 or U400 series designs as shown in the UL Fire Resistance Directory. The annular space range is 0 inch (point contact) to 2 inches.
2. Metallic Pipe or Conduit - Maximum nominal 20 inch diameter, or smaller, Sch.10 or heavier steel or cast iron pipe,or maximum 2 inch nominal diameter EMT or, Type L or heavier copper tubing or pipe.
3. Nelson LBS+ Sealant - Apply to fill the annular space around the pipe to a minimum 1/2 inch depth, with an additional 1/4 inch bead around the pipe, at areas of point contact, on both sides of the wall.

F Rating - 1 Hr.
T Rating - 0 Hr.
UL System W-L-1185
MEA # 135-00-M

The system described in this detail has tested successfully to ASTM E-814 and ANSI/UL 1479 and has achieved F and T ratings as shown in the illustration box.

All technical information and recommendations contained herein are based on tests we believe to be reliable, however, since the conditions of use and application are beyond our control, Nelson Firestop Products shall not be liable for any damage, direct or consequential, resulting from the use of this material or design. User assumes all risks and liabilities when determining suitability for an application.		F Rating 1 Hours T Rating 0 Hour	Steel Pipe or Conduit Gypsum Wall Assembly	
Date 12/27/99	Revision No. 0		Nelson Firestop Products P.O. Box 726, Tulsa, OK 74101 (800)-331-7325 / (918)-627-5530	FS-0230

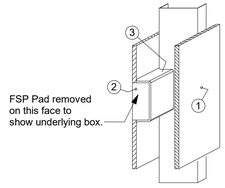

1. Wall Assembly - Constructed in the manner specified in the U300 or U400 series designs as shown in the UL Fire Resistance Directory. The annular space range is 0 inch (point contact) to 2 inches.
2. Metallic Pipe or Conduit - Maximum nominal 20 inch diameter, or smaller, Sch.10 or heavier steel or cast iron pipe,or maximum 2 inch nominal diameter EMT or, Type L or heavier copper tubing or pipe.
3. Nelson LBS+ Sealant - Apply to fill the annular space around the pipe to a minimum 1/2 inch depth, with an additional 1/4 inch bead around the pipe, at areas of point contact, on both sides of the wall.

F Rating - 1 Hr.
UL System Report 98NK34847
MEA # 196-84-M Vol. 2

The system described in this detail has tested successfully to ASTM E-814 and ANSI/UL 1479 and has achieved F and T ratings as shown in the illustration box.

All technical information and recommendations contained herein are based on tests we believe to be reliable, however, since the conditions of use and application are beyond our control, Nelson Firestop Products shall not be liable for any damage, direct or consequential, resulting from the use of this material or design. User assumes all risks and liabilities when determining suitability for an application.		F Rating 1 Hour T Rating	Electrical Outlet Box Gypsum Wall Assembly	
Date 04/03/99	Revision No. 1		Nelson Firestop Products P.O. Box 726, Tulsa, OK 74101 (800)-331-7325 / (918)-627-5530	FS-0216

P1 FIRE PENETRATION DETAILS
NO SCALE

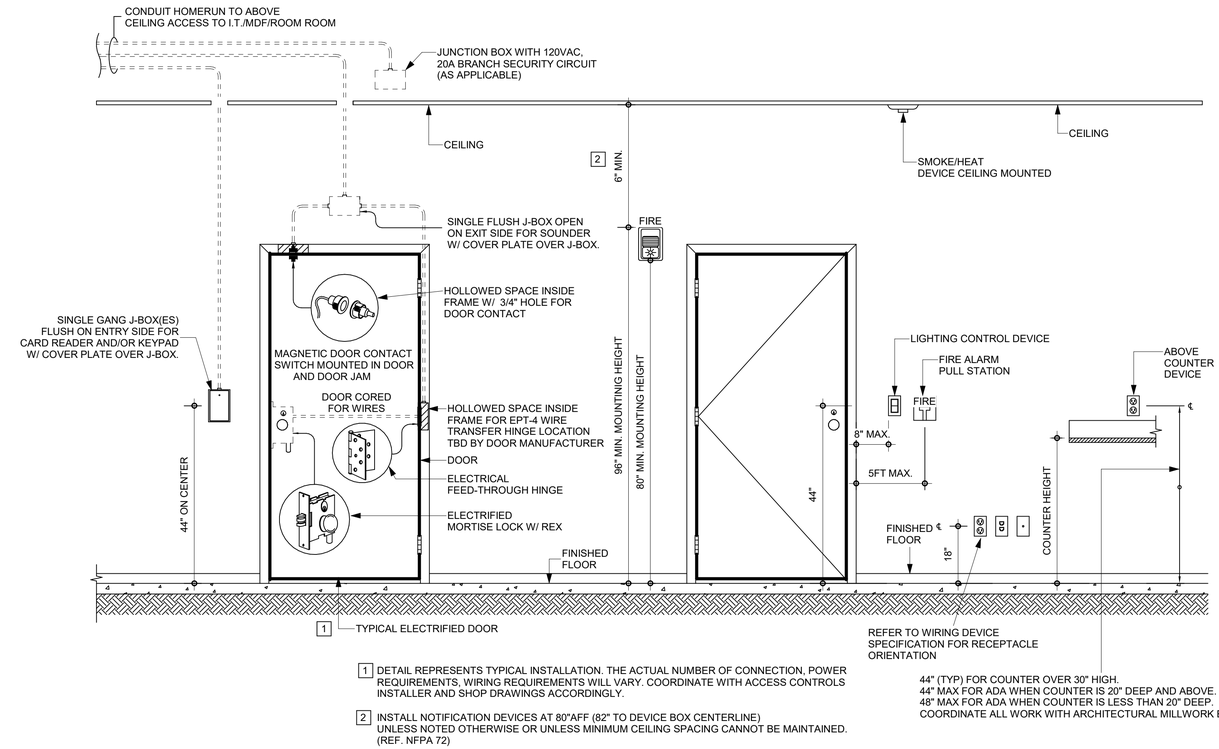

A2 ELECTRIFIED DOOR
NOT TO SCALE

1 DETAIL REPRESENTS TYPICAL INSTALLATION. THE ACTUAL NUMBER OF CONNECTION, POWER REQUIREMENTS, WIRING REQUIREMENTS WILL VARY. COORDINATE WITH ACCESS CONTROLS INSTALLER AND SHOP DRAWINGS ACCORDINGLY.

2 INSTALL NOTIFICATION DEVICES AT 80"AFF (82" TO DEVICE BOX CENTERLINE) UNLESS NOTED OTHERWISE OR UNLESS MINIMUM CEILING SPACING CANNOT BE MAINTAINED. (REF. NFPA 72)

44" (TYP) FOR COUNTER OVER 30" HIGH.
44" MAX FOR ADA WHEN COUNTER IS 20" DEEP AND ABOVE.
48" MAX FOR ADA WHEN COUNTER IS LESS THAN 20" DEEP.
COORDINATE ALL WORK WITH ARCHITECTURAL MILLWORK ELEVATIONS.

A1 DEVICE MOUNTING HEIGHTS
NOT TO SCALE

APPLIED ENGINEERING
2800 S. RURAL RD. SUITE 101
TEMPE, AZ 85282 (480)968 3070

VOLTA
1730 E. Northern Avenue, Ste. 120, Phoenix, AZ 85020
Tel. (480) 659-0511, VoltaUS.com

Registered Professional Engineer - Electrical
CERTIFICATE NO.
30536
WILLIAM J.
BETHURUM, IV
ARIZONA
SEAL EXPIRY: 09/30/26

Issue Date:	10 JULY 2026	
Revisions:	# Description	Date

gabor lorant architects
3326 n. 3rd avenue suite 200
phoenix, arizona 85013
tel: 602.667.9090
fax: 602.667.9133
gaborlorant.com

gla Project No.: PHX21-5038-00

ARIZONA DEPARTMENT OF TRANSPORTATION
PROJECT DELIVERY AND OPERATIONS DIVISION
PROJECT MANAGEMENT GROUP

SAN SIMON PORT OF ENTRY
ELECTRICAL DETAILS

ROUTE I-10
MILEPOST 383
STRUCTURE NO.

F.H.W.A Arizona Division	STATE	PROJECT NO.	FEDERAL ID NO.	SHEET NO.	TOTAL SHEETS	RECORD DRAWING
	ARIZ.	010 CH 383	010-F(238)T	182	200	

LOCATION SAN SIMON PORT OF ENTRY (POE)

TRACS NO. F0728 01C

DWG NO. **E800**

___ OF ___

7/23/2026 9:19:03 PM

DO NOT SCALE DRAWINGS. DO NOT PLOT 'SCALE TO FIT'. THIS DOCUMENT IS FORMATTED FOR THE ANSI D (22"x34") SHEET SIZE.
FULL-SIZE PLOT ON ANSI D (22"x34") PAPER ONLY. HALF-SIZE PLOT ON 11"x17" PAPER ONLY.

STAPLE ZONE

1	PANELBOARD, CONTROL PANEL, OR OTHER ELECTRICAL ENCLOSURE.
2	INTERMEDIATE SUPPORTS AS NEEDED BASED ON EQUIPMENT DIMENSIONS & CONDUIT SUPPORTING REQUIREMENTS.
3	MOUNTING HEIGHT TO HIGHEST SWITCH OR CIRCUIT BREAKER NOT TO EXCEED 2.0M (6FT 7IN) PER NEC. ART. 240.24.

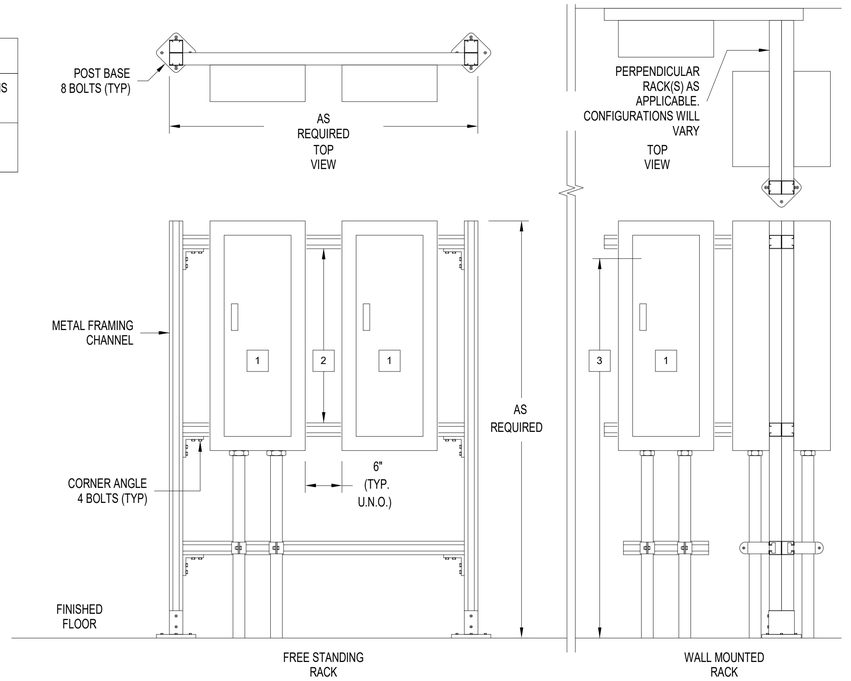

S1 ELECTRICAL EQUIPMENT SUPPORTS - WALL OR RACK MOUNTED
NOT TO SCALE

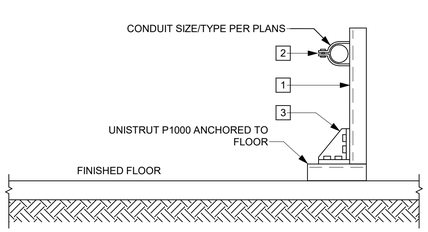

BILL OF MATERIAL		
ITEM	QTY.	DESCRIPTION
1	AS REQ'D.	P1000 UNISTRUT @ 48" OC
2	AS REQ'D.	CONDUIT CLAMP
3	AS REQ'D.	UNISTRUT SUPPORT HARDWARE

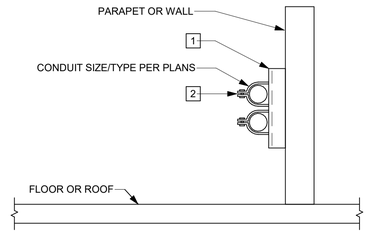

BILL OF MATERIAL		
ITEM	QTY.	DESCRIPTION
1	AS REQ'D.	P1000 UNISTRUT @ 48" OC, ANCHOR STRUT TO STRUCTURE ACCORDINGLY
2	AS REQ'D.	CONDUIT CLAMP

S2 CONDUIT SUPPORT- FLOOR OR WALL
NOT TO SCALE

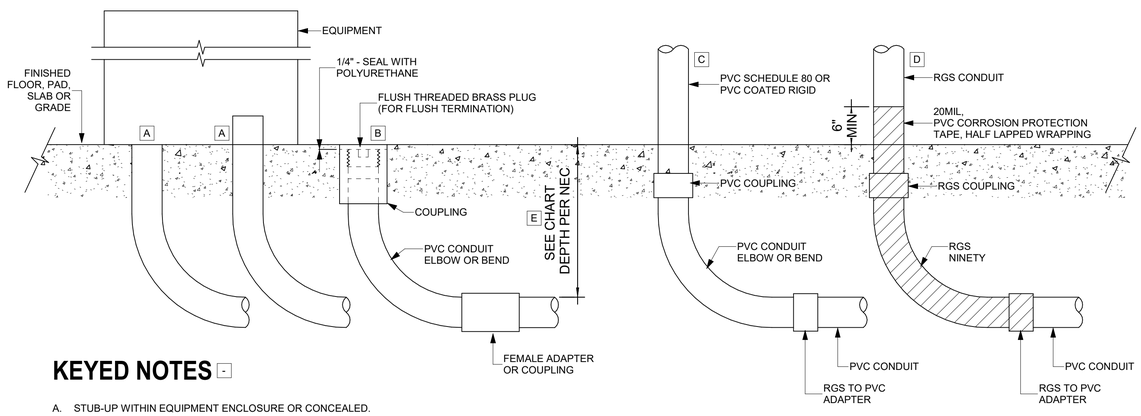

KEYED NOTES

A. STUB-UP WITHIN EQUIPMENT ENCLOSURE OR CONCEALED.

B. FLUSH CONDUIT STUB-UP, EXPOSED.

C. CONDUIT RISER, EXPOSED IN CORROSIVE LOCATIONS.

D. CONDUIT RISER, EXPOSED, AND OR ALL EXTERIOR LOCATIONS.

E. REFER TO UNDERGROUND DUCTBANK DETAIL AND SPECIFICATIONS.

U3 CONDUIT STUB-UP DETAIL_2
NO SCALE

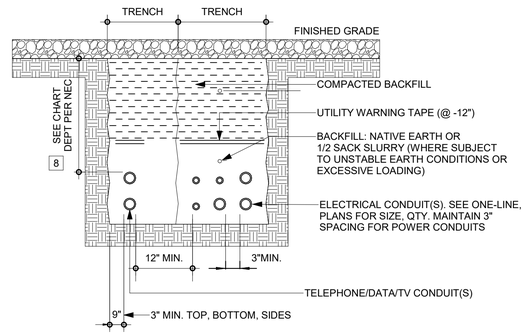

8 MINIMUM DEPTH (TABLE 300.5)	
LOCATIONS	DEPTH
ALL LOCATIONS NOT SPECIFIED.	18"
UNDER 4" THICK (MIN) CONCRETE WITH NO VEHICULAR TRAFFIC.	4"
UNDER STREETS, HIGHWAYS, ROADS, ALLEYS, DRIVEWAYS AND PARKING LOTS.	24"

U1 UNDERGROUND DUCTBANK
NOT TO SCALE

APPLIED ENGINEERING
2800 S. RURAL RD. SUITE 101
TEMPE, AZ 85282 (480)968 3070

VOLTA
1730 E. Northern Avenue, Ste. 120, Phoenix, AZ 85020
Tel. (480) 659-0511, VoltaUS.com

Dec/30/20
Registered Professional Engineer (Specialty)
CERTIFICATE NO.
30536
WILLIAM J.
BETHURUM, IV
ARIZONA U.S.A.
SEAL EXPIRY: 09/30/26

Issue Date:	10 JULY 2026	
Revisions:	# Description	Date

gabor lorant architects
3326 n. 3rd avenue suite 200
phoenix, arizona 85013
tel: 602.667.9090
fax: 602.667.9133
gaborlorant.com
gla Project No.: PHX21-5038-00

ARIZONA DEPARTMENT OF TRANSPORTATION
PROJECT DELIVERY AND OPERATIONS DIVISION
PROJECT MANAGEMENT GROUP

SAN SIMON PORT OF ENTRY
ELECTRICAL DETAILS

ROUTE	MILEPOST	STRUCTURE NO.
I-10	383	

F.H.W.A Arizona Division	STATE	PROJECT NO.	FEDERAL ID NO.	SHEET NO.	TOTAL SHEETS	RECORD DRAWING
	ARIZ.	010 CH 383	010-F(238)T	183	200	

LOCATION: SAN SIMON PORT OF ENTRY (POE)

TRACS NO. F0728 01C

DWG NO. **E801**

___ OF ___

7/23/2026 9:19:04 PM

DO NOT SCALE DRAWINGS. DO NOT PLOT "SCALE TO FIT". THIS DOCUMENT IS FORMATTED FOR THE ANSI D (22"x34") SHEET SIZE.
FULL-SIZE PLOT ON ANSI D (22"x34") PAPER ONLY. HALF-SIZE PLOT ON 11"x17" PAPER ONLY.

STAPLE ZONE

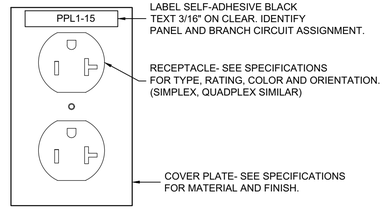

P2 DUPLEX RECEPTACLE
NO SCALE

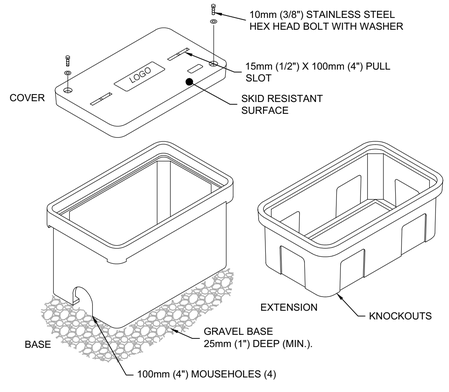

U4 HANDHOLE DETAIL
NO SCALE

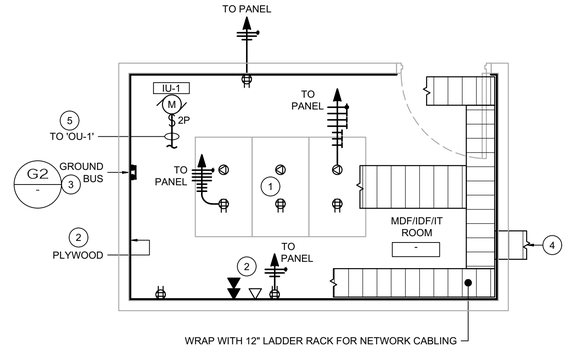

KEYED NOTES

1. MOUNT RECEPTACLES BELOW TRAY, FACING DOWNWARD (TYPICAL).
2. MOUNT & PAINT WITH FIRE RETARDANT PAINT, EIGHT-FOOT (8FT) AT 24" AFF TO 10FT, 3/4" THICK FIRE RETARDANT A/C GRADE OR BETTER, VOID-FREE PLYWOOD PER TIA/EIA-569-A STANDARDS, GRADE A SIDE EXPOSED. TELEPHONE MOUNTING BOARD WITH (1) DEDICATED FOURPLEX OUTLET AND #6 COPPER BOND TO BUILDING GROUND ELECTRODE SYSTEM. TELEPHONE CONDUIT PER UTILITY SPECIFICATIONS
3. COPPER GROUND BUS (TGB) 1/4"x20" @ 16"AFF. CONNECT #6(CU)/GREEN BONDING CONDUCTOR AND EXTEND TO ALL RACKS, CABINETS, LADDER RACK, METAL DUCTS, METAL PIPING, METAL DOOR FRAMES WITHIN THE MDF ROOM ACCORDINGLY.
4. DATA CABLING FROM SURROUNDING AREA TERMINNATING INTO THE SERVER ROOM. NOTE FIRE STOPPING REQUIREMENTS OF THE TRAY/CABLING ENTERING ROOM.
5. CABLE SPECIFICATIONS PER MANUFACTURER'S RECOMMENDATIONS.

1 IT-MDF-IDF ROOMS
SCALE: 1/4"=1'-0"

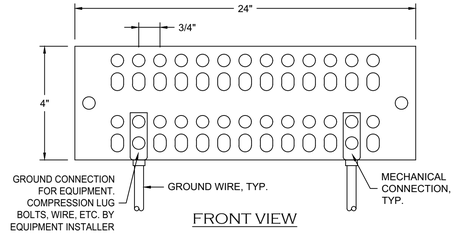

FRONT VIEW

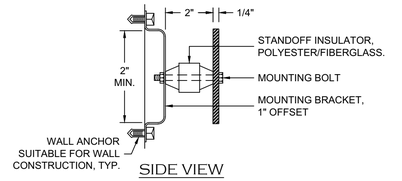

SIDE VIEW

MANUFACTURER: ERICO OR APPROVED EQUAL
EGB-A-14-4-24-QQ

G2 GROUNDING BUSBAR DETAIL
NO SCALE

APPLIED ENGINEERING
2800 S. RURAL RD. SUITE 101
TEMPE, AZ 85282 (480)968 3070

VOLTA
1730 E. Northern Avenue, Ste. 120, Phoenix, AZ 85020
Tel. (480) 659-0511, VoltaUS.com

06/30/26
Registered Professional Engineer (Electrical)
CERTIFICATE NO.
30536
WILLIAM J. BETHURUM, IV
State of Arizona
ARIZONA, U.S.A.
SEAL EXPIRES: 09/30/26

Issue Date:	10 JULY 2026	
Revisions:	Δ Description	Date

gabor lorant architects
3326 n. 3rd avenue suite 200
phoenix, arizona 85013
tel: 602.667.9090
fax: 602.667.9133
gaborlorant.com
gla Project No.: PHX21-5038-00

ARIZONA DEPARTMENT OF TRANSPORTATION
PROJECT DELIVERY AND OPERATIONS DIVISION
PROJECT MANAGEMENT GROUP

SAN SIMON PORT OF ENTRY
ELECTRICAL DETAILS

ROUTE	I-10
MILEPOST	383
STRUCTURE NO.	

F.H.W.A Arizona Division	STATE	PROJECT NO.	FEDERAL ID NO.	SHEET NO.	TOTAL SHEETS	RECORD DRAWING
	ARIZ.	010 CH 383	010-F(238)T	184	200	
LOCATION	SAN SIMON PORT OF ENTRY (POE)					DWG NO. **E802**
TRACS NO. F0728 01C						___ OF ___

07.23.26

CONTROL MEASURE INDEX SHEET (CMIS)

TO BE COMPLETED FOR PROJECTS WITH ONE (1) ACRE OR MORE OF SOIL/GROUND DISTURBANCE OUTSIDE OF JURISDICTIONAL WATERS OF THE U.S. (≥1 ACRE*)

* For projects that meet the definition of maintenance under AZPDES CGP, the permit threshold is five (≥ 5) acres. Consult with ADOT EP Water Resources Management to define Jurisdictional Waters of the U. S.

I. PROJECT DESCRIPTION

A. Owner Name and Address:

Arizona Department of Transportation
205 South 17th Avenue
Phoenix, Arizona 85007-3213

B. Project TRACS Number: F0728 01C

C. Project Name/Location (be consistent with the plan set cover sheet): SAN SIMON PORT OF ENTRY

City: SAN SIMON County: COCHISE

Beginning Latitude (NAD 83): 32° 15' 27.02" N

Beginning Longitude (NAD 83): 109° 10' 57.98" W

Ending Latitude (NAD 83): 32° 15' 25.52" N

Ending Longitude (NAD 83): 109° 10' 35.43" W

To obtain the project latitude/longitude data, refer to the Flash Earth web link below (Bing Maps with labels):

http://www.flashearth.com/

D. Project Description: SAN SIMON PORT OF ENTRY SITE IMPROVEMENTS

II. HYDROLOGIC INFORMATION

A. Percentage of the site that is impervious before and after construction:

Percentage before Construction: _____

Percentage after Construction: _____

B. Receiving Water(s), refer to the plan set cover sheet and the NHD Plus HR Availability Map Web Link below:

https://usgs.maps.arcgis.com/apps/MapTools/index.html?appid=41a5c2ca49bd4a83b239450e61022d53

(If unnamed, state as unnamed)

SAN SIMON RIVER

III. SOIL STABILIZATION MEASURES

☐ All disturbed soil, which will not be paved, riprapped or otherwise covered to prevent erosion, will be revegetated and/or landscaped in accordance with the project plans and specifications.

IV. MEASURES TO CONTROL STORMWATER AND AIR QUALITY

A. Temporary Stormwater and Air Quality Control Measures (CMs) / Best Management Practices (BMPs)

☐ Temporary Diversion Dikes
☐ Temporary Rock Check Dams
☒ Stabilized Construction Entrance/Exit Gravel Pad
☐ Soil Stabilizer for Wind Erosion and Dust Control
☐ Rock Inlet/Outlet Protection
☐ Sediment Control Berms
☐ Silt Fences
☒ Wattles (Excelsior/Straw/Compost)
☐ Excelsior Logs / Sediment Logs
☐ Erosion Control Mattings
☐ Seeding (Class II with final mulch cover)
☐ Gravelbag
☐ Catch Basin Temporary Fabric Filter
☐ Designated Washout Areas
☐ Protected Chemical and Material Storage Area
☐ Equipment Maintenance Procedures
☐ Others Describe: _____

B. Permanent and Post-construction Stormwater and Air Quality Control Measures (CMs) / Best ManagementPractices (BMPs):

☐ Crown Ditch/Dike
☐ Rock Protection
☐ Rock Riprap Channel Lining
☐ Sediment Basin
☐ Embankment Curb
☐ Spillways
☐ Downdrains
☐ Minibenching
☐ Solid Waste Management
☐ **Rock-filled Stormwater Infiltration CM/BMP as Infiltration Basin and/or Trench
☐ **Filtration Structures
☐ **Infiltration Basin and/or Trench
☐ **Retention and/or Detention Basins
☐ **Bioretention
☐ **Manufactured Treatment Devices
☒ Seeding established as a perennial vegetative cover with a density of 70% of the native background vegetative cover.
☐ Others Describe: _____

** Track and report to ADOT EP Water Resources Management:

ADOTWater@azdot.gov

REGISTERED LANDSCAPE ARCHITECT — CERTIFICATE NO. 50615 — ANNE S. DeBOARD — ARIZONA, U.S.A.

	NAME	DATE
DESIGN	ME	08/26
DRAWN	ME	08/26
CHECKED	ASD	08/26

Kimley»Horn

© 2026 KIMLEY-HORN AND ASSOCIATES, INC.

ARIZONA DEPARTMENT OF TRANSPORTATION
PROJECT DELIVERY AND OPERATIONS DIVISION
PROJECT MANAGEMENT GROUP

CONTROL MEASURE INDEX SHEET

ROUTE	F.H.W.A. Arizona Division	STATE	PROJECT NO.	FEDERAL ID NO.	SHEET NO.	TOTAL SHEETS	RECORD DRAWING
I-10		ARIZ.	010 CH 383	010-F(238)T	185	200	
MILEPOST	LOCATION: SAN SIMON PORT OF ENTRY (POE)						DWG NO. R-01.01
STRUCTURE NO.	TRACS NO. F0728 01C						___ OF ___

8:22:36 AM 8/14/2026 TJ.Bulhoes K:\PHX_Roadway\Worksets\ADOT_PROJECTS_2022R3_10.12_291728040-F0728-SAN SIMON POE\dgn\Roadside\Erosion Control\f0728_ecsum01.dgn

GENERAL NOTES:

1. All control installation shall be installed per the plans and specifications. Any deviations shall require Engineer approval.
2. The contractor shall verify limits of soil disturbance throughout the project and bring discrepancies immediately to the attention of the Engineer.
3. All work shall be confined within the disturbance limits as shown on the typical sections.
4. The contractor shall be responsible for installing any required erosion/sediment control measures for any impacts within the project areas, such as any stockpiling or staging areas. See Roadway plans for staging area locations.
5. Construction Entrance/Exit item and quantity are included for bidding purposes only. Entrance/Exit locations shall be determined by the contractor and approved by the Engineer.

PROJECT INFORMATION:

SAN SIMON PORT OF ENTRY SITE IMPROVEMENTS

APPROX. EROSION/SEDIMENT CONTROL TOTAL QUANTITIES

Qty.	*Unit*	*As-Built*	*Item*
1	*AC*		8050003 SEEDING (CLASS II)
200	*SY*		8101018 EROSION CONTROL (STABILIZED CONSTRUCTION ENTRANCE/EXIT GRAVEL PADS)
1317	*LF*		8101021 EROSION CONTROL (WATTLES)(9")

EROSION CONTROL BMP LOCATIONS:

Item 8050003 Seeding (Class II) shall be installed in all disturbed areas and/or at locations directed by the Engineer.

Item 8101018 Erosion Control (Stabilized Construction Entrance/Exit Gravel Pad) shall be installed per Detail E2 of the project plans at locations directed by the Engineer.

Item 8101021 Erosion Control (Wattles)(9") shall be installed per Detail E1 of the project plans at fill slopes, and/or locations directed by the Engineer.

REGISTERED LANDSCAPE ARCHITECT
CERTIFICATE NO. 50615
ANNE S. DeBOARD
Date Signed 08/14/26
ARIZONA, U.S.A.

	NAME	DATE
DESIGN	ME	08/26
DRAWN	ME	08/26
CHECKED	ASD	08/26

Kimley»Horn
© 2026 KIMLEY-HORN AND ASSOCIATES, INC.

ARIZONA DEPARTMENT OF TRANSPORTATION
PROJECT DELIVERY AND OPERATIONS DIVISION
PROJECT MANAGEMENT GROUP

EROSION CONTROL
GENERAL NOTES & QUANTITIES

ROUTE I-10
MILEPOST
STRUCTURE NO.

F.H.W.A. Arizona Division

STATE	PROJECT NO.	FEDERAL ID NO.	SHEET NO.	TOTAL SHEETS	RECORD DRAWING
ARIZ.	010 CH 383	010-F(238)T	186	200	

LOCATION SAN SIMON PORT OF ENTRY (POE)

DWG NO. R-01.02

TRACS NO. F0728 01C

____ OF____

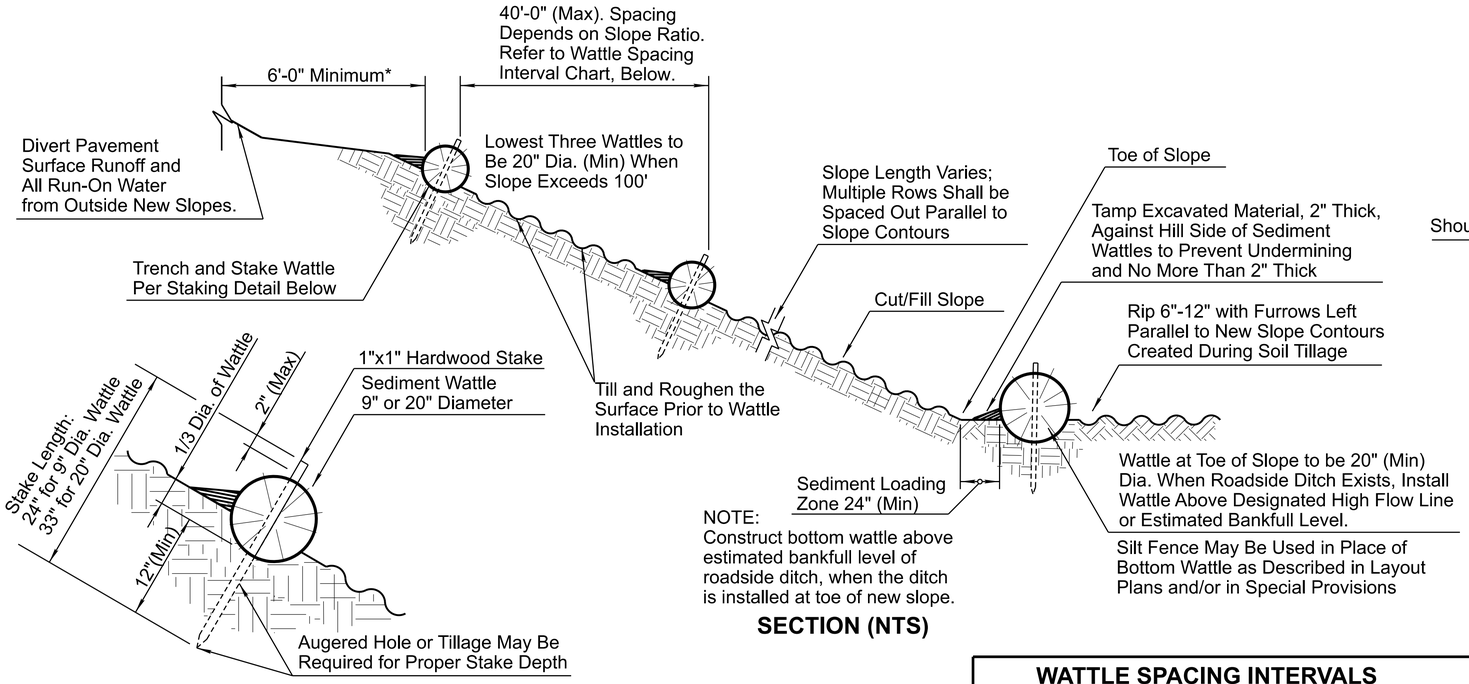

SEDIMENT WATTLE STAKING DETAIL (NTS)

SECTION (NTS)

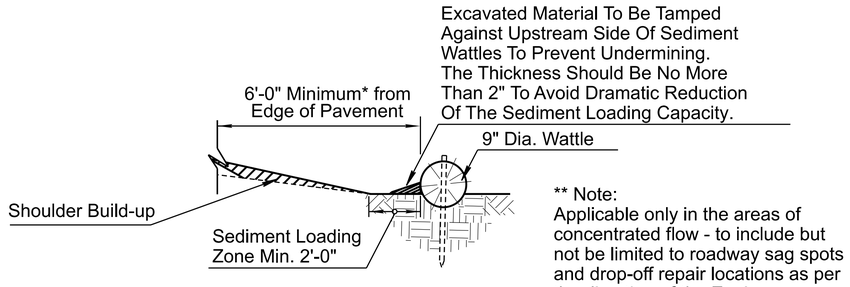

** Note:
Applicable only in the areas of concentrated flow - to include but not be limited to roadway sag spots and drop-off repair locations as per the direction of the Engineer.

NEW SHOULDER BUILDUP ** PROTECTION SECTION (NTS)

WATTLE SPACING INTERVALS	
Slope Ratio (H:V)	Maximum Spacing Interval
2:1	10'
3:1	20'
4:1	30'
5:1	40'
6:1	40'

* Notes:
1) Top Row Shall Not be Placed within 6'-0" of Edge of Pavement and 9'-0" from Outside Surface of Barrier.
2) For erosive soils, place rows of wattles closer together.
3) For soils with low erosive potential, place rows of wattles further apart.

NOTES:

1. Install Sediment Wattles as slopes are constructed to grade or as directed by the Engineer. Select, install and maintain in conformance with manufacturers' specifications to meet site conditions for slope protection and in accordance with good engineering practices. No Sediment Wattles shall be installed in urban freeway medians, nor where cable barrier systems are employed.
2. Sediment Wattles shall be in continuous contact with trench bottom and sides. Do not overlap wattle ends on top of each other. A 20" Dia. wattle may be made from 2-3 rolled excelsior or straw blankets.
3. Butt adjoining wattles tightly against each other. Drive the first end stake of the second wattle at an angle toward the first wattle to help abut them tightly.
4. Repair any rills or gullies promptly. Make field adjustments and corrections of Wattle CM/BMP immediately if it is causing flooding, erosion, and/or affecting roadway safety.
5. Construction of cut slopes 2:1 and steeper in soil and rock materials that can be ripped shall be constructed, whenever possible, by Minibenching. Refer to Slope Minibenching CM/BMP Detail.
6. Loosening surface soil is not required where Minibenches are used. For seeded areas, tillage shall be performed to form minor ridges and furrows parallel to new slope contours and as specified in Section 805 of the Specifications and these project special provisions.
7. Divert and direct run-on water from outside of the slopes to the spillways and/or rock riprap/rock mulch. Diversion dikes and/or ditches are necessary on natural undisturbed slopes beyond the top limits of new slopes to divert run-on water.
8. Installation and maintenance of Sediment Wattle CMs/BMPs shall not negatively impact traffic safety, nor the designed function of roadway or bridge drainage facilities.
9. Install and maintain Sediment Wattle CMs/BMPs to carry the stormwater of at least 2-year, 24-hour events.
10. The Sediment Wattle CM/BMP's pay/bid item shall include all materials used for this CM/BMP: all ground preparation, furnishing, installing, maintenance, final removal, and disposal of this temporary CM/BMP, as well as returning the area to an acceptable condition as approved by the Engineer.
11. Refer to Specification Section 810-2.06(C) for Sediment Wattle material specifications.
12. Make field adjustments and corrections to ensure NO sensitive biological resources (native species / habitats) will be adversely impacted.

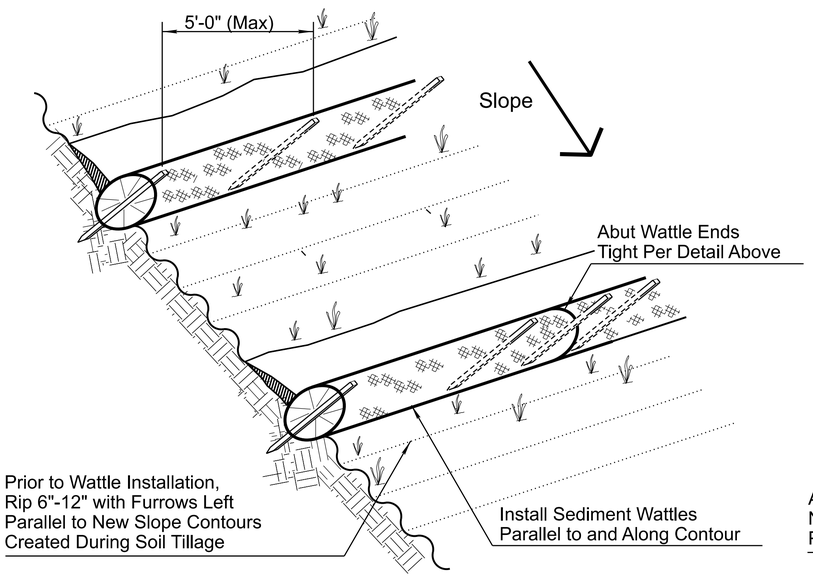

SEDIMENT WATTLE LAYOUT (NTS)

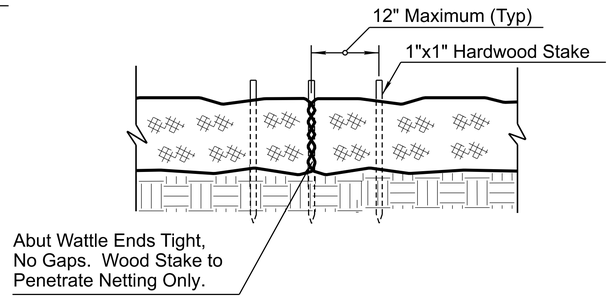

SEDIMENT WATTLE OVERLAP (NTS)

DETAIL E1

SEDIMENT WATTLE

REGISTERED LANDSCAPE ARCHITECT
50615
ANNE S. DeBOARD
Date Signed 06/04/2026
ARIZONA, U.S.A.

	NAME	DATE
DESIGN	ME	08/26
DRAWN	ME	08/26
CHECKED	ASD	08/26

Kimley»Horn
© 2026 KIMLEY-HORN AND ASSOCIATES, INC.

ARIZONA DEPARTMENT OF TRANSPORTATION
PROJECT DELIVERY AND OPERATIONS DIVISION
PROJECT MANAGEMENT GROUP
STORMWATER QUALITY PROTECTION & EROSION/SEDIMENT CONTROL DETAILS

ROUTE I-10
MILEPOST
STRUCTURE NO.

F.H.W.A. Arizona Division

STATE	PROJECT NO.	FEDERAL ID NO.	SHEET NO.	TOTAL SHEETS	RECORD DRAWING
ARIZ.	010 CH 383	010-F(238)T	187	200	

LOCATION SAN SIMON PORT OF ENTRY (POE)

TRACS NO. F0728 01C

DWG NO. R-01.03

____ OF____

$TIME$ $DATE$ $USERNAME$ $FILE$

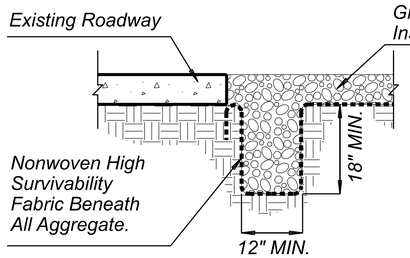

EDGE TREATMENT TRENCHING
TYPICAL SECTION (NTS)

NOTES:

1. Install nonwoven fabric when water is applied for construction vehicle/equipment cleaning on Gravel Pad.
2. Edge treatment trenching and nonwoven fabric shall not be required if NO wash water is used for vehicle/equipment cleaning.
3. The depth of Gravel Pad varies from 6" to 12" based on the necessities of construction vehicle/equipment as per the approval of the Engineer.

BIRD'S EYE VIEW (NTS)

NOTES:

1. Install Construction Entrance/Exit Gravel Pad CM/BMP for traffic entering or exiting a construction site where sedimentation, clay, silt or other pollutants can be tracked onto public roads and/or adjacent water bodies, as approved by the Engineer. It may also be applied for construction entrance/exit wind erosion/dust control, as approved by the Engineer.
2. Locate new Construction Entrance(s)/Exit(s) at appropriate project entrance/exit points as determined in field with the approval of the Engineer. Relocate Stabilized Construction Entrance/Exit Gravel Pad CM/BMP as needed as project progresses. Replace Rock Mulch materials in drive paths when dirt or mud accumulates.
3. Nonwoven High Survivability Fabric shall conform to the standards of Subsection 1014-4.04 of the specifications.
4. Rock Mulch materials shall be fractured/crushed rocks in angular shape and as defined in the Subsection 810-2.03 of the specifications. Natural river-run materials, especially rounded natural river rocks are not acceptable.
5. Make field adjustments and corrections of Construction Entrance/Exit Gravel Pad CM/BMP immediately if it is causing flooding and/or affecting roadway safety.
6. When paid separately, the Construction Entrance/Exit Gravel Pad CM/BMP's pay/bid item shall include all materials used for this CM/BMP: all ground preparation, furnishing, installing, final removal, and disposal of this temporary CM/BMP, as well as returning the area to an acceptable condition as approved by the Engineer.
7. * Fence/barricade pay/bid item shall not be included as a component of the Construction Entrance/Exit Gravel Pad CM/BMP pay/bid item.
8. Make field adjustments and corrections to ensure NO sensitive biological resources (native species / habitats) will be adversely impacted.

DETAIL E2

CONSTRUCTION
ENTRANCE / EXIT GRAVEL PAD

R-DUST PROA-CONTROL ADVISOR — CERTIFICATE NO. 50615 — ANNE S. DeBOARD — 8TH SCHL. — ARIZONA, U.S.A.

	NAME	DATE
DESIGN	ME	08/26
DRAWN	ME	08/26
CHECKED	ASD	08/26

Kimley»Horn

© 2026 KIMLEY-HORN AND ASSOCIATES, INC.

ARIZONA DEPARTMENT OF TRANSPORTATION
PROJECT DELIVERY AND OPERATIONS DIVISION
PROJECT MANAGEMENT GROUP

EROSION CONTROL DETAIL

ROUTE	STATE	PROJECT NO.	FEDERAL ID NO.	SHEET NO.	TOTAL SHEETS	RECORD DRAWING
I-10	ARIZ.	010 CH 383	010-F(238)T	188	200	

MILEPOST

STRUCTURE NO.

F.H.W.A. Arizona Division

LOCATION: SAN SIMON PORT OF ENTRY (POE)

DWG NO. R-01.04

TRACS NO. F0728 01C

____ OF ____

8:23:28 AM 8/14/2026 TJ.Bulhoes K:\PHX_Roadway\Worksets\ADOT_PROJECTS_2022R3_10.12_291728040-F0728-SAN SIMON POE\dgn\Roadside\Erosion Control\f0728_ecd02.dgn

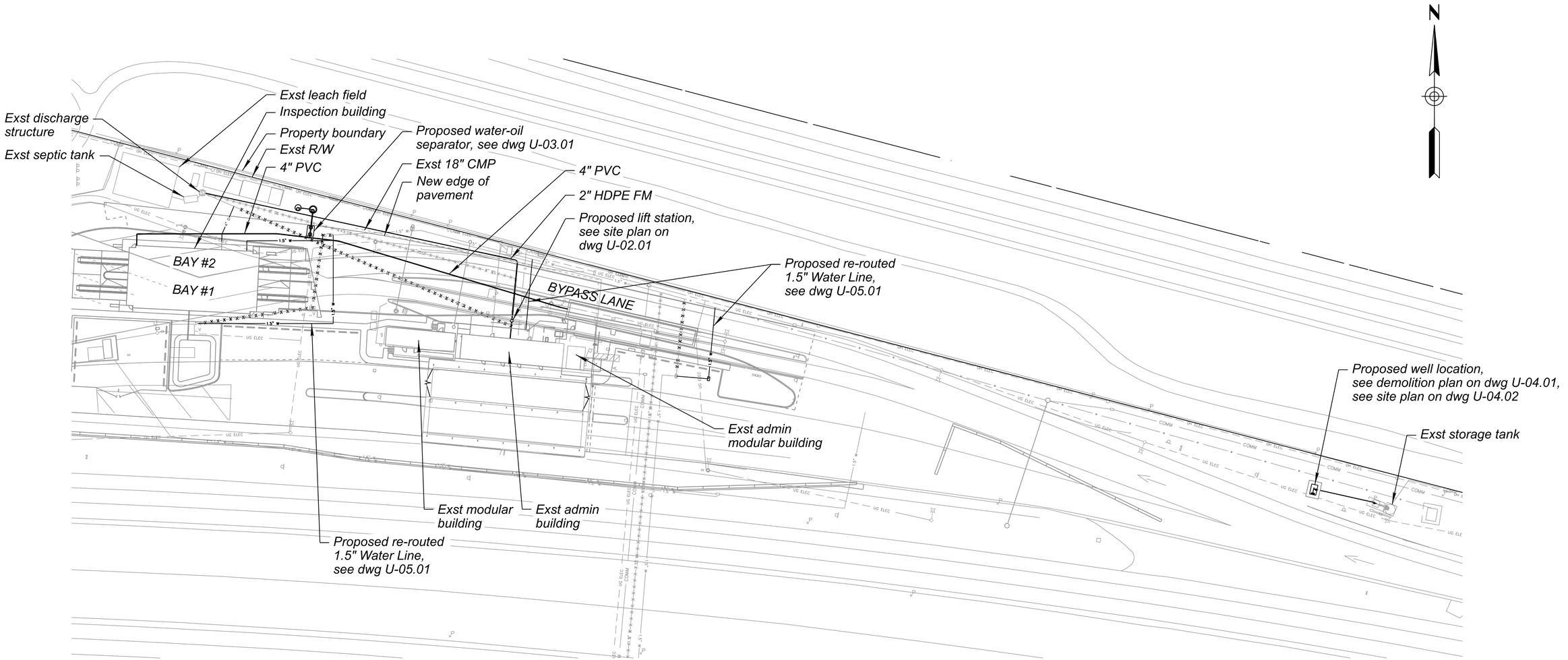

OVERALL SITE PLAN

Scale: 1" = 40'-0"

40 0 40 80 FEET
SCALE 1"=40'

Registered Professional Engineer Chemical
CERTIFICATE NO.
82420
BRANDON
PORTER
Date Signed 09/26/26
ARIZONA, USA
Expires 12/31/27

	NAME	DATE
DESIGN	TWK	09/26
DRAWN	DML	09/26
CHECKED	TWK	09/26

Kimley»Horn

© 2026 KIMLEY-HORN AND ASSOCIATES, INC.

ARIZONA DEPARTMENT OF TRANSPORTATION
PROJECT DELIVERY AND OPERATIONS DIVISION
PROJECT MANAGEMENT GROUP

OVERALL SITE PLAN

ROUTE I-10
MILEPOST
STRUCTURE NO.

F.H.W.A. Arizona Division	STATE	PROJECT NO.	FEDERAL ID NO.	SHEET NO.	TOTAL SHEETS	RECORD DRAWING
	ARIZ.	010 CH 383	010-F(238)T	189	200	

LOCATION SAN SIMON PORT OF ENTRY (POE)
DWG NO. U-01.01
TRACS NO. F0728 01C
___ OF ___

10:50:39 AM 9/22/2026 DJ.Lewchanin K:\PHX_Roadway\Worksets\ADOT_PROJECTS_2022R3_10.12_291728040-F0728-SAN SIMON POE\dgn\Utilities\f0728_overall_siteplan01.dgn

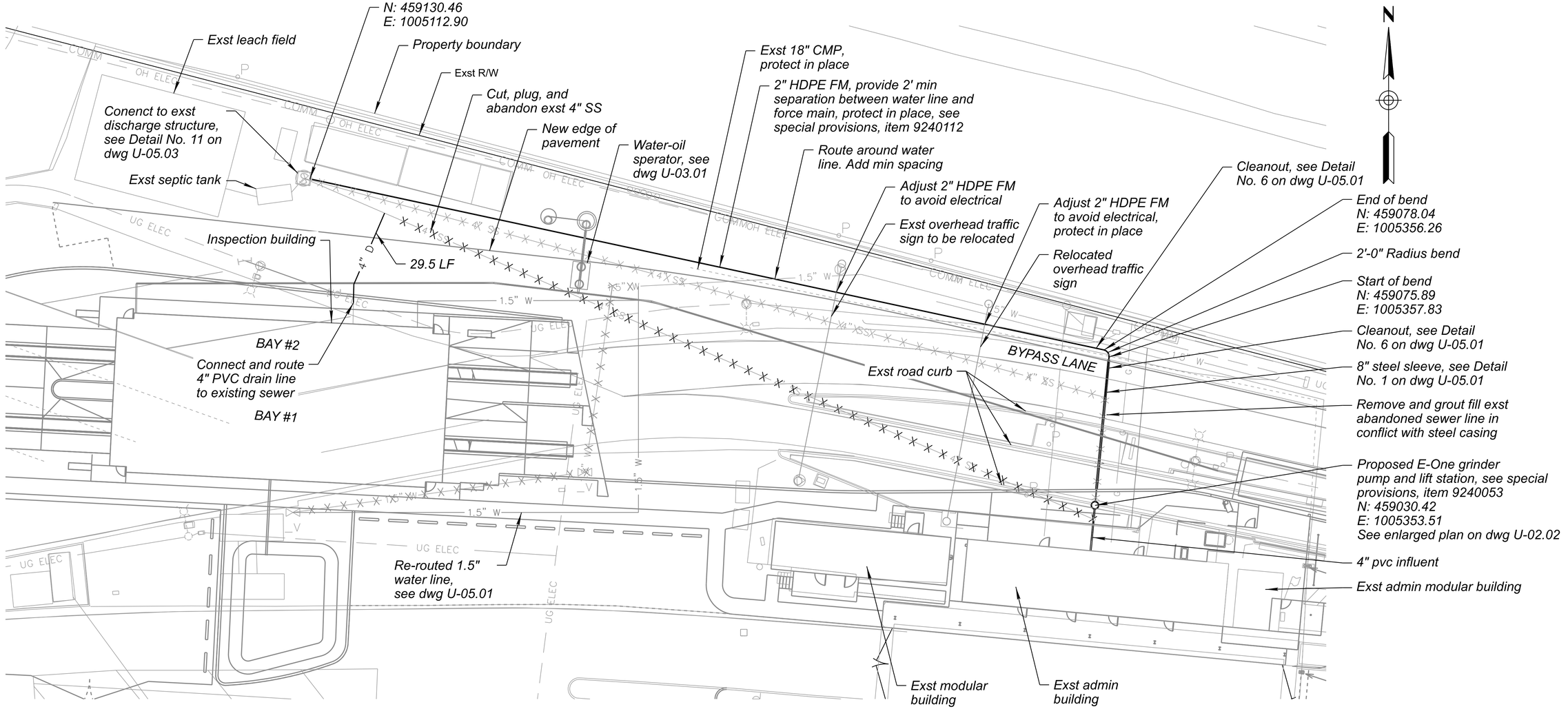

LIFT STATION SITE PLAN

Scale: 1/16" = 1'-0"

NOTES

1. *Sanitary sewer service shall be maintained throughout construction at all times. The contractor shall submit to the Engineer and ADOT, a plan prior to construction for approval for maintaining sanitary sewer service. The cost for maintaining sewer service and any associated bypass pumping shall be considered included in the cost of the sanitary sewer pipe installation.*
2. *PVC sanitary sewer pipe shall be ASTM D3034 SDR-35 for 15 inches and smaller in accordance with M.A.G. section 745 unless otherwise noted in the drawings. HDPE piping shall be ductile iron pipe size PE4710 DR-11 unless otherwise noted in the drawings.*
3. *Sanitary sewer testing shall be in accordance with M.A.G. section 611.*
4. *Sewer lines shall be constructed per M.A.G. section 615.*
5. *All sanitary sewer lines shall be installed with a minimum cover of 4 feet unless otherwise specified.*
6. *Pipe deflections shall be per manufacturer's recommendations.*
7. *Abandonment of existing sanitary sewer lines shall consist of the work, labor, materials, and equipment necessary to locate, cut, and plug the existing sanitary sewer line at the locations in plans while removing all materials in conflict with proposed sewer line. See special provisions, item 9240055.*
8. *Trench excavation, pipe embedment and backfill shall comply with M.A.G. section 601.*

16 0 16 32 FEET
SCALE 1/16"=1'-0"

Registered Professional Engineer Certificate No. 82420 BRANDON PORTER Date Signed 09/22/26 ARIZONA, U.S.A. Expires 12/31/27

	NAME	DATE
DESIGN	TWK	09/26
DRAWN	DML	09/26
CHECKED	TWK	09/26

Kimley»Horn
© 2026 KIMLEY-HORN AND ASSOCIATES, INC.

ARIZONA DEPARTMENT OF TRANSPORTATION
PROJECT DELIVERY AND OPERATIONS DIVISION
PROJECT MANAGEMENT GROUP

LIFT STATION
SITE PLAN

ROUTE	MILEPOST	STRUCTURE NO.
I-10		

F.H.W.A. Arizona Division	STATE	PROJECT NO.	FEDERAL ID NO.	SHEET NO.	TOTAL SHEETS	RECORD DRAWING
	ARIZ.	010 CH 383	010-F(238)T	190	200	

LOCATION SAN SIMON PORT OF ENTRY (POE)

DWG NO. U-02.01

TRACS NO. F0728 01C

___ OF ___

NOTE

1. See special provisions, item 9240053.

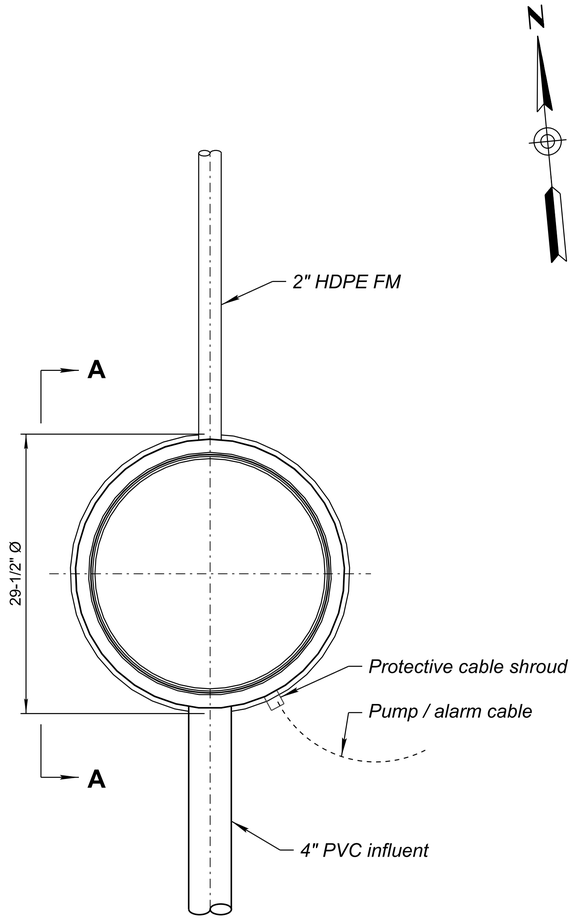

LIFT STATION ENLARGED PLAN

Scale: 1 1/2" = 1'-0"

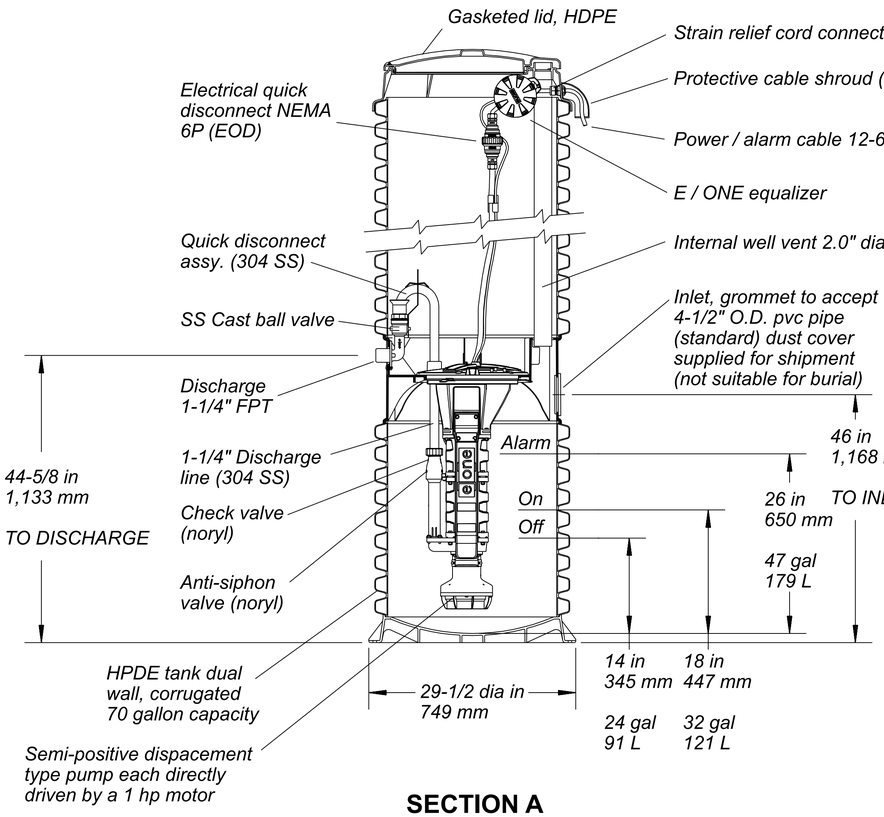

SECTION A

Scale: NTS



ISO VIEW

Scale: NTS

6" 0 6" 1 FEET

SCALE 1 1/2"=1'-0"

	NAME	DATE
DESIGN	TWK	09/26
DRAWN	DML	09/26
CHECKED	TWK	09/26

Registered Professional Engineer (Chemical) CERTIFICATE NO. 82420 BRANDON PORTER Date Signed 09/26/26 ARIZONA, USA Expires 12/31/27

Kimley»Horn

© 2026 KIMLEY-HORN AND ASSOCIATES, INC.

ARIZONA DEPARTMENT OF TRANSPORTATION
PROJECT DELIVERY AND OPERATIONS DIVISION
PROJECT MANAGEMENT GROUP

LIFT STATION
ENLARGED PLAN
AND SECTION

ROUTE I-10
MILEPOST
STRUCTURE NO.

F.H.W.A. Arizona Division	STATE	PROJECT NO.	FEDERAL ID NO.	SHEET NO.	TOTAL SHEETS	RECORD DRAWING
	ARIZ.	010 CH 383	010-F(238)T	191	200	

LOCATION SAN SIMON PORT OF ENTRY (POE)

DWG NO. U-02.02

TRACS NO. F0728 01C

____ OF____

10:46:35 AM 9/22/2026 DJ.Lewchanin K:\PHX_Roadway\Worksets\ADOT_PROJECTS_2022R3_10.12_291728040-F0728-SAN SIMON POE\dgn\Utilities\f0728_LSplan&sect01.dgn

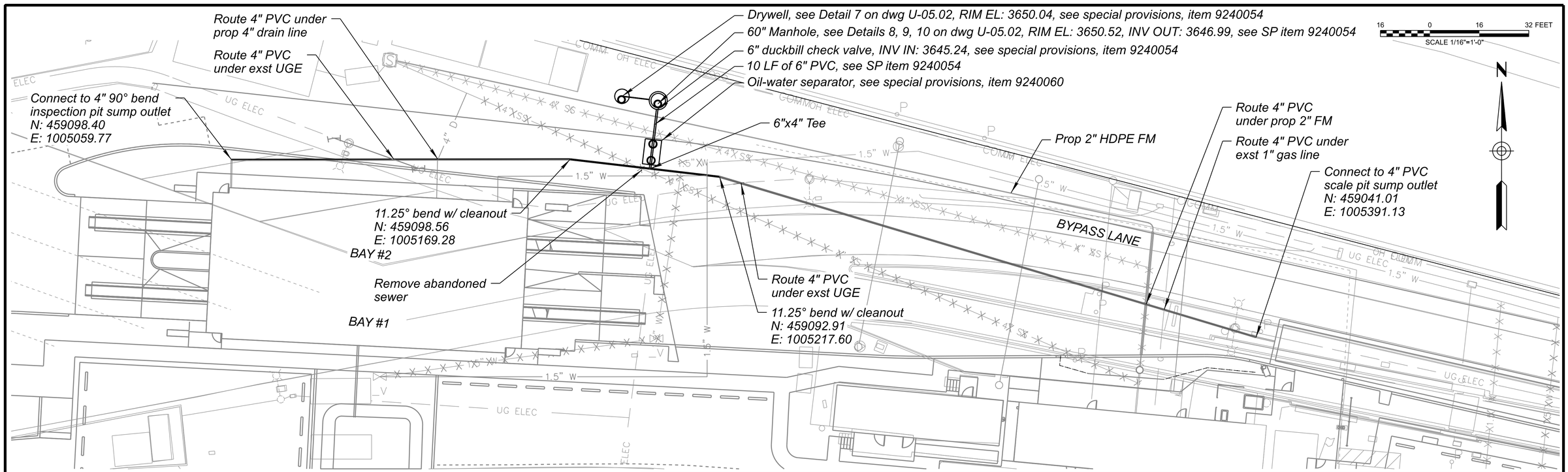

Registered Professional Engineer (Chamberlain)
CERTIFICATE NO. 82420
BRANDON PORTER
Date Signed 09/27/26
ARIZONA, USA
Expires 12/31/27

	NAME	DATE
DESIGN	BPP	09/26
DRAWN	DML	09/26
CHECKED	TWK	09/26

Kimley»Horn

© 2026 KIMLEY-HORN AND ASSOCIATES, INC.

ARIZONA DEPARTMENT OF TRANSPORTATION
PROJECT DELIVERY AND OPERATIONS DIVISION
PROJECT MANAGEMENT GROUP

WATER-OIL SEPARATOR
PLAN AND PROFILE

ROUTE I-10
MILEPOST
STRUCTURE NO.

F.H.W.A. Arizona Division	STATE	PROJECT NO.	FEDERAL ID NO.	SHEET NO.	TOTAL SHEETS	RECORD DRAWING
	ARIZ.	010 CH 383	010-F(238)T	192	200	

LOCATION SAN SIMON PORT OF ENTRY (POE)

TRACS NO. F0728 01C

DWG NO. U-03.01

___ OF ___

10:48:05 AM 9/22/2026 DJ.Lewchanin K:\PHX_Roadway\Worksets\ADOT_PROJECTS_2022R3_10.12_291728040-F0728-SAN SIMON POE\dgn\Utilities\f0728_oilseparatorplan&profile01.dgn



N

WELL DEMOLITION PLAN

Scale: 3/16" = 1'-0"

LEGEND

- *Denotes abandon in place*
- *Denotes relocate or protect in place*

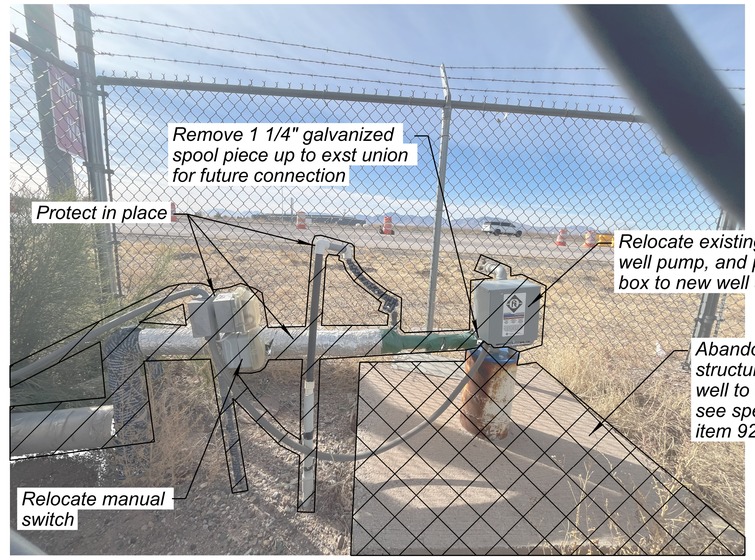

DETAIL NO. 1

Scale: NTS

4 0 4 8 FEET
SCALE 3/16"=1'-0"

Registered Professional Engineer (Chemical)
CERTIFICATE NO.
82420
BRANDON
PORTER
Date Signed 09/22/26
ARIZONA, USA
Expires 12/31/27

	NAME	DATE
DESIGN	TWK	09/26
DRAWN	DML	09/26
CHECKED	TWK	09/26

Kimley»Horn
© 2026 KIMLEY-HORN AND ASSOCIATES, INC.

ARIZONA DEPARTMENT OF TRANSPORTATION
PROJECT DELIVERY AND OPERATIONS DIVISION
PROJECT MANAGEMENT GROUP

WELL DEMOLITION
PLAN AND DETAIL

ROUTE	MILEPOST	STRUCTURE NO.
I-10		

F.H.W.A. Arizona Division	STATE	PROJECT NO.	FEDERAL ID NO.	SHEET NO.	TOTAL SHEETS	RECORD DRAWING
	ARIZ.	010 CH 383	010-F(238)T	193	200	

LOCATION SAN SIMON PORT OF ENTRY (POE)

DWG NO. U-04.01

TRACS NO. F0728 01C

____ OF ____

10:52:00 AM 9/22/2026 DJ.Lewchanin K:\PHX_Roadway\Worksets\ADOT_PROJECTS_2022R3_10.12_291728040-F0728-SAN SIMON POE\dgn\Utilities\f0728_welldemo01.dgn

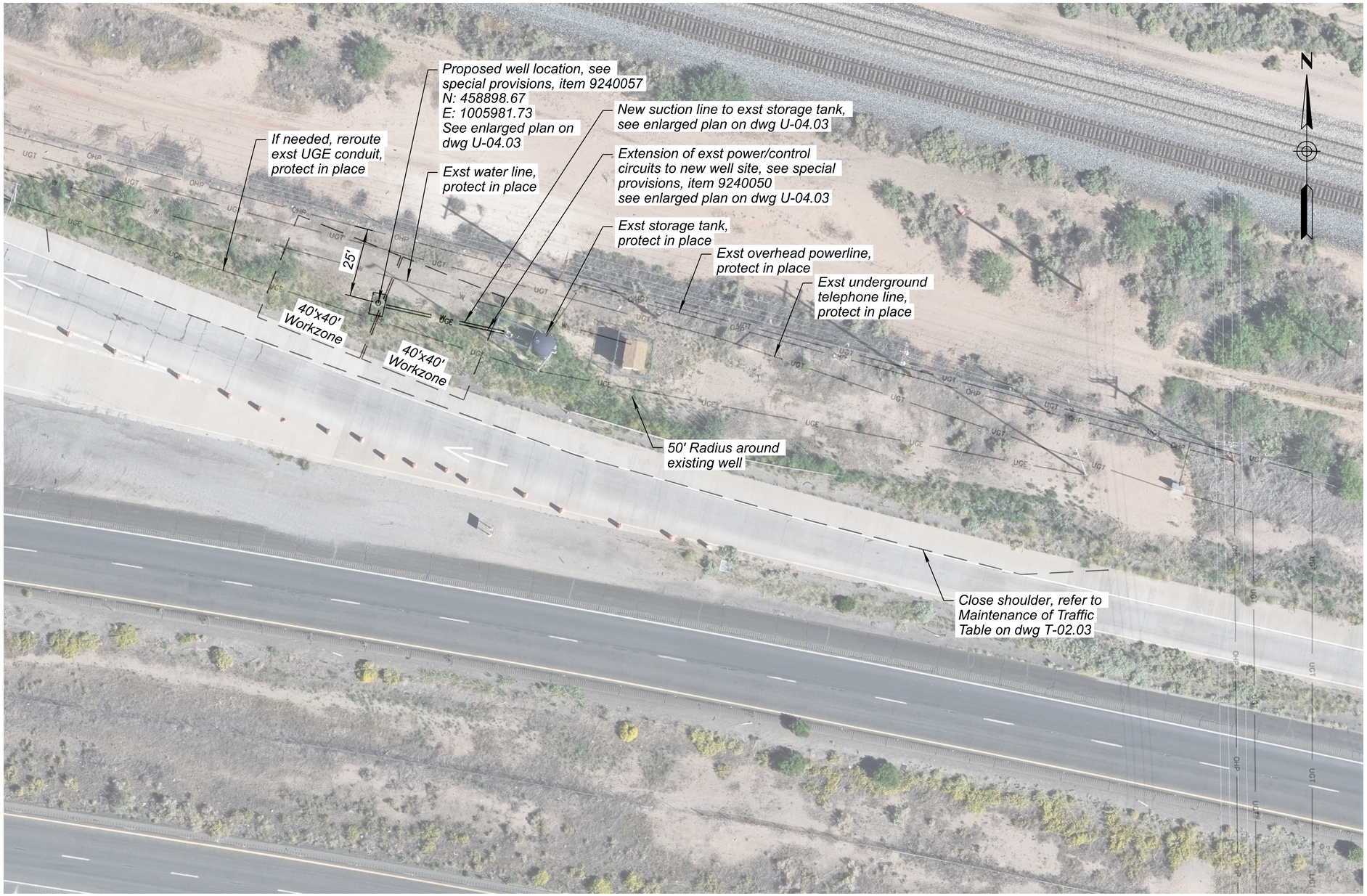

NOTES

1. *Purposed well site needs to be at minimum 6' from underground utilities and 25' from overhead power lines.*

WELL SITE PLAN

Scale: 1" = 20'-0"

20 0 20 40 FEET
SCALE 1"=20'

Registered Professional Engineer (Firm/Individual) CERTIFICATE NO. 82420 BRANDON PORTER Date Signed 9/22/26 ARIZONA, USA
Expires 12/31/27

	NAME	DATE
DESIGN	TWK	09/26
DRAWN	DML	09/26
CHECKED	TWK	09/26

Kimley»Horn
© 2026 KIMLEY-HORN AND ASSOCIATES, INC.

ARIZONA DEPARTMENT OF TRANSPORTATION
PROJECT DELIVERY AND OPERATIONS DIVISION
PROJECT MANAGEMENT GROUP

WELL SITE PLAN

ROUTE I-10
MILEPOST
STRUCTURE NO.

F.H.W.A. Arizona Division

STATE	PROJECT NO.	FEDERAL ID NO.	SHEET NO.	TOTAL SHEETS	RECORD DRAWING
ARIZ.	010 CH 383	010-F(238)T	194	200	

LOCATION SAN SIMON PORT OF ENTRY (POE)
DWG NO. U-04.02
TRACS NO. F0728 01C
___ OF___

10:54:46 AM 9/22/2026 DJ.Lewchanin K:\PHX_Roadway\Worksets\ADOT_PROJECTS_2022R3_10.12_291728040-F0728-SAN SIMON POE\dgn\Utilities\f0728_wellsiteplan01.dgn

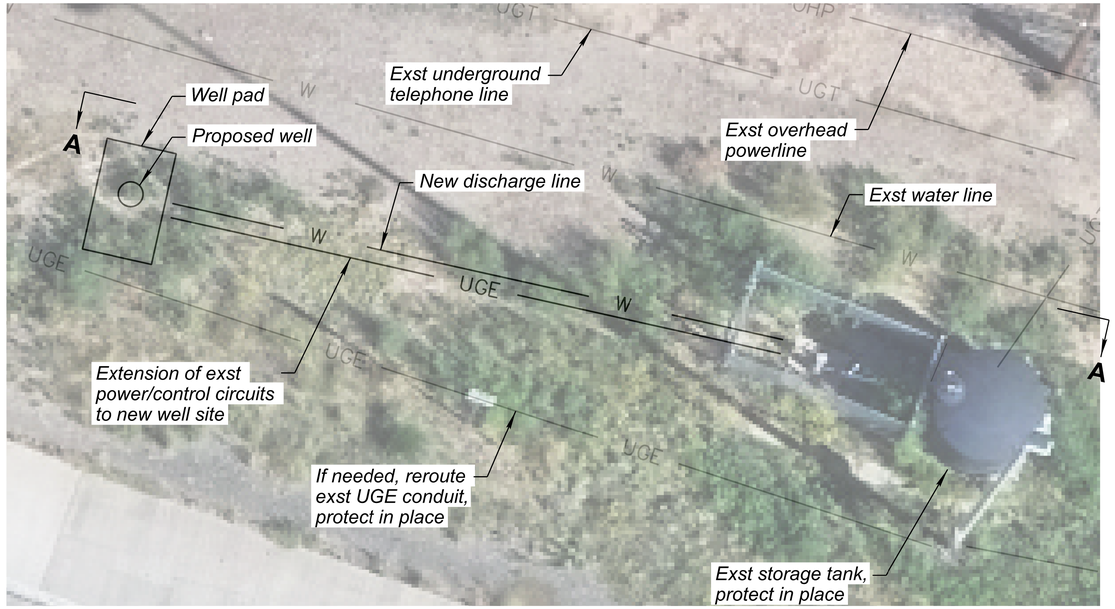

WELL ENLARGED PLAN

Scale: 3/16" = 1'-0"

N

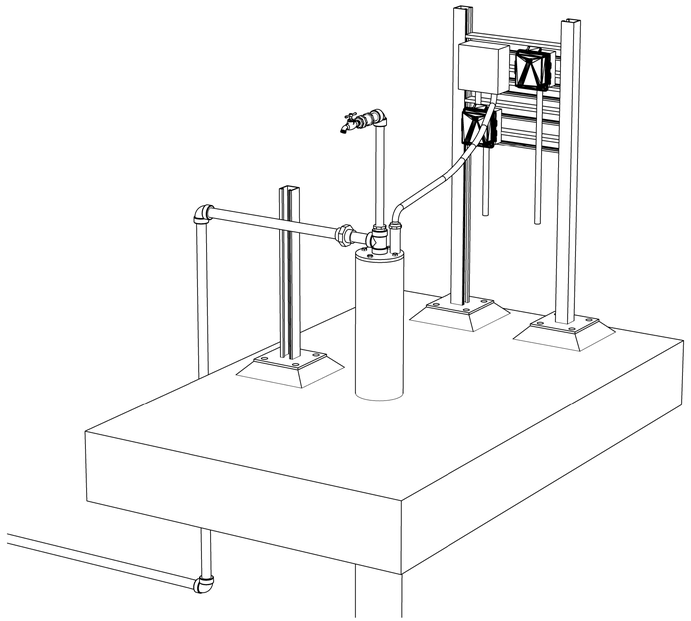

ISO VIEW

Scale: NTS

NOTE

1. For well relocation see special provisions, item 9240050.

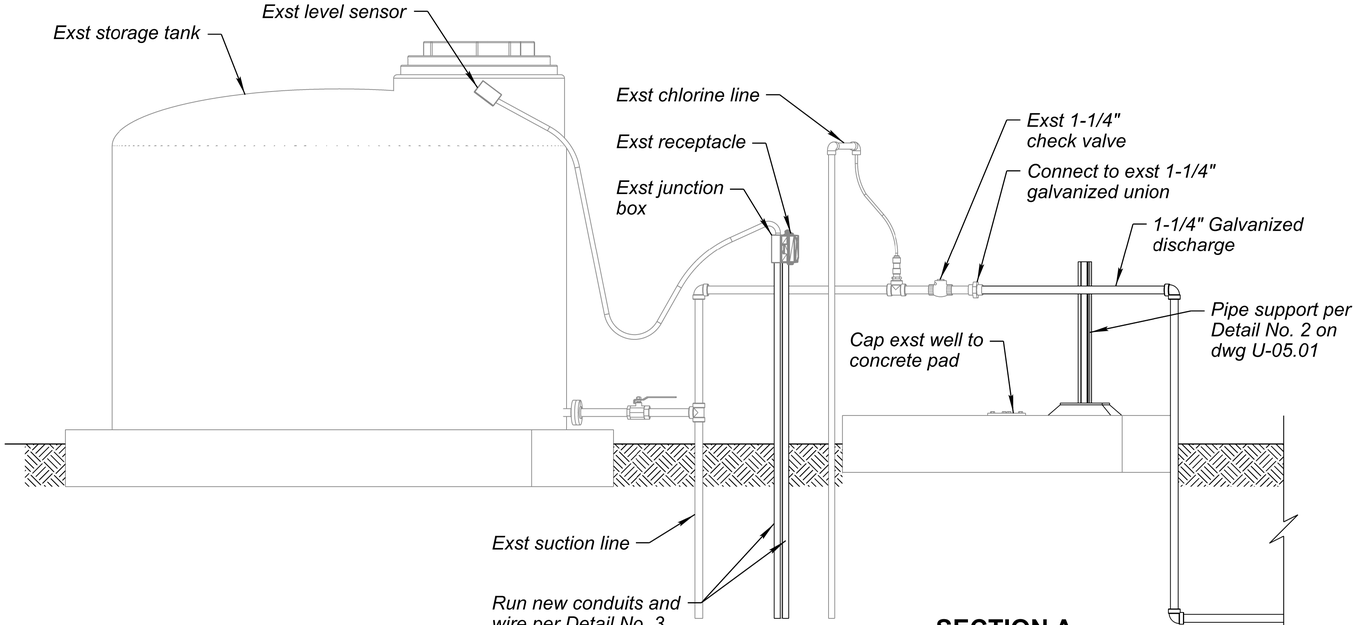

SECTION A

Scale: 3/4 = 1'-0"

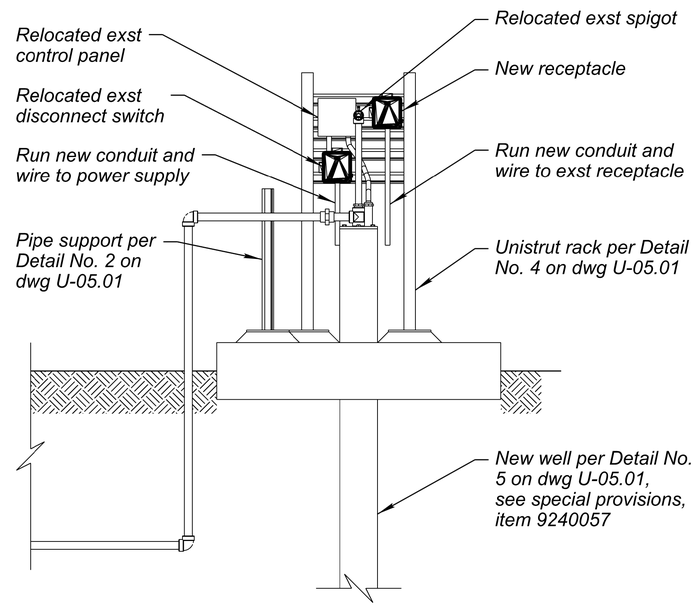

1 0 1 2 FEET
SCALE 3/4"=1'-0"

4 0 4 8 FEET
SCALE 3/16"=1'-0"

Registered Professional Engineer (Not Licensed in Arizona)
CERTIFICATE NO. 82420
BRANDON PORTER
Date Signed 12/31/26
ARIZONA, USA
Expires 12/31/27

	NAME	DATE
DESIGN	TWK	09/26
DRAWN	DML	09/26
CHECKED	TWK	09/26

Kimley»Horn
© 2026 KIMLEY-HORN AND ASSOCIATES, INC.

ARIZONA DEPARTMENT OF TRANSPORTATION
PROJECT DELIVERY AND OPERATIONS DIVISION
PROJECT MANAGEMENT GROUP

WELL ENLARGED
PLAN AND SECTION

ROUTE I-10
MILEPOST
STRUCTURE NO.

F.H.W.A. Arizona Division

STATE	PROJECT NO.	FEDERAL ID NO.	SHEET NO.	TOTAL SHEETS	RECORD DRAWING
ARIZ.	010 CH 383	010-F(238)T	195	200	

LOCATION SAN SIMON PORT OF ENTRY (POE)

TRACS NO. F0728 01C

DWG NO. U-04.03

___ OF ___

10:53:58 AM 9/22/2026 DJ.Lewchanin K:\PHX_Roadway\Worksets\ADOT_PROJECTS_2022R3_10.12_291728040-F0728-SAN SIMON POE\dgn\Utilities\f0728_wellplan&sect01.dgn

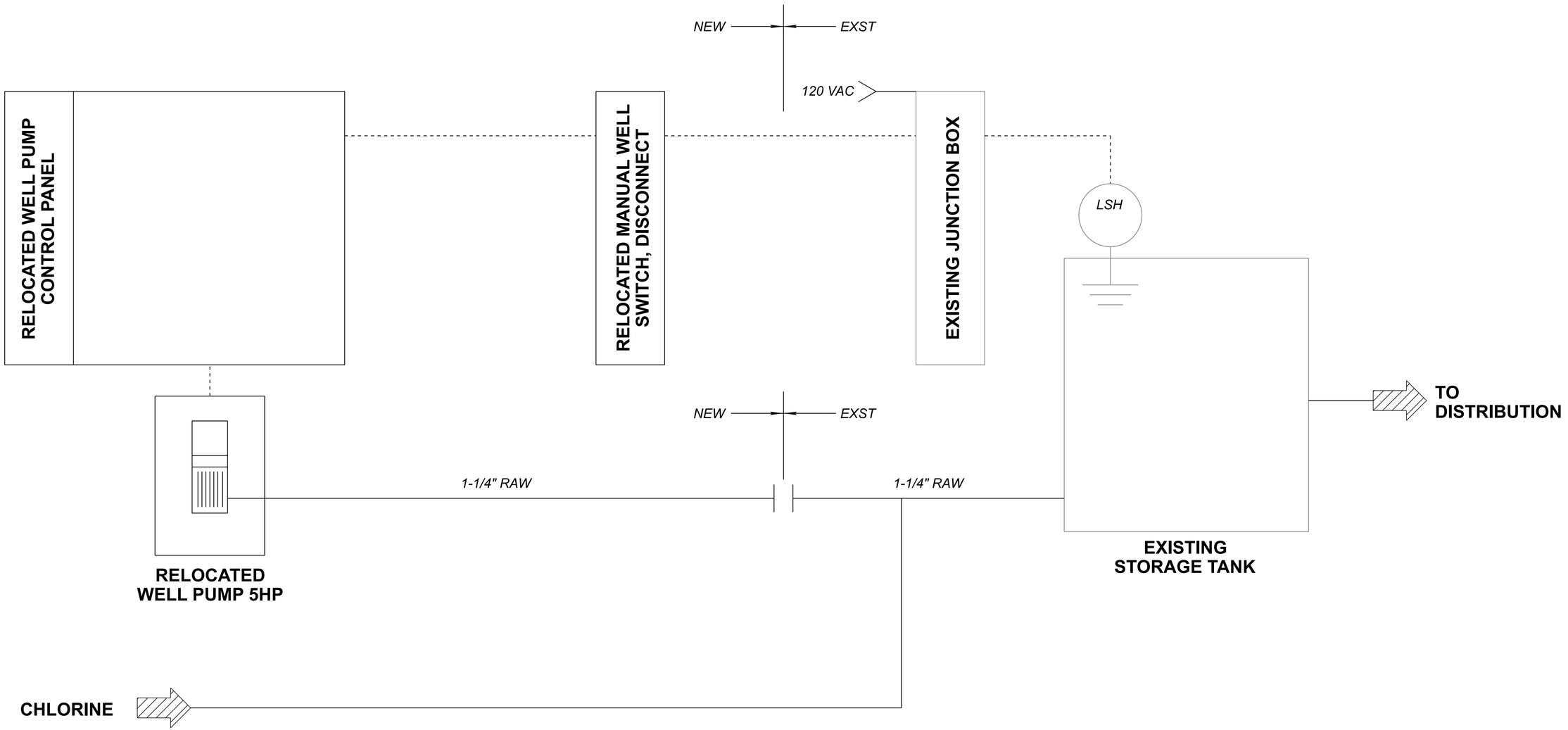

Registered Professional Engineer (Civil) CERTIFICATE NO. 82420 BRANDON PORTER Date Signed 09/22/26 ARIZONA, U.S.A.

Expires 12/31/27

	NAME	DATE
DESIGN	TWK	09/26
DRAWN	DML	09/26
CHECKED	TWK	09/26

Kimley»Horn

© 2026 KIMLEY-HORN AND ASSOCIATES, INC.

ARIZONA DEPARTMENT OF TRANSPORTATION
PROJECT DELIVERY AND OPERATIONS DIVISION
PROJECT MANAGEMENT GROUP

WELL PIPING AND INSTRUMENTATION DIAGRAM

ROUTE I-10
MILEPOST
STRUCTURE NO.

F.H.W.A. Arizona Division	STATE	PROJECT NO.	FEDERAL ID NO.	SHEET NO.	TOTAL SHEETS	RECORD DRAWING
	ARIZ.	010 CH 383	010-F(238)T	196	200	

LOCATION SAN SIMON PORT OF ENTRY (POE)

DWG NO. U-04.04

TRACS NO. F0728 01C

____ OF____

10:53:07 AM 9/22/2026 DJ.Lewchanin K:\PHX_Roadway\Worksets\ADOT_PROJECTS_2022R3_10.12_291728040-F0728-SAN SIMON POE\dgn\Utilities\f0728_wellP&ID01.dgn

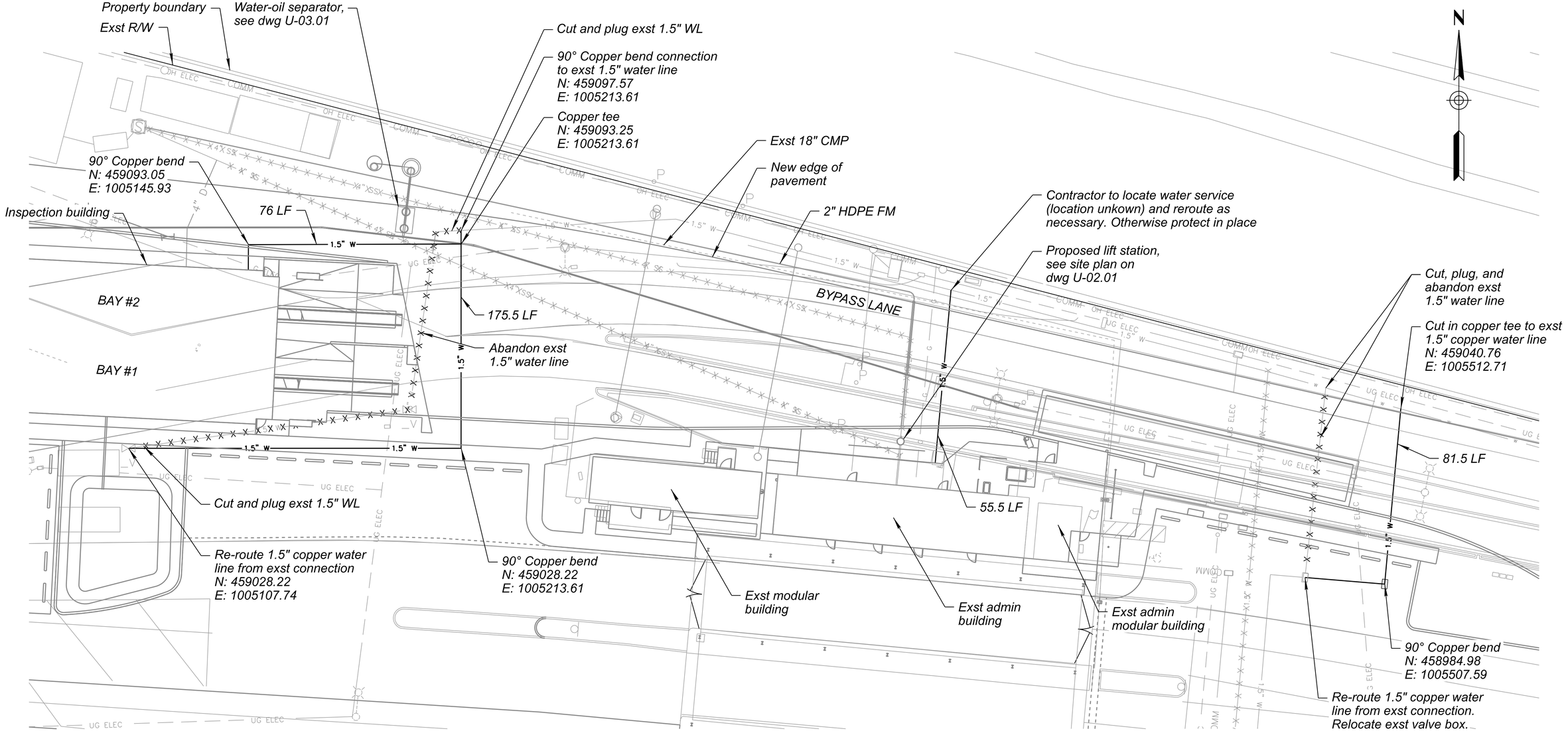

NOTES

1. All water service lines shall be installed in accordance with the 2024 IPC and installed by a licensed plumber.
2. All water service abandonment, cut, and plugs, shall be in accordance with 2024 IPC section 600 standards.

WATER SERVICE LINE PLAN

Scale: 1/16" = 1'-0"

Registered Professional Engineer (Chemuell) CERTIFICATE NO. 82420 BRANDON PORTER Date Signed 09/26/26 ARIZONA USA Expires 12/31/27

	NAME	DATE
DESIGN	TWK	09/26
DRAWN	DML	09/26
CHECKED	TWK	09/26

Kimley»Horn

© 2026 KIMLEY-HORN AND ASSOCIATES, INC.

ARIZONA DEPARTMENT OF TRANSPORTATION
PROJECT DELIVERY AND OPERATIONS DIVISION
PROJECT MANAGEMENT GROUP

WATER SERVICE LINE PLAN

ROUTE I-10
MILEPOST
STRUCTURE NO.

F.H.W.A. Arizona Division	STATE	PROJECT NO.	FEDERAL ID NO.	SHEET NO.	TOTAL SHEETS	RECORD DRAWING
	ARIZ.	010 CH 383	010-F(238)T	197	200	

LOCATION SAN SIMON PORT OF ENTRY (POE)
DWG NO. U-05.01
TRACS NO. F0728 01C
___ OF ___

10:51:15 AM 9/22/2026 DJ.Lewchanin K:\PHX_Roadway\Worksets\ADOT_PROJECTS_2022R3_10.12_291728040-F0728-SAN SIMON POE\dgn\Utilities\f0728_waterserviceplan01.dgn

STEEL CASING DETAIL NOTES

1. *Casing spacers shall be constructed of circular stainless steel bands, which bolt together forming a shell around the carrier pipe as manufactured by cascad, psi, aps or approved equal. The casing spacer shall be lined with a ribbed EDPM extrusion with a retaining section that overlaps the edges of the shell and prevents slippage. The spaceer shall be designed with risers and runners to support the carrier pipe within the casing and maintain a sufficient clearance between the casing inside diameter and the carrier pipe outside diameter in order to pull carrier pipe through casing. The runners shall be dielectric polymer with ends of the runners beveled to facilitate installation over rough weld beads or the weld ends of misaligned or deformed casing pipe. The runners shall be attached to support structures (risers) at appropriate positions to properly support the carrier pipe within the casing and to ease installation. The riser shall be contructed of 10-gauge T-304 stainless steel with a height to be determined based on the required annular space between the carrier pipe outside diameter and the casing inside diameter. The spacers shall be spaced per the plans.*

2. *All joints to be restrained within steel casing.*

3. *See special provisions, item 9240112.*

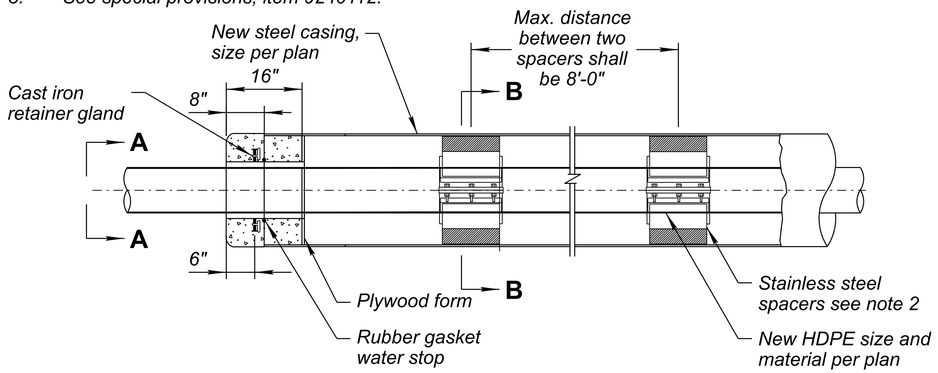

DETAIL 1: STEEL CASING

Scale: NTS

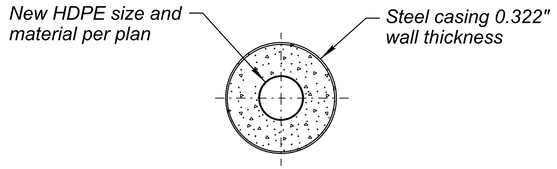

SECTION A (EACH END)

Scale: NTS

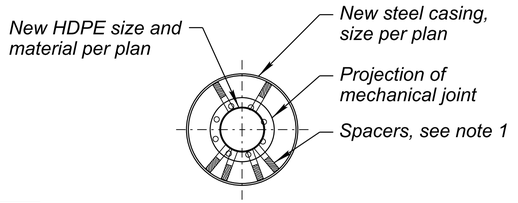

SECTION B

Scale: NTS

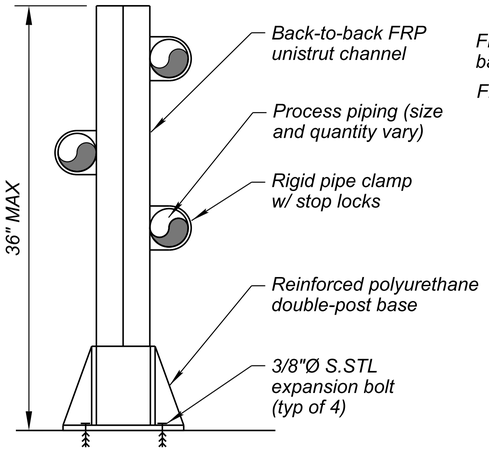

NOTE

1. *See special provisions, item 9240050.*

DETAIL 2: PIPE SUPPORT

Scale: NTS

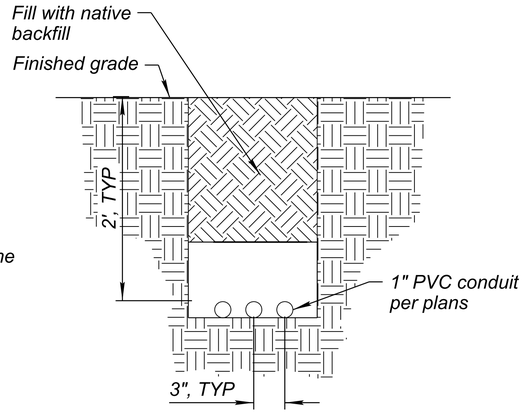

NOTE

1. *See special provisions, item 9240050.*

DETAIL 3: DUCT BANK

Scale: NTS

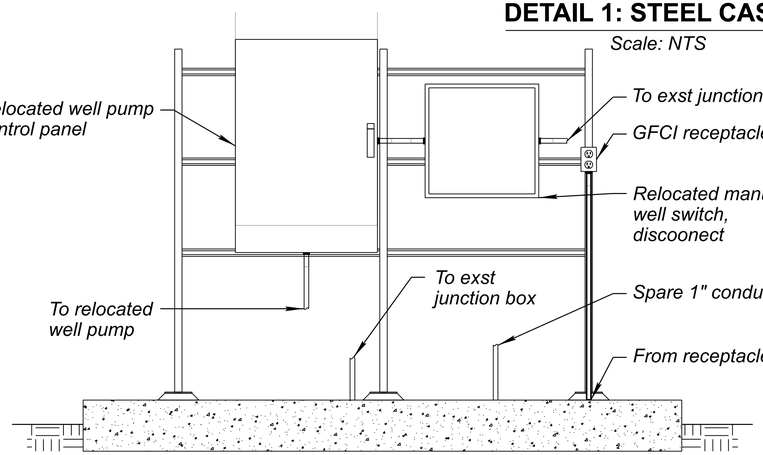

NOTE

1. *See special provisions, item 9240050.*

DETAIL 4: UNISTRUT RACK

Scale: NTS

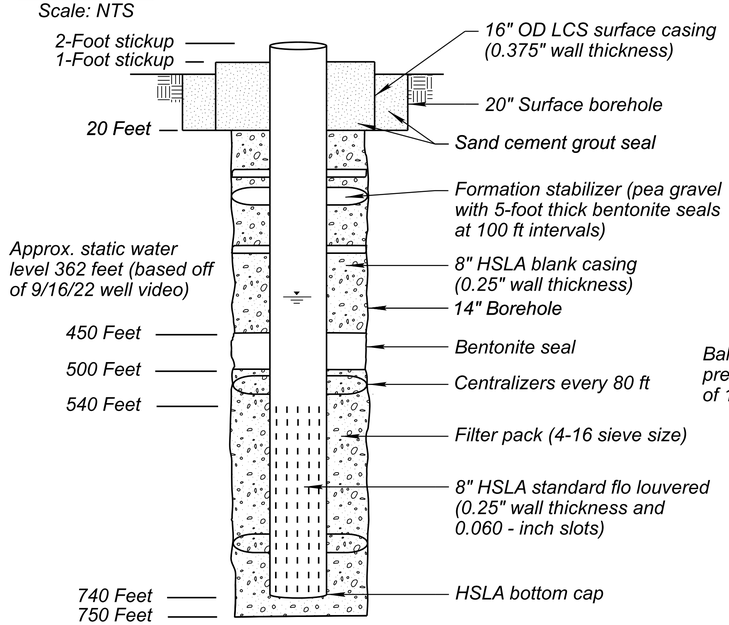

NOTE

1. *See special provisions, item 9240057.*

DETAIL 5: WELL DETAIL

Scale: NTS

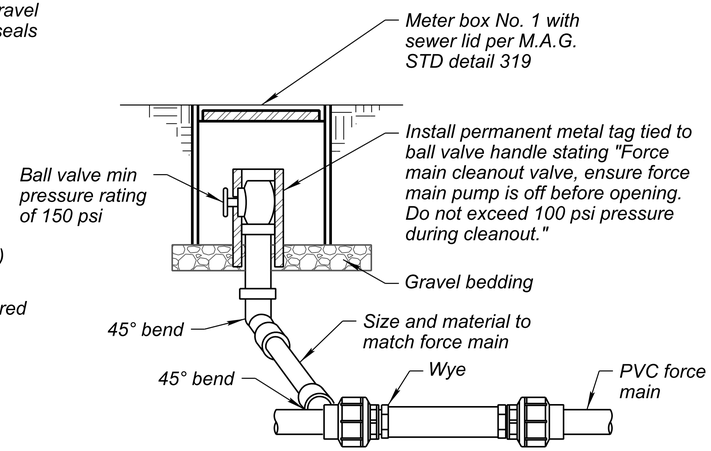

NOTE

1. *See special provisions, item 9240112.*

DETAIL 6: CLEANOUT DETAIL

Scale: NTS

Registered Professional Engineer (Chemical) CERTIFICATE NO 82420 BRANDON PORTER Date Signed 09/22/26 ARIZONA, U.S.A. Expires 12/31/27

	NAME	DATE
DESIGN	TWK	09/26
DRAWN	DML	09/26
CHECKED	TWK	09/26

Kimley»Horn
© 2026 KIMLEY-HORN AND ASSOCIATES, INC.

ARIZONA DEPARTMENT OF TRANSPORTATION
PROJECT DELIVERY AND OPERATIONS DIVISION
PROJECT MANAGEMENT GROUP

UTILITY DETAILS 1

ROUTE I-10
MILEPOST
STRUCTURE NO.

F.H.W.A. Arizona Division	STATE	PROJECT NO.	FEDERAL ID NO.	SHEET NO.	TOTAL SHEETS	RECORD DRAWING
	ARIZ.	010 CH 383	010-F(238)T	198	200	

LOCATION SAN SIMON PORT OF ENTRY (POE)

DWG NO. U-06.01

TRACS NO. F0728 01C

____ OF ____

10:44:08 AM 9/22/2026 DJ.Lewchanin K:\PHX_Roadway\Worksets\ADOT_PROJECTS_2022R3_10.12_291728040-F0728-SAN SIMON POE\dgn\Utilities\f0728_dtls01.dgn

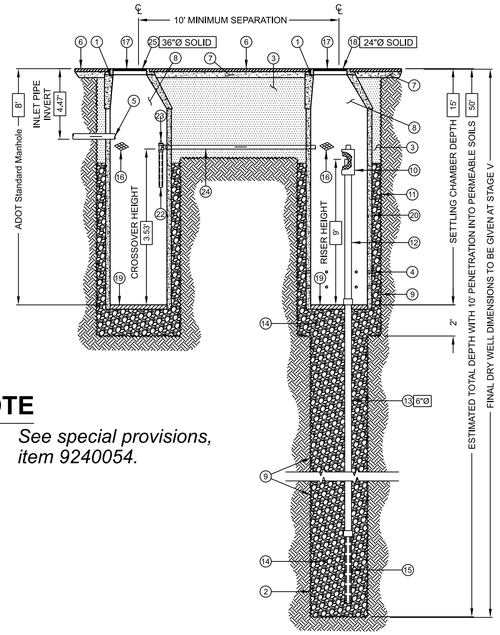

NOTE

1. *See special provisions, item 9240054.*

ITEM NUMBERS

1. **MANHOLE CONE** - MODIFIED FLAT BOTTOM.
2. **MIN. 4' Ø DRILLED SHAFT.**
3. **STABILIZED BACKFILL** - ONE SACK SLURRY MIX.
4. **6 PERFORATIONS MINIMUM PER ROW, 2 ROWS MINIMUM.**
5. **6" INLET PIPE AND DUCKBILL CHECK VALVE** (BY OTHERS). SEE SEPARATE PLAN FOR INVERT ELEVATIONS.
6. **GRADED BASIN OR PAVING** (BY OTHERS).
7. **COMPACTED BASE MATERIAL**, IF REQUIRED (BY OTHERS).
8. **FREEBOARD DEPTH VARIES** WITH INLET PIPE ELEVATION. INCREASE SETTLING CHAMBER DEPTH AS NEEDED TO MAINTAIN ALL INLET PIPE ELEVATIONS ABOVE RISER PIPE.
9. **NOT USED**
10. **DEBRIS SHIELD** - ROLLED 16 GA. STEEL X 24" LENGTH WITH VENTED ANTI-SIPHON AND INTERNAL 0.265" MAX. SWO FLATTENED EXPANDED STEEL SCREEN X 12" LENGTH. **FUSION BONDED EPOXY COATED**.
11. **MIN. 6' Ø DRILLED SHAFT.**
12. **RISER PIPE** - SCH. 40 PVC MATED TO DRAINAGE PIPE AT BASE SEAL.
13. **DRAINAGE PIPE** - ADS HIGHWAY GRADE OR SCH. 40 PVC WITH TRI-A COUPLER. SUSPEND PIPE DURING BACKFILL OPERATIONS. DIAMETER AS NOTED.
14. **ROCK** - WASHED, SIZED BETWEEN 3/8" AND 1-1/2".
15. **DRAINAGE SCREEN** - SCH. 40 PVC 0.120" SLOTTED WELL SCREEN WITH MIN. 32 SLOTS PER ROW/FT. OVERALL LENGTH VARIES, UP TO 120" WITH TRI-B COUPLER.
16. **ABSORBENT** - HYDROPHOBIC PETROCHEMICAL SPONGE. MIN. 128 OZ. CAPACITY.
17. **FABRIC SEAL** - U.V. RESISTANT GEOTEXTILE - **TO BE REMOVED BY CUSTOMER** AT PROJECT COMPLETION. GRATED ONLY.
18. **BOLTED RING & GRATE/COVER** - DIAMETER & TYPE AS SHOWN. CLEAN CAST IRON WITH WORDING "STORMWATER ONLY" IN RAISED LETTERS. BOLTED IN 2 LOCATIONS AND SECURED TO CONE WITH MORTAR. RIM ELEVATION ±0.02' OF PLANS.
19. **BASE SEAL** - GEOTEXTILE.
20. **PRE-CAST LINER** - 4000 PSI CONCRETE 48" ID. X 54" ID. CENTER IN HOLE AND ALIGN SECTIONS.
21. NOT USED.
22. **INTAKE SCREEN** - 4"Ø SCH. 40 PVC 0.120" MODIFIED SLOTTED WELL SCREEN WITH MIN. 32 SLOTS PER ROW/FT. 48" OVERALL LENGTH WITH TRI-C END CAP.
23. **VENTED ANTI-SIPHON INTAKE WITH FLOW REGULATOR.**
24. **CONNECTOR PIPE** - 4" Ø SCH. 40 PVC.
25. **Standard 36" ADOT Manhole Cover**

DETAIL 7: DRYWELL DETAIL

Scale: NTS

NO	DESCRIPTION OF REVISIONS	MADE BY	DATE
1	RENAMED STD DWG FROM C-18.00 TO C-18.00, SHEET 3 OF 3	RLF	9/04
2	MODIFIED SECTION VIEWS AND ADDED DETAIL A	RLF	5/12
3	NEW GENERAL NOTE 1; REVISED GENERAL NOTE NUMBERS	RLF	5/12
4	REVISED BEVEL SIZE	RLF	5/12

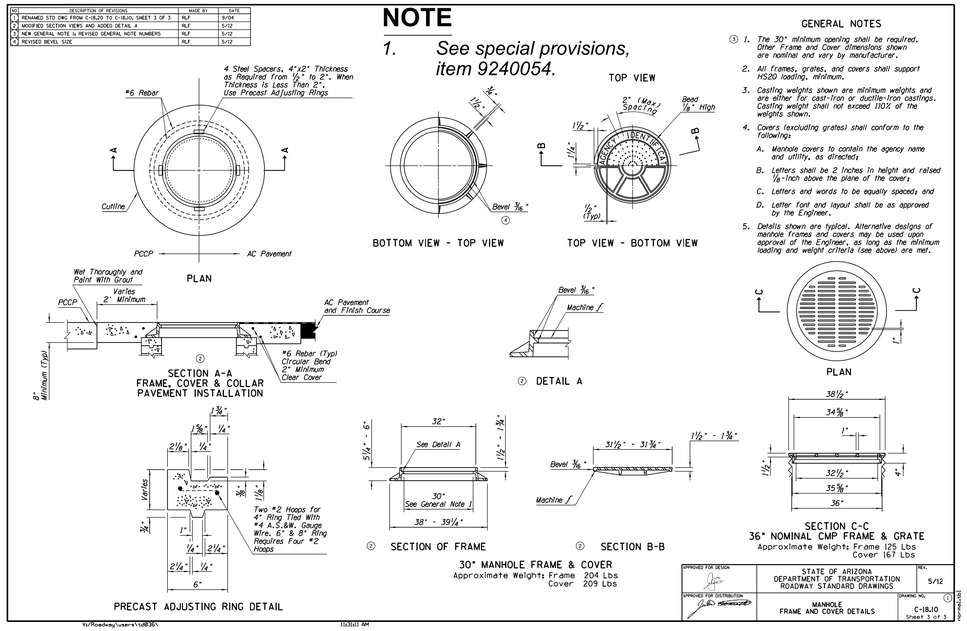

DETAIL 8: MANHOLE FRAME & COVER DETAILS

Scale: NTS

NO	DESCRIPTION OF REVISIONS	MADE BY	DATE
1	RENAMED STD DWG FROM C-18.00 TO C-18.00, SHEET 1 OF 3	RLF	9/04
2	REVISED GENERAL NOTE	RLF	7/05
3	DELETED ORIGINAL NOTE 5; CHANGED NUMBERS 6 & 7	RLF	5/07
4	ADDED NOTE TO DESIGNERS	RLF	5/07

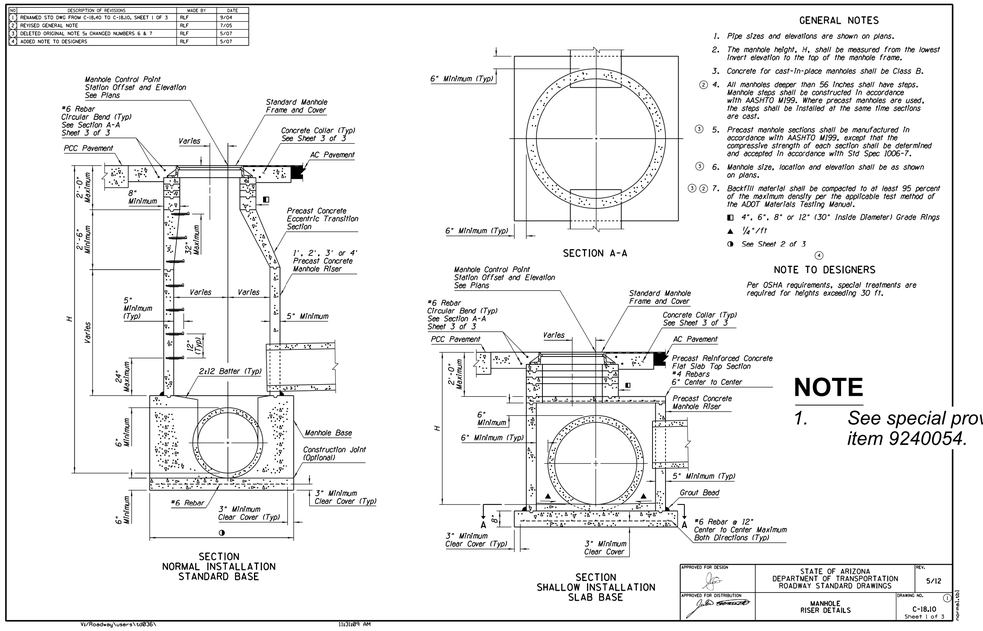

NOTE

1. *See special provisions, item 9240054.*

DETAIL 9: MANHOLE RISER DETAILS

Scale: NTS

NO	DESCRIPTION OF REVISIONS	MADE BY	DATE
1	RENAMED STD DWG FROM C-18.00 TO C-18.00, SHEET 2 OF 3	RLF	9/04
2	REVISED SECTION A-A THROUGH C-C GRAPHICS	RLF	4/06
3			
4			

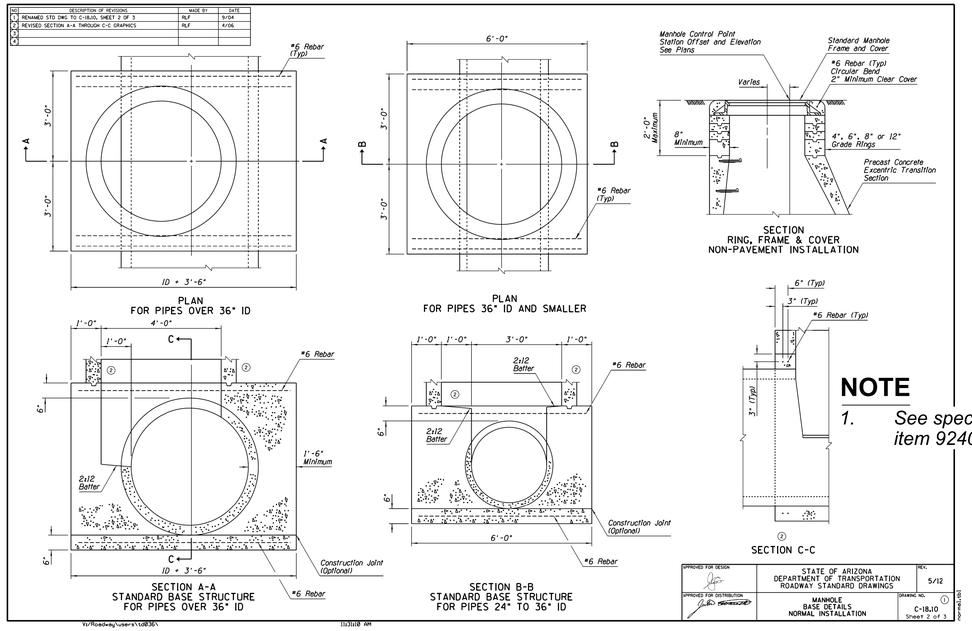

NOTE

1. *See special provisions, item 9240054.*

DETAIL 10: MANHOLE BASE DETAILS

Scale: NTS

	NAME	DATE
DESIGN	TWK	09/26
DRAWN	DML	09/26
CHECKED	TWK	09/26

Registered Professional Engineer (Chemical) CERTIFICATE NO. 82420 BRANDON PORTER Date Signed 09/27/26 ARIZONA, U.S.A.
Expires 12/31/27

Kimley»Horn
© 2026 KIMLEY-HORN AND ASSOCIATES, INC.

ARIZONA DEPARTMENT OF TRANSPORTATION
PROJECT DELIVERY AND OPERATIONS DIVISION
PROJECT MANAGEMENT GROUP

UTILITY DETAILS 2

ROUTE I-10
MILEPOST
STRUCTURE NO.

F.H.W.A. Arizona Division	STATE	PROJECT NO.	FEDERAL ID NO.	SHEET NO.	TOTAL SHEETS	RECORD DRAWING
	ARIZ.	010 CH 383	010-F(238)T	199	200	

LOCATION SAN SIMON PORT OF ENTRY (POE)
DWG NO. U-06.02
TRACS NO. F0728 01C
___ OF ___

10:45:02 AM 9/22/2026 DJ.Lewchanin K:\PHX_Roadway\Worksets\ADOT_PROJECTS_2022R3_10.12_291728040-F0728-SAN SIMON POE\dgn\Utilities\f0728_dtls02.dgn

NOTE

1. *See special provisions, item 9240112.*

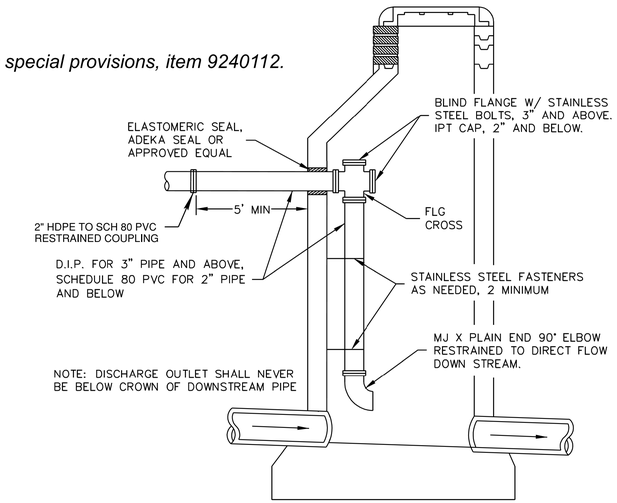

DETAIL NO.	City of Scottsdale Standard Details	APPROVED BY: Scottsdale Standards & Specifications Committee	FORCE MAIN DISCHARGE MANHOLE	DETAIL NO.
2402				2402

DETAIL 11: FORCE MAIN DISCHARGE MANHOLE DETAIL

Scale: NTS

Registered Professional Engineer (Civil) CERTIFICATE NO 82420 BRANDON PORTER Date Signed 09/26/26 ARIZONA, U.S.A.

Expires 12/31/27

	NAME	DATE
DESIGN	TWK	09/26
DRAWN	DML	09/26
CHECKED	TWK	09/26

Kimley»Horn

© 2026 KIMLEY-HORN AND ASSOCIATES, INC.

ARIZONA DEPARTMENT OF TRANSPORTATION
PROJECT DELIVERY AND OPERATIONS DIVISION
PROJECT MANAGEMENT GROUP

UTILITY DETAILS 3

ROUTE I-10
MILEPOST
STRUCTURE NO.

F.H.W.A. Arizona Division	STATE	PROJECT NO.	FEDERAL ID NO.	SHEET NO.	TOTAL SHEETS	RECORD DRAWING
	ARIZ.	010 CH 383	010-F(238)T	200	200	

LOCATION SAN SIMON PORT OF ENTRY (POE)

DWG NO. U-06.03

TRACS NO. F0728 01C

____ OF____

10:45:51 AM 9/22/2026 DJ.Lewchanin K:\PHX_Roadway\Worksets\ADOT_PROJECTS_2022R3_10.12_291728040-F0728-SAN SIMON POE\dgn\Utilities\f0728_dtls03.dgn