REV	REVISIONS	DRN	CKD	APP	DATE
A	NEW RELEASE	AJF	KLJ	NO	12-7-09
B	CORRECTED DIMENSION, DIM .241 WAS .190, RECOMMENDED HOLE SIZE WAS .067, ADDED PIN DETAIL AND OTHER BOTTOM VIEW	LD		NO	3-5-20

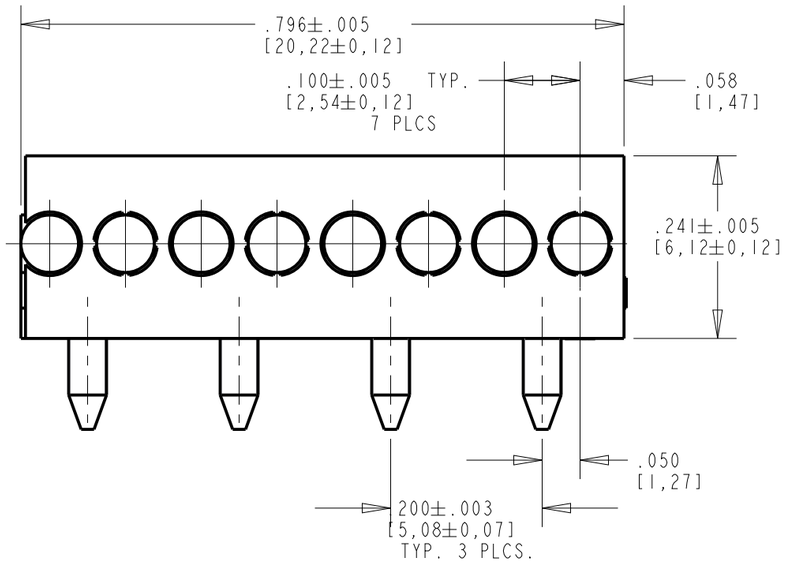

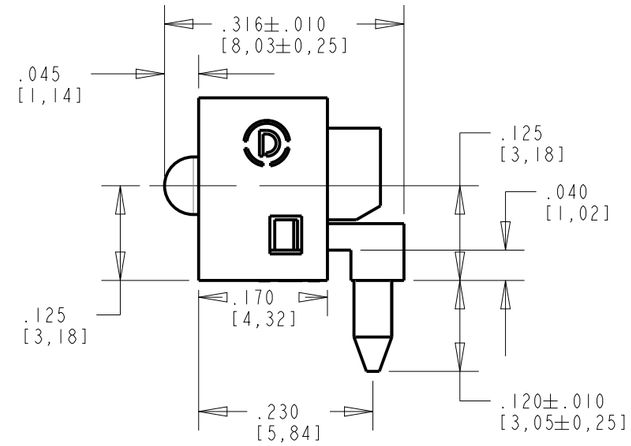

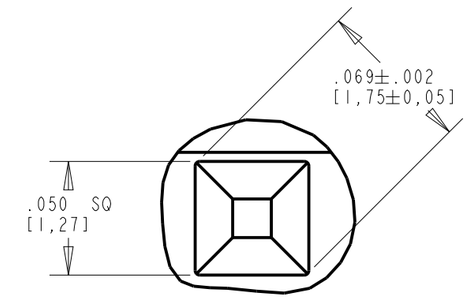

DETAIL A
SCALE 15.000

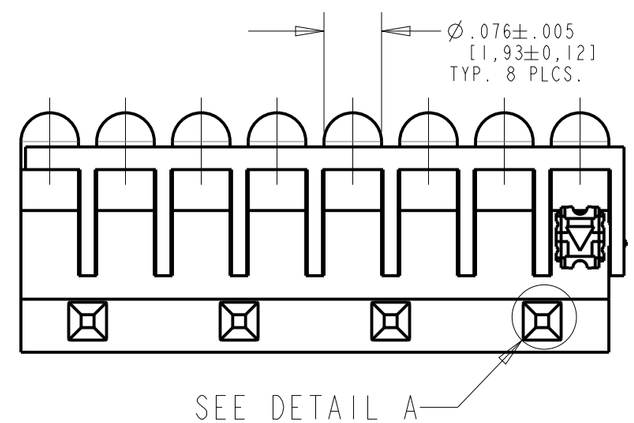

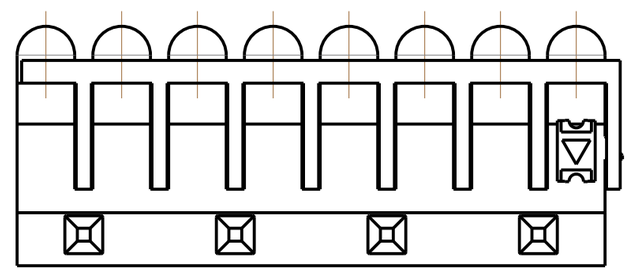

NOTES:

1. DIALIGHT PART NUMBER: 515-1086F.
2. COMPONENTS DESIGNED TO BE PRESSED INTO PC BOARD.
3. ASSEMBLY TO CONSIST OF 8-ELEMENT LIGHT PIPE AND SHIELD.
4. LIGHT PIPE MATERIAL TO BE CLEAR, TRANSMISSIVEPOLYCARBONATE (UL 94V-0 FLAMMABILITY).
   SHIELD MATERIAL TO BE BLACK POLYBUTYLENE TEREPHTHALATE (PBT) (UL 94V-0 FLAMMABILITY).
5. RECOMMENDED LED SURFACE MOUNT 0805 SINGLE COLOR PACKAGE. DIALIGHT PART NUMBER: 598-81XX-107F.
6. RECOMMENDED LED SURFACE MOUNT 0606 BI-COLOR PACKAGE. DIALIGHT PART NUMBER: 598-84XX-207F.

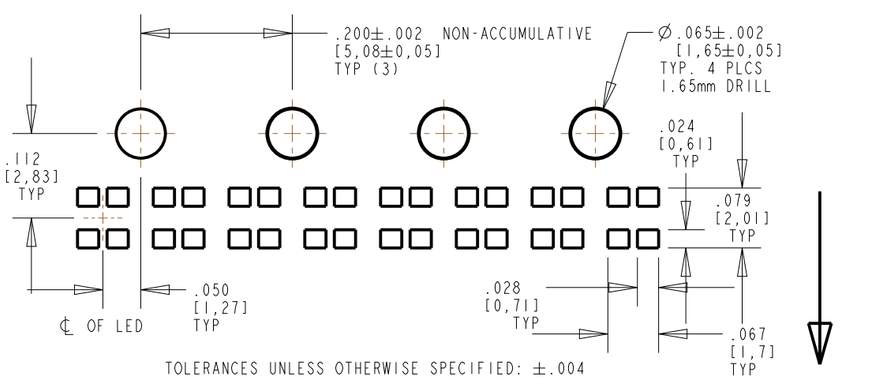

TOLERANCES UNLESS OTHERWISE SPECIFIED: ±.004

SOLDERPAD/HOLES LAYOUT BI-COLOR LED

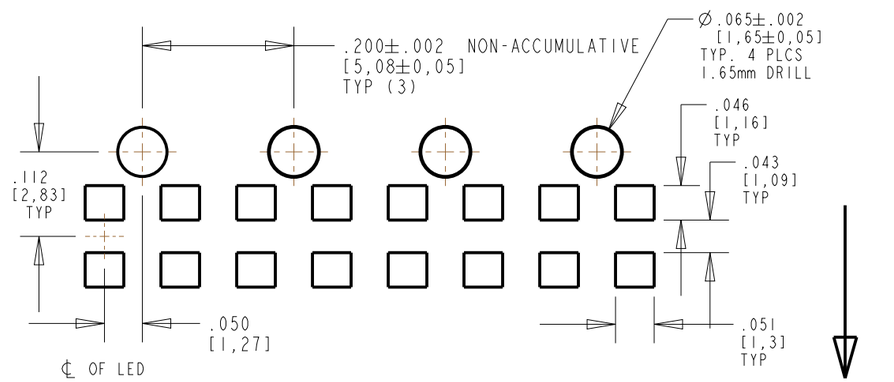

TOLERANCES UNLESS OTHERWISE SPECIFIED: ±.004

SOLDERPAD/HOLES LAYOUT SINGLE COLOR LED

THIS DRAWING AND THE CONTENTS HEREIN ARE CONFIDENTIAL AND THE SOLE PROPERTY OF DIALIGHT CORP. REPRODUCTION OF THIS DRAWING OR CONSTRUCTION OF ANY PARTS WITHIN THIS DRAWING ARE FORBIDDEN WITHOUT THE WRITTEN CONSENT OF DIALIGHT CORP.

SCALE: 5.000
ALL DIM's: INCH (mm)
TOLERANCES: UNLESS OTHERWISE SPECIFIED
FRACTIONS: ±1/64
DECIMALS (.XX): ±.02
DECIMALS (.XXX): ±.015
ANGLES: ±1°
FINISH N/A
FSCM 83330

DRAWING NUMBER C-17022
REV B
TITLE ASSY. 8-ELEMENT LIGHT PIPE / SHIELD
MATERIAL -

Dialight
1501 ROUTE 34 SOUTH
FARMINGDALE, NJ 07727
(732) 919-3119
www.dialight.com

SHEET 1 OF 1
FAMILY TABLE: