REV	ECN NO	REVISIONS	DRN	CKD	APP	QA	CM	DATE
A	92803	NEW RELEASE	LD		NO			5-18-22

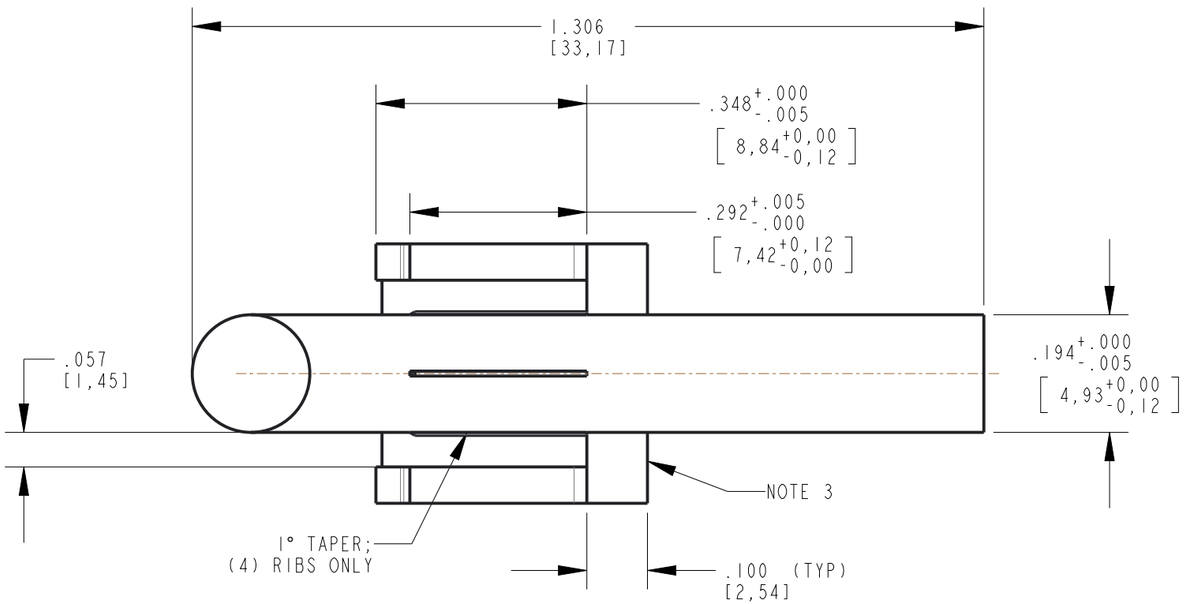

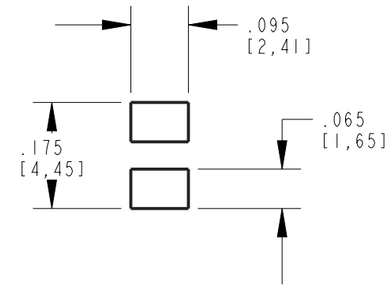

RECOMMENDED SOLDER PAD LAYOUT

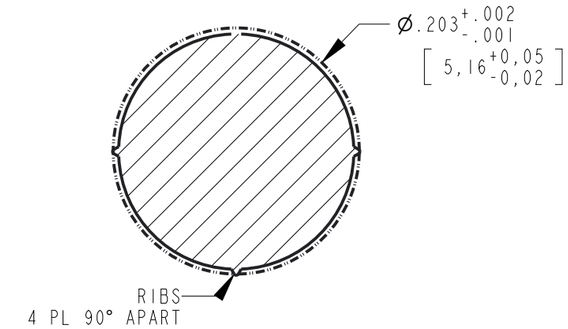

SECTION A-A
SCALE 8.000

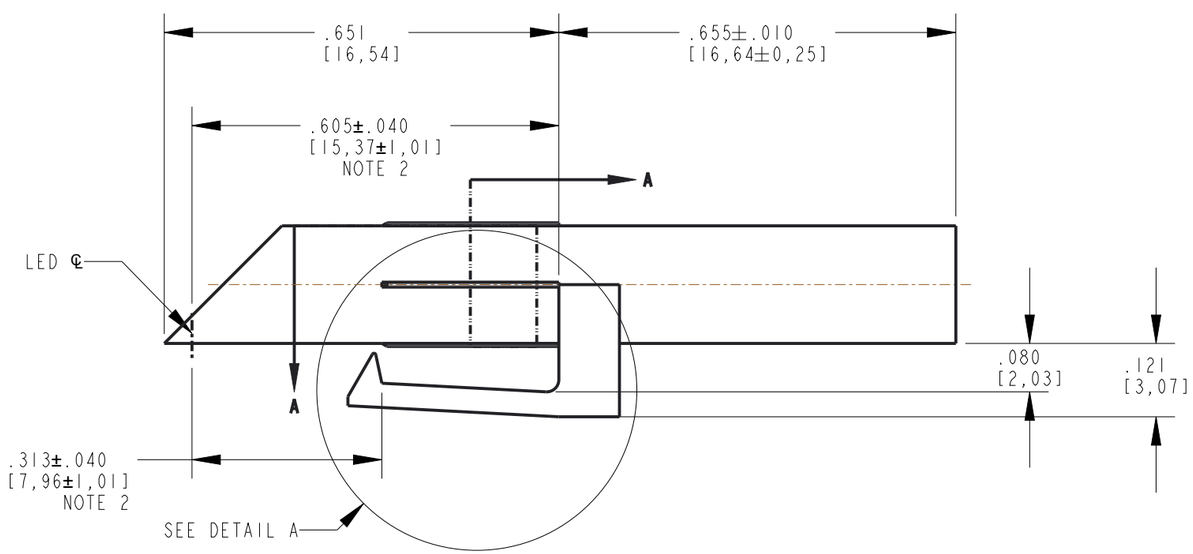

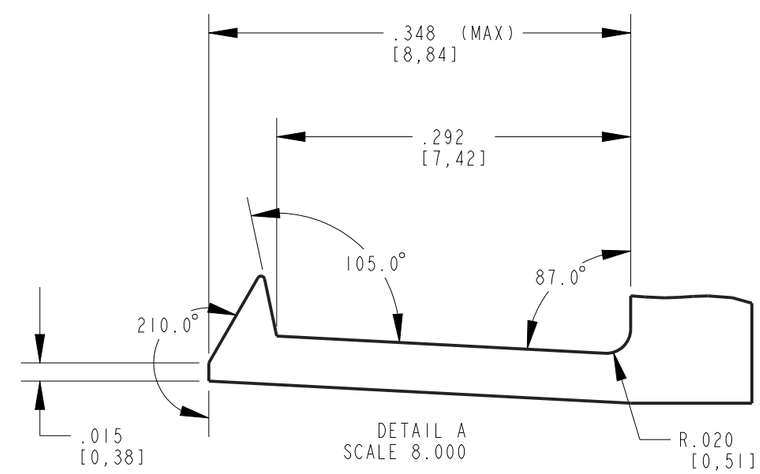

DETAIL A
SCALE 8.000

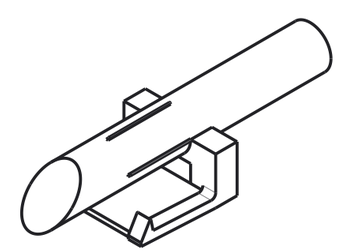

SCALE 2.000

NOTES:
1. DIALIGHT PART NO: 515-1012F
2. COMPONENT TO BE MOLDED IN A WATER CLEAR TRANSIMISSIVE POLYCARBONATE MEETING UL 94-V0.
3. RECOMMENDED PLACEMENT OF LED.
4. "↑" SYMBOL ALONG THIS SURFACE (NORMAL TO VIEW SHOWN) TO INDICATE LIGHTPIPE ORIENTATION.

THIS DRAWING AND THE CONTENTS HEREIN ARE CONFIDENTIAL AND THE SOLE PROPERTY OF DIALIGHT CORP. REPRODUCTION OF THIS DRAWING OR CONSTRUCTION OF ANY PARTS WITHIN THIS DRAWING ARE FORBIDDEN WITHOUT THE WRITTEN CONSENT OF DIALIGHT CORP.

DIALIGHT CORP INTERNAL REFERENCE ONLY = 3D MODEL : 5151012F-A.4

SCALE: 4.000

ALL DIM's: INCH (mm)

TOLERANCES:
UNLESS OTHERWISE SPECIFIED
FRACTIONS: ±1/64
DECIMALS (.XX): ±.01
DECIMALS (.XXX): ±.005
DECIMALS (.XXXX): ±.0005
ANGLES: ±1°

FINISH
-

FSCM 83330

DRAWING NUMBER: C-18566

REV: A

TITLE: LIGHTPIPE

MATERIAL: SEE BOM

Dialight
1501 ROUTE 34 SOUTH
FARMINGDALE, NJ 07727
(732) 919-3119
www.dialight.com

SHEET 1 OF 1

FAMILY TABLE: