NOTES:

1. MATERIALS AND FINISHES:
   BODY - BRASS, WHITE BRONZE PLATING
   CONTACT - BRASS, SILVER PLATING
   INSULATOR - PTFE, NATURAL
   REAR INSULATOR - ULTEM, NATURAL
   CAP - BRASS, WHITE BRONZE PLATING
   O-RING - SILICONE RUBBER, RED

2. ELECTRICAL:
   A. IMPEDANCE: 50 OHM
   B. FREQUENCY RANGE: DC - 20 GHz
   C. VSWR(RETURN LOSS): 28 dB @ DC-4 GHz
      25 dB @ 4 -6 GHz
   D. DIELECTRIC WITHSTANDING VOLTAGE: 1000 VRMS, MIN.
   F. INTERMODULATION 3rd ORDER: -166 dBc @2X20W

3. MECHANICAL:
   A. DURABILITY: 100 CYCLES MIN.
   B. TEMPERATURE RANGE: -65° C TO +165° C

4 SHOWS CABLE ENTRY DIMENSIONS

5. PACKAGING:
   A. QUANTITY: SINGLE PACK
   B. MARKING: PACKAGING TO BE MARKED
      "AMPHENOL RF 225-107P-52A WWYY"

THIRD ANGLE PROJ.

REVISIONS				
REV	DESCRIPTION	DATE	ECN	APPR
A	RELEASE TO MANUFACTURING	27-Jun-19	12024	CJV

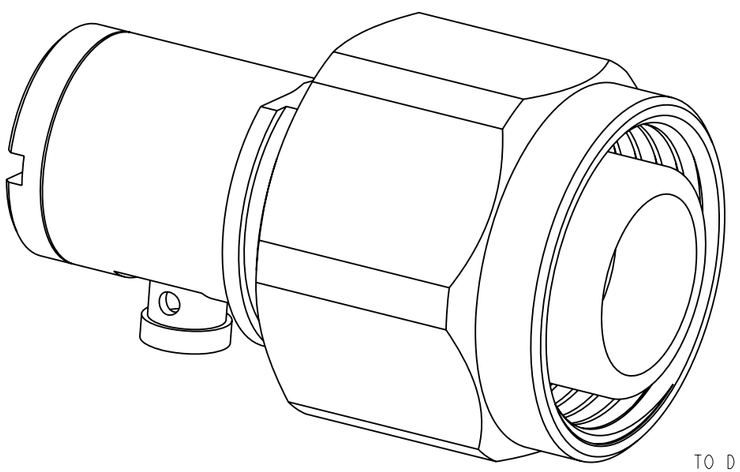

SCALE 4.000

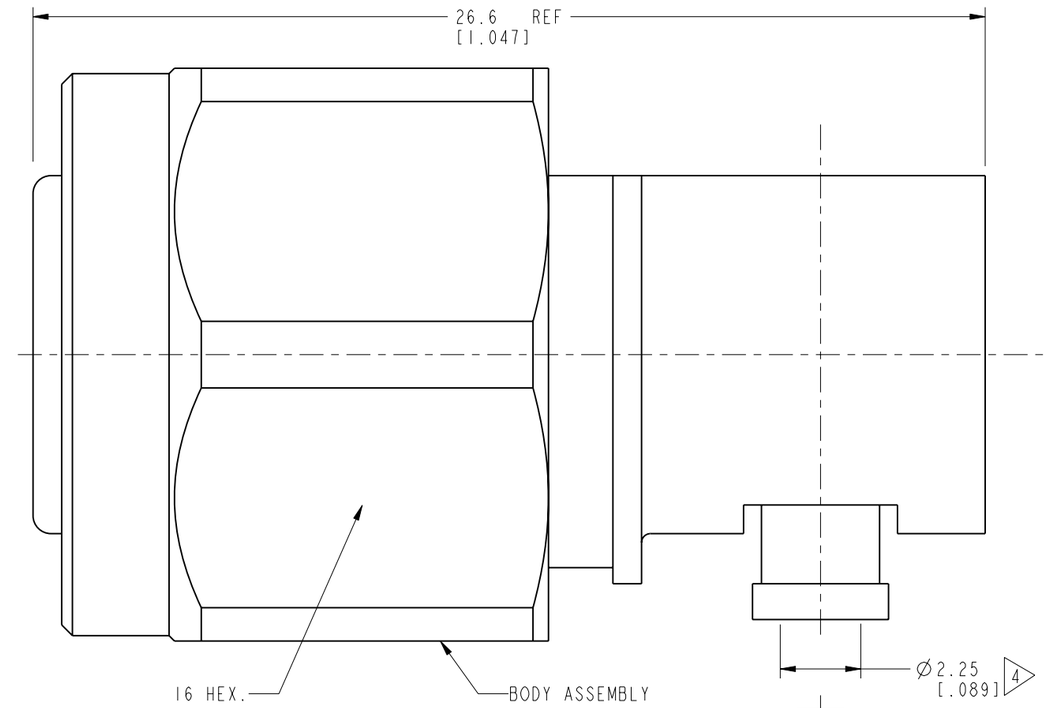

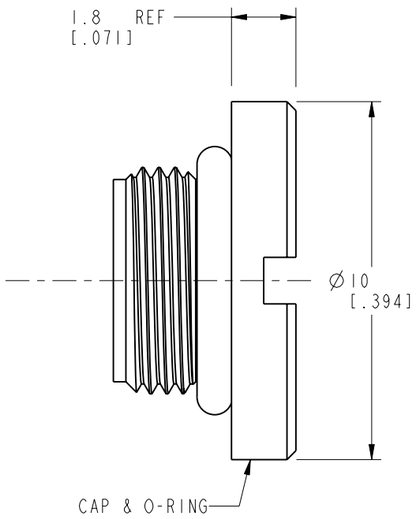

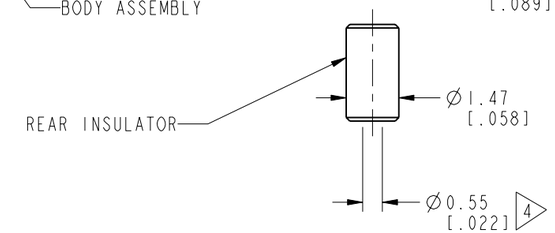

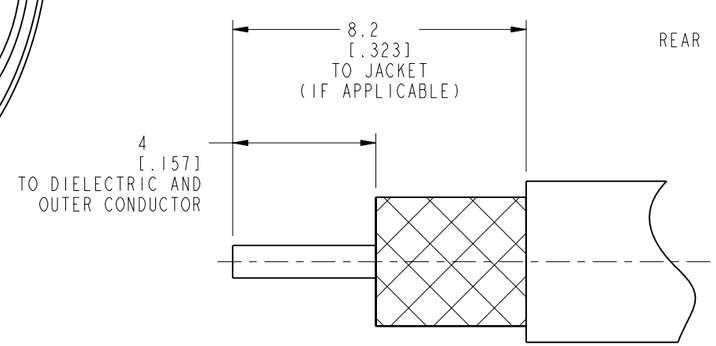

RECOMMENDED CABLE
STRIPPING DIMENSIONS

CUSTOMER OUTLINE DRAWING

ALL OTHER SHEETS ARE FOR INTERNAL USE ONLY

UNLESS OTHERWISE SPECIFIED, DIMENSIONS ARE IN METRIC AND TOLERANCES ARE:

<0.5mm	0.5 - 6mm	6 - 30mm	30 - 120mm	ANGLES
± 0.05mm	±0.1mm	±0.2mm	± 0.3mm	±1°

NOTICE - These drawings, specifications, or other data (1) are, and remain the property of Amphenol corp. (2) must be returned upon request; and (3) are confidential and not to be disclosed to any person other than those to whom they are given by Amphenol Corp. the furnishing of these drawings, specifications, or other data by Amphenol Corp., or to any other person to anyone for any purpose is not to be regarded by implication or otherwise in any manner licensing, granting rights to permitting such holder or any other person to manufacture, use or sell any product, process or design, patented or otherwise, that may in any way be related to or disclosed by said drawings, specifications, or other data.

MATERIAL	DRAWN	DATE
SEE NOTES	J.LUO	27-Jun-19
REFERENCE	ENGINEER	DATE
EAR# 8104	S.DUAN	12-Jul-19
REF: ---	APPROVED	DATE
CONFIGURATION LEVEL: In Work	S.HSIEH	12-Jul-19
FINISH	CAD FILE	

TITLE
2.2-5 RA PLUG FOR
0.086" SEMI-RIGID
& CONFORMABLE

SCALE: 6.0:1.0 | SHEET 2 OF 2

DWG SIZE: B | REV: A

Amphenol RF
www.amphenolrf.com

DRAWING NO. 225-107P-52A
ITEM NO. 225-107P-52A
PART NO. 225-107P-52A