Boiler must be grounded in accordance with ANSI National Electric Code.

Ground Screw Terminal — To Grounding Conductor

IMPORTANT: The wiring shown for devices supplied and installed by others is suggested only. Certification of, and responsibility for the correctness of the wiring is the responsibility of the supplier of these devices. Manufacturer accepts no responsibility for the correctness or safety or execution of this wiring or of the operation of such devices.

Model	1000-1250			1500-2500			3000	
V/F/P	120/60/1	208/60/1	230/60/1	120/60/1	208/60/1	230/60/1	208/60/1	230/60/1
A	N/A	Follow diagram on the transformer		N/A	Follow diagram on the transformer		Follow diagram on the transformer	
B	N/A			N/A				
C	N/A	3 amp	3 amp	N/A	3 amp	3 amp	3 amp	3 amp
D	N/A	7 amp	7 amp	N/A	9 amp	9 amp	12 amp	12 amp

NOTE: A and B are transformer wiring. C and D are fuses.

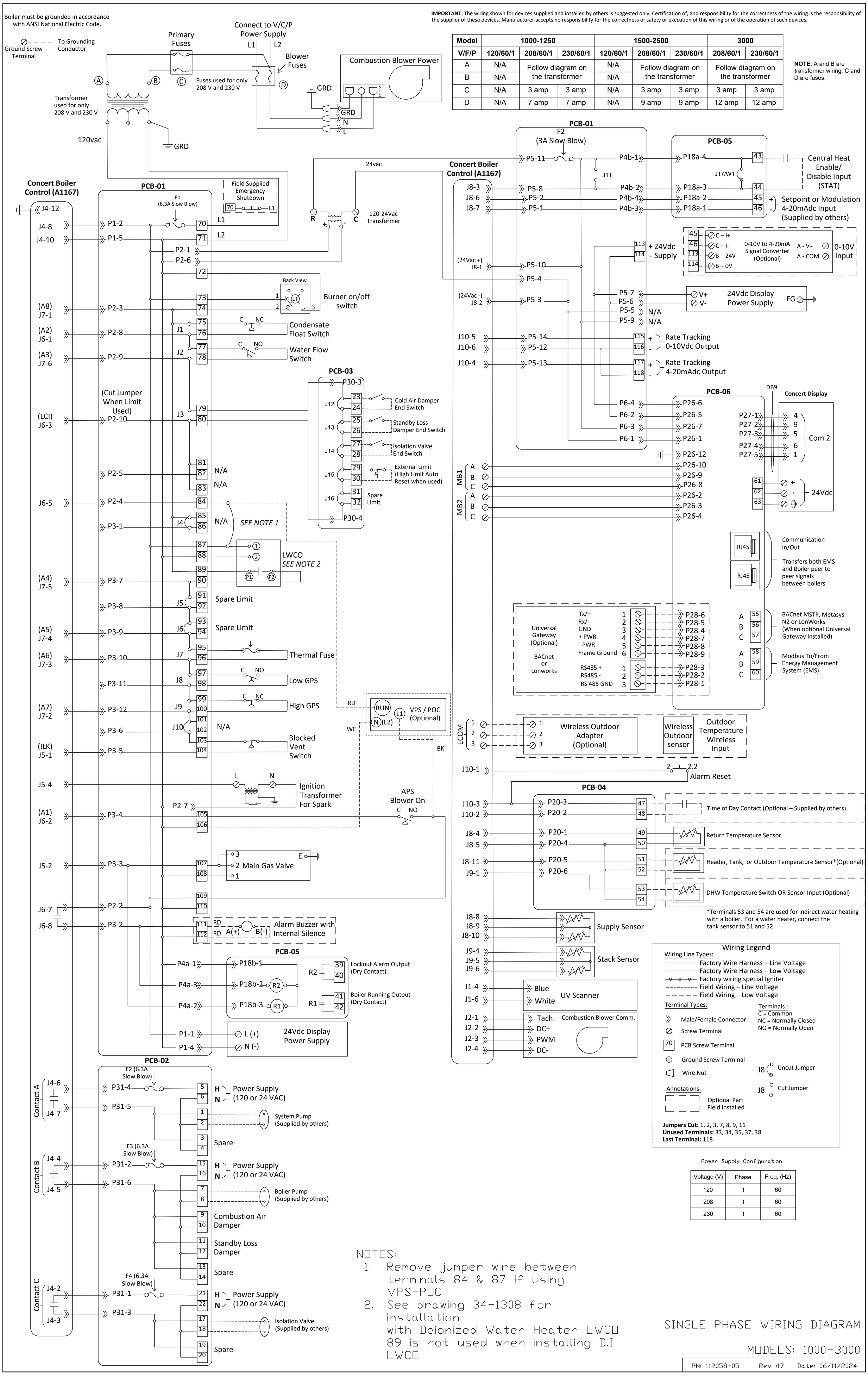

Power Supply Configuration

Voltage (V)	Phase	Freq. (Hz)
120	1	60
208	1	60
230	1	60

NOTES:

1. Remove jumper wire between terminals 84 & 87 if using VPS-POC
2. See drawing 34-1308 for installation with Deionized Water Heater LWCO 89 is not used when installing D.I. LWCO

SINGLE PHASE WIRING DIAGRAM

MODELS: 1000-3000

PN: 112058-05 Rev :17 Date: 06/11/2024