INSTALLATION INSTRUCTIONS
FOR

K2™
CONDENSING HIGH EFFICIENCY
DIRECT VENT
GAS - FIRED HOT WATER BOILER

Intertek
9700609

ENERGY STAR

AHRI CERTIFIED®
www.ahridirectory.org

As an ENERGY STAR® Partner, U.S. Boiler Company has determined that the K2™ Series meets the ENERGY STAR® guidelines for energy efficiency established by the United States Environmental Protection Agency (EPA).

WARNING: Improper installation, adjustment, alteration, service or maintenance can cause property damage, injury, or loss of life. For assistance or additional information, consult a qualified installer, service agency or the gas supplier. This boiler requires a special venting system. Read these instructions carefully before installing.

105294-05 - 5/15

Price - $5.00

IMPORTANT INFORMATION - READ CAREFULLY

NOTE: The equipment shall be installed in accordance with those installation regulations enforced in the area where the installation is to be made. These regulations shall be carefully followed in all cases. Authorities having jurisdiction shall be consulted before installations are made.

All wiring on boilers installed in the USA shall be made in accordance with the National Electrical Code and/or local regulations.

All wiring on boilers installed in Canada shall be made in accordance with the Canadian Electrical Code and/or local regulations.

The City of New York requires a Licensed Master Plumber supervise the installation of this product.

The Massachusetts Board of Plumbers and Gas Fitters has approved the K2™ Series boiler. See the Massachusetts Board of Plumbers and Gas Fitters website, http://license.reg.state.ma.us/pubLic/pl_products/pb_pre_form.asp for the latest Approval Code or ask your local Sales Representative.

The Commonwealth of Massachusetts requires this product to be installed by a Licensed Plumber or Gas Fitter.

The following terms are used throughout this manual to bring attention to the presence of hazards of various risk levels, or to important information concerning product life.

DANGER

Indicates an imminently hazardous situation which, if not avoided, will result in death, serious injury or substantial property damage.

CAUTION

Indicates a potentially hazardous situation which, if not avoided, may result in moderate or minor injury or property damage.

WARNING

Indicates a potentially hazardous situation which, if not avoided, could result in death, serious injury or substantial property damage.

NOTICE

Indicates special instructions on installation, operation, or maintenance which are important but not related to personal injury hazards.

DANGER

Explosion Hazard. DO NOT store or use gasoline or other flammable vapors or liquids in the vicinity of this or any other appliance.

If you smell gas vapors, NO NOT try to operate any appliance - DO NOT touch any electrical switch or use any phone in the building. Immediately, call the gas supplier from a remotely located phone. Follow the gas supplier's instructions or if the supplier is unavailable, contact the fire department.

WARNING

Asphyxiation Hazard. This boiler requires regular maintenance and service to operate safely. Follow the instructions contained in this manual.

Improper installation, adjustment, alteration, service or maintenance can cause property damage, personal injury or loss of life. Read and understand the entire manual before attempting installation, start-up operation, or service. Installation and service must be performed only by an experienced, skilled, and knowledgeable installer or service agency.

This boiler must be properly vented.

This boiler needs fresh air for safe operation and must be installed so there are provisions for adequate combustion and ventilation air.

Asphyxiation Hazard. The interior of the venting system must be inspected and cleaned before the start of the heating season and should be inspected periodically throughout the heating season for any obstructions. A clean and unobstructed venting system is necessary to allow noxious fumes that could cause injury or loss of life to vent safely and will contribute toward maintaining the boiler's efficiency.

Installation is not complete unless a safety relief valve is installed into the tapping located on left side of appliance or the supply piping. - See the Water Piping and Trim Section of this manual for details.

This boiler is supplied with safety devices which may cause the boiler to shut down and not re-start without service. If damage due to frozen pipes is a possibility, the heating system should not be left unattended in cold weather; or appropriate safeguards and alarms should be installed on the heating system to prevent damage if the boiler is inoperative.

Burn Hazard. This boiler contains very hot water under high pressure. Do not unscrew any pipe fittings nor attempt to disconnect any components of this boiler without positively assuring the water is cool and has no pressure. Always wear protective clothing and equipment when installing, starting up or servicing this boiler to prevent scald injuries. Do not rely on the pressure and temperature gauges to determine the temperature and pressure of the boiler. This boiler contains components which become very hot when the boiler is operating. Do not touch any components unless they are cool.

Respiratory Hazard. Boiler materials of construction, products of combustion and the fuel contain alumina, silica, heavy metals, carbon monoxide, nitrogen oxides, aldehydes and/or other toxic or harmful substances which can cause death or serious injury and which are known to the state of California to cause cancer, birth defects and other reproductive harm. Always use proper safety clothing, respirators and equipment when servicing or working nearby the appliance.

Failure to follow all instructions in the proper order can cause personal injury or death. Read all instructions, including all those contained in component manufacturers manuals which are provided with the boiler before installing, starting up, operating, maintaining or servicing.

All cover plates, enclosures and guards must be in place at all times.

Special Installation Requirements for Massachusetts

A. For all sidewall horizontally vented gas fueled equipment installed in every dwelling, building or structure used in whole or in part for residential purposes and where the sidewall exhaust vent termination is less than seven (7) ft. above grade, the following requirements shall be satisfied:

1. If there is no carbon monoxide detector with an alarm already installed in compliance with the most current edition of NFPA 720, NFPA 70 and the Massachusetts State Building Code in the residential unit served by the sidewall horizontally vented gas fueled equipment, a battery operated carbon monoxide detector with an alarm shall be installed in compliance with the most current edition of NFPA 720, NFPA 70 and the Massachusetts State Building Code.
2. In addition to the above requirements, if there is not one already present, a carbon monoxide detector with an alarm and a battery back-up shall be installed and located in accordance with the installation requirements supplied with the detector on the floor level where the gas equipment is installed. The carbon monoxide detector with an alarm shall comply with 527 CMR, ANSI/UL 2034 Standards or CSA 6.19 and the most current edition of NFPA 720. In the event that the requirements of this subdivision can not be met at the time of the completion of the installation of the equipment, the installer shall have a period of thirty (30) days to comply with this requirement; provided, however, that during said thirty (30) day period, a battery operated carbon monoxide detector with an alarm shall be installed in compliance with the most current edition of NFPA 720, NFPA 70 and the Massachusetts State Building Code. In the event that the sidewall horizontally vented gas fueled equipment is installed in a crawl space or an attic, the carbon monoxide detector may be installed on the next adjacent habitable floor level. Such detector may be a battery operated carbon monoxide detector with an alarm and shall be installed in compliance with the most current edition of NFPA 720, NFPA 70 and the Massachusetts State Building Code.
3. A metal or plastic identification plate shall be permanently mounted to the exterior of the building at a minimum height of eight (8) ft. above grade directly in line with the exhaust vent terminal for the horizontally vented gas fueled heating appliance or equipment. The sign shall read, in print size no less than one-half (1/2) inch in size, **"GAS VENT DIRECTLY BELOW. KEEP CLEAR OF ALL OBSTRUCTIONS"**.
4. A final inspection by the state or local gas inspector of the sidewall horizontally vented equipment shall not be performed until proof is provided that the state or local electrical inspector having jurisdiction has granted a permit for installation of carbon monoxide detectors and alarms as required above.

B. EXEMPTIONS: The following equipment is exempt from 248 CMR 5.08(2)(a) 1 through 4:

1. The equipment listed in Chapter 10 entitled "Equipment Not Required To Be Vented" in the most current edition of NFPA 54 as adopted by the Board; and
2. Product Approved sidewall horizontally vented gas fueled equipment installed in a room or structure separate from the dwelling, building or structure used in whole or in part for residential purposes.

C. When the manufacturer of Product Approved sidewall horizontally vented gas equipment provides a venting system design or venting system components with the equipment, the instructions for installation of the equipment and the venting system shall include:

1. A complete parts list for the venting system design or venting system; and
2. Detailed instructions for the installation of the venting system design or the venting system components.

D. When the manufacturer of a Product Approved sidewall horizontally vented gas fueled equipment does not provide the parts for venting flue gases, but identifies "special venting systems", the following shall be satisfied:

1. The referenced "special venting system" instructions shall be included with the appliance or equipment installation instructions; and
2. The "special venting systems" shall be Product Approved by the Board, and the instructions for that system shall include a parts list and detailed installation instructions.

E. A copy of all installation instructions for all Product Approved sidewall horizontally vented gas fueled equipment, all venting instructions, all parts lists for venting instructions, and/or all venting design instructions shall remain with the appliance or equipment at the completion of the installation.

WARNINGS FOR THE HOMEOWNER

FOLLOW ALL INSTRUCTIONS and warnings printed in this manual and posted on the boiler.

MAINTAIN THE BOILER. To keep your boiler safe and efficient, have a service technician maintain this boiler as specified in Service and Maintenance manual.

IF YOU ARE NOT QUALIFIED to install or service boilers, do not install or service this one.

THE BOILER MAY LEAK WATER at the end of its useful life. Be sure to protect walls, carpets, and valuables from water that could leak from the boiler.

PROTECT YOUR HOME IN FREEZING WEATHER. A power outage, safety lockout, or component failure will prevent your boiler from lighting. In winter, your pipes may freeze and cause extensive property damage. Do not leave the heating system unattended during cold weather unless alarms or other safeguards are in place to prevent such damage

DO NOT BLOCK AIR FLOW into or around the boiler. Insufficient air may cause the boiler to produce carbon monoxide or start a fire.

KEEP FLAMMABLE LIQUIDS AWAY from the boiler, including paint, solvents, and gasoline. The boiler may ignite the vapors from the liquids causing explosion or fire.

KEEP CHILDREN AND PETS away from hot surfaces of the boiler, boiler piping, vent piping and vent terminals.

CARBON MONOXIDE (CO) is an odorless, deadly gas that may be introduced into your home by any malfunctioning fuel-burning product or vent system failure. Consider installing CO alarms near bedrooms in all levels of the building to warn you and your family of potential CO exposure.

Table of Contents

I. Product Description 7
II. Specifications 7
III. Before Installing 8
IV. Locating The Boiler 9
V. Mounting The Boiler 11
VI. Air For Ventilation 14
VII. Venting 15
A. Vent System Design 15
B. Design Requirements Unique to Horizontal Twin Pipe Venting Systems 21
C. Design Requirements Unique to Vertical Venting Systems 27
D. Design Requirements Unique to Split Vent Systems 35
E. Assembly of CPVC/PVC Vent Systems 43
F. Assembly of DuraVent PolyPro Vent Systems 50
G. Assembly of Selkirk Polyflue Vent Systems 55
H. Assembly of Centrotherm InnoFlue Vent Systems 59
I. Condensate Trap and Drain 63
J. Removing An Existing Boiler From Common Chimney 64
VIII. Gas Piping 65
IX. System Piping 67
A. General System Piping Precaution 67
B. Near Boiler Piping Design 68
C. Standard Piping Installation Requirements 76
D. Piping For Special Situations 78
X. Wiring 79
XI. Start-Up and Checkout 89
Appendix A: LP Gas Conversion Instructions 96
Appendix B: Instructions for High Altitude Installations Above 2000 ft. 99
Appendix C: Special Requirements For Side-Wall Vented Appliances In The Commonwealth of Massachusetts 102

I. Product Description

This boiler is a stainless steel gas fired condensing boiler designed for use in forced hot water heating systems requiring supply water temperatures of 180°F or less. It is designed for installation on a wall. This boiler may be vented vertically or horizontally with combustion air supplied from outdoors. It is not designed for use in gravity hot water systems or systems containing significant amounts of dissolved oxygen.

II. Specifications

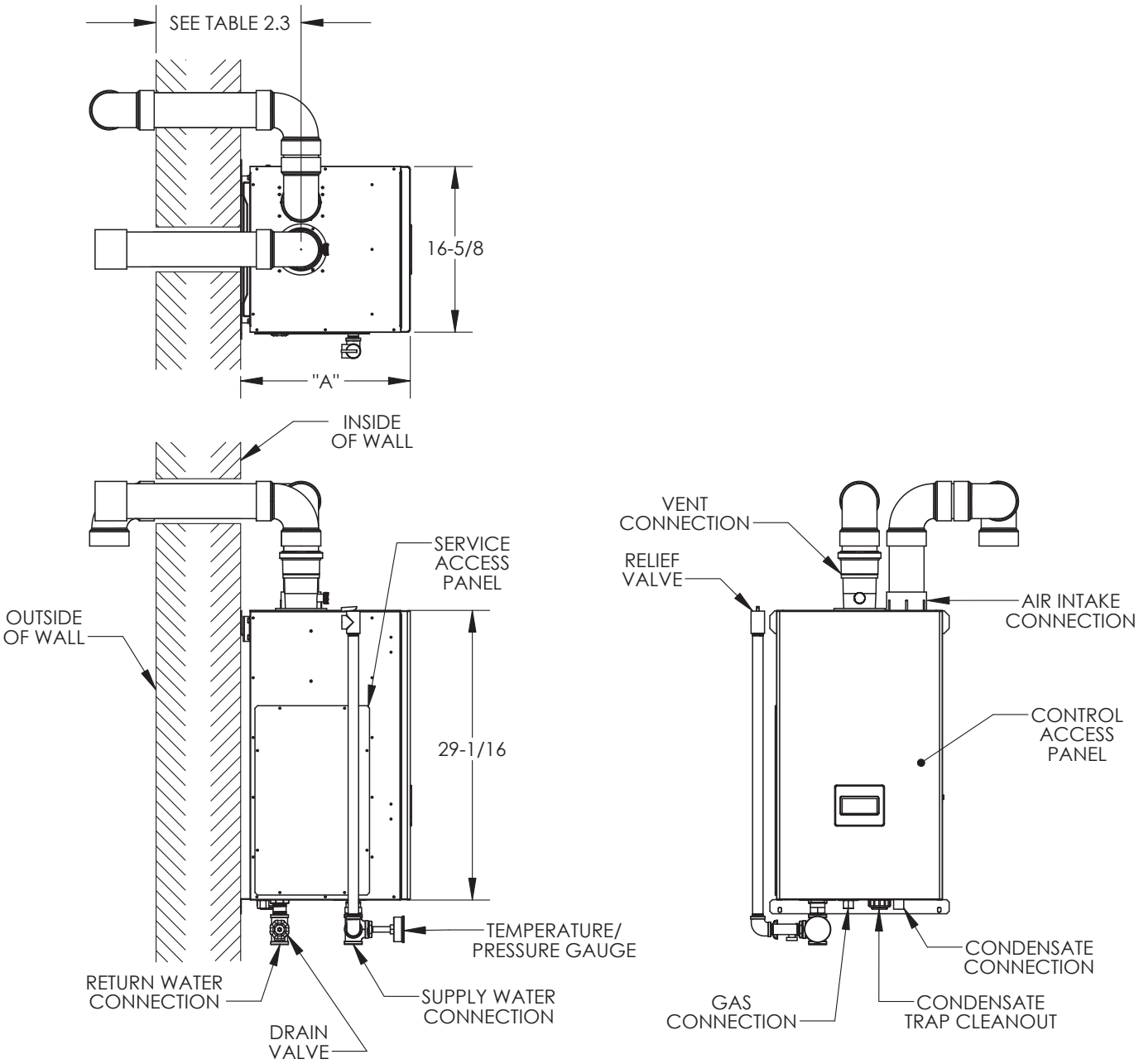

Figure 2.1: General Configuration

Table 2.2: Specifications

Model*	Maximum Input (MBH)	Minimum Input (MBH)	D.O.E. Heating Capacity (MBH)	AHRI Net Rating * (MBH)	Water Volume (gal.)	Dim. "A"	Supply & Return Connection Size (NPT)	Gas Connection Size (NPT)	Approx. Net Weight (lb.)
K2-080	80	16	74	64	0.36	17"	1"	1/2"	100
K2-100	100	20	92	80	0.44	17"	1"	1/2"	102
K2-120	120	24	111	97	0.53	17"	1"	1/2"	105
K2-150	150	30	141	123	0.79	21"	1"	1/2"	119
K2-180	180	36	167	145	0.79	21"	1"	1/2"	119

* The Net AHRI Water Ratings shown are based on a piping and pickup allowance of 1.15. The manufacturer should be consulted before selecting a boiler for installations having unusual piping and pickup requirements, such as intermittent system operation, extensive piping systems, etc.

Table 2.3: Vent Lengths

Model	Nominal Vent/Intake Size (in)	Min Vent Length (in)	Max Vent Length	Approx. Derate at Max Vent (%)
K2-080	2	12	60 ft	9
K2-080	3	12	135 ft	2
K2-100	2	12	60 ft	15
K2-100	3	12	135 ft	3
K2-120	3	12	135 ft	7
K2-150	3	52	135 ft	7
K2-180	3	52	135 ft	9

See Section VII (Venting) for additional requirements and details.

III. Before Installing

1. Safe, reliable operation of this boiler depends upon installation by a professional heating contractor in strict accordance with this manual and the requirements of the authority having jurisdiction.
   - In the absence of an authority having jurisdiction, installation must be in accordance with this manual and the National Fuel Gas Code, ANSI Z223.1. In Canada, installation must be in accordance with the B149.1 Installation Code.
   - Where required by the authority having jurisdiction, this installation must conform to the *Standard for Controls and Safety Devices for Automatically Fired Boilers* (ANSI/ASME CSD-1).
2. Read Section VII to verify that the maximum combustion air and exhaust pipe lengths will not be exceeded in the planned installation. Also verify that the vent terminal can be located in accordance with Section VII.
3. Make sure that the boiler is correctly sized:
   - For heating systems employing convection radiation (baseboard or radiators), use an industry accepted sizing method such as the *I=B=R* Guide RHH published by the Air-Conditioning, Heating and Refrigeration Institute (AHRI).
   - For new radiant heating systems, refer to the radiant tubing manufacturer's boiler sizing guidelines.
   - For system which includes an indirect water heater, make sure the boiler has the output called for by the indirect water heater manufacturer's instructions.

4. All boilers are shipped from the factory configured for use with natural gas. They may be converted for use with LP gas ("propane") using a combustion analyzer in accordance with the instructions in Appendix A.

DANGER

- **Do not attempt to operate this boiler on LP gas without converting it in accordance with the instructions shown in Appendix A.**
- **Do not attempt to convert this boiler to LP gas without the use of a combustion analyzer.**
- **Failure to follow the conversion instructions in Appendix A will result in operation of the boiler at unsafe Carbon Monoxide (CO) levels and may result in personal injury or loss of life. Improper conversion may also result in unreliable operation, resulting in property damage.**
- **Before attempting to operate this boiler at altitudes above 2000 ft., follow instructions shown in Appendix B of this manual.**

NOTICE

This product must be installed by a licensed plumber or gas fitter when installed within the Commonwealth of Massachusetts. See Appendix C for additional important information about installing this product within the Commonwealth of Massachusetts.

IV. Locating the Boiler

1. Observe the minimum clearances shown in Figure 4.1. These clearances apply to combustible construction as well as non-combustible walls, floors, ceilings and doors.
2. Note the recommended service clearances in Figure 4.1. These service clearances are recommended, but may be reduced to the combustible clearances provided:
   a. Access to the front of the boiler is provided through a door.
   b. Access is provided to the condensate trap located beneath the boiler.

   Note that servicing the boiler will become increasingly difficult as these service clearances are reduced.
3. Observe the following clearances from piping to combustible construction:

   Non-concentric vent (exhaust): ¼"
   Air intake piping: 0"
   Hot water piping: ¼"
4. The relief valve and gauge must be installed in the location shown in Figure 2.1 and must be in the same space as the boiler.
5. The boiler should be located so as to minimize the length of the vent system.
6. The combustion air piping must terminate where outdoor air is available for combustion and away from areas that will contaminate combustion air. Avoid areas near chemical products containing chlorine, chloride based salts, chloro/fluoro carbons, paint removers, cleaning solvents and detergents.

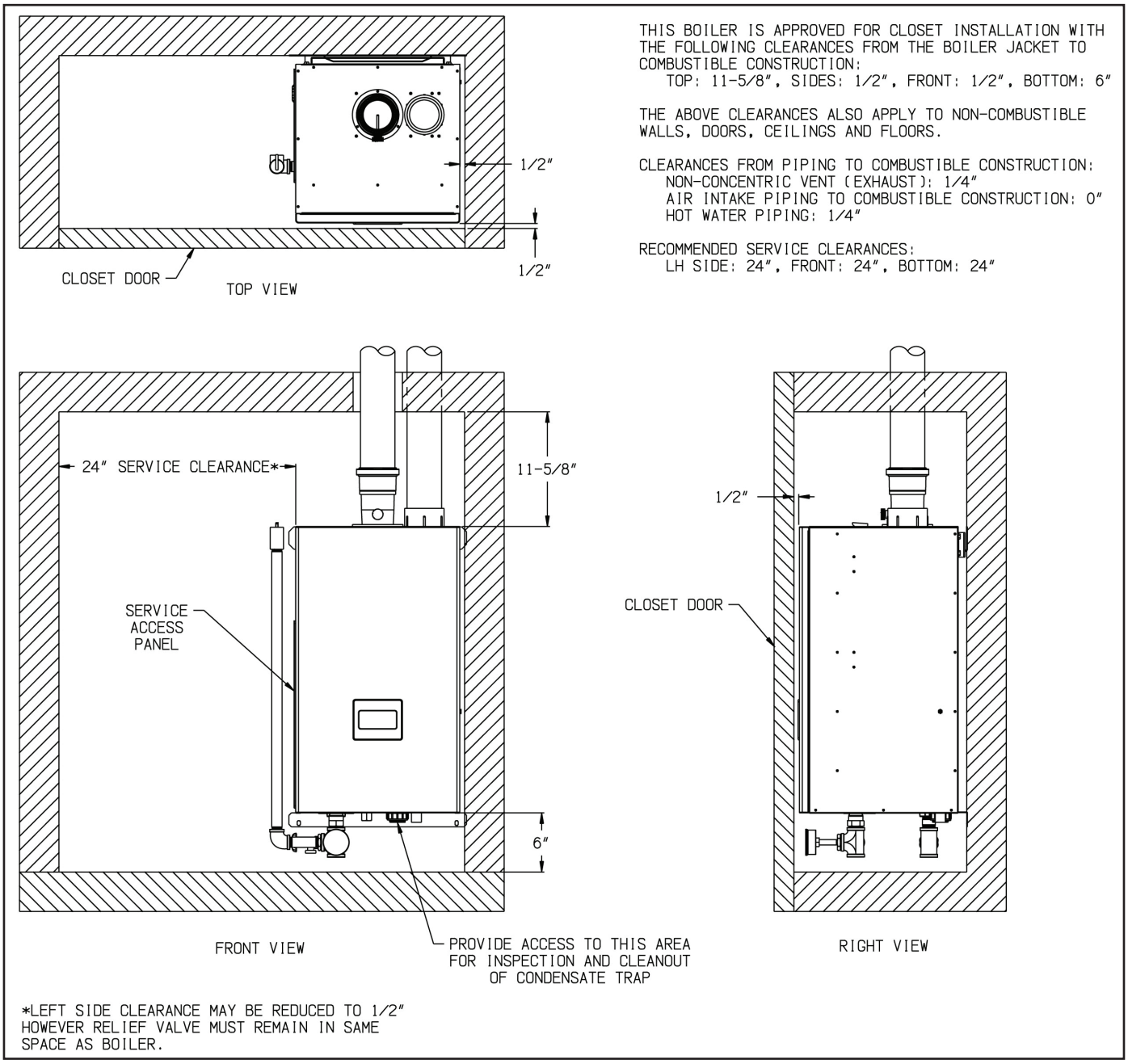

Figure 4.1: Minimum Clearances To Combustible Construction

V. Mounting The Boiler

A. Wall Mounting

CAUTION

This boiler weighs as much as 119 pounds:

- **Two people are required to safely lift this boiler onto the wall mounting hook.**
- **Make sure that wall mounting hook is anchored to a structure capable of supporting the weight of the boiler and attached piping when filled with water. Jurisdictions in areas subject to earthquakes may have special requirements for supporting this boiler. These local requirements take precedence over the requirements shown below.**

1. If the boiler is installed on a framed wall, minimum acceptable framing is 2 x 4 studs on 16” centers. The boiler mounting holes are on 16” centers for installation between two studs at the standard spacing. In cases where the boiler cannot be centered between the studs, or where the studs are spaced closer than 16” apart, the boiler may be anchored to ¾” plywood or horizontal 2 x 4’s anchored to the studs.
2. 5/16” x 2” lag screws and washers are provided for mounting this boiler. These lag screws are intended for mounting the boiler directly onto studs covered with ½” sheathing. When the boiler is attached to other types of construction, such as masonry, use fasteners capable of supporting the weight of the boiler and attached piping in accordance with good construction practice and applicable local codes.
3. Make sure that the surface to which the boiler is mounted is plumb.
4. Before mounting the boiler, make sure that wall selected does not have any framing or other construction that will interfere with the vent pipe penetration.
5. Once a suitable location has been selected for the boiler, and any needed modifications have been made to the wall, use Figure 5.1 to locate holes “A” and “B”. Make sure that the horizontal centerline of these holes is level. Holes “C” and “D” may also be drilled at this time or after the boiler is hung on the wall. If the 5/16” x 2” lag screws are used, drill 3/16” pilot holes.
6. The wall mounting hook is used to secure the boiler to the shipping pallet. Remove this hook from the pallet and secure to the wall using the 5/16” x 2” lag screws and washers, or other suitable anchors as appropriate (Figure 5.2). Make sure the hook is level.
7. Hang the boiler on the wall hook as shown in Figure 5.2.
8. If not already done in Step (5) locate and drill holes “C” and “D” using the obround slots in the bottom mounting flange. Secure the bottom flange to the wall using the 5/16”x 2” lag screws, or other fasteners as appropriate (Figure 5.2).
9. Verify that the front of the boiler is plumb. If it is not, install washers at holes “C” and “D” between the bottom mounting flange and the wall to adjust.

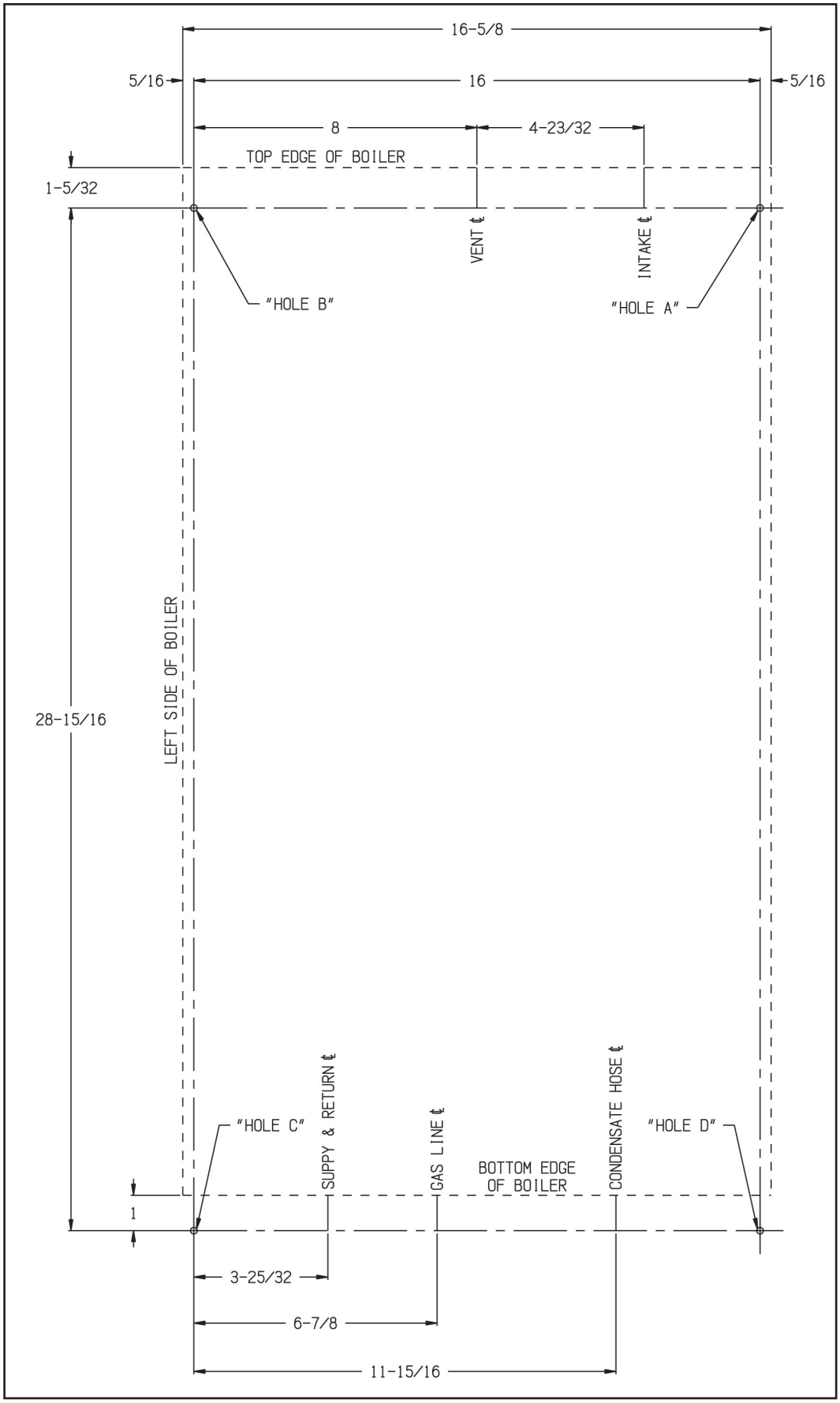

Figure 5.1 Wall Layout/Mounting Hole Location

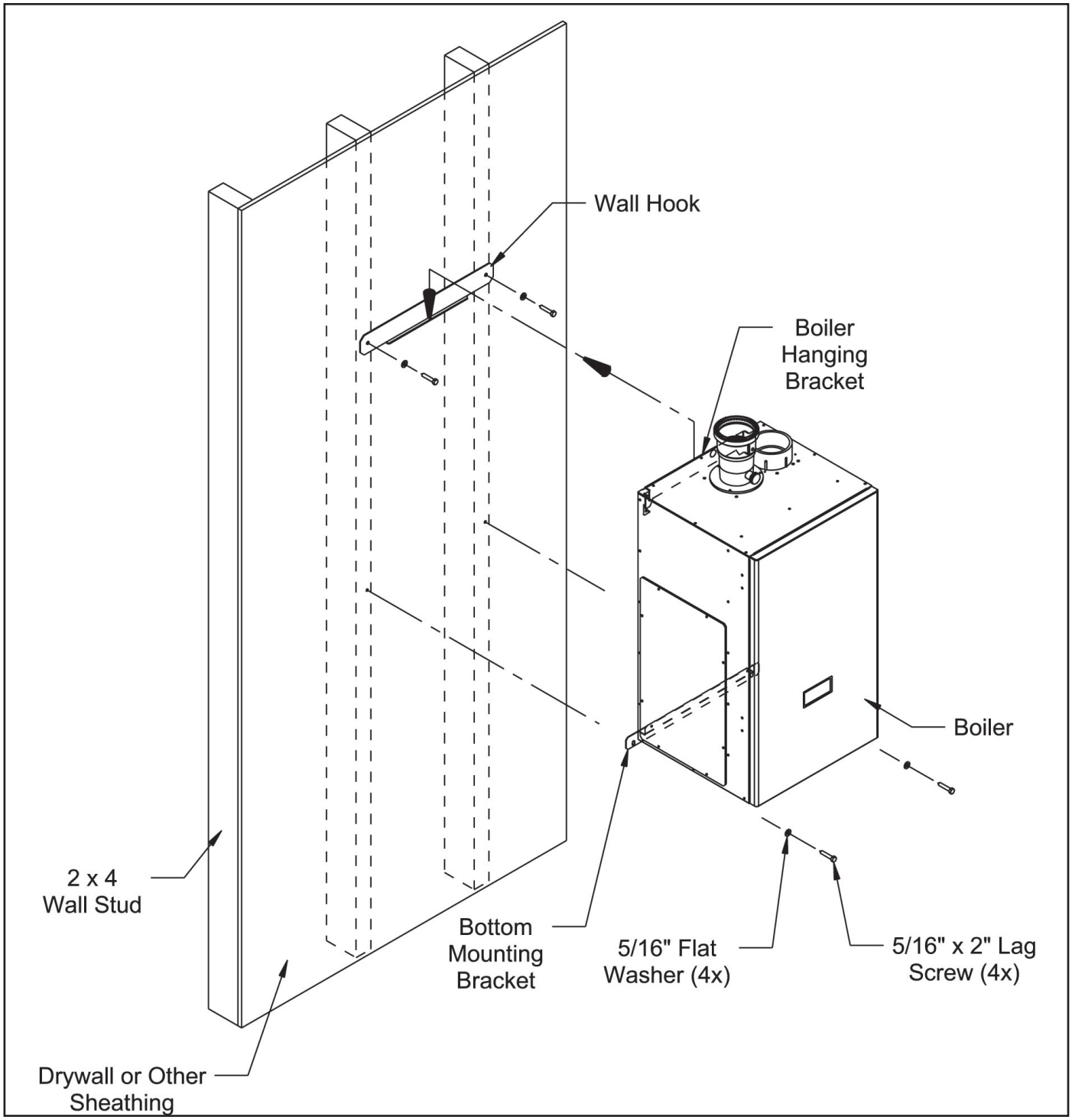

Figure 5.2 Boiler Mounting Bracket Installation / Boiler Wall Mounting

VI . Air for Ventilation

WARNING

Outdoor combustion air must be piped to the air intake. Never pipe combustion air from areas containing contaminates such as swimming pools and laundry room exhaust vents. Contaminated combustion air will damage the boiler and may cause property damage, personal injury or loss of life.

Air for combustion must always be obtained directly from outdoors. See Section VII for intake piping. Adequate air for ventilation will be present if the clearances specified in this manual are maintained. If this boiler is installed in a room with other appliances, provide adequate air for combustion and/or ventilation air in accordance with the manufacturer's installation manual or applicable code.

VII. Venting

WARNING

Asphyxiation Hazard. Failure to vent this boiler in accordance with these instructions could cause products of combustion to enter the building resulting in severe property damage, personal injury or death.

Do not interchange vent systems or materials unless otherwise specified.

The use of thermal insulation covering vent pipe and fittings is prohibited.

Do not use a barometric damper, draft hood or vent damper with this boiler.

When using the CPVC/PVC vent option, the use of CPVC is required when venting in vertical or horizontal chase ways.

Any CPVC vent materials supplied with this boiler do not comply with B149.1.S1-07 and are not approved for use in Canadian jurisdictions that require vent systems be listed to ULC S636-2008. In these jurisdictions, vent this boiler using a listed ULC S636 Class IIB venting system.

Do not locate vent termination where exposed to prevailing winds. Moisture and ice may form on surface around vent termination. To prevent deterioration, surface must be in good repair (sealed, painted, etc.).

Do not locate air intake vent termination where chlorines, chlorofluorocarbons (CFC's), petroleum distillates, detergents, volatile vapors or other chemicals are present. Severe boiler corrosion and failure will result.

The use of cellular core PVC (ASTM F891), cellular core CPVC or Radel (polyphenolsulfone) is prohibited.

Do not locate vent termination under a deck.

Do not reduce specified diameters of vent and combustion air piping.

When installing vent pipe through chimney, as a chase, no other appliance can be vented into the chimney.

Do not allow low spots in the vent where condensate may pool.

A. Vent System Design

There are three basic ways to vent this boiler:

- **Horizontal ("Side Wall") Twin Pipe Venting (Figure 7.0a)** - Vent system exits the building through an outside wall. Combustion air and flue gas are routed between the boiler and the terminal(s) using separate pipes for at least part of the way. A summary of Horizontal Twin Pipe venting options is shown in Table 7.5.
- **Vertical Twin Pipe Venting (Figure 7.0b)** - Vent system exits the building through a roof. Combustion air and flue gas are routed between the boiler and the terminal(s) using separate pipes for at least part of the way. A summary of Vertical Twin Pipe venting options is shown in Table 7.13
- **Split Venting (Figure 7.0c)** - Exhaust system exits the building through a roof, and combustion air is drawn from a terminal mounted on the side wall. A summary of split venting options is shown in Table 7.21

All of these systems are considered "direct vent" because the air for combustion is drawn directly from the outdoors into the boiler. <u>One of the vent option columns in Tables 7.5, 7.13, 7.21 must match the planned vent and air intake system exactly.</u>

Design details applying to all vent systems are shown in this section. Observe all design requirements in this section, as well as those unique to the type of system being installed:

- B - Design Requirements Unique to Horizontal Twin Pipe Vent Systems
- C - Design Requirements Unique to Vertical Twin Pipe Vent Systems
- D - Design Requirements Unique to Split Vent Systems

1. <u>Approved Vent Systems and Materials</u> – The following materials and vent systems may be used to vent this boiler:
   - CPVC – Use only CPVC listed to ASTM F441. In Canada, this pipe must also be listed to ULC S636.
   - PVC – PVC may be used only as permitted in this manual. All PVC must be listed to ASTM D2665. At least 30" of CPVC pipe, and at least one CPVC elbow, must be installed between the boiler's vent connection and the PVC pipe. Use of foam core PVC is not permitted for venting. PVC vent pipe may not be used to vent this boiler in Canada.

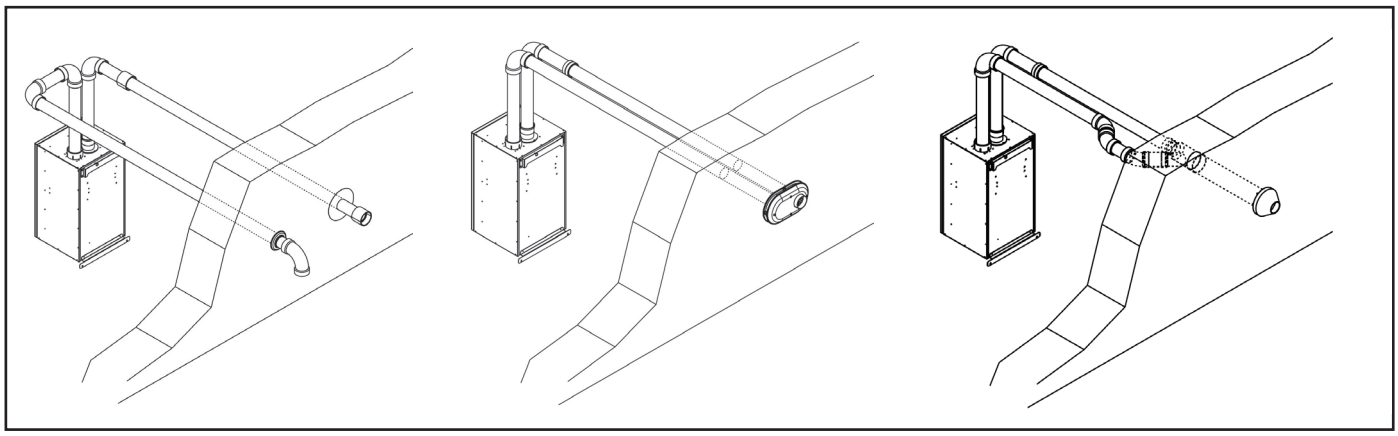

Figure 7.0a: Horizontal Twin Pipe

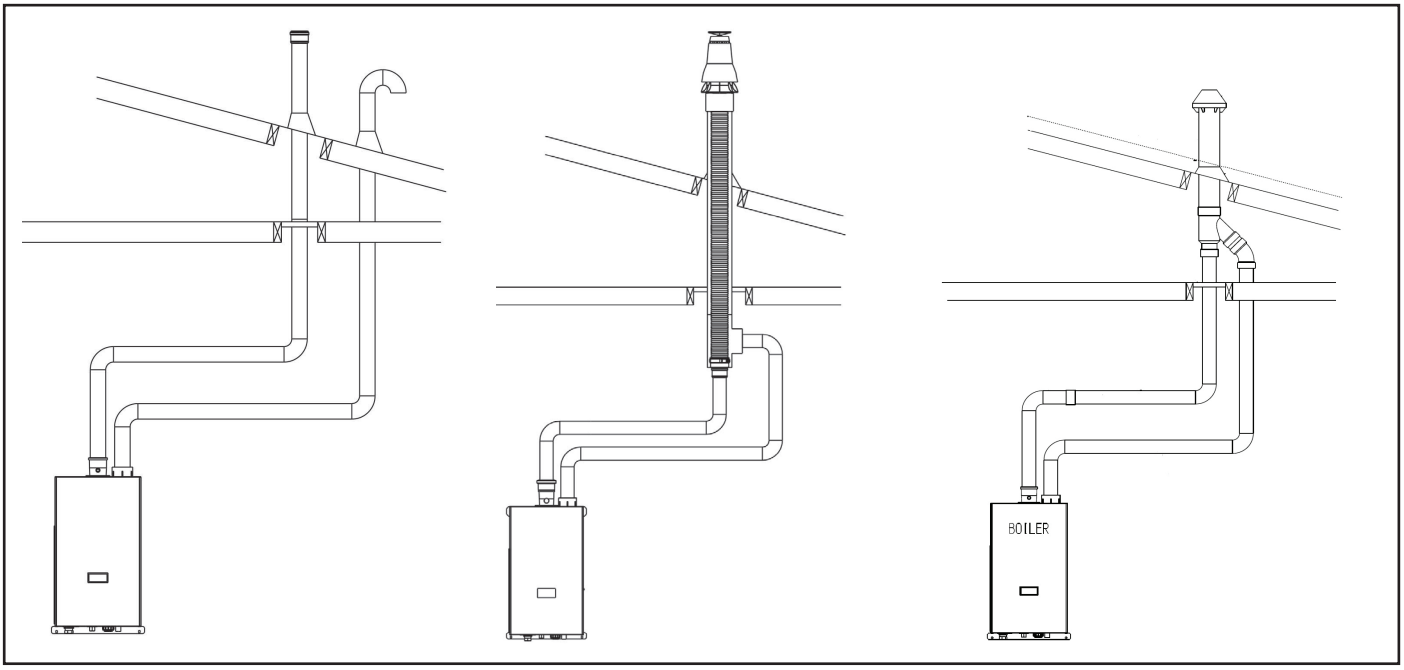

Figure 7.0b: Vertical Twin Pipe

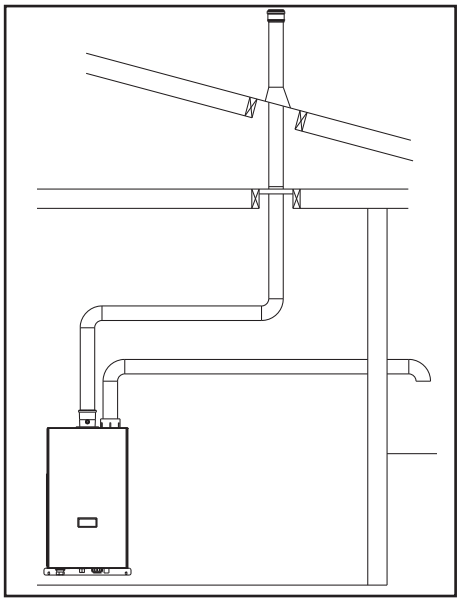

Figure 7.0c: Split Venting

- DuraVent PolyPro - ULC S636 listed Polypropylene special gas vent system. Use of flex piping is not permitted.
- Selkirk Polyflue - ULC S636 listed Polypropylene special gas vent system.
- Centrotherm InnoFlue SW - ULC S636 listed Polypropylene special gas vent system. Use of flex piping is not permitted.

Use PVC and/or CPVC for the air intake system. PVC may be used for all air intake piping between the intake terminal and the boiler.

When CPVC and/or PVC pipe is used, it must be joined using primer and cement that is listed for use with the pipe material being joined (PVC, CPVC, or CPVC to PVC).

2. Vent Components Supplied with this Boiler – This boiler is supplied with some of the components needed for 3" CPVC/PVC venting (Vent Option 2). A list of these components is supplied in Table 7.26. Components not supplied may be procured locally. The CPVC Pipe and elbow supplied with this boiler are not listed to ULC S636 and may not be used in Canada.
3. Maximum Vent and Air Intake Lengths - The maximum length of the vent air intake piping depends upon the vent option selected and the boiler size. See Tables 7.5, 7.13 or 7.21 for the maximum vent lengths. These maximum lengths apply to both the vent and intake piping (e.g. Option 1 may have up to 60ft of intake and 60ft of vent piping). For all vent systems, the lengths shown in Tables 7.5, 7.13 and 7.21 are in addition to the first 90° elbow. If more elbows are desired, the maximum allowable vent length must be reduced by the amount shown in Table 7.1 for each additional elbow used. Termination fittings are never counted.

The elbows supplied with the boiler are "standard radius" elbows. It is recommended that all field supplied PVC or CPVC elbows be "1/4 Bend" (Sanitary 90° El) or "Long Sweep 1/4 Bend" type elbows (Figure 7.2). In this manual "sanitary" and "long sweep" elbows are treated as having the same equivalent length.

Example:

A 3" twin pipe horizontal CPVC/PVC vent system is planned for a horizontally vented 120MBH model which has the following components in the vent system:

- *1 ft CPVC Straight Pipe*
- *90 CPVC Elbow (short bend)*
- *1-1/2 ft CPVC Straight Pipe*
- *Coupling*
- *10 ft PVC Straight Pipe*
- *90 PVC Elbow (Sanitary Elbow Design)*
- *15 ft PVC Straight Pipe*
- *PVC Coupling Terminal*

The Vent Option #2 column in Table 7.5 describes a horizontal direct vent system using 3" CPVC and PVC pipe. From this column, we see that the boiler may have a vent length of up to 135ft. The first CPVC 90 degree elbow is not considered. From Table 7.1, we see that the equivalent length of the 90 PVC elbow is 4ft and that the equivalent length of the coupling is 0ft. The total equivalent length of the planned venting system is therefore:

1ft (Straight CPVC) + 0ft (first short bend CPVC 90 Elbow) + 1.5ft (Straight CPVC) + 0ft (Coupling) + 10ft (Straight PVC) + 4ft (PVC 90 Sanitary Elbow) + 15ft (Straight PVC) + 0ft (Coupling Terminal) = 31.5ft.

Since Table 7.1 shows a maximum allowable vent length of 135ft, the planned vent system length is acceptable

The flex venting used on some of the Vertical Twin Pipe and Split Vent Options also reduces the maximum allowable vent length. See Sections VII-C or VII-D for details.

NOTICE
Do not exceed maximum vent/combustion air system length. Refer to Tables 7.1 and 7.13 in this section for maximum vent/combustion air system length.
Use only vent and combustion air terminals and terminal locations shown in Tables 7.1 and 7.13 and related Figures in this section.

4. Minimum Vent and Air Intake Lengths - Observe the minimum vent lengths shown in Tables 7.1, 7.13 and 7.21.
5. Clearances to Combustibles - Maintain the following clearances from the vent system to combustible construction:
   - Vent - 1/4” (also observe clearances through both combustible and non-combustible walls - see 9 below)
   - Air Intake - 0”
   - Concentric Portion of Concentric Terminals - 0”
6. Pitch of Horizontal Vent Piping - Pitch all horizontal vent piping so that any condensate which forms in the piping will run towards the boiler.
   - Pitch CPVC/PVC vent piping 1/4” per foot.
   - Pitch Polypropylene vent piping 5/8” per foot.

   Les chaudières de catégories I, II et IV doivent présenter des tronçons horizontaux dont la pente montante est d’au moins 5/8 po par pied (52 mm/m) entre la chaudière et l’évent.

Table 7.1: Vent/ Air Intake Fitting Equivalent Length

CPVC/PVC Fitting	Equivalent Length (ft)	PolyPro, Polyflue or InnoFlue Vent Fitting	Equivalent Length (ft)
2” 90° Elbow (“Sanitary Bend”)	2.6	2” 90° Elbow	4.5
3” 90° Elbow (“Sanitary Bend”)	4.0	3” 90° Elbow	8.7
2” 90° Elbow (“Short Bend”)	6.0	2” 90° Elbow	2.5
3” 90° Elbow (“Short Bend”)	10.0	3” 45° Elbow	4.6
2” 45° Elbow	1.5		
3” 45° Elbow	2.0		
2” Coupling	0.0		
3” Coupling	0.0		

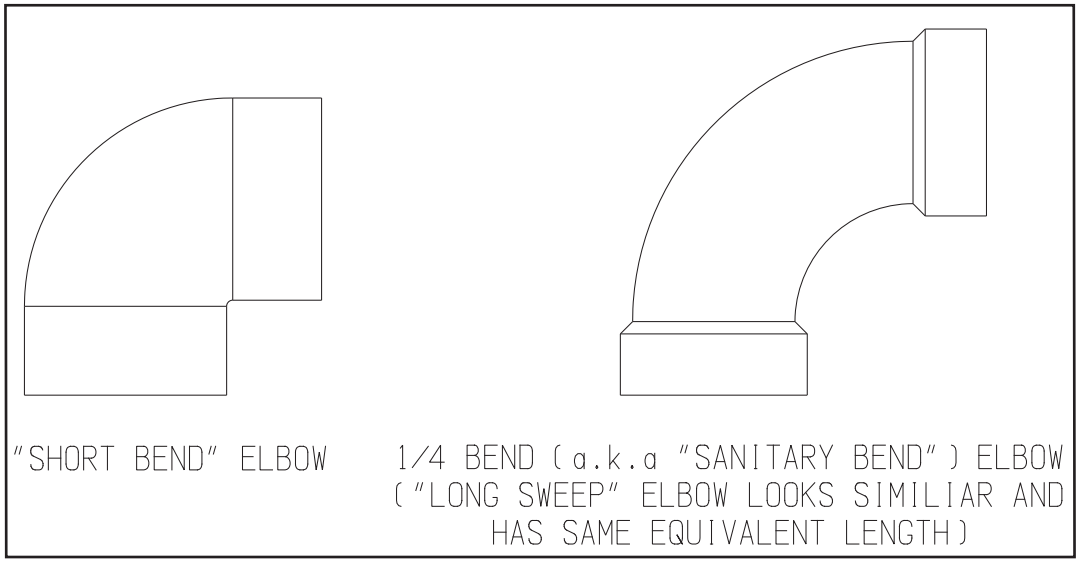

Figure 7.2: CPVC and PVC Elbows

7. Supporting Pipe - Vertical and horizontal sections of pipe must be properly supported. Maximum support spacing is as follows:
   - Support CPVC/PVC horizontally and vertically every 4 feet.
   - Support DuraVent PolyPro horizontally near the female end of each straight section of pipe and vertically every 10 feet.
   - Support Centrotherm InnoFlue horizontally every 39 inches with additional supports at elbows and vertically every 78".
   - Support 2" Selkirk Polyflue horizontally every 30". Support 3" Polyflue horizontally every 39". Support vertical runs of both 2" and 3" Polyflue every 16 ft.

   Les instructions d´installation du système d´évacuation doivent préciser que les sections horizontales doivent être supportées pour prévenir le fléchissement. Les méthodes et les intervalles de support doivent être spécifiés. Les instructions divent aussi indiquer les renseignements suivants:
   - les chaudières de catégories II et IV doivent être installées de façon à empêcher l´accumulation de condensat: et
   - si nécessaire, les chaudières de catégories II et IV doivent être pourvues de dispositifs d´évacuation du condensat.

8. Allowing for Thermal Expansion -
   - For CPVC/PVC pipe design the vent system to allow 3/8" of thermal expansion for every 10ft of CPVC/PVC pipe. The boiler will always act as an anchor to one end of the vent system. If at all possible, select and install hangers and wall thimbles so that the vent system can expand towards the terminal. When a straight run of pipe exceeds 20ft and must be restrained at both ends, an offset or expansion loop must be provided (Figures 7.3a, 7.3b). When a straight horizontal run of pipe exceeds 20ft and is restrained at one end with an elbow at the other, avoid putting a hanger or guide less than "Y" inches from the elbow in the adjoining straight section (Figure 7.3c). Thermal expansion fittings are not permitted.
   - When properly assembled expansion of PolyPro, Polyflue and InnoFlue vent systems is accommodated at the joints. See Part VII-F, G & H of this manual for details.

9. Running PVC Vent Pipe Inside Enclosures and Through Walls - PVC vent pipe must be installed in a manner that permits adequate air circulation around the outside of the pipe:
   - Do not enclose PVC venting - Use CPVC in enclosed spaces, even if PVC is installed upstream.
   - PVC venting may not be used to penetrate combustible or non-combustible walls unless all of the following conditions are met:
     a. The wall penetration is at least 66 inches from the boiler as measured along the vent.
     b. The wall is 12" thick or less
     c. An airspace of at least that shown in Figure 7.4 is maintained around the OD of the vent.

   If any of these conditions cannot be met, use CPVC for the wall penetration.

10. Vent Manufacturer's Instructions – The vent system manufacturer may have additional vent system design requirements. Read and follow the vent manufacturer's instructions in addition to those shown here. Where a conflict arises between the two sets of instructions, the more restrictive requirements shall govern.

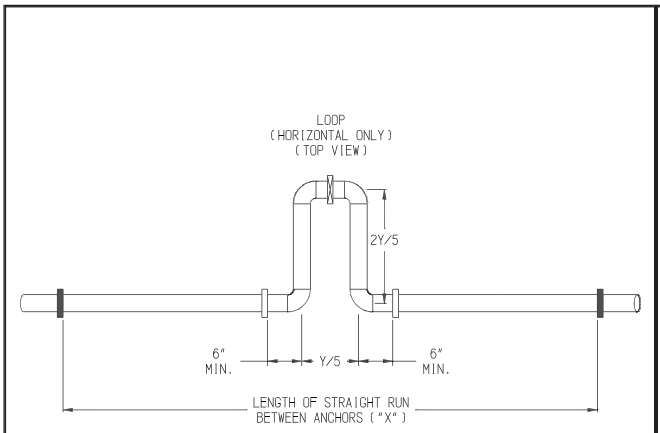

Figure 7.3a

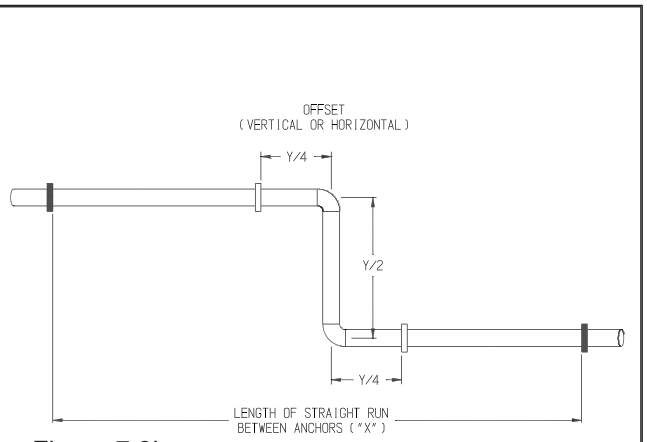

Figure 7.3b

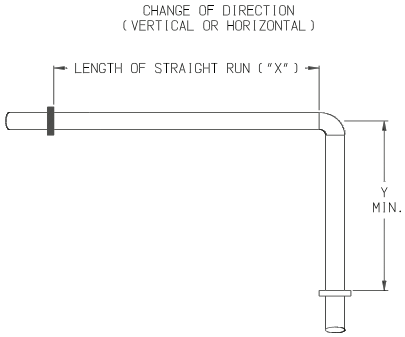

Figure 7.3c

PIPE DIA. (IN.)	"X" (FT.)	"Y" (IN.)
3	20	50
	30	61
	40	70
	50	79
	60	86
4	20	56
	30	69
	40	80
	50	89
	60	98

KEY

- ANCHOR (RESTRICTS LINEAR MOVEMENT)
- HANGER (ALLOWS LINEAR MOVEMENT)
- CAN USE EITHER ANCHOR OR HANGER

Figure 7.3: Expansion Loops for CPVC/PVC Pipe

MAX. WALL THICKNESS ("T")	2"*	6"	12"
MINIMUM AIR SPACE AROUND PIPE ("C")	0"*	1"	1-3/4"

*WALL MUST BE OF NON-COMBUSTIBLE CONSTRUCTION

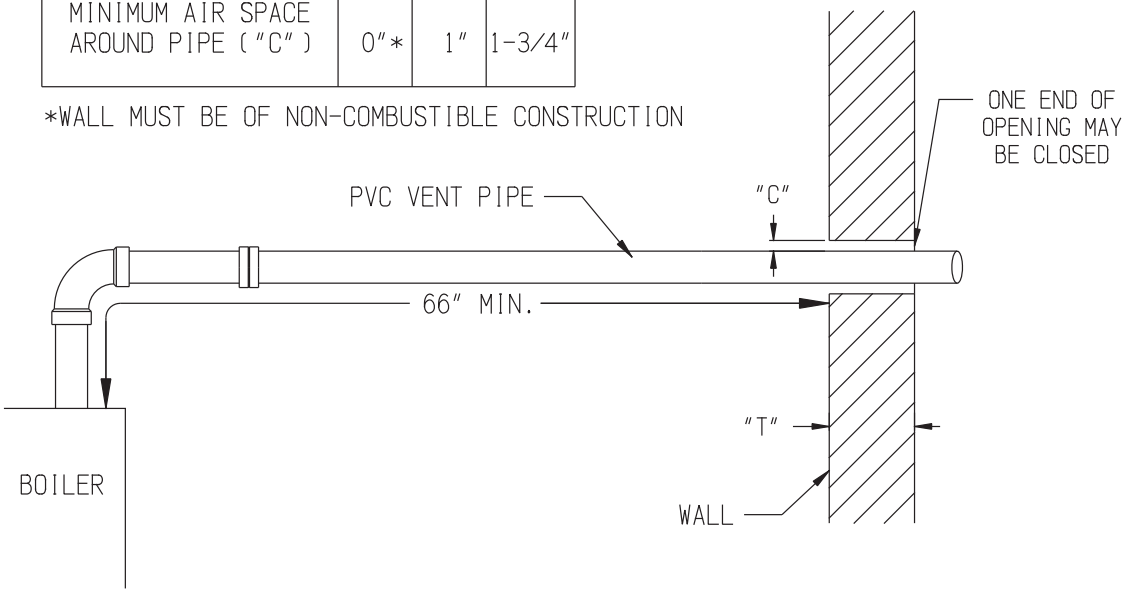

Figure 7.4: Wall Penetration Clearances for PVC Vent Pipe

B. Design Requirements Unique to Horizontal Twin Pipe Venting Systems

Table 7.5 summarizes all horizontal twin pipe vent options. Illustrations of horizontal twin pipe vent systems are shown in Figures 7.6 – 7.10. In addition to the requirements in Part VII-A, observe the following design requirements:

1. Permitted Terminals for Horizontal Venting:

Terminal Option A: Fittings (Acceptable for Vent Options 1-8) – Vent terminates in a plain end (coupling for PVC, bell end for PolyPro, Polyflue and plain end pipe for InnoFlue). Intake terminates in a PVC 90 sweep elbow pointing down. Outer edge of both terminals must be within 10" of the wall surface (Figures 7.6, 7.9). The section of DuraVent PolyPro, Centrotherm InnoFlue or Selkirk Polyflue exposed to the outdoors must be UV resistant.

Use of rodent screens is generally recommended for both terminations. Two rodent screens suitable for 3" PVC terminals are supplied with the boiler and are installed as shown in Figure 7.28. If 2" CPVC is used, these screens can be cut to fit into the smaller fittings. Rodent screens ("bird guards") for PolyPro, InnoFlue and Polyflue are as follows:

Size/Vent System	Rodent Screen ("Bird Guard")
2" PolyPro	DuraVent # 2PPS-BG
3" PolyPro	DuraVent # 3PPS-BG
2" Polyflue	Selkirk # 2PF-HVST
3" Polyflue	Selkirk # 3PV-HVST
2" InnoFlue	Centrotherm # IASPP02
3" InnoFlue	Centrotherm # IASPP03

If necessary to achieve required clearance above grade, CPVC or CPVC/PVC vent systems may be terminated using fittings on snorkels as shown in Figure 7.12. When this is done, the equivalent length of all pipe on the exterior of the building, except for the terminal fittings themselves, must be counted when calculating the equivalent length. The maximum vertical run of the snorkel is 7 feet. Brace both the vent and inlet piping if required. PolyPro, InnoFlue and Polyflue may not be snorkeled.

Terminal Option B: Ipex Low Profile Terminal (Acceptable for Vent Options 1,2) – This terminal is shown in Figure 7.7. If the terminal is oriented vertically (alternate orientation shown in Fig 7.7) the exhaust opening must be on the top as shown. See Part VII-E of this manual and the Ipex instructions provided with the terminal, for installation details.

Terminal Option C: DiversiTech "Low Profile" Terminal (Acceptable for Vent Options 1,2) – This terminal is shown in Figure 7.7. If the terminal is oriented vertically (alternate orientation shown in Fig 7.7) the exhaust opening must be on the top as shown. See Part VII-E of this manual and the DiversiTech instructions provided with the terminal, for installation details.

Terminal Option D: Ipex FGV Concentric Terminal (Acceptable for Vent Options 1,2) - This terminal is shown in Figure 7.8 and may be used with CPVC/PVC vent systems. This terminal is available in various lengths and in both PVC and CPVC. Terminals acceptable for use with these vent options are as follows:

Ipex PN	FGV Concentric Terminal Description
196005	2 x 16" PVC
196105	2 x 28" PVC
196125	2 x 40" PVC
196006	3 x 20" PVC
196106	3 x 32" PVC
196116	3 x 44" PVC
197107	3 x 32" CPVC
197117	3 x 44" CPVC

See Part VII-E of this manual and the Ipex instructions provided with the terminal, for installation details.

Terminal Option E: DiversiTech Concentric Terminal (Acceptable for Vent Options 1,2) - This terminal is shown in Figure 7.8 and may be used with CPVC/PVC vent systems. See Part VII-E of this manual and the DiversiTech instructions provided with the terminal, for installation details.

Terminal Option F: DuraVent PolyPro Concentric Terminal (Acceptable for Vent Options 3,4) - This terminal is shown in Figure 7.10 and may be used with DuraVent 2" or 3" PolyPro vent systems. See Part VII-F of this manual and the DuraVent instructions provided with the terminal, for installation details.

Table 7.5: Summary of Horizontal Twin Pipe Venting Options

Vent Option		**1**	**2**	**3**	**4**	**5**	**6**	**7**	**8**
Illustrated in Figure		7.6, 7.7, 7.8	7.6, 7.7, 7.8	7.9, 7.10	7.9, 7.10	7.9	7.9	7.9	7.9
Pipe Penetration through Structure	Vent	Wall	Wall	Wall	Wall	Wall	Wall	Wall	Wall
	Intake	Wall	Wall	Wall	Wall	Wall	Wall	Wall	Wall
Material	Vent	CPVC/ PVC (Note 2)	CPVC/ PVC (Note 2)	DuraVent PolyPro (Rigid)	DuraVent PolyPro (Rigid)	Selkirk Polyflue	Selkirk Polyflue	Centro-therm InnoFlue SW	Centro-therm InnoFlue SW
	Intake	PVC	PVC	PVC	PVC	PVC	PVC	PVC	PVC
Nominal Diameter	Vent	2”	3”	2”	3”	2”	3”	2”	3”
	Intake	2”	3”	2”	3”	2”	3”	2”	3”
Min Equivalent Vent Length:									
Models	K2-080	12”	12”	12”	12”	12”	12”	12”	12”
	K2-100	12”	12”	12”	12”	12”	12”	12”	12”
	K2-120	Not Permitted	12”	Not Permitted	12”	Not Permitted	12”	Not Permitted	12”
	K2-150		52”		52”		52”		52”
	K2-180		52”		52”		52”		52”
Max Equivalent Vent Length (Note 1):									
Models	K2-080	60ft	135ft	60ft	135ft	60ft	135ft	60ft	135ft
	K2-100	60ft	135ft	60ft	135ft	60ft	135ft	60ft	135ft
	K2-120	Not Permitted	135ft	Not Permitted	135ft	Not Permitted	135ft	Not Permitted	135ft
	K2-150		135ft		135ft		135ft		135ft
	K2-180		135ft		135ft		135ft		135ft
Terminal Option A (Fittings)	Vent	Coupling w/screen (Note 3)	Coupling w/screen (Note 3)	2PPS-12B or 2PPS-36B w/screen	3PPS-12B or 3PPS-36B w/screen	2PF-10UV or 2PF-39UV w/screen	3PF-10UV or 3PF-39UV w/screen	ISEP02 or ISEP0239 w/screen	ISEP03 or ISEP0339 w/screen
	Intake	Elbow w/screen (Note 3)	Elbow w/screen (Note 3)	Elbow w/screen	Elbow w/screen	Elbow w/screen	Elbow w/screen	Elbow w/screen	Elbow w/screen
Terminal Option B (Ipex Low Profile)		Ipex # 196984	Ipex #196985	Not Permitted	Not Permitted	Not Permitted	Not Permitted	Not Permitted	Not Permitted
Terminal Option C (DiversiTech HVENT)		HVENT-2	HVENT-3	Not Permitted	Not Permitted	Not Permitted	Not Permitted	Not Permitted	Not Permitted
Terminal Option D (Ipex FGV Concentric)		Ipex 196105	Ipex 196006	Not Permitted	Not Permitted	Not Permitted	Not Permitted	Not Permitted	Not Permitted
Terminal Option E (DiversiTech CVENT)		CVENT-2	CVENT-3	Not Permitted	Not Permitted	Not Permitted	Not Permitted	Not Permitted	Not Permitted
Terminal Option F (DuraVent Horizontal Concentric)		Not Permitted	Not Permitted	2PPS-HK	3PPS-HK	Not Permitted	Not Permitted	Not Permitted	Not Permitted

Notes:

1. Max vent lengths shown also apply to the intake. For example, Vent Option #1 may have up to 60ft of vent pipe and also up to 60 ft of intake pipe.
2. First 30” of vent and vent Elbow connected to boiler must be CPVC. Downstream vent pipe can be PVC except as noted in text.
3. PVC Terminal coupling and inlet elbow may be offset on snorkels as shown in Figure 7.12.

2. Horizontal Vent and Air Intake Terminal Location - Observe the following limitations on the vent terminal location (also see Figure 7.11). When locating a concentric terminal, observe the limitations outlined below for "vent terminals".
   - Vent terminal must be at least 1 foot from any door, window, or gravity inlet into the building.
   - When Terminal Option A (fittings) are used, maintain the correct clearance and orientation between the intake and exhaust terminals. If possible, locate vent and combustion air terminals on the same wall to prevent nuisance shutdowns. If not, boiler may be installed with roof vent terminal and sidewall combustion air terminal (see Section D). When installed on the same wall, locate exhaust vent terminal at same height or higher than combustion air intake terminal. Horizontal separation: Recommended: 36", Minimum: 12", Maximum: none. Minimum horizontal separation of 12" is required regardless of vertical separation.
   - The bottom of all terminals must be at least 12" above the normal snow line. In no case should they be less than 12" above grade level.
   - The bottom of the vent terminal must be at least 7 feet above a public walkway.
   - Do not install the vent terminal directly over windows or doors.
   - The bottom of the vent terminal must be at least 3 feet above any forced air inlet located within 10 feet.
   - USA Only: A clearance of at least 4 feet horizontally must be maintained between the vent terminal and gas meters, electric meters, regulators, and relief equipment. Do not install vent terminal over this equipment. In Canada, refer to B149.1 Installation Code for clearance to meters, regulators and relief equipment.
   - Do not locate the vent terminal under decks or similar structures.
   - Top of terminal must be at least 24" below ventilated eves, soffits and other overhangs. In no case may the overhang depth exceed 48". Where permitted by the authority having jurisdiction and local experience, the terminal may be located closer to unventilated soffits. For the minimum vertical separation which depends upon the depth of the soffit, see Figure 7.11.
   - Vent terminal must be at least 6 feet from an inside corner.
   - Under certain conditions, water in the flue gas may condense, and possibly freeze, on objects around the vent terminal including on the structure itself. If these objects are subject to damage by flue gas condensate, they should be moved or protected.
   - Install the vent and air intake terminals on a wall away from the prevailing wind. Reliable operation of this boiler cannot be guaranteed if these terminals are subjected to winds in excess of 40 mph.
   - Air intake terminal must not terminate in areas that might contain combustion air contaminates, such as near swimming pools. See WARNING on page 15.

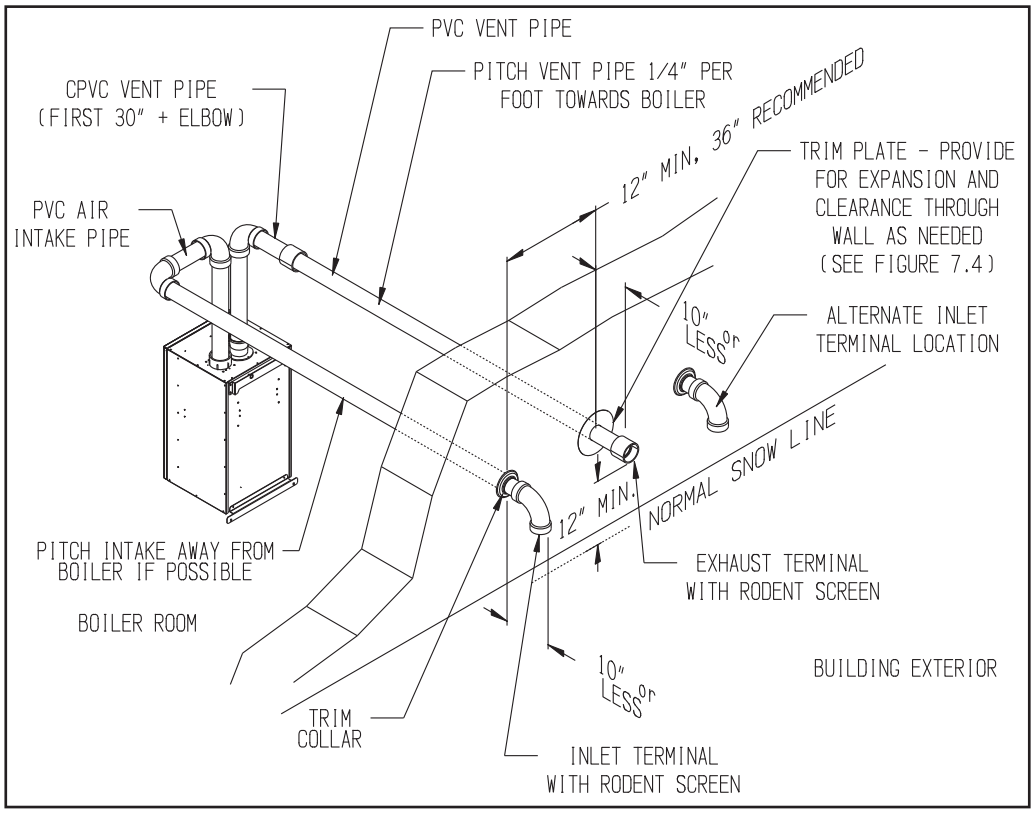

Figure 7.6: Horizontal CPVC/PVC Venting, (Vent Options #1 & 2, Terminal Option A)

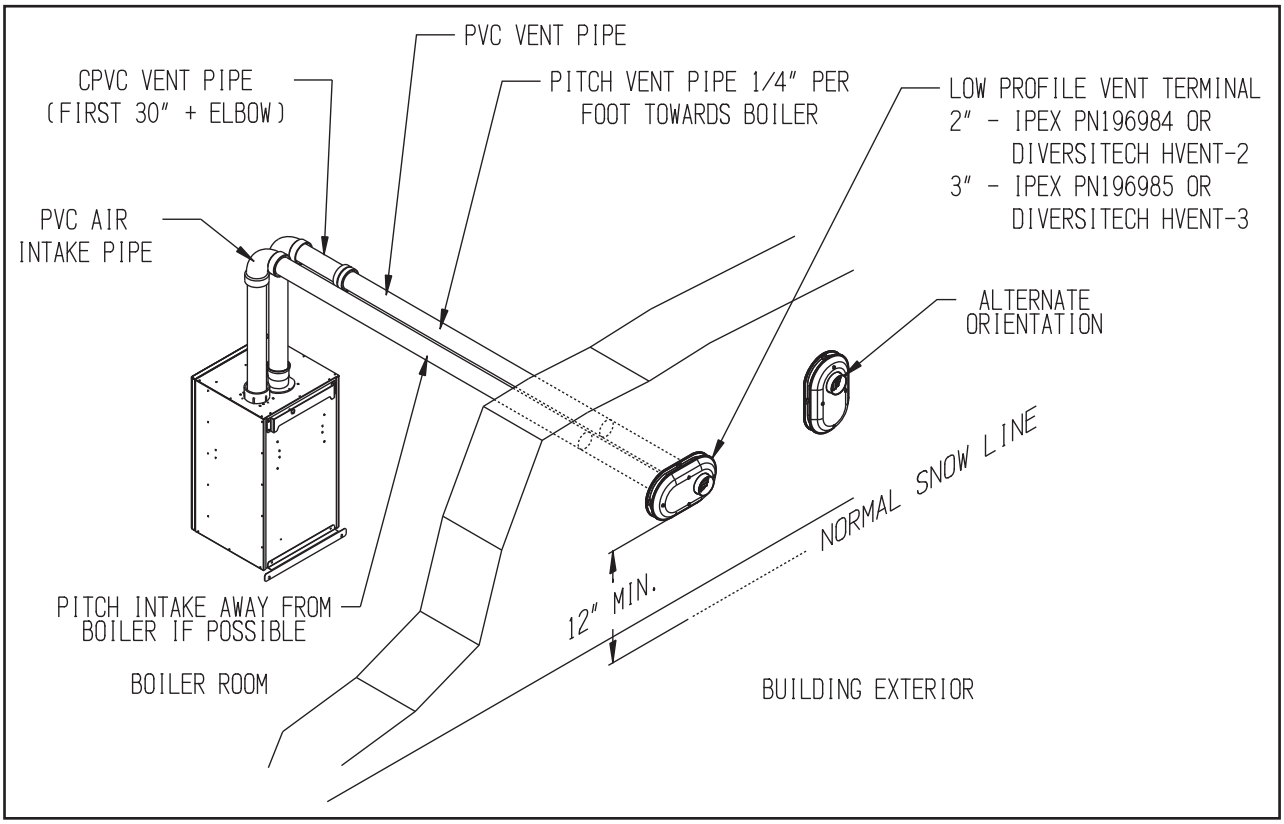

Figure 7.7: Horizontal CPVC/PVC Venting with Low Profile Terminal, (Vent Options #1 & 2, Terminal Options B & C)

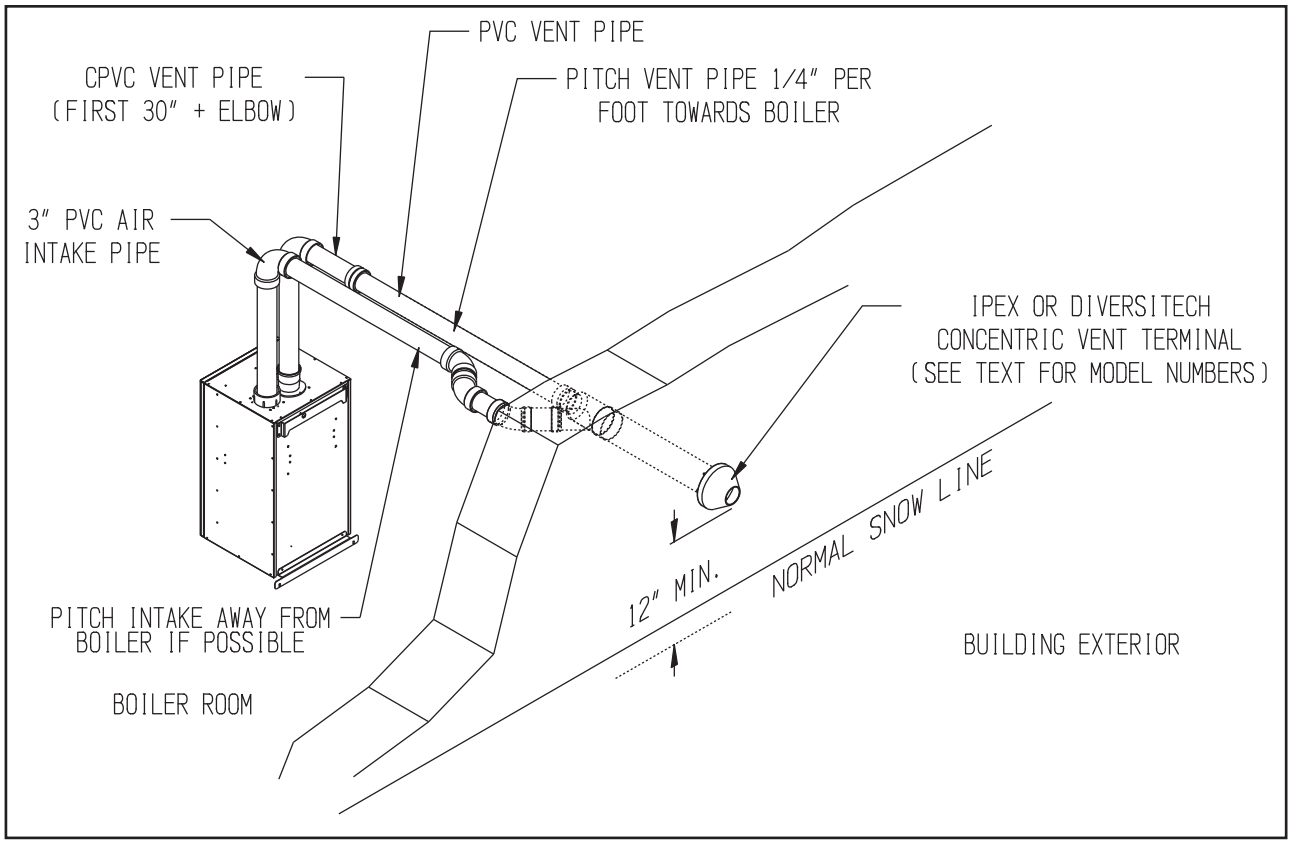

Figure 7.8: Horizontal CPVC/PVC Venting with Concentric Vent Terminal, (Vent Options #1 & 2, Terminal Options D & E)

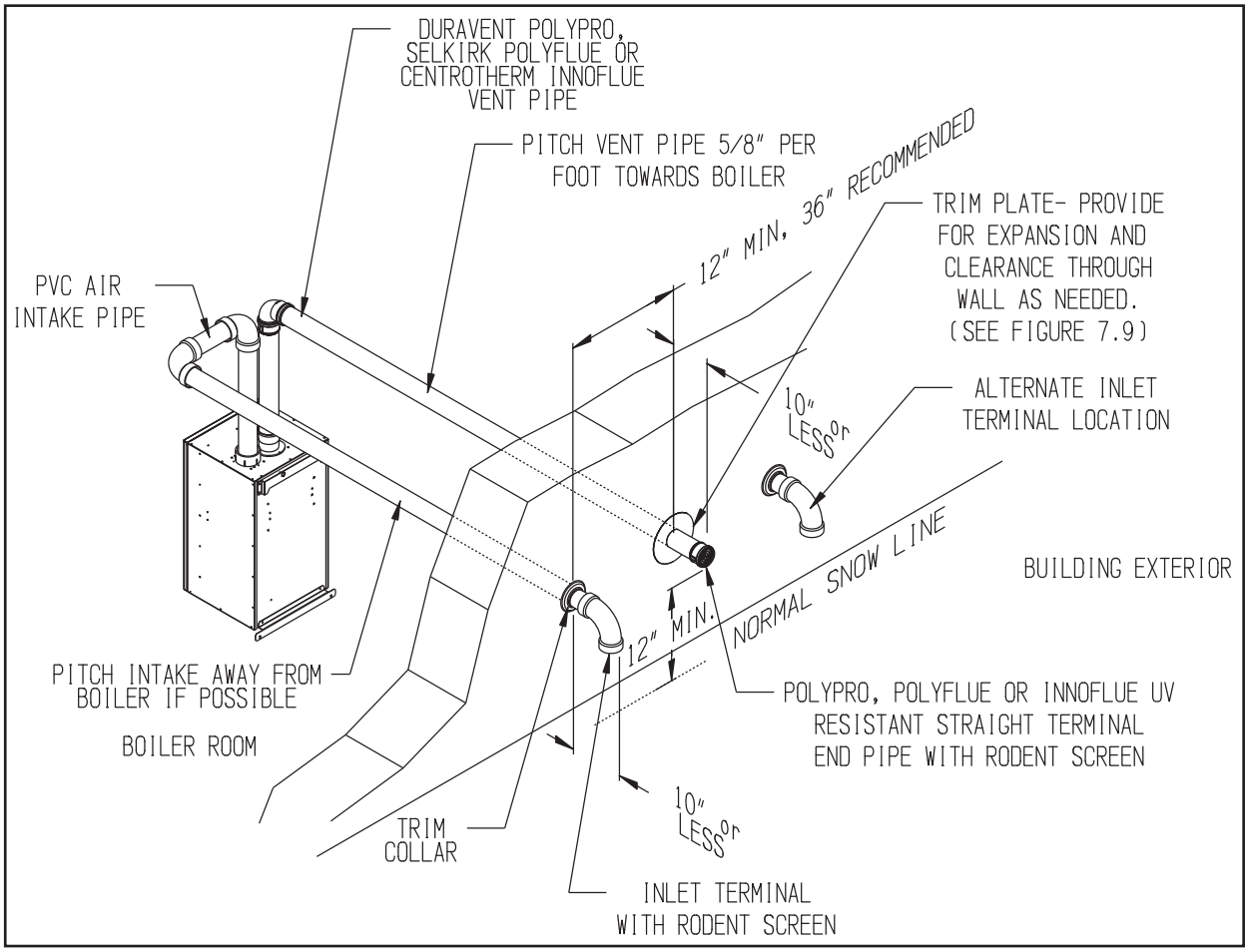

Figure 7.9: Duravent PolyPro, Selkirk, Polyflue or Centrotherm InnoFlue Horizontal Venting (Vent Option #3 - 8, Terminal Option A)

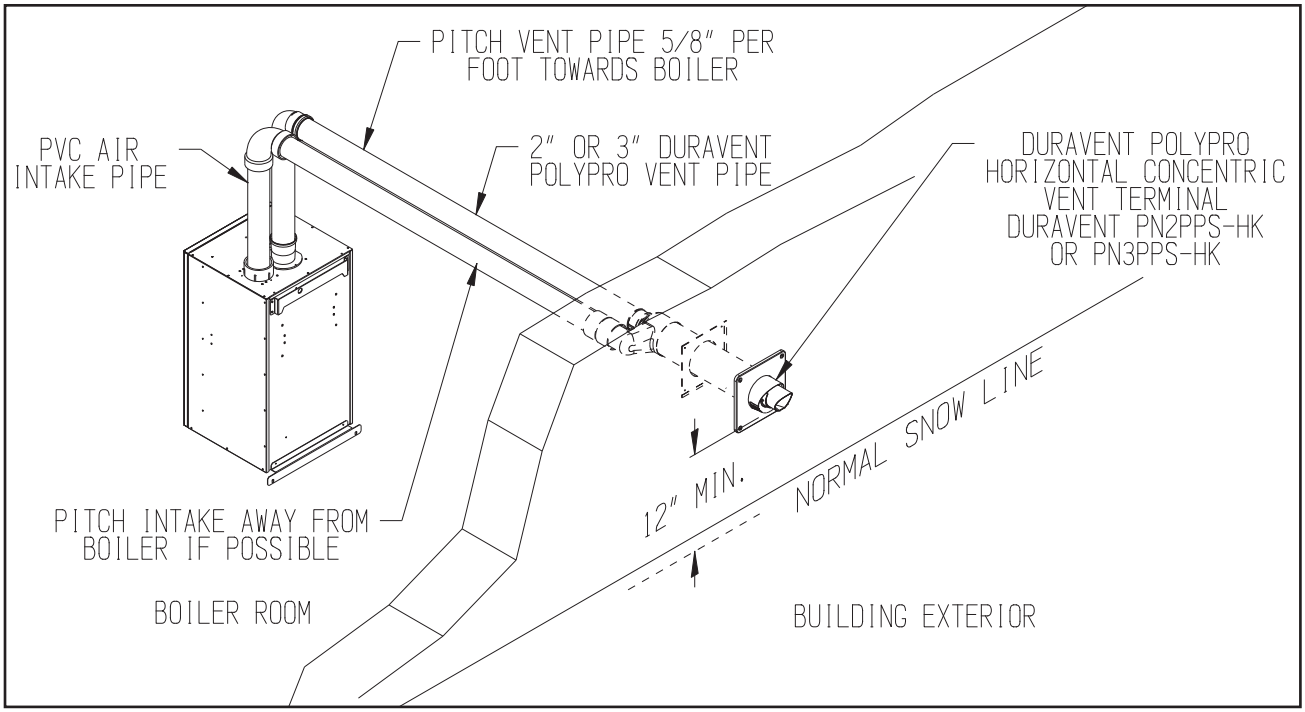

Figure 7.10: Duravent PolyPro Horizontal Venting with Concentric Terminal, (Vent Options #3 & 4, Terminal Option F)

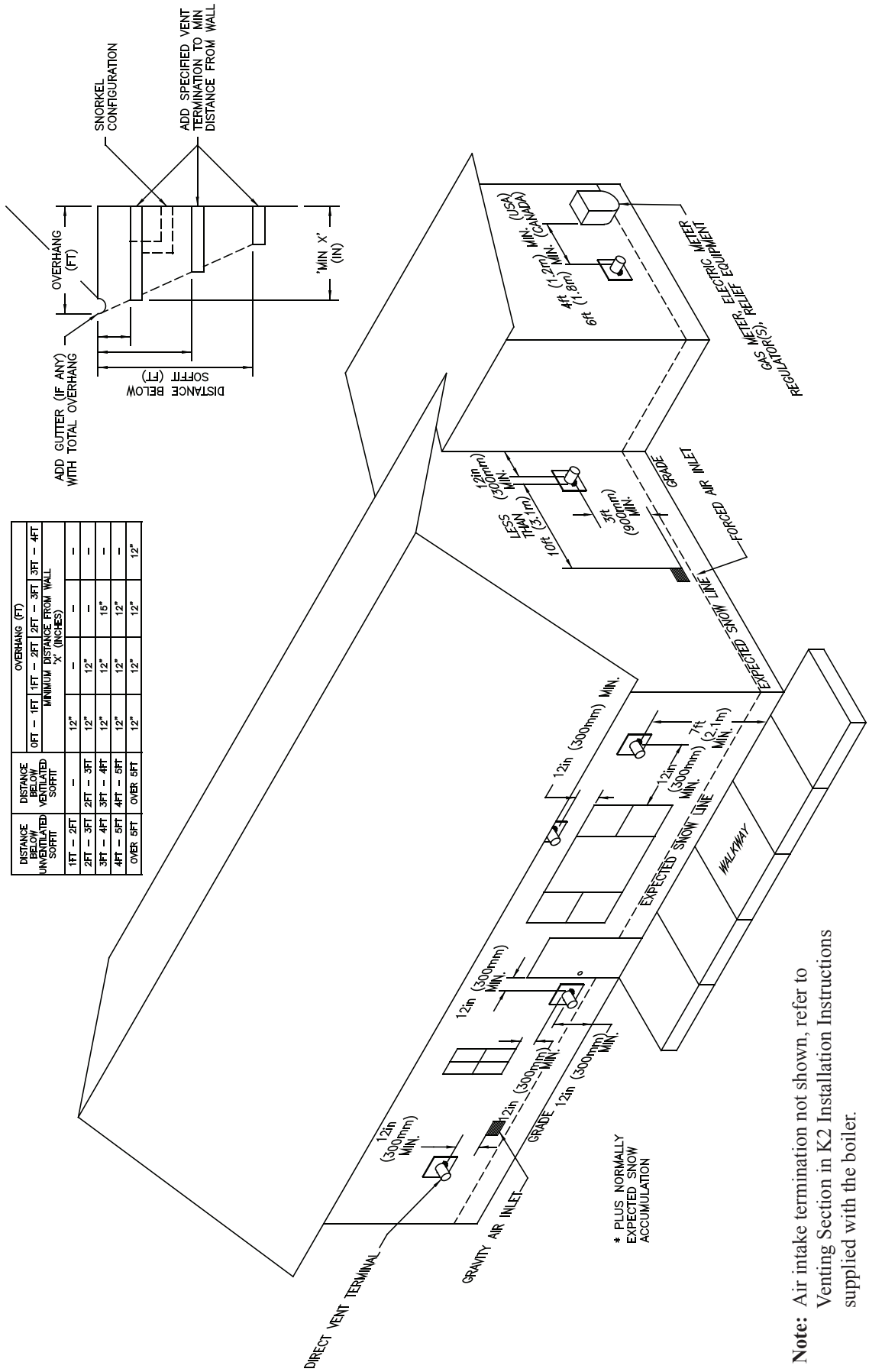

DISTANCE BELOW UNVENTILATED SOFFIT	DISTANCE BELOW VENTILATED SOFFIT	OVERHANG (FT)				
		0FT – 1FT	1FT – 2FT	2FT – 3FT	3FT – 4FT	
		MINIMUM DISTANCE FROM WALL 'X' (INCHES)				
1FT – 2FT	–	12"	–	–	–	
2FT – 3FT	2FT – 3FT	12"	12"	–	–	
3FT – 4FT	3FT – 4FT	12"	12"	15"	–	
4FT – 5FT	4FT – 5FT	12"	12"	12"	–	
OVER 5FT	OVER 5FT	12"	12"	12"	12"	

Note: Air intake termination not shown, refer to Venting Section in K2 Installation Instructions supplied with the boiler.

Figure 7.11: Location of Vent Terminal Relative to Windows, Doors, Grades, Overhangs, Meters and Forced Air Inlets - Two-Pipe System Vent Terminal (Shown) Two-Pipe System Air Intake Terminal (Not Shown)

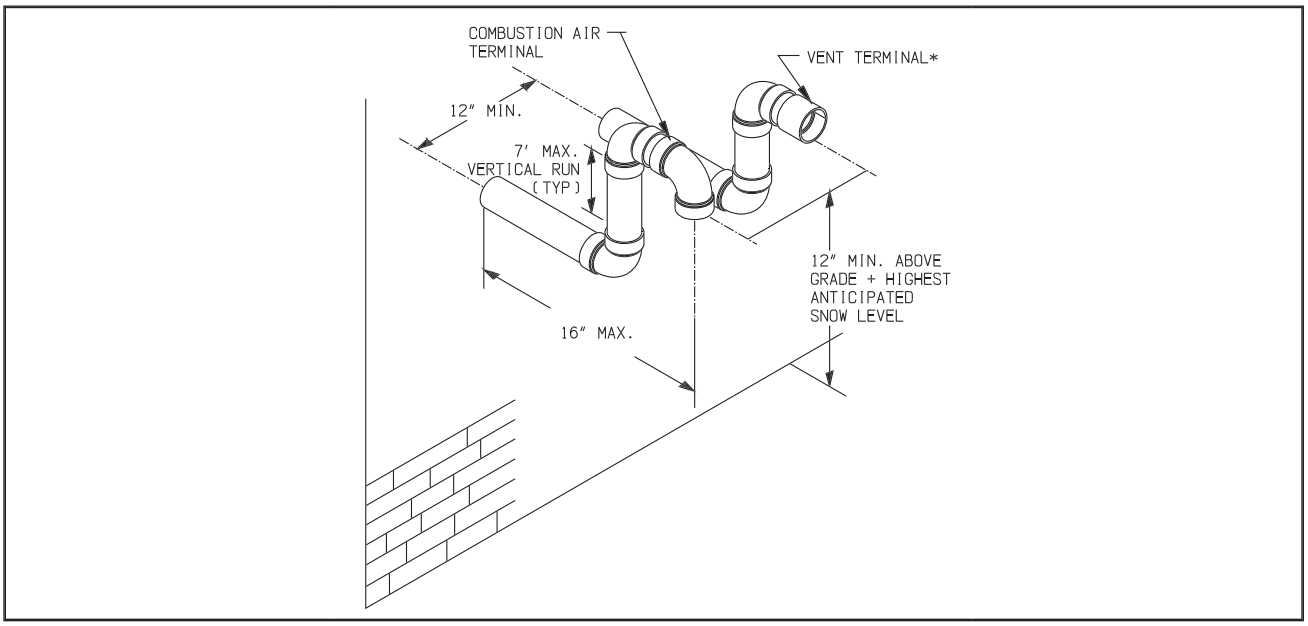

Figure 7.12: Snorkel Terminal Configuration (CPVC/PVC Vent Systems Only)

C. Design Requirements Unique to Vertical Venting Systems

Table 7.13a summarizes all vertical twin pipe vent options. Table 7.13.b summarizes vent options in which an abandoned B-vent chimney is used both as a chase for the vent pipe and as a conduit for combustion air.

In addition to the requirements in Part VII-A, observe the following design requirements:

1. Permitted Terminals for Vertical Venting

Terminal Option H: Fittings (Acceptable for Vent Options 10-17) – Vent terminates in a plain end (coupling for PVC, bell end for PolyPro, Polyflue and plain end pipe for InnoFlue). Intake terminates in a PVC 180 elbow pointing down (two sweep 90's may be substituted). Observe the clearances from the roof, and normal snow line on the roof, shown in Figures 7.15 and 7.17. The section of PolyPro, Polyflue or InnoFlue exposed to the outdoors must be UV resistant.

Use of rodent screens is generally recommended for both terminations. Two rodent screens suitable for 3" PVC terminals are supplied with the boiler and are installed as shown in Figure 7.29. If 2" CPVC is used, these screens can be cut to fit into the smaller fittings. Rodent screens ("bird guards") for PolyPro, Polyflue and InnoFlue are as follows:

Size/Vent System	Rodent Screen ("Bird Guard")
2" PolyPro	DuraVent # 2PPS-BG
3" PolyPro	DuraVent # 3PPS-BG
2" Polyflue	Selkirk # 2PF-HVST
3" Polyflue	Selkirk # 3PV-HVST
2" InnoFlue	Centrotherm # IASPP02
3" InnoFlue	Centrotherm # IASPP03

Terminal Option I: Ipex FGV Concentric Terminal (Acceptable for Vent Options 10 & 11) - This terminal is shown in Figure 7.16 and may be used with CPVC/PVC vent systems. Use a compatible roof flashing and storm collar in accordance with the Ipex instructions for this terminal. This terminal is available in various lengths and in both PVC and CPVC. Terminals acceptable for use with these vent options are as follows:

Ipex PN	FGV Concentric Terminal Description
196005	2 x 16" PVC
196105	2 x 28" PVC
196125	2 x 40" PVC
196006	3 x 20" PVC
196106	3 x 32" PVC
196116	3 x 44" PVC
197107	3 x 32" CPVC
197117	3 x 44" CPVC

See Part VII-E of this manual and the Ipex instructions provided with the terminal, for installation details.

Table 7.13a: Summary of Vertical Twin Pipe Venting Options

Option		10	11	12	13	14	15	16	17
Illustrated in Figure		7.15, 717	7.15, 7.17	7.17, 7.18	7.17, 7.18	7.17	7.17	7.17	7.17
Pipe Penetration through Structure	Vent	Roof	Roof	Roof	Roof	Roof	Roof	Roof	Roof
	Intake	Roof	Roof	Roof	Roof	Roof	Roof	Roof	Roof
Material	Vent	CPVC/ PVC (Note 2)	CPVC/ PVC (Note 2)	DuraVent PolyPro (Rigid)	DuraVent PolyPro (Rigid)	Selkirk Polyflue	Selkirk Polyflue	Centro-therm InnoFlue SW	Centro-therm InnoFlue SW
	Intake	PVC	PVC	PVC	PVC	PVC	PVC	PVC	PVC
Nominal Diameter	Vent	2”	3”	2”	3”	2”	3”	2”	3”
	Intake	2”	3”	2”	3”	2”	3”	2”	3”
Min Equivalent Vent Length:									
Models	K2-080	12”	12”	12”	12”	12”	12”	12”	12”
	K2-100	12”	12”	12”	12”	12”	12”	12”	12”
	K2-120	Not Permitted	12”	Not Permitted	12”	Not Permitted	12”	Not Permitted	12”
	K2-150		52”		52”		52”		52”
	K2-180		52”		52”		52”		52”
Max Equivalent Vent Length (Note 1):									
Models	K2-080	60ft	135ft	60ft	135ft	60ft	135ft	60ft	135ft
	K2-100	60ft	135ft	60ft	135ft	60ft	135ft	60ft	135ft
	K2-120	Not Permitted	135ft	Not Permitted	135ft	Not Permitted	135ft	Not Permitted	135ft
	K2-150		135ft		135ft		135ft		135ft
	K2-180		135ft		135ft		135ft		135ft
Terminal Option H (Fittings)	Vent	Coupling w/Screen	Coupling w/Screen	2PPS-12B or 2PPS-36B w/Screen	3PPS-12B or 3PPS-36B w/Screen	2PF-10UV or 2PF-39UV w/Screen	3PF-10UV or 3PF-39UV w/Screen	ISEP02 or ISEP0239 w/Screen	ISEP03 or ISEP0339 w/Screen
	Intake	180 Elbow w/Screen	180 Elbow w/Screen	180 Elbow w/Screen	180 Elbow w/Screen	180 Elbow w/Screen	180 Elbow w/Screen	180 Elbow w/Screen	180 Elbow w/Screen
Terminal Option I (Ipex FGV Concentric)		Ipex 196105 (Note 3)	Ipex 196006 (Note 3)	Not Permitted	Not Permitted	Not Permitted	Not Permitted	Not Permitted	Not Permitted
Terminal Option J (DiversiTech CVENT Concentric)		CVENT-2	CVENT-3	Not Permitted	Not Permitted	Not Permitted	Not Permitted	Not Permitted	Not Permitted
Terminal Option K (DuraVent Vertical Concentric)		Not Permitted	Not Permitted	2PPS-VK	3PPS-VK	Not Permitted	Not Permitted	Not Permitted	Not Permitted

Notes:

1. Max vent lengths shown also apply to the intake. For example, Vent Option #1 may have up to 60ft of vent pipe and also up to 60 ft of i intake pipe.
2. First 30” of vent and vent Elbow connected to boiler must be CPVC. Downstream vent pipe can be PVC except as noted in text.
3. Ipex FGV Concentric Terminal available in various lengths and also CPVC (see text).

All vertical terminals require compatible roof flashing and storm collars.

Table 7.13b: Summary of Vertical "B-Vent Air Chase" Vent Options (B-Vent Chase MUST Be Sealed)

Option		18	19	20	21
Illustrated in Figure		7.19	7.19	7.20	7.20
Pipe Penetration Through Structure	Vent	Roof	Roof	Roof	Roof
	Intake	Roof	Roof	Roof	Roof
Material	Vent	DuraVent PolyPro (Rigid/ Flex)	DuraVent PolyPro (Rigid/ Flex)	Centrotherm InnoFlue SW/ Flex	Centrotherm InnoFlue SW/Flex
	Intake	B Vent/PVC	B Vent/PVC	B Vent/PVC	B Vent/PVC
Nominal Diameter	Vent	2"	3"	2"	3"
	Intake	2" or 3"	3"	2" or 3"	3"
	Min B Vent ID	5"	6"	5"	6"
Min Equivalent Vent Length:					
Models	K2-080	36"	36"	36"	36"
	K2-100	36"	36"	36"	36"
	K2-120	Not Permitted	36"	Not Permitted	36"
	K2-150		52"		52"
	K2-180		52"		52"
Max Equivalent Vent Length (Note 1):					
Models	K2-080	60ft	135ft	60ft	135ft
	K2-100	60ft	135ft	60ft	135ft
	K2-120	Not Permitted	135ft	Not Permitted	135ft
	K2-150		135ft		135ft
	K2-180		135ft		135ft
Vent Manufacturer's PN for Flex Termination/Components Required		2PPS-VFT 2PPS-BV* 2PPS-FLEX**	3PPS-VFT 3PPS-BV* 3PPS-FLEX**	IFBK02**** IAWP02B	IFBK03**** IAWP03B

* Specify size of B vent (e.g. 2PPS-BV**6** is for use with 6" B vent)
** Specify length in feet.
**** Specify Flex length and B-vent diameter (e.g. IFBK02**2505** includes 25ft of flex and used with 5" B vent)

Note 1: Max vent lengths shown also apply to the intake. Flex vent reduces the maximum allowable vent length. See equivalent lengths for flex vent shown in Table 7.14 and sizing example on page 31.

NOTICE

Vertical venting and combustion air roof penetrations (where applicable) require the use of roof flashing and storm collar, which are not supplied with the boiler, to prevent moisture from entering the structure.

Terminal Option J: DiversiTech Concentric Terminal (Acceptable for Vent Options 10 & 11) - This terminal is shown in Figure 7.16 and may be used with CPVC/PVC vent systems. See Part VII-E of this manual and the DiversiTech instructions provided with the terminal, for installation details.

Terminal Option K: DuraVent PolyPro Concentric Terminal (Acceptable for Vent Options 12, 13) - This terminal is shown in Figure 7.18 and may be used with DuraVent 2" or 3" PolyPro vent systems. Use a compatible DuraVent roof flashing and storm collar in accordance with the DuraVent instructions for this terminal See Part VII-F of this manual and the DuraVent instructions provided with the terminal, for installation details.

2. Vertical Vent and Air Intake Location – Observe the following clearances from roof mounted terminals:

- Bottom of air intake opening must be at least 12" above the normal snow line anticipated on the roof.
- Exhaust opening must be at least 2ft above any portion of the roof or structure located within horizontally within 10ft.
- For terminal option H, maintain at least 12" of vertical separation between the exhaust and intake opening as shown in Figure 7.15 and 7.17.

3. Requirements for B-Vent Air Chase Options – Observe the following additional requirements when using an abandoned B-vent chimney as an air chase as described in Options #18-21. Also refer to Figures 7.19 & 7.20.

- B vent must be clean and in good condition.
- Use of flex Polypropylene outside of B-vent chimney is not permitted.
- All joints and seams in the B-vent must be sealed with RTV. If these seams are not accessible, vent options 18-21 cannot be used while complying with the National Fuel Gas Code (as an alternative, the B-vent chimney can be used as a chase for the vent pipe while combustion air is piped from an outside wall - see Part VII-D for additional details).
- All venting is Polypropylene supplied by the vent manufacturer shown in Table 7.13b. The portion of this venting within the B–vent is flexible.
- All flex pipe must be installed vertically. Up to two offsets (four bends) may be made in the vertical run of flex pipe. Bends used to make these offsets may not exceed 45 degrees.
- Because the flex pipe is corrugated, it has a higher pressure drop than the rigid pipe used elsewhere in the vent system. Equivalent lengths for flex venting are shown in Table 7.14. Reduce the maximum allowable vent length shown in Table 7.13b by this equivalent length for each foot of flex pipe used, as well as for each elbow in addition to the first. The termination is not counted. If offsets (described above) are present, the equivalent length of the bends in these offsets can also be ignored.

Example: A 100MBH model is to be installed as using Vent Option 18 as shown in Figure 7.19. The following components are used:

Vent:
2" DuraVent Poly-Pro (Rigid) – 4ft
2" DuraVent Poly-Pro Flex – 20ft
Poly-Pro elbows – 2
DuraVent 2PPS-VFT Terminal (exhaust side)

Intake:
2" PVC – 6ft
2" PVC Sweep 90 – 3
Turn in B vent Tee
Straight B-vent (5" or larger) containing flex vent – 20ft
DuraVent 2PPS-VFT Terminal (intake side)

Vent Equivalent length – First elbow is ignored. The terminal is also ignored. From Table 7.14, the equivalent length of 2" DuraVent Poly-Pro Flex is 2.0ft. From Table 7.1 the equivalent length of the second 90 elbow is 4.5ft. The equivalent length of the vent system is therefore:

4 + 4.5 + (20 x 2.0) = 48.5ft.

Since Vent Option 18 shows a max vent length of 60ft, the planned vent length of OK.

Intake Equivalent length - First elbow and the turn in the B vent tee are ignored, leaving two sweep 90 elbows that must be counted. From Table 7.1, the equivalent length of each of these elbows is 2.6ft. From Table 7.14 the equivalent length of the B vent containing flex is 1.0ft. Equivalent length of the intake system is therefore:

(2 x 2.6) +6 +(20 x 1.0) = 31.2ft.

Since this is less than 60ft, the planned intake length is OK.

Table 7.14: Equivalent Length of Flex Pipe

	Equivalent Length (ft)
Flex Vent (1 ft):	
2” DuraVent PolyPro Flex	2.0 ft
2” Centrotherm InnoFlue Flex	2.0 ft
2” Selkirk Polyflue	2.0 ft
3” DuraVent PolyPro Flex	2.0 ft
3” Centrotherm InnoFlue Flex	2.3 ft
3” Selkirk Polyflue	2.3 ft
B-Vent Air Chase (1ft):	
2” Flex Vent in 5” (or larger) B-Vent	1.0 ft
3” Flex Vent in 6” (or larger) B-Vent	1.0 ft

Note: Up to four 45 degree bends may be made in flex pipe or air chase.
These bends are not counted when figuring equivalent length.

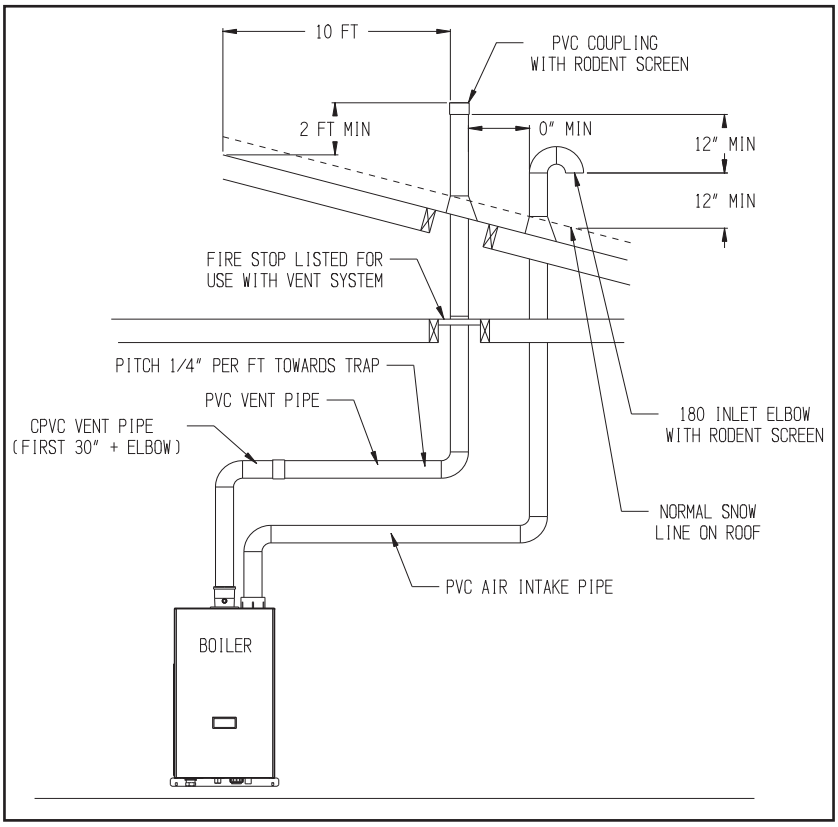

Figure 7.15: Vertical CPVC/PVC Venting (Vent Options 10 & 11, Terminal Option H)

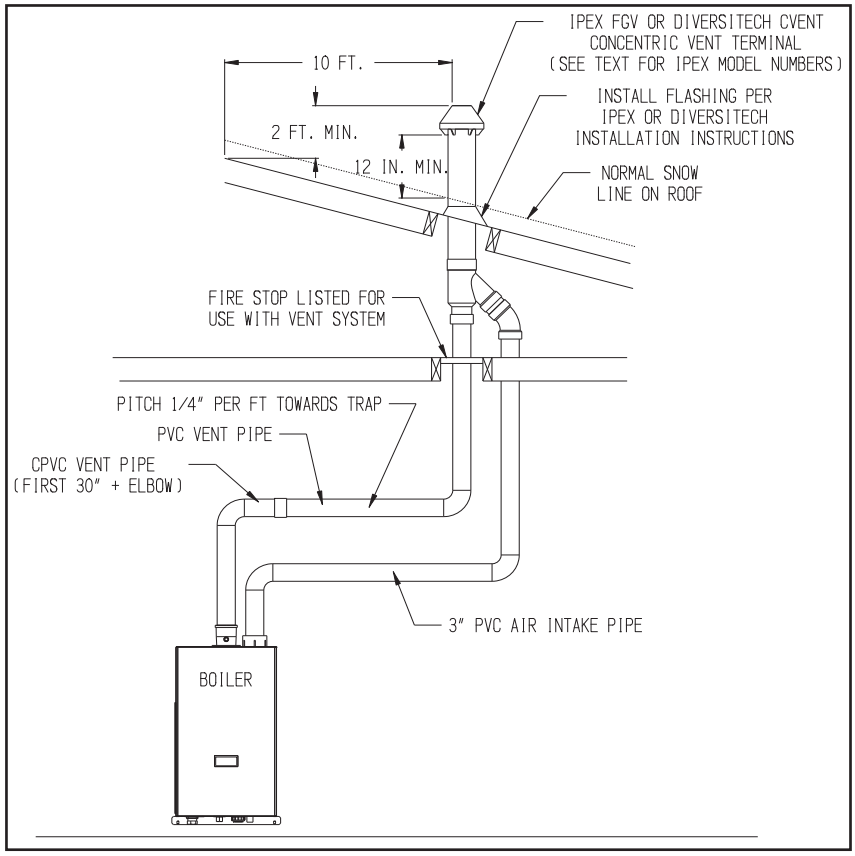

Figure 7.16: Vertical CPVC/PVC Venting with IPEX Concentric Vent Terminal (Vent Options #10 & 11, Terminal Option I, J)

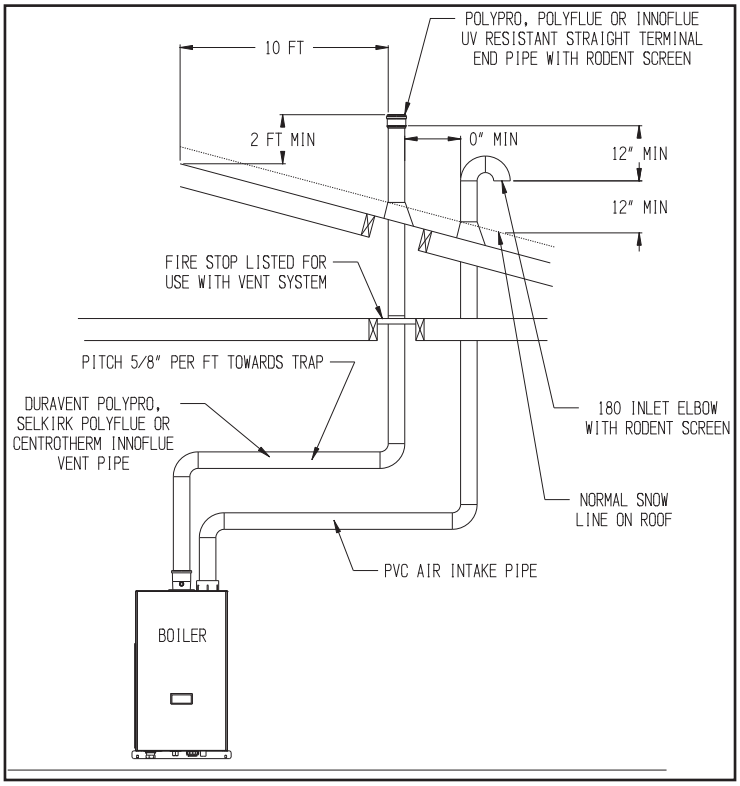

Figure 7.17: Duravent PolyPro, Selkirk Polyflue or Centrotherm InnoFlue Vertical Single Wall PP Venting (Vent Options #12-17, Terminal Option H)

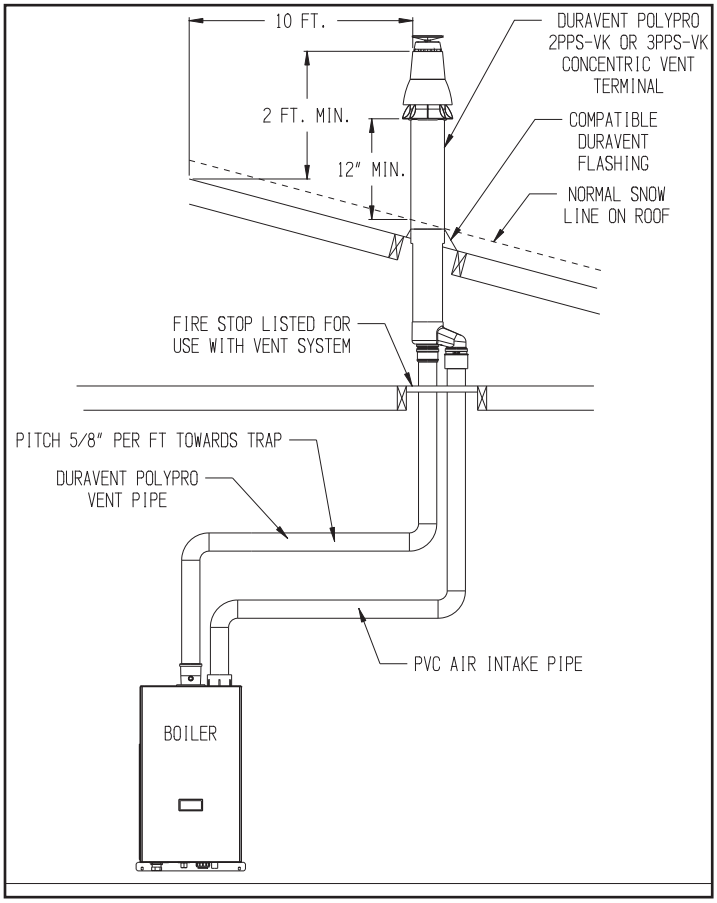

Figure 7.18: Duravent PolyPro Vertical Venting with Concentric Terminal (Vent Options #12 & 13, Terminal Option J)

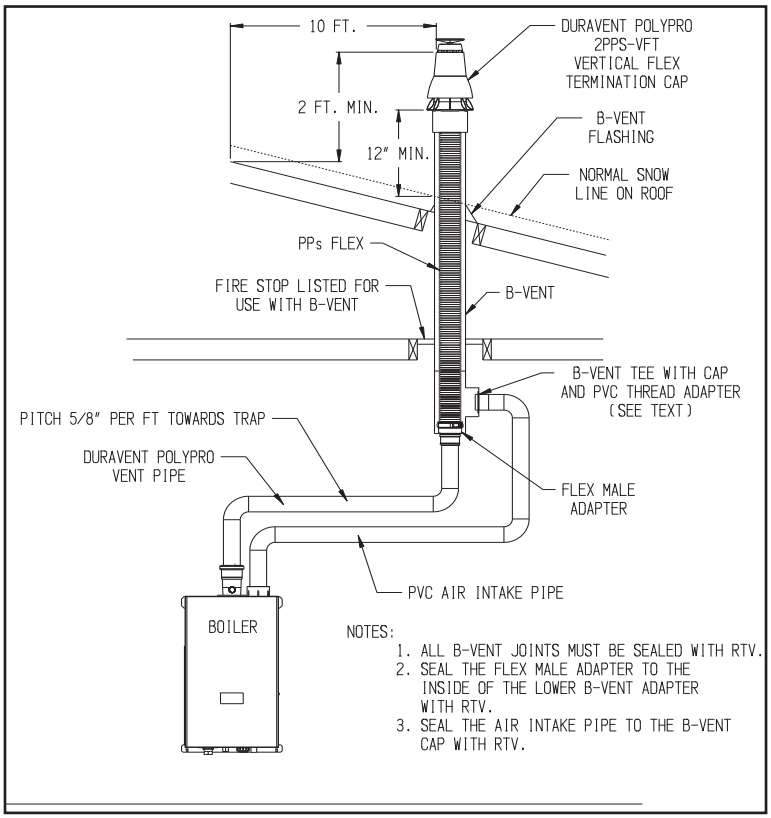

Figure 7.19: Duravent PolyPro B-Vent Air Chase System (Vent Options #18 & 19)

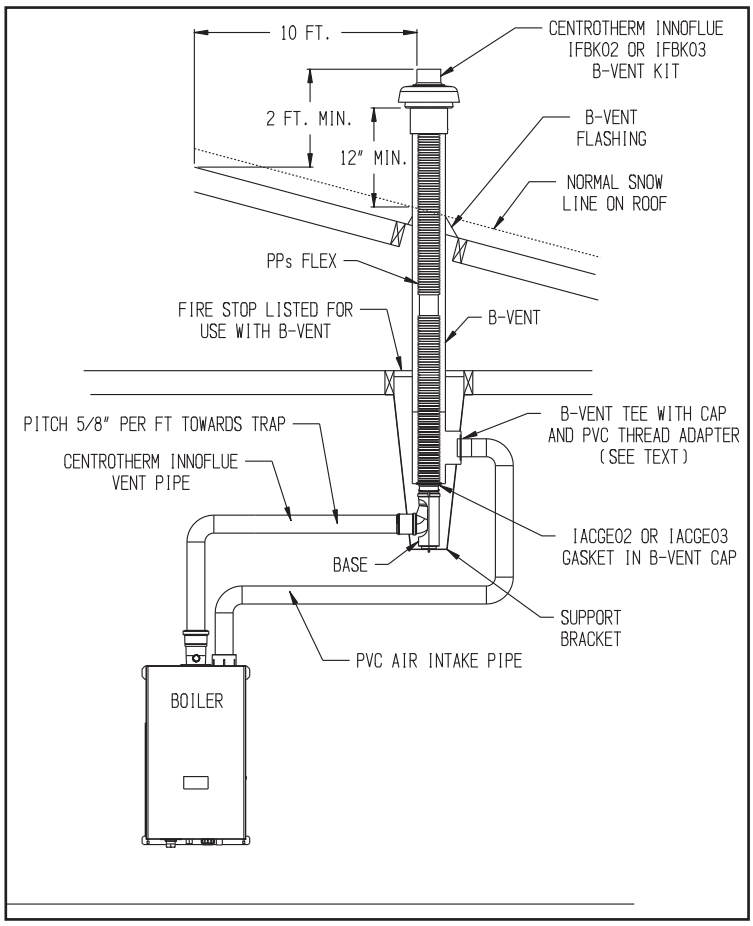

Figure 7.20: Centrotherm InnoFlue B-Vent Air Chase System (Vent Options #20 & 21)

D. Design Requirements Unique to Split Vent Systems

Table 7.21 summarizes all split vent options. Illustrations of split vent systems are shown in Figures 7.22, 7.23, and 7.24. In addition to the requirements in Part VII-A, observe the following design requirements:

1. Permitted Terminals for Split Venting:

   Rigid Vent Systems (Vent Options 25-32) – Vent terminates in a plain end (coupling for PVC, bell end for PolyPro, Polyflue, and plain end pipe for InnoFlue). Intake terminates in a PVC 90 sweep elbow pointing down. The section of PolyPro, Polyflue or InnoFlue exposed to the outdoors must be UV resistant.

   Use of a rodent screen is generally recommended for the vent termination. A rodent screen suitable for 3" PVC terminals is supplied with the boiler and is installed under the termination coupling as shown in Figure 7.28. If 2" CPVC is used, this screen can be cut to fit into the smaller fitting. Rodent screens ("bird guards") for PolyPro, Polyflue and InnoFlue are as follows:

Size/Vent System	Rodent Screen ("Bird Guard")
2" PolyPro	DuraVent # 2PPS-BG
3" PolyPro	DuraVent # 3PPS-BG
2" Polyflue	Selkirk #2PF-HVST
3" Polyflue	Selkirk #3PF-HVST
2" InnoFlue	Centrotherm # IASPP02
3" InnoFlue	Centrotherm # IASPP03

   Flex Vent Terminals (Options 33-38) – The flex vent kits shown for options 33-38 include vent terminals that must be installed in accordance with the vent manufacturer's instructions. Different terminals are used for Masonry and B-vent chimney chases.

   Air Intake Terminals (Vent Options 25-38) - All split venting options shown in Tables 7.21 terminate in a PVC 90 sweep elbow pointing down. Use of a rodent screen is generally recommended for the intake termination. A rodent screen suitable for 3" PVC terminals is supplied with the boiler and is installed under the intake termination elbow coupling as shown in Figure 7.28. If 2" CPVC is used, this screen can be cut to fit into the smaller fitting.

2. Vent Terminal Location – Observe the following clearances from roof mounted vent terminals (also see Figures 7.22, 7.23, or 7.24):

   - Bottom of terminal must be at least 12" above the normal snow line anticipated on the roof.
   - Exhaust opening must be at least 2ft above any portion of the roof or structure located within horizontally within 10ft.

3. Horizontal Air Intake Terminal Location - Observe the following limitations on the intake terminal location (also see Figures 7.22, 7.23, or 7.24):

   - The bottom of all terminals must be at least 12" above the normal snow line. In no case should they be less than 12" above grade level.
   - If possible, install the intake terminal on a wall away from the prevailing wind. Reliable operation of this boiler cannot be guaranteed if the intake terminal is subjected to winds in excess of 40 mph.
   - Air intake terminal must not terminate in areas that might contain combustion air contaminates, such as near swimming pools. See WARNING on page 15.

4. Use of abandoned chimneys as a vent chase (Options 33-38) – Vent options 33-38 permit flexible Polypropylene venting to be routed to the roof using an abandoned masonry or B- vent chimney. In these applications combustion air is drawn horizontally from a wall terminal. See Figure 7.23 or 7.24. When using one of these vent options, observe the following requirements:

   - When a masonry chimney containing multiple flues is used as a chase, ALL flues must be abandoned (Figure 7.26).
   - Masonry or B vent chimney used as a chase must be structurally sound.
   - Use of flex Polypropylene outside of a masonry or B-vent chimney is not permitted unless allowed by the vent manufacturer and permitted by local codes.
   - All venting is Polypropylene supplied by the vent manufacturer shown in Table 7.21. The portion of this venting within the masonry or B–vent chimney is flexible.
   - All flex pipe must be installed vertically. Up to two offsets (four bends) may be made in the vertical run of flex pipe. Bends used to make these offsets may not exceed 45 degrees (Figure 7.25).
   - Because the flex pipe is corrugated, it has a higher pressure drop than the rigid pipe used elsewhere in the vent system. Equivalent lengths for flex venting are shown in Table 7.14. Reduce the maximum allowable vent length shown in Table 7.21 by this equivalent length for each foot of flex pipe used, as well as for each elbow in addition to the first. The first elbow and termination are not counted. If offsets (described above) are present, the equivalent length of the bends in these offsets can also be ignored.

Example: A 100MBH model is to be installed as using Vent Option 34 in a masonry chimney as shown in Figure 7.23. The following components are used:

Vent:
3" DuraVent Poly-Pro (Rigid) – 4ft
3" DuraVent Poly-Pro Flex – 30ft
Poly-Pro elbows – 2 (one at base of chimney and one above boiler)
DuraVent 3PPS-FK Terminal

Intake:
3" PVC – 6ft
3" PVC Sweep 90 – 2 (one above the boiler and one as an intake terminal)

Vent Equivalent length – First elbow is ignored. The terminal is also ignored. From Table 7.14, the equivalent length of 3" DuraVent Poly-Pro Flex is 2.0ft. From Table 7.1 the equivalent length of the second 90 elbow is 8.7ft. The equivalent length of the vent system is therefore:

4 + 8.7 + (30 x 2.0) = 72.7ft.

Since Vent Option 34 shows a max vent length of 135ft, the planned vent length of OK.

Intake Equivalent length - First elbow and termination elbow are ignored, leaving just the straight pipe. Equivalent length of the intake system is therefore 6ft. Since this is less than 135ft, the planned intake length is OK.

WARNING

- **Flex Vent Options may only be used in unused chimneys..**
- **When a Masonry chimney is used as a chase, ALL flues in that chimney must be unused.**

Failure to observe the above requirements could cause flue gas to enter the building, resulting in severe property damage, personal injury or loss of life.

THIS PAGE LEFT BLANK INTENTIONALLY

Table 7.21: Summary of Split Vent System Options

Option #		**25**	**26**	**27**	**28**	**29**	**30**
Illustrated in Figure		7.22	7.22	7.22	7.22	7.22	7.22
Pipe Penetration Through Structure	Vent	Roof	Roof	Roof	Roof	Roof	Roof
	Intake	Wall	Wall	Wall	Wall	Wall	Wall
Material	Vent	CPVC/PVC (Note 2)	CPVC/PVC (Note 2)	DuraVent PolyPro (Rigid)	DuraVent PolyPro (Rigid)	Selkirk Polyflue	Selkirk Polyflue
	Intake	PVC	PVC	PVC	PVC	PVC	PVC
Nominal Diameter	Vent	2”	3”	2”	3”	2”	3”
	Intake	2” or 3”	3”	2” or 3”	3”	2” or 3”	3”
Min Equivalent Vent Length:							
Models	K2-080	48”	48”	48”	48”	48”	48”
	K2-100	48”	48”	48”	48”	48”	48”
	K2-120		48”		48”		48”
	K2-150		52”		52”		52”
	K2-180		52”		52”		52”
Max Equivalent Vent Length (Note 1):							
Models	K2-080	60ft	135ft	60ft	135ft	60ft	135ft
	K2-100	60ft	135ft	60ft	135ft	60ft	135ft
	K2-120		135ft		135ft		135ft
	K2-150		135ft		135ft		135ft
	K2-180		135ft		135ft		135ft
Rigid Vent Terminals	Vent	Coupling w/Screen	Coupling w/Screen	2PPS-12B or 2PPS-36B w/Screen	3PPS-12B or 3PPS-36B w/Screen	2PF-10UV or 2PF-39UV w/Screen	3PF-10UV or 3PF-39UV w/Screen
	Intake	90 Elbow w/Screen	90 Elbow w/Screen	90 Elbow w/Screen	90 Elbow w/Screen	90 Elbow w/Screen	90 Elbow w/Screen
Flex Termination & Components (Masonry Chimney Chase) (Note 3)	Vent						
	Intake						
Flex Termination & Components (B-Vent Chimney Chase)	Vent						
	Intake						

Note 1: Max vent lengths shown also apply to the intake. Flex vent reduces the maximum allowable vent length. See equivalent lengths for flex vent shown in Table 7.14 and sizing example on page 31.
Note 2: First 30” plus first exhaust elbow are CPVC.
Note 3: If masonry chimney contains flues in addition to that being used for chase, **ALL** must be unused.
Note 4: See Polyflue installation manual for gaskets, spacers and other required vent components.

All vertical terminals require compatible roof flashing and storm collars.

Table 7.21: Summary of Split Vent System Options (cont.)

31	32	33	34	35	36	37	38
7.22	7.22	7.23, 7.24	7.23, 7.24	7.23, 7.24	7.23, 7.24	7.23, 7.24	7.23, 7.24
Roof	Roof	Roof	Roof	Roof	Roof	Roof	Roof
Wall	Wall	Wall	Wall	Wall	Wall	Wall	Wall
Centrotherm InnoFlue SW	Centrotherm InnoFlue SW	DuraVent PolyPro (Rigid/Flex)	DuraVent PolyPro (Rigid/Flex)	Selkirk Polyflue (Rigid/Flex)	Selkirk Polyflue (Rigid/Flex)	Centrotherm InnoFlue (Rigid/Flex)	Centrotherm InnoFlue (Rigid/Flex)
PVC	PVC	PVC	PVC	PVC	PVC	PVC	PVC
2”	3”	2”	3”	2”	3”	2”	3”
2” or 3”	3”	2” or 3”	3”	2” or 3”	3”	2” or 3”	3”
Min Equivalent Vent Length:							
48”	48”	48”	48”	48”	48”	48”	48”
48”	48”	48”	48”	48”	48”	48”	48”
	48”		48”		48”		48”
	52”		52”		52”		52”
	52”		52”		52”		52”
Max Equivalent Vent Length (Note 1):							
60ft	135ft	60ft	135ft	60ft	135ft	60ft	135ft
60ft	135ft	60ft	135ft	60ft	135ft	60ft	135ft
	135ft		135ft		135ft		135ft
	135ft		135ft		135ft		135ft
	135ft		135ft		135ft		135ft
ISEP02 or ISEP0239 w/ Screen	ISEP03 or ISEP0339 w/Screen						
90 Elbow w/ Screen	90 Elbow w/ Screen						
		2PPS-FK 2PPS-FLEX**	3PPS-FK 3PPS-FLEX**	2PF-FLEX-KIT 2PF-FLEX	3PF-FLEX-KIT 3PF-FLEX	IFCK02**	IFCK03**
		90 Elbow w/Screen	90 Elbow w/Screen	90 Elbow w/Screen	90 Elbow w/Screen	90 Elbow w/Screen	90 Elbow w/Screen
		2PPS-VFT 2PPS-BF* 2PPS-FLEX**	3PPS-VFT 3PPS-BF* 3PPS-FLEX**	2PF-10UV or 2PF-39UV w/Screen 2PF-BVSC (Note 4)	3PF-10UV or 3PF-39UV w/Screen 3PF-BVSC (Note 4)	IFBK02****	IFBK03****
		90 Elbow w/Screen	90 Elbow w/Screen	90 Elbow w/Screen	90 Elbow w/Screen	90 Elbow w/Screen	90 Elbow w/Screen

* Specify size of B vent (e.g. 2PPS-BV**6** is for use with 6” B vent).
** Specify length in feet.
**** Specify Flex length and B vent diameter (e.g. IFBK02**2505** includes 25ft of flex and used with 5” B vent).

Note 1: Max vent lengths shown also apply to the intake. Flex vent reduces the maximum allowable vent length. See equivalent lengths for flex vent shown in Table 7.14 and sizing example on page 31.
Note 2: First 30” plus first exhaust elbow are CPVC.
Note 3: If masonry chimney contains flues in addition to that being used for chase, **ALL** must be unused.
Note 4: See Polyflue installation manual for gaskets, spacers and other required vent components

All vertical terminals require compatible roof flashing and storm collars.

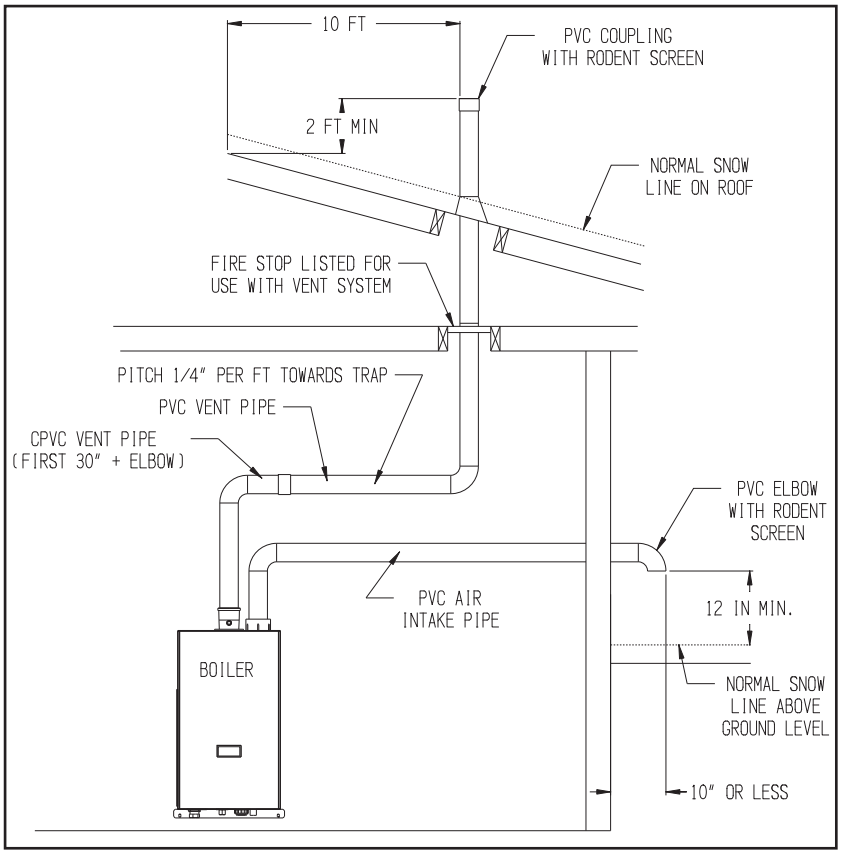

Figure 7.22: Split Rigid Vent System (Vent Options 25-32)

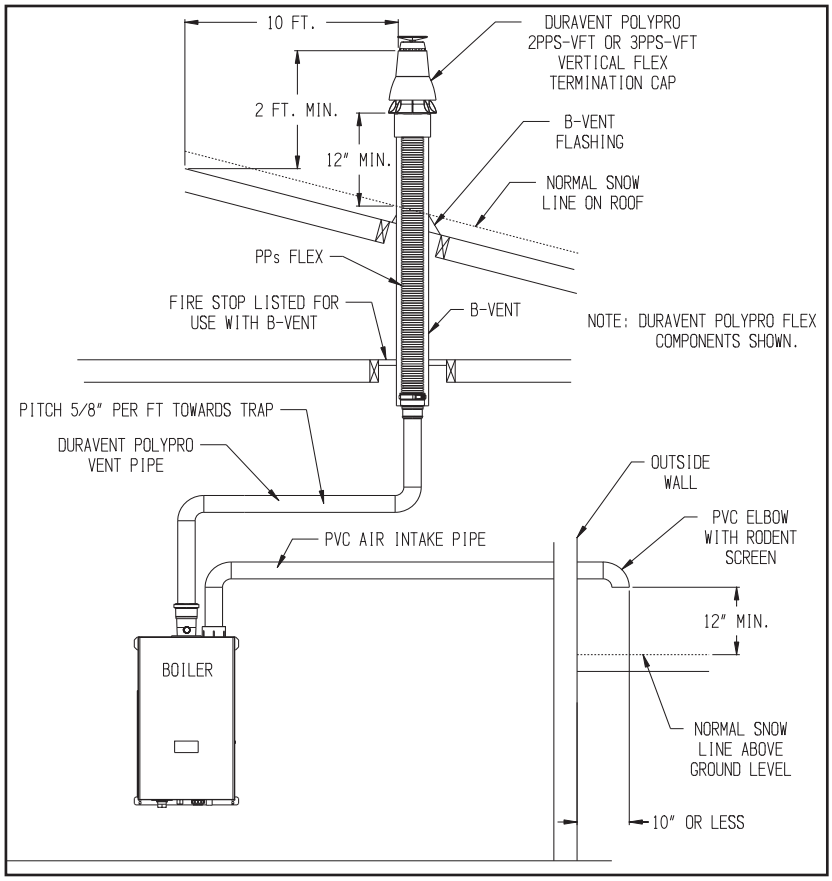

Figure 7.23: Split Vent System (Flex in B-Vent Chase) Vent Options 33-38)

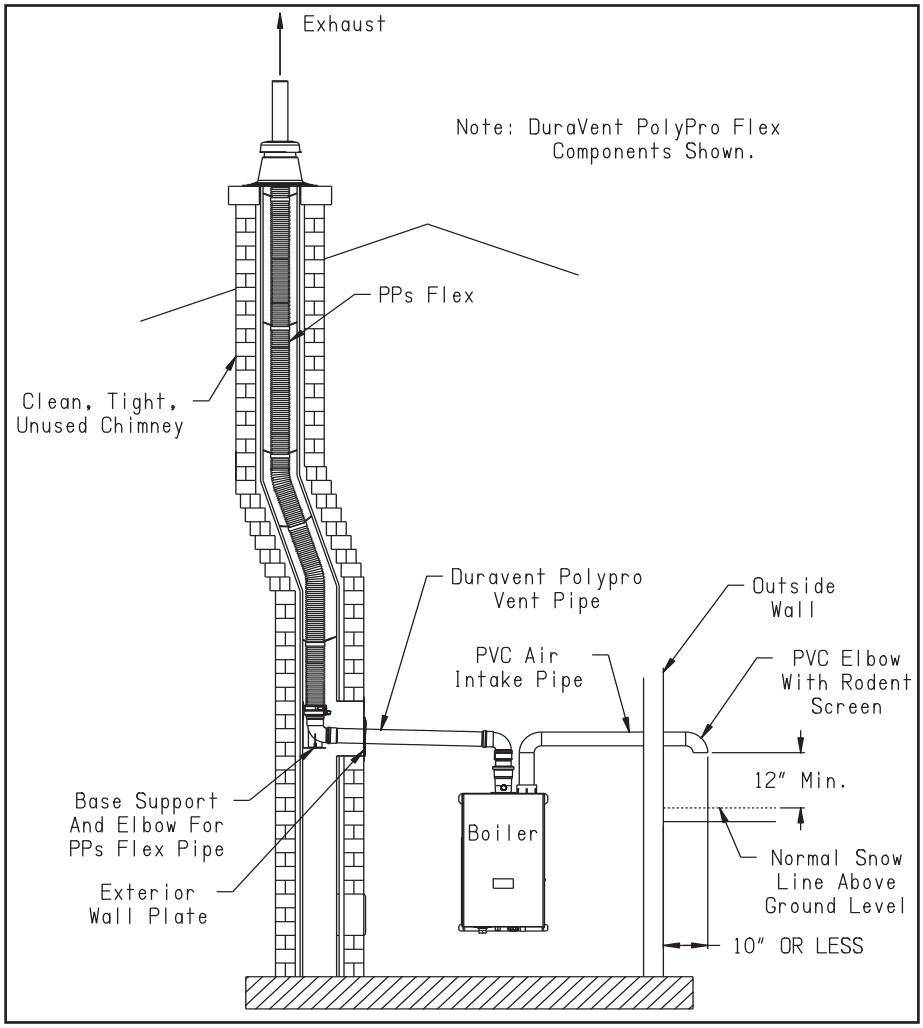

Figure 7.24: Split Vent System (Flex in Abandoned Masonry Chimney) (Vent Options 33-38)

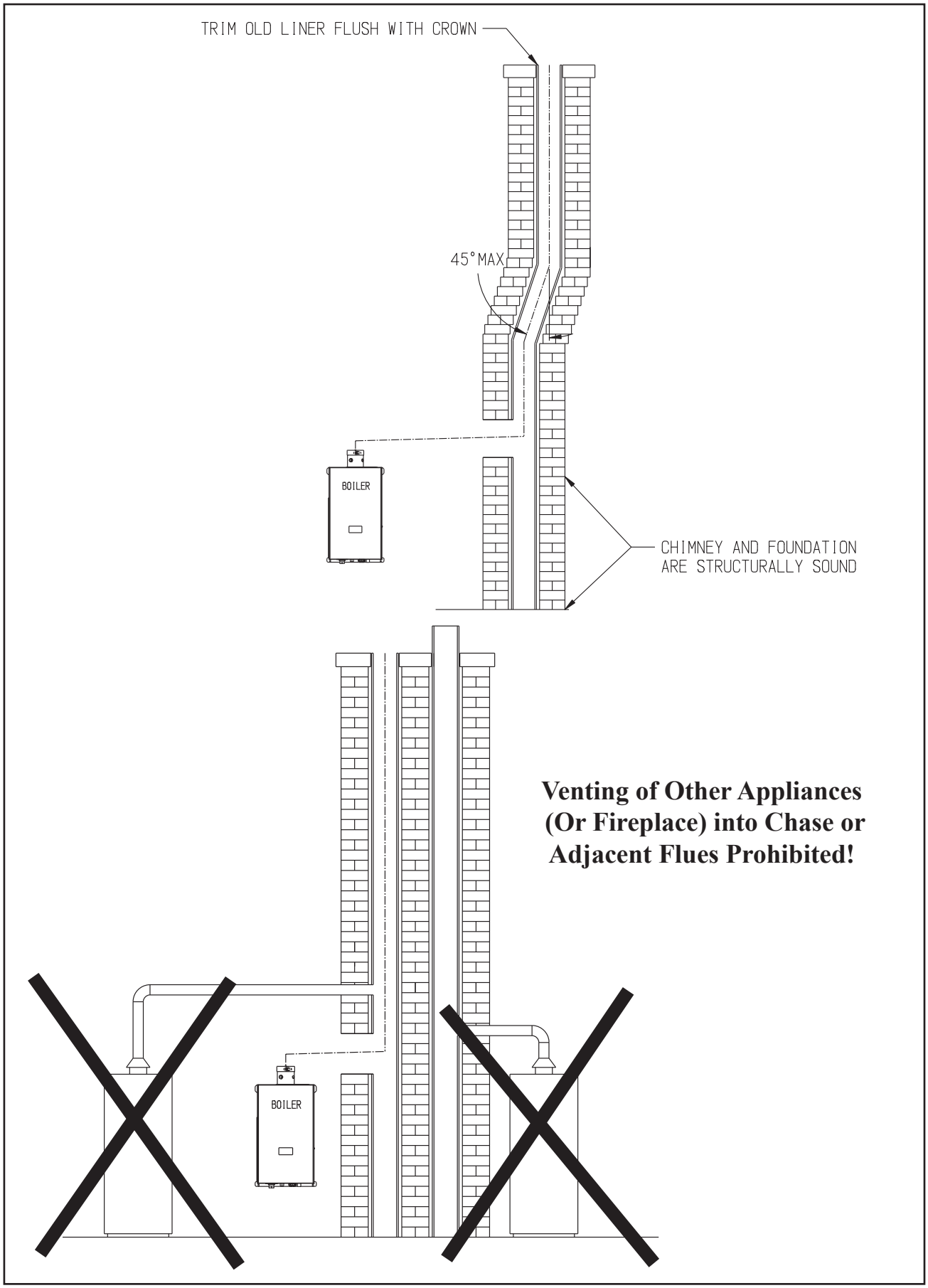

Figure 7.25: Masonry Chimney Chase Requirements

E. Assembly of CPVC/PVC Vent Systems

WARNING

Asphyxiation Hazard. Failure to follow these instructions could cause products of combustion to enter the building, resulting in severe property damage, personal injury or death.

Use all CPVC vent components (supplied with the boiler) for near-boiler vent piping before transitioning to Schedule 40 PVC pipe (ASTM 2665) components for remainder of vent system.

Use CPVC vent components within any interior space where air cannot circulate freely, including through vertical or horizontal chase ways, inside a stud wall, in closets and through wall penetrations.

The use of cellular core PVC (ASTM F891), cellular core CPVC or Radel (polyphenolsulfone is prohibited.

All condensate that forms in the vent must be able to drain back to the boiler.

Never leave the boiler in operation without the gas sample cap in place (Figure 7.27).

1. The components shown in Table 7.26 are supplied with this boiler for use in a 3” CPVC/PVC vent system. PVC piping must be supplied by the installer for the air intake pipe and any venting beyond the first 30”.

Table 7.26: CPVC/PVC Vent Kit Components

Quantity	Description	Size
1	30” Straight CPVC Pipe	3”
1	CPVC Elbow	3”
1	PVC Coupling Termination	3”
1	PVC 90° Elbow Termination	3”
2	Rodent Screen	3”

2. Assemble the vent system, starting at the boiler:
   a. If 3” PVC is to be used for venting, the 3” CPVC elbow and the 30” straight section of CPVC provided with the boiler must be used before transitioning to PVC. If necessary the 30” straight section of CPVC may be cut in any location and the CPVC elbow inserted between the two resulting segments.
   b. When cutting CPVC or PVC pipe, use a miter saw or a saw designed to cut PVC pipe. Use a miter box or other method to cut pipe squarely. De-burr both the inside and outside of the cut end.
   c. Dry fit all vent components before assembly.
   d. The vent adaptor has two different inside diameters. The larger (upper) inside diameter accepts 3” CPVC pipe and is used in this application (the smaller, lower, inside diameter accepts 3” nominal PolyPro, Polyflue or InnoFlue). A locking ring in the adaptor prevents the vent pipe from coming out of the adaptor once it is inserted. Lubricate the upper gasket in the vent adaptor with water and insert the first piece of 3” CPVC into the vent adaptor until it bottoms out.

NOTICE

Once a vent pipe is inserted into this adaptor, it is IMPOSSIBLE to remove it. Make sure the correct type of pipe is selected, and that it is of the correct length, before inserting it into the vent adaptor.

   e. If 2” CPVC is to be used for the vent system, reduce the first piece of 3” CPVC installed in Step (b) to 2” CPVC using a CPVC reducing coupling or elbow. Otherwise assemble the 3” CPVC elbow and the remainder of the 30” CPVC piping before transitioning to PVC. If 3” PVC is used, the first piece of PVC will either be connected to the CPVC elbow supplied with the boiler, or the end of a section of CPVC vent pipe. In the latter case, a PVC coupling may be used to connect the first piece of PVC to the last piece of CPVC.
   f. Clean all CPVC and PVC components with the appropriate primer before cementing. Cement the vent system together, starting at the boiler and following the instructions provided on the cans of cement and primer. Use a field supplied cement and primer that is listed for use with the materials being joined (CPVC and/or PVC). The following, or its equivalent, may be used to join CPVC to PVC:
      - IPS Corporation #P-70 Primer
      - IPS Corporation #790 Multi-Purpose Solvent Cement

   Always use primer on both the pipe and fitting before applying the cement. Assemble the pipe in accordance with the instructions on the cans of primer and cement.

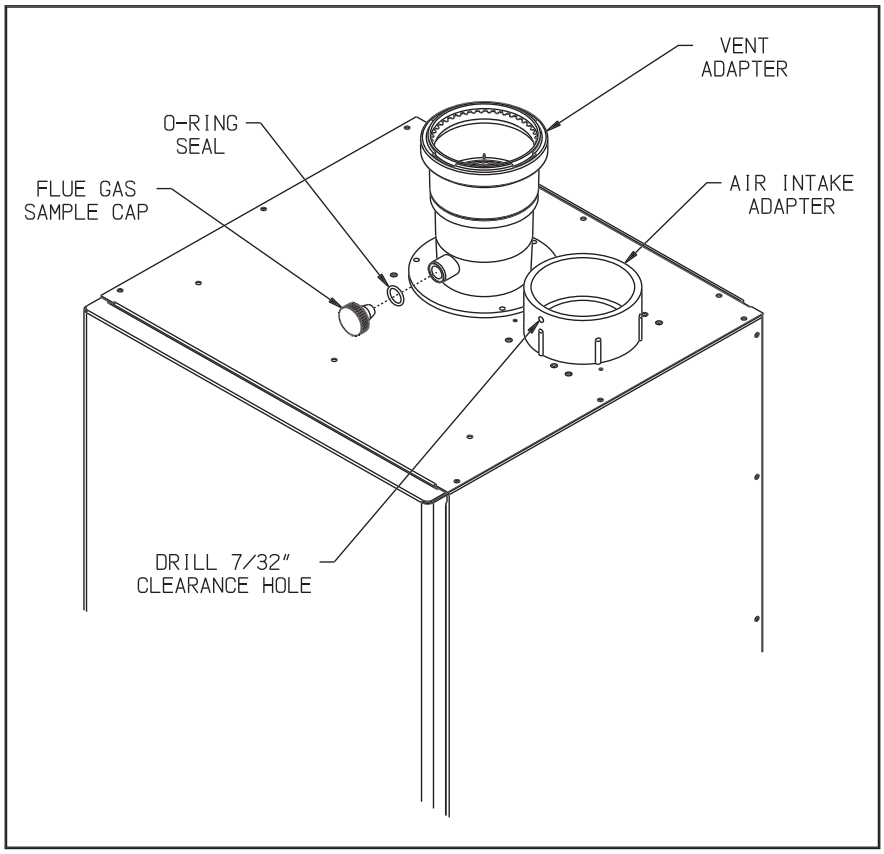

Figure 7.27: Vent Connections and Flue Gas Sample Cap Location

g. Assemble the rest of the vent system, being sure to pitch horizontal sections back towards the boiler 1/4”/ft. Support the vent at intervals not exceeding 4ft.

h. Maintain the clearances from the vent pipe outlined in Part VII-A of this manual. If exiting the exterior wall using PVC pipe, use half of an appropriately sized wall thimble (or a sheet metal plate) on the exterior of the building, to provide a weather tight seal while maintaining the proper clearance in the wall penetration. Seal the joint between the pipe and the wall plate using RTV applied on the exterior side of the wall. This sealant must not restrain the expansion of the vent pipe.

3. Installation of Air Intake System - Start assembly of the PVC air intake system at the boiler. Assembly of the air intake system is done in the same manner as the vent system except as follows:
   a. Drill a 7/32” clearance hole into the front side of the air intake adapter. Insert the first piece of PVC air intake pipe into the air intake connection and drill a 1/8” tap hole into the PVC which lines up with the 7/32” clearance hole and secure them together with a #10 x 1” sheet metal screw. Seal the joint between the intake pipe and the adaptor with RTV.
   b. All intake piping may be PVC.
   c. There is a 0” minimum clearance between the air intake piping and all types of construction.
   d. To the extent possible, pitch horizontal air intake piping towards the outdoors.

4, Installation of Horizontal Fitting Terminals (Terminal Option A):
   a. See Figure 7.28 for proper orientation of twin pipe horizontal terminals. Outer edge of both terminals must be within 10” from wall surface. (Figure 7.6)
   b. If desired, the terminals can be attached to the end of the vent and/or intake pipes with field supplied stainless steel screws so that they can be later removed for cleaning and inspection. If this is done, drill a clearance hole in the coupling or elbow and a tap hole in the end of the vent/intake pipes to accept these screws.
   c. If these terminals are installed on snorkels, assemble the snorkels as shown in Figure 7.12. Brace the vertical run of piping on the building exterior as required.

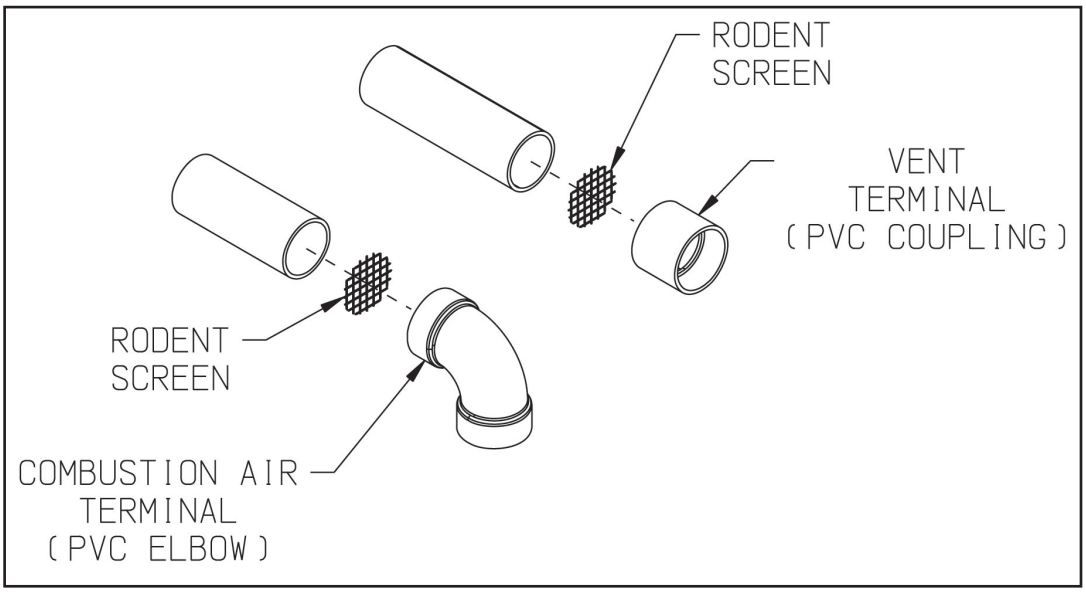

Figure 7.28: Installation of Standard Horizontal Terminals

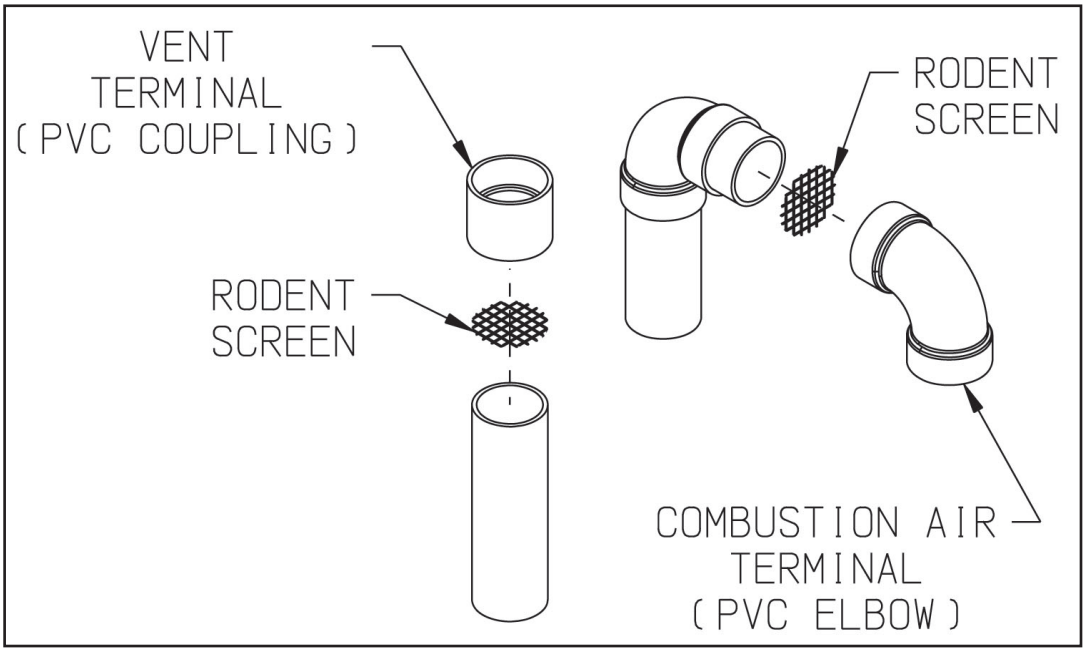

Figure 7.29: Installation of Standard Vertical Terminals

5. Installation of Vertical Fitting Terminals (Terminal Option H):
   a. See Figure 7.29 for the proper orientation of twin pipe vertical terminals.
   b. The coupling is used to secure the rodent screen to the end of the vent pipe.
   c. A 180° bend (or two 90° elbows) are installed on the top of the air intake pipe. If two 90° elbows are used, the rodent screen provided can be installed between them (Figure 7.29). If a 180° bend is used, install the rodent screen in the open side of the bend, using a ring made of PVC pipe. If desired, the termination fittings can be attached to the end of the vent and/or intake pipes with field supplied stainless steel screws so that they can be later removed for cleaning and inspection. If this is done, drill a clearance hole in these fittings and a tap hole in the end of the vent/intake pipes to accept these screws.
   d. Use roof flashings and storm collars to prevent moisture from entering the building. Seal the roof flashing to the roof using generally accepted practice for the type of roof on the installation. Apply RTV to seal the storm collars to the vent and intake pipes.
6. Installation of IPEX low profile vent terminal (Terminal Option B) - See Figure 7.30:
   a. Cut two holes in wall to accommodate the size PVC pipe being used. The distance between hole centers is 5.6”.
   b. Slide both vent and intake air pipes through the holes. and cement them to the base of the vent termination kit using a primer and cement listed for use with PVC.
   c. Fasten the vent base to the wall using the supplied screws and anchors. The anchors require the drilling of a 3/16” hole x 1-3/16” deep. Locate the holes using the vent base as a template.
   d. Screw the vent cap to the vent base using the supplied screws.
   e. Once the vent termination and pipes are secure seal the wall penetrations from the interior using a weather resistant RTV sealant.
7. Installation of DiversiTech Low Profile Terminal (Terminal Option C) – See Figure 7.31:
   a. Use vent plate as a guide to locate the openings for the vent and air intake pipes, as well as to locate the holes for the mounting screws.
   b. Drill two 3-1/8 holes through the wall for the vent and intake pipes.
   c. Drill four 3/16 holes for the mounting screws.
   d. Install the vent and intake pipe sections passing through the wall. Cut the pipes so that they protrude the following distances from the surface on which the vent plate will be mounted:
      - Vent: Between 1-3/4 and 2-1/4”
      - Intake: Between ¼ and 1”
   e. Seal pipe penetrations in wall with RTV (silicone sealant).
   f. Mount the vent plate using the #8 x 2” screws and anchors provided with this kit.
   g. Seal the vent plate to the wall with RTV.
   h. Apply a bead of RTV around the OD of the vent pipe near its end.
   i. Slide the vent cap over the vent pipe and secure to the wall plate with the #8 x 2” screws provided.
8. Installation of IPEX FGV or DiversiTech CVENT Concentric Vent Terminal (Terminal Options D,E,I & J) - This terminal may be used for either horizontal or vertical venting. See Figure 7.33 for horizontal installation or Figure 7.34 for vertical installation. When PVC is used for venting the 30” CPVC straight section and CPVC elbow supplied must be used prior to connection of the vent system to this terminal. If the vent system is too short to permit this, use the IPEX FGV CPVC terminal:
   a. For horizontal installations at the planned location cut a round hole in the exterior wall 1/2” larger than the “C’ dimension indicated on Figure 7.32 for the size terminal being used. (See Part VII-B of this manual for permitted terminal locations).

WARNING

Asphyxiation Hazard. CPVC/PVC vent piping and fittings rely on glued joints for proper sealing. Follow all manufacturer instructions and warnings when preparing pipe ends for joining and using the primer and the cement.

When PVC is used with the concentric vent kit, the 30” CPVC straight section and elbow must be used prior to connection of the vent system to this terminal. If the vent system is too short to permit this, use an FGV CPVC terminal.

Do not operate boiler without the rain cap in place.

Method of securing and sealing terminals to the outside wall must not restrain the expansion of vent pipe.

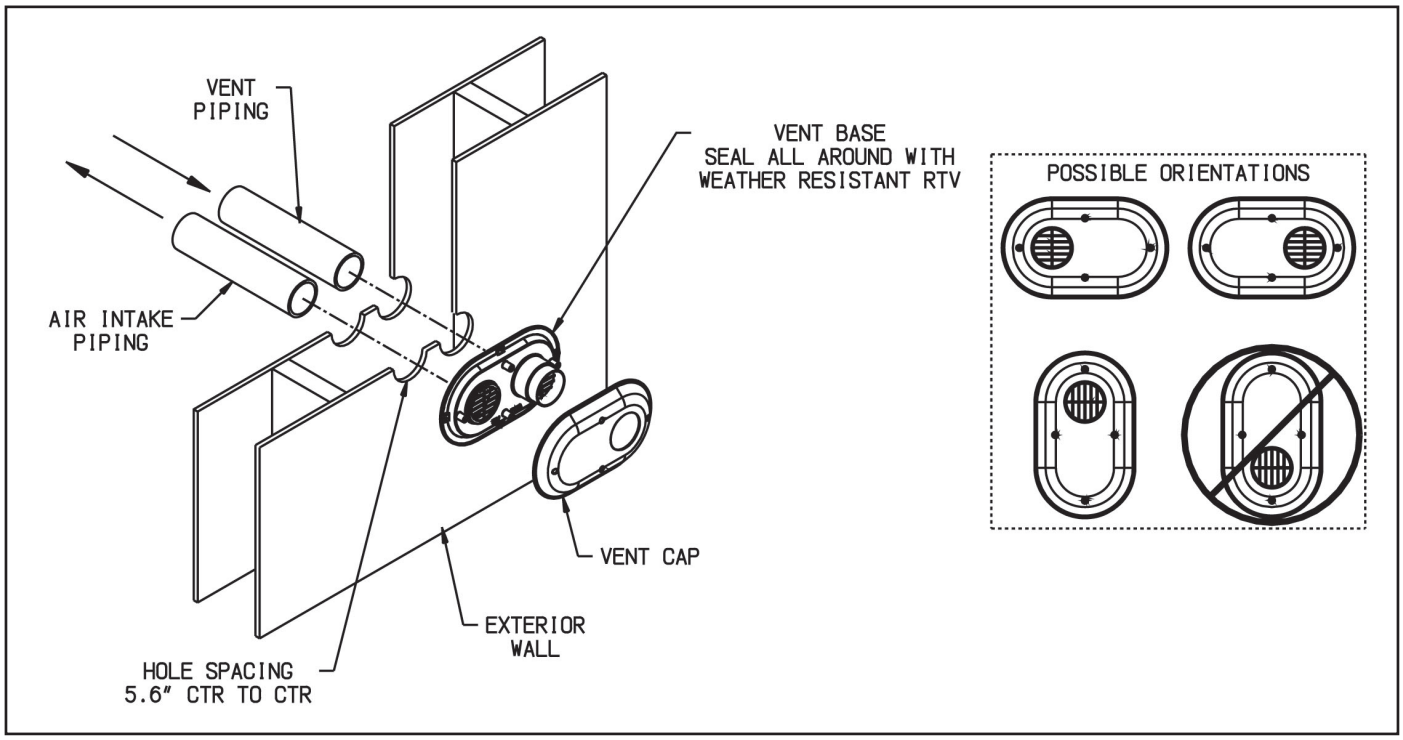

Figure 7.30: Installation of IPEX Low Profile Terminal Through Sidewall

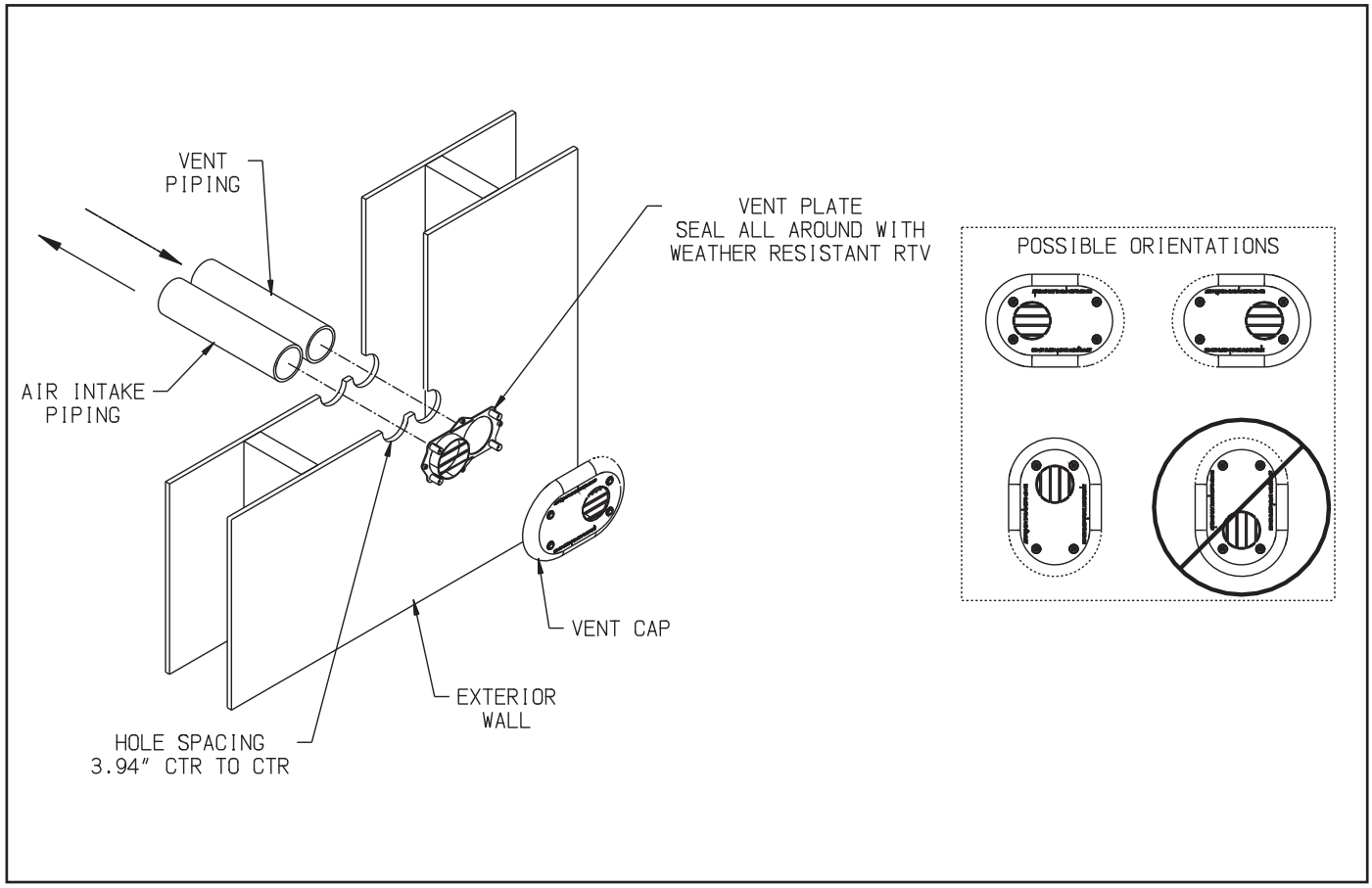

Figure 7.31: Installation of DiversiTech Low Profile Terminal Through Sidewall

*OVERALL LENGTH OF INNER PIPE TO BE 'A' INCHES LONGER THAN OVERALL LENGTH OF OUTER PIPE.

KIT SIZE	*'A'	'B'	'C'	MANUFACTURER
2"	7-3/8"	1-3/4"	3-1/2"	IPEX
2"	12-3/16"	3/4"	3-1/2"	DIVERSITECH
3"	8-3/4"	2-1/4"	4-1/2"	IPEX
3"	13-3/16"	1"	4-1/2"	DIVERSITECH

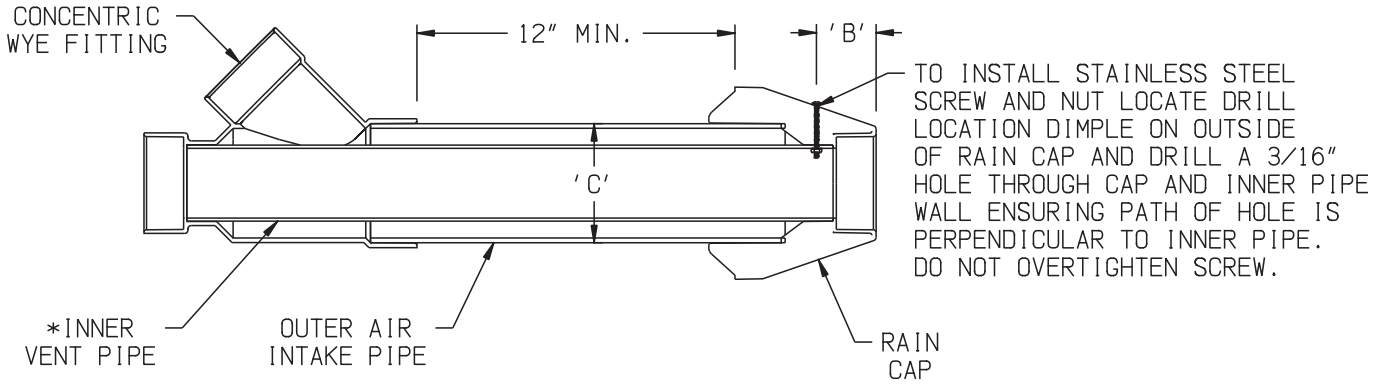

NOTES: 1. ALL CUTS MUST BE SQUARE AND DEBURRED.
2. LENGTHENING OF TERMINAL IS NOT PERMITTED.

Figure 7.32: Cutting IPEX and DiversiTech Concentric Vent Terminals

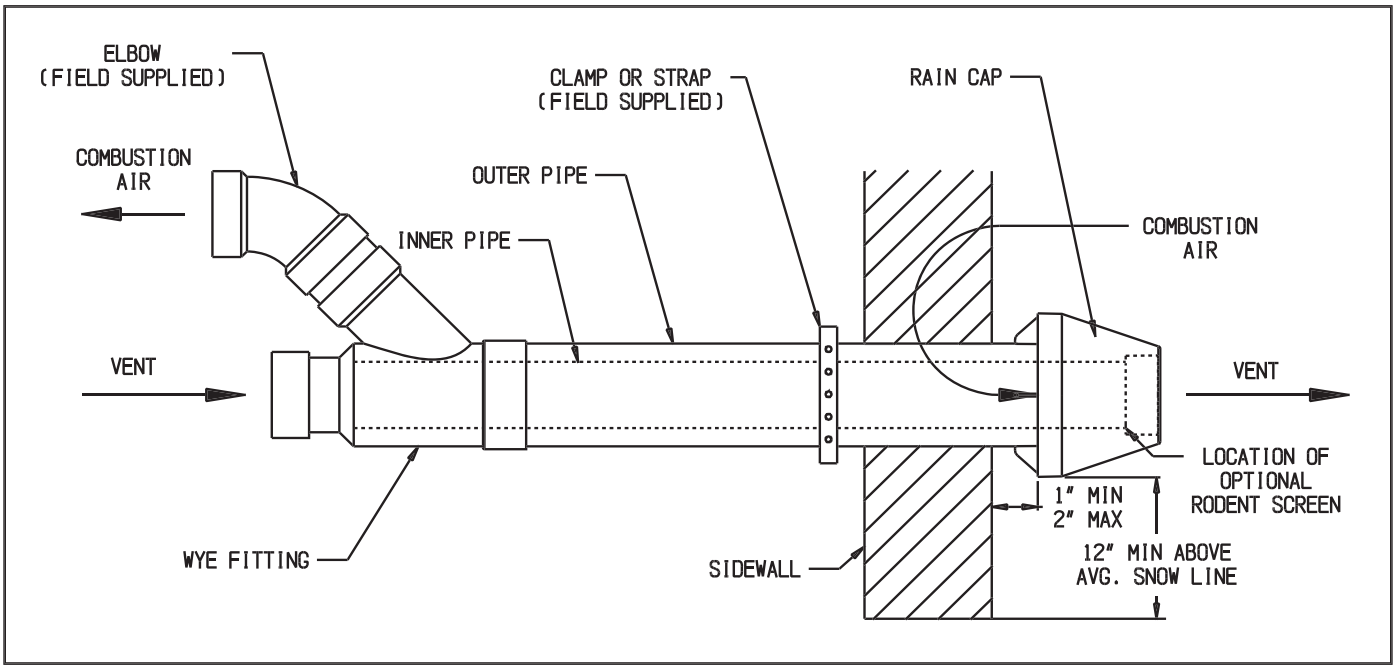

Figure 7.33: Installation of IPEX and DiversiTech Concentric Terminal through Sidewall

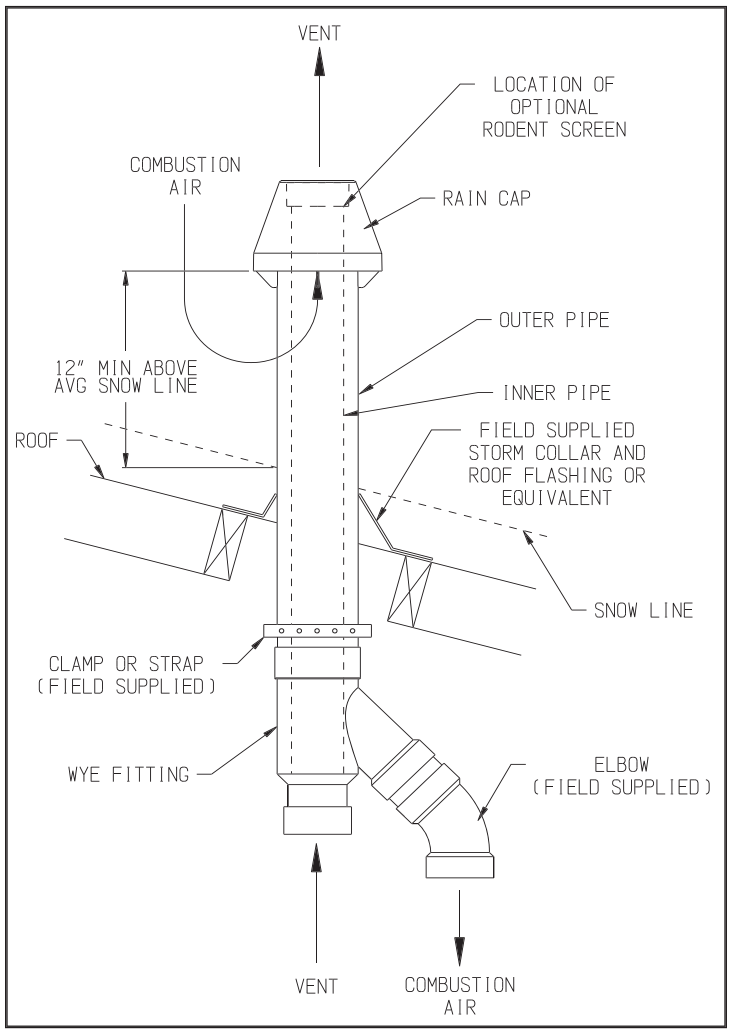

Figure 7.34: Installation of IPEX and DiversiTech Concentric Terminal Through Roof

b. For vertical installations, cut a hole in the roof large enough to clear the concentric terminal at the location of the terminal (see Part VII-C of this manual for permitted terminal locations).

c. If desired, the terminal can be shortened. See Figure 7.32 for specific information on making the terminal kit shorter based on the kit size being used. Cut the pipe squarely and de-burr both the OD and ID of the cut edges.

d. Cement the inner pipe section of PVC pipe supplied with this kit to the Wye fitting using a primer and cement listed for use with PVC.

e. Cement the outer pipe to the Wye, being careful, to keep the inner and outer pipes concentric.

f. Slip the partially assembled terminal through the wall or ceiling from the inside and for horizontal installations orient so that the side outlet on the Wye is on or above the horizontal plane.

g. For horizontal installations, seal the gap between the OD of the "outer pipe" and the exterior side of the wall with RTV sealant.

h. Cement the rain cap onto the inner pipe. If desired, the rain cap can be attached to the inner pipe with the supplied stainless steel screw and nut so that it can be later removed for cleaning and inspection. If this is done, drill a 3/16"clearance hole in the rain cap and inner pipe in the location shown on Figure 7.32 for the size terminal kit being used and affix screw and nut. Do not overtighten. A field supplied rodent screen may also installed on the end of the rain cap.

i. For vertical installations, use a roof flashing and storm collar to prevent moisture from entering the building. Seal the roof flashing to the roof using generally accepted practice for the type of roof on the installation. Install the storm collar after verifying that the bottom of the rain cap will be at least 12" above the normal snow line. Apply RTV to seal the storm collars to the terminal.

F. Assembly of DuraVent PolyPro Vent Systems

1. This boiler has been approved for use with the DuraVent PolyPro single wall Polypropylene vent system to be provided by the installer.

WARNING

Asphyxiation Hazard. Follow these instructions and the installation instructions included by the original Polypropylene venting component manufacturers, M&G/DuraVent. Failure to do so could cause products of combustion to enter the building, resulting in severe property damage, personal injury or death. Where a conflict arises between M&G/DuraVent instructions and these instructions, the more restrictive instructions shall govern.

Do not mix vent components or joining methods for listed manufacturers.

Examine all components for possible shipping damage prior to installation.

All condensate that forms in the vent must be able to drain back to the boiler.

2. Assemble the vent system, starting at the boiler:
   a. The vent adaptor has two different inside diameters. The smaller, lower, inside diameter accepts 3” nominal PolyPro (Figure 7.27). A locking ring in the adaptor prevents the vent pipe from coming out of the adaptor once it is inserted. Lubricate the upper gasket in the vent adaptor with soapy water and insert the first piece of 3” PolyPro into the adaptor until it bottoms out.

NOTICE

Once a vent pipe is inserted into this adaptor, it is IMPOSSIBLE to remove it. Make sure the correct type of pipe is selected, and that it is of the correct length, before inserting it into the vent adaptor.

   b. If 2” PolyPro is to be used for the vent system, reduce the first piece of 3” PolyPro installed in Step (a) to 2” using DuraVent # 3PPS-R2. Otherwise assemble the next piece of 3” PolyPro.
   c. For each joint, verify that the gasket is evenly seated in the bell (female) end of the pipe. Lubricate this gasket with water. Slide a locking band over the male end of the pipe to be joined as shown in Figure 7.35. Push the male end of the next section of pipe into the bell until it bottoms out, then back out 1/4-5/8” to provide room for thermal expansion. Push barb on locking band over the bell end of the first section of pipe as shown in Figure 7.35.
   d. Assemble the rest of the vent system per the manufacturer’s installation instructions, being sure to pitch horizontal sections back towards the boiler 5/8” per ft.
   e. Support each horizontal pipe section with a minimum of one wall strap each and at intervals not exceeding 4ft.

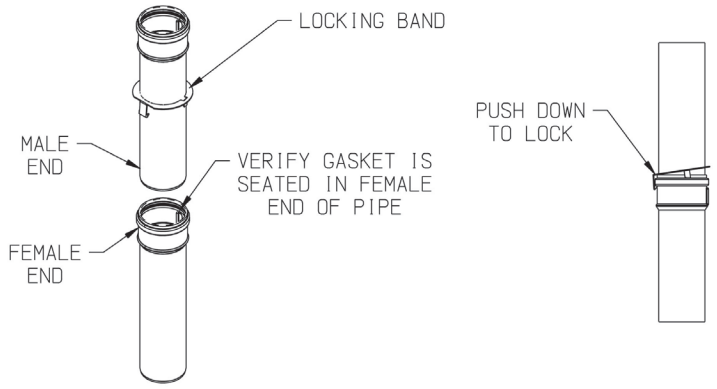

Figure 7.35: PolyPro Locking Band Installation

3. Installation of Air Intake System - Start assembly of the PVC air intake system at the boiler. Assembly of the air intake system is done in the same manner as the vent system except as follows:
   a. Drill a 7/32” clearance hole into the front side of the air intake adapter. Insert the first piece of PVC air intake pipe into the air intake connection and drill a 1/8” tap hole into the PVC which lines up with the 7/32” clearance hole and secure them together with a #10 x 1” sheet metal screw. Seal the joint between the intake pipe and the adaptor with RTV.
   b. All intake piping may be PVC.
   c. There is a 0” minimum clearance between the air intake piping and all types of construction.
   d. To the extent possible, pitch horizontal air intake piping towards the outside.

WARNING

Asphyxiation Hazard. Vent systems made by M&G/DuraVent rely on gaskets for proper sealing. When these vent system is used, take the following precautions:

- **Make sure that gasket is in position and undamaged in the female end of the pipe.**
- **Make sure that both the male and female pipes are free of damage prior to assembly.**
- **Only cut vent pipe as permitted by the vent manufacturer in accordance with their instructions. When pipe is cut, the cut end must be square and carefully de-burred prior to assembly.**
- **Use locking band clamps at all vent pipe joints.**
- **Do not use anything other than soapy water to lubricate gaskets.**

NOTICE

The venting system must be free to expand and contract and supported in accordance with the installation instructions included by the original Polypropylene venting component manufacturer, M&G/DuraVent. Polypropylene pipe sections must be disengaged 1/4 to 5/8 in. (6 mm to 16 mm) per joint to allow for thermal expansion.

4. Installation of Horizontal Fitting Terminals (Terminal Option A):
   a. See Figure 7.36 for proper orientation of twin pipe horizontal terminals. Outer edge of exhaust coupling must be 10” or less from the wall surface. (Figure 7.9)
   b. Remove the gasket from the end of the integral exhaust coupling and insert DuraVent Bird Guard #2PPS-BG or #3PPS-BG in it’s place.
   c. Add PVC intake per instructions from Part VII-F.
5. Installation of Vertical Fitting Terminals (Terminal Option H):
   a. See Figure 7.37 for the proper orientation of twin pipe vertical terminals.
   b. Remove the gasket from the end of the integral exhaust coupling and insert the installer supplied rodent screen in it’s place.
   c. A 180° bend (or two 90° elbows) are installed on the top of the air intake pipe. If two 90° elbows are used, the rodent screen provided can be installed between them (Figure 7.37). If a 180° bend is used, install the rodent screen in the open side of the bend, using a ring made of PVC pipe. If desired, the termination fittings can be attached to the end of the intake pipes with field supplied stainless steel screws so that they can be later removed for cleaning and inspection. If this is done, drill a clearance hole in these fittings and a tap hole in the end of the intake pipes to accept these screws.
   d. Use roof flashings and storm collars to prevent moisture from entering the building. Seal the roof flashing to the roof using generally accepted practice for the type of roof on the installation. Apply RTV to seal the storm collars to the vent and intake pipes.

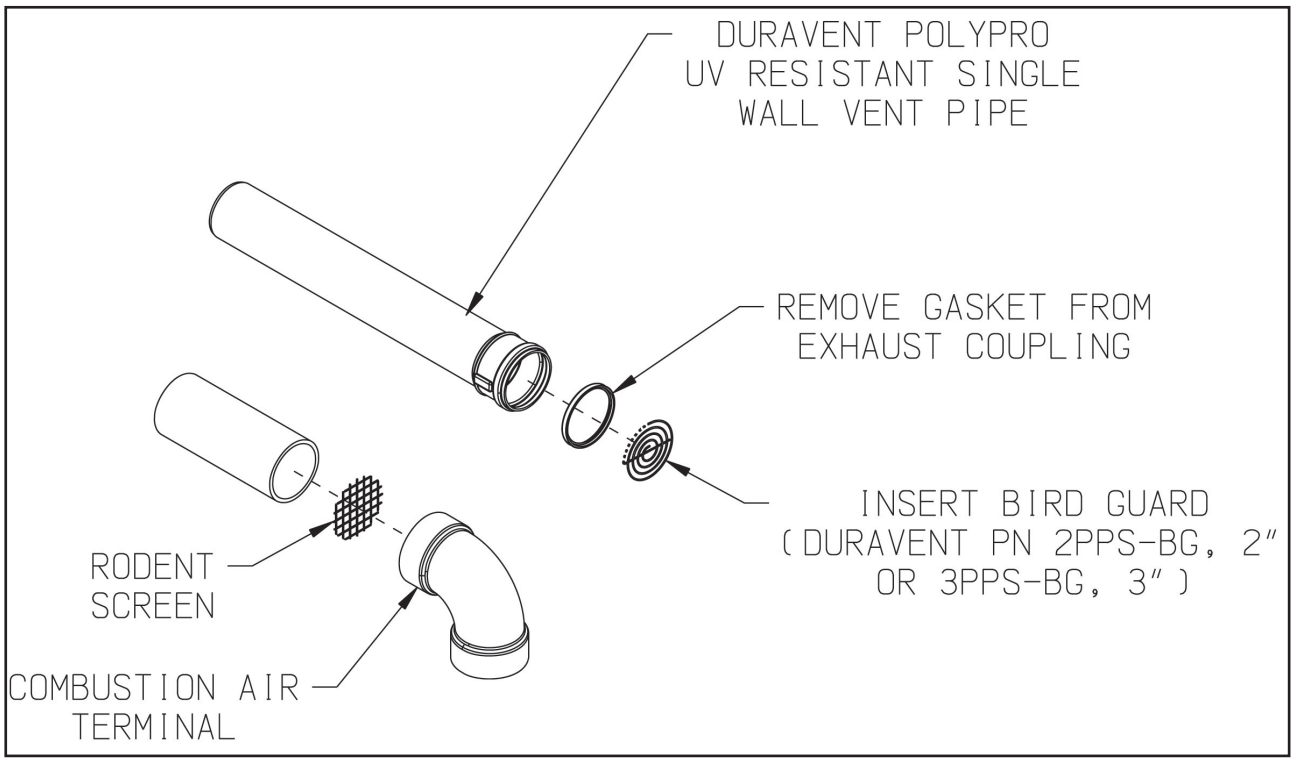

Figure 7.36: Installation of Duravent PolyPro UV Resistant Single Wall Horizontal Terminal

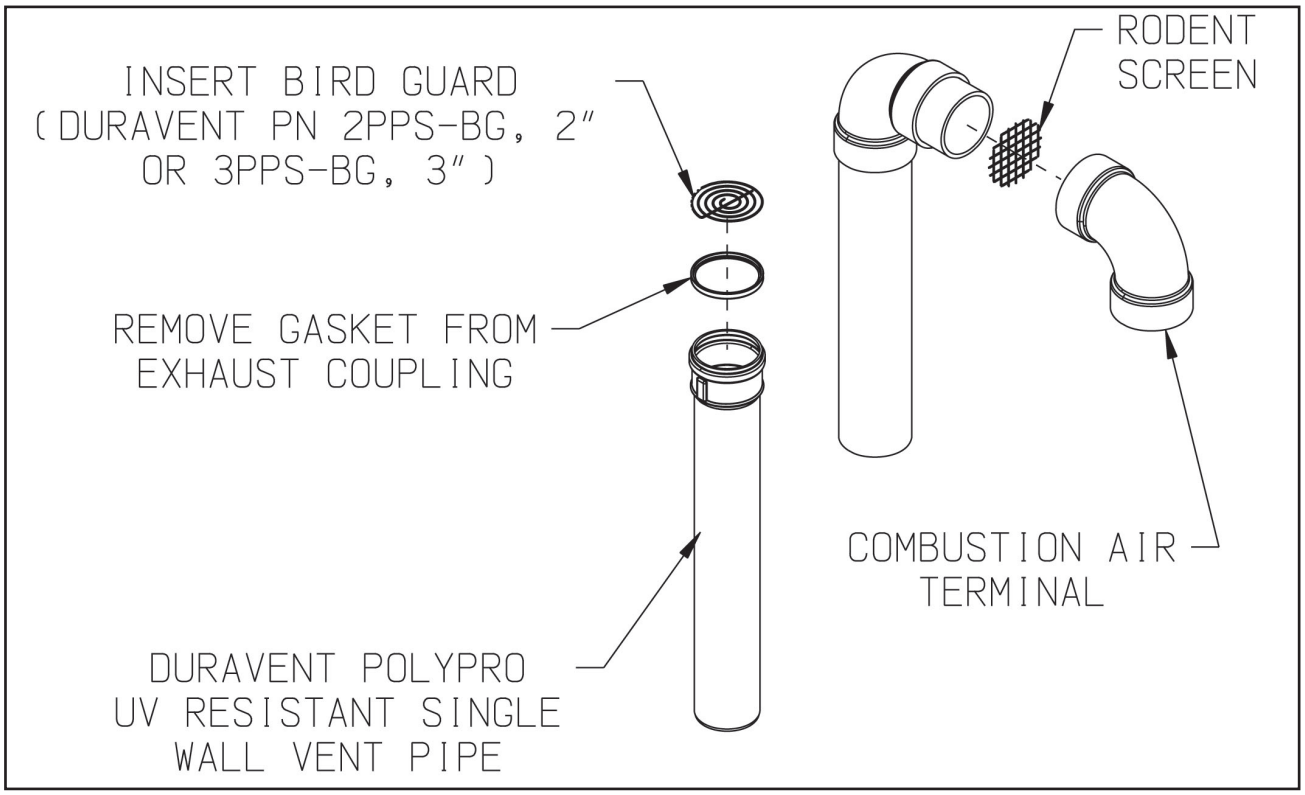

Figure 7.37: Installation of Duravent PolyPro UV Resistant Single Wall Vertical Terminal

6. Installation of DuraVent PolyPro Horizontal Concentric Vent Terminal (Terminal Option D) -
   Install PolyPro Horizontal Concentric Termination Kit #2PPS-HK or #3PPS-HK (Figure 7.39) as follows:
   a. At the planned location cut a 4-1/8" round hole for the 2" terminal or a 5-1/8" round hole for the 3" terminal in the exterior wall. (See Part VII-A of this manual for permitted terminal locations).
   b. If desired, the terminal can be shortened. Mark the desired location of the cut on the outer pipe no closer than 2" from the edge of the tab on the interior wall plate. Prior to cutting outer pipe measure dimension 'A' of the inner pipe as shown in Figure 7.38 and maintain this dimension after cutting the outer pipe. All cuts must be square and de-burred.
   c. Attach the exterior wall plate and seal all around with weather resistant RTV.
   d. Slide the cap through the exterior wall plate and hole from the outside of the building and orient the termination so the air intake slots face down. The cap must be installed level or sloped 1/8" per foot away from the appliance.
   e. Seal the termination to the exterior wall plate with weather resistant RTV.
   f. Slide the interior wall plate over the termination and attach to the wall from inside the room.
   g. Attach the interior wall plate to the termination with the provided hardware.
   h. Install gaskets into co-linear adapter.
   i. Attach co-linear adapter to horizontal termination and orient so that the side outlet on the adapter is on or above the horizontal plane.
7. Vertical Installations using PolyPro Vertical Concentric Termination Kit #2PPS-VK or #3PPS-VK (Figure 7.40):
   a. Cut a hole in the roof large enough to clear the concentric terminal at the location of the terminal (see Part VII-A of this manual for permitted terminal locations).
   b. Use a roof flashing and storm collar to prevent moisture from entering the building. See Figure 7.40 for the model number of the flashing to be used depending on the type of roof. Seal the roof flashing to the roof using generally accepted practice for the type of roof on the installation.
   c. Slide the vertical termination into the flashing from above until seated on the flashing.
   d. Plumb the termination and mount the support bracket to the structure.
   e. Install gaskets into co-linear adapter.
   f. Attach co-linear adapter to vertical termination.

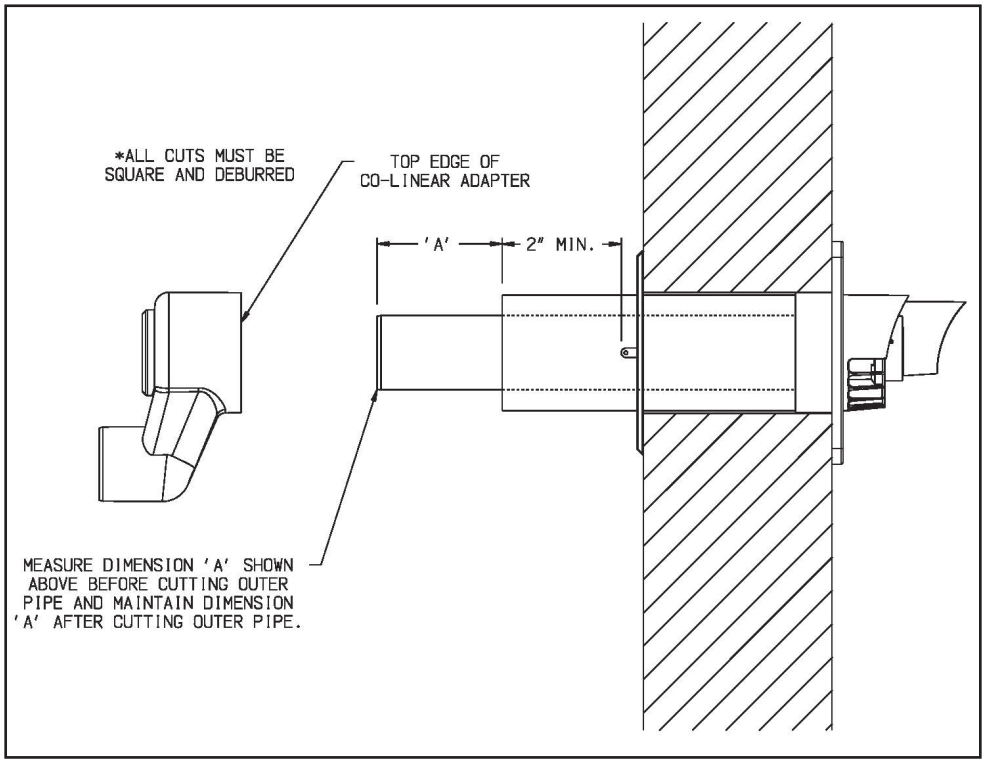

Figure 7.38: Cutting Duravent PolyPro Horizontal Concentric Vent Terminal

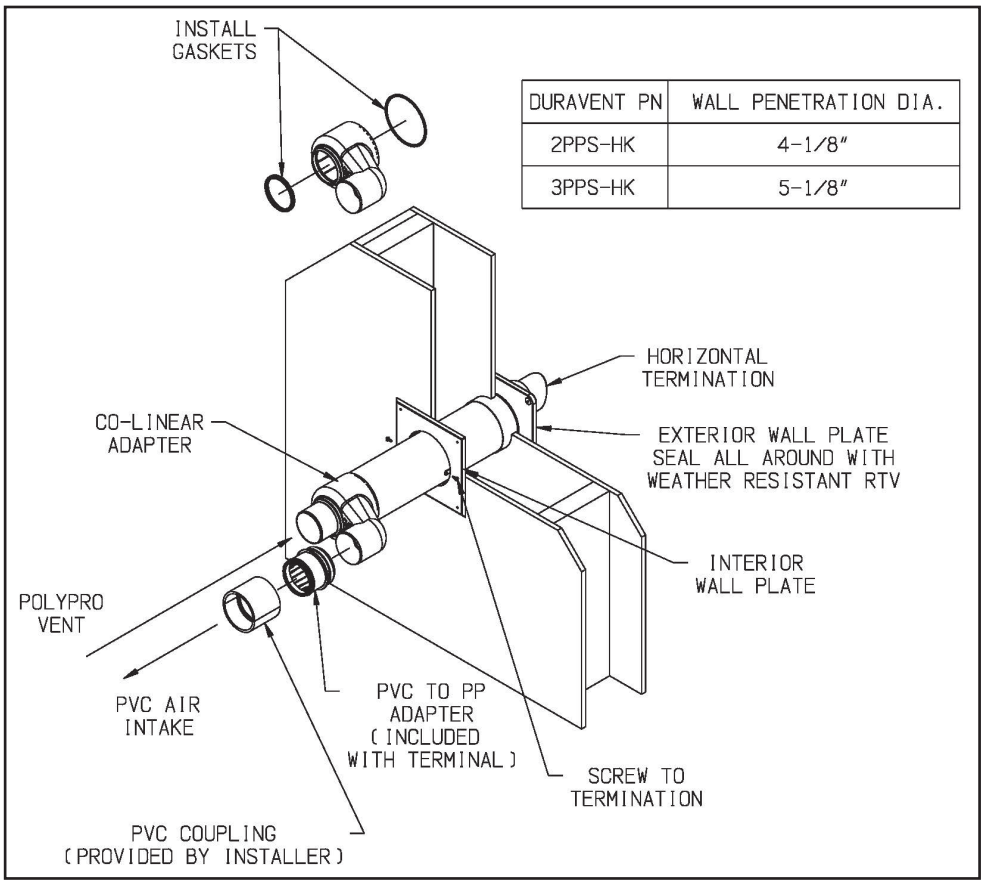

DURAVENT PN	WALL PENETRATION DIA.
2PPS-HK	4-1/8"
3PPS-HK	5-1/8"

Figure 7.39: Installation of Duravent PolyPro Concentric Vent Terminal Through Sidewall

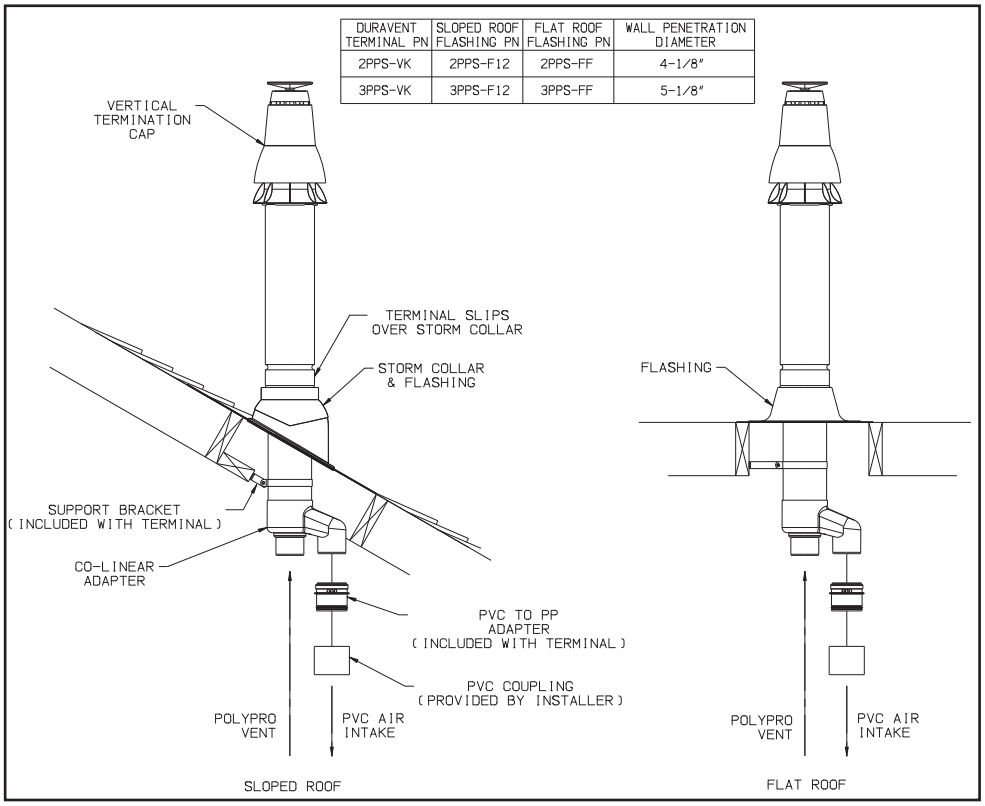

DURAVENT TERMINAL PN	SLOPED ROOF FLASHING PN	FLAT ROOF FLASHING PN	WALL PENETRATION DIAMETER
2PPS-VK	2PPS-F12	2PPS-FF	4-1/8"
3PPS-VK	3PPS-F12	3PPS-FF	5-1/8"

Figure 740: Installation of Duravent PolyPro Concentric Terminal Through Roof

8. Installations using PolyPro-flex (Vent Options 18,19,33,34):

WARNING

Asphyxiation Hazard. When using PolyPro flex, observe the following precautions:

- **PolyPro flex may be damaged by handling at low temperatures. Do not bend, uncoil, or attempt to install if it has been stored at a temperature below 42°F without allowing it to warm to a higher temperature first.**
- **Do not bend PolyPro flex more than 45°.**
- **Instructions below reference the DuraVent PolyPro Flex instruction manual. Not all vent configurations shown in the DuraVent manual are approved for use with this boiler.**

Refer to DuraVent PolyPro flex Instructions for assembly of all flex components including the chimney cap and the adaptor to rigid PolyPro at the base of the masonry or B vent chimney. In addition, observe the following requirements:

a. Refer to the appropriate Vent option in Tables 7.13b or 7.21 for a list of the principle flex components required. Rigid vent pipe by the same manufacturer will also be required for the run from the boiler to the base of chimney.

b. Masonry chimneys cannot be used for an air chase

c. B vent chimneys can only be used for an air chase (Vent options 18, 19) if the B vent has the minimum size shown in Table 7.13b and is fully accessible for sealing of all joints and seams.

d. When Vent Option 18 or 19 is used, install a Tee on the base of the B-vent that is the same size as the B- Vent chimney. Install the PolyPro Lower B–Vent adaptor in the base of this Tee as described in the DuraVent PolyPro Flex instructions.

Connection of the PVC air intake pipe to the side outlet of the tee is made using a cap and a PVC socket x male thread adaptor (2” or 3”, depending on the Vent Option). Cut a clearance hole in the cap for the male threads. Secure the adaptor to the cap using a 2” or 3” electrical conduit lock nut. Seal all joints with RTV.

G. Assembly of Selkirk Polyflue Vent Systems

WARNING

Asphyxiation Hazard. When using PolyPro flex, observe the following precautions:

- **PolyPro flex may be damaged by handling at low temperatures. Do not bend, uncoil, or attempt to install if it has been stored at a temperature below 42°F without allowing it to warm to a higher temperature first.**
- **Do not bend PolyPro flex more than 45°.**
- **Instructions below reference the DuraVent PolyPro Flex instruction manual. Not all vent configurations shown in the DuraVent manual are approved for use with this boiler.**

1. This boiler has been approved for use with the Selkirk Polyflue single wall Polypropylene vent system to be provided by the installer.

2. Assemble the vent system, starting at the boiler:

   a. The vent adaptor has two different inside diameters. The smaller, lower, inside diameter accepts 3” nominal Polyflue (Figure 7.27). A locking ring in the adaptor prevents the vent pipe from coming out of the adaptor once it is inserted. Lubricate the upper gasket in the vent adaptor with mild soapy water and insert the first piece of 3” Polyflue into the adaptor until it bottoms out.

   b. If 2” Polyflue is to be used for the vent system, reduce the first piece of 3” Polyflue installed in Step (a) to 2” using Selkirk #3PF-3R2. Otherwise assemble the next piece of 3” Polyflue.

   c. For each joint, verify that the gasket is evenly seated in the bell (female) end of the pipe. Lubricate this gasket with mild soapy water. Slide a Pipe Locking Band over the male end of the pipe to be joined as shown in Figure 7.41. Push the male end of the next section of pipe into the bell until it bottoms out, then back out 1/8—1/4” to provide room for thermal expansion. Slide pipe locking band over the female end of the connections and tighten both hose clamps.

   d. Assemble the rest of the vent system per the manufacturer’s installation instructions, being sure to pitch horizontal sections back towards the boiler 5/8” per ft.

e. Support each pipe section as described in Polyflue manual at intervals not exceeding the following:

Pipe size	Horizontal	Vertical
2”	30in	16ft
3”	39in	16ft

NOTICE

Once a vent pipe is inserted into this adaptor, it is IMPOSSIBLE to remove it. Make sure the correct type of pipe is selected, and that it is of the correct length, before inserting it into the vent adaptor.

3. Installation of Air Intake System - Start assembly of the PVC air intake system at the boiler. Assembly of the air intake system is done in the same manner as the vent system except as follows:
   a. Drill a 7/32” clearance hole into the front side of the air intake adapter. Insert the first piece of PVC air intake pipe into the air intake connection and drill a 1/8” tap hole into the PVC which lines up with the 7/32” clearance hole and secure them together with a #10 x 1” sheet metal screw. Seal the joint between the intake pipe and the adaptor with RTV.
   b. All intake piping may be PVC. There is a 0” minimum clearance between the air intake piping and all types of construction.
   c. To the extent possible, pitch horizontal air intake piping towards the outside.
4. Installation of Horizontal Fitting Terminals (Terminal Option A):
   a. See Figure 7.42 for proper orientation of twin pipe horizontal terminals. Outer edge of exhaust coupling must be 10” or less from the wall surface. (Figure 7.9)
   b. Remove the gasket from the end of the integral exhaust coupling and insert Selkirk #2PF-HVST or #3PFHVST in its place.
   c. Add PVC intake per instructions from Part VII-F.
5. Installation of Vertical Fitting Terminals (Terminal Option H):
   a. See Figure 7.43 for the proper orientation of twin pipe vertical terminals.
   b. Remove the gasket from the end of the integral exhaust coupling and insert Selkirk #2PF-HVST or #3PFHVST in its place.
   c. A 180° bend (or two 90° elbows) are installed on the top of the air intake pipe. If two 90° elbows are used, the rodent screen provided can be installed between them (Figure 7.43). If a 180° bend is used, install the rodent screen in the open side of the bend, using a ring made of PVC pipe. If desired, the termination fittings can be attached to the end of the intake pipes with field supplied stainless steel screws so that they can be later removed for cleaning and inspection. If this is done, drill a clearance hole in these fittings and a tap hole in the end of the intake pipes to accept these screws.
   d. Use roof flashings and storm collars to prevent moisture from entering the building. Seal the roof flashing to the roof using generally accepted practice for the type of roof on the installation. Apply RTV to seal the storm collars to the vent and intake pipes.

WARNING

Asphyxiation Hazard. Selkirk Polyflue vent systems rely on gaskets for proper sealing. When this vent system is used, take the following precautions:

- **Make sure that gasket is in position and undamaged in the female end of the pipe.**
- **Make sure that both the male and female pipes are free of damage prior to assembly.**
- **Only cut vent pipe as permitted by the vent manufacturer in accordance with their Instructions. When pipe is cut, the cut end must be square and carefully de-burred prior to assembly.**
- **Use pipe locking bands at all vent pipe joints.**

NOTICE

The venting system must be free to expand and contract and supported in accordance with the installation instructions included by the original Polypropylene venting component manufacturer, Selkirk. Polypropylene pipe sections must be disengaged 1/8 to 1/4 in. (3mm to 6mm) per joint to allow for thermal expansion.

6. Installations using flexible Polyflue (Vent Options 35,36):

WARNING

Asphyxiation Hazard. When using Polyflue flex, observe the following precautions:

- **Polyflue flex may be damaged by handling at low temperatures. Do not bend, uncoil or attempt to install if it has been stored at a temperature below 42°F without allowing it to warm to a higher temperature first.**
- **Do not bend Polyflue flex more than 45°.**
- **Instructions below reference the Selkirk Polyflue instruction manual. Not all vent configurations shown in the Selkirk vent manual are approved for use with this boiler.**

Refer to Selkirk Polyflue Instructions for assembly of all flex components including the chimney cap and the adaptor to rigid Polyflue at the base of the masonry or B vent chimney. In addition, observe the following requirements:

a. Refer to the appropriate Vent option in Table 7.21 for a list of the principle flex components required. Rigid vent pipe by the same manufacturer will also be required for the run from the boiler to the base of the chimney.

b. Polyflue may not be used in air chase applications.

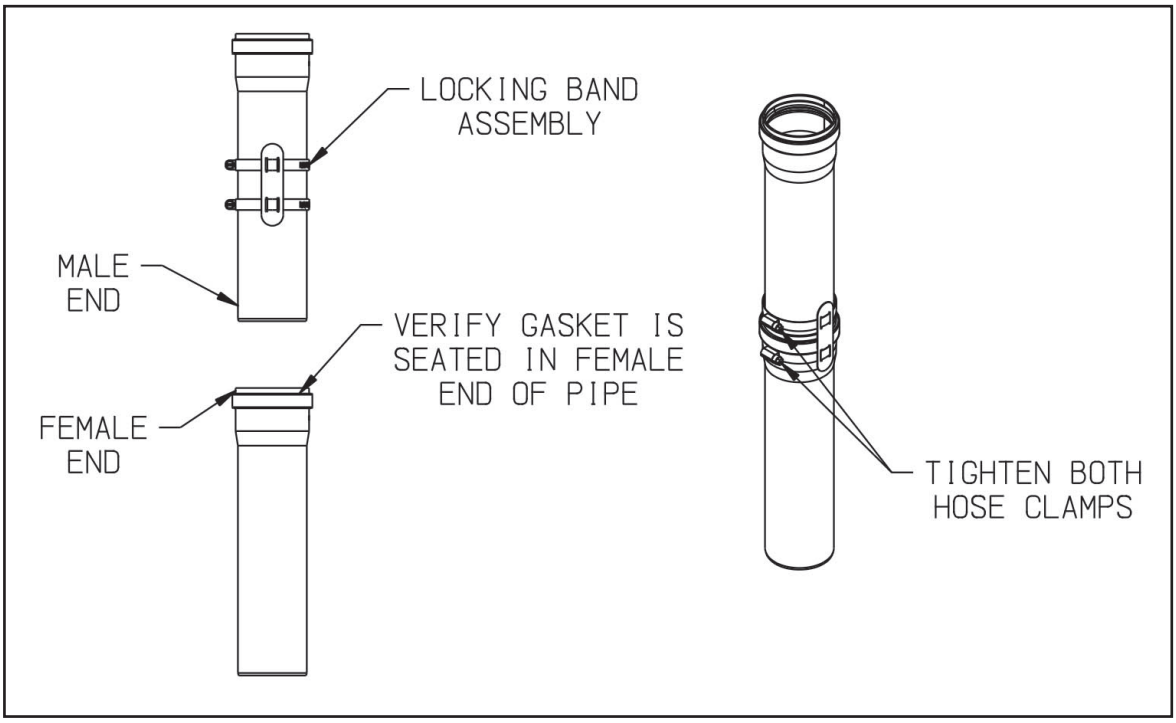

Figure 7.41: Polyflue Pipe Locking Band Installation

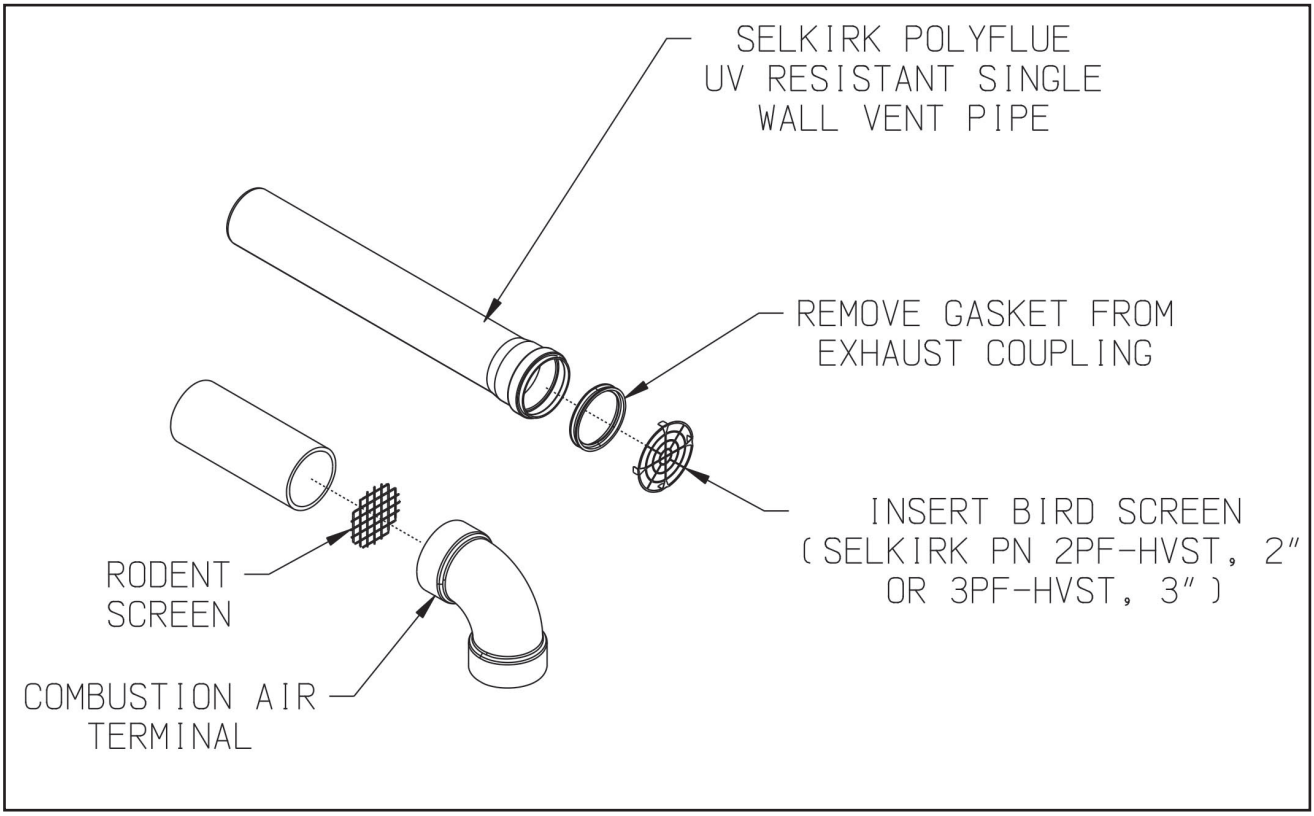

Figure 7.42: Installation of Selkirk Polyflue UV Resistant Single Wall Horizontal Terminal

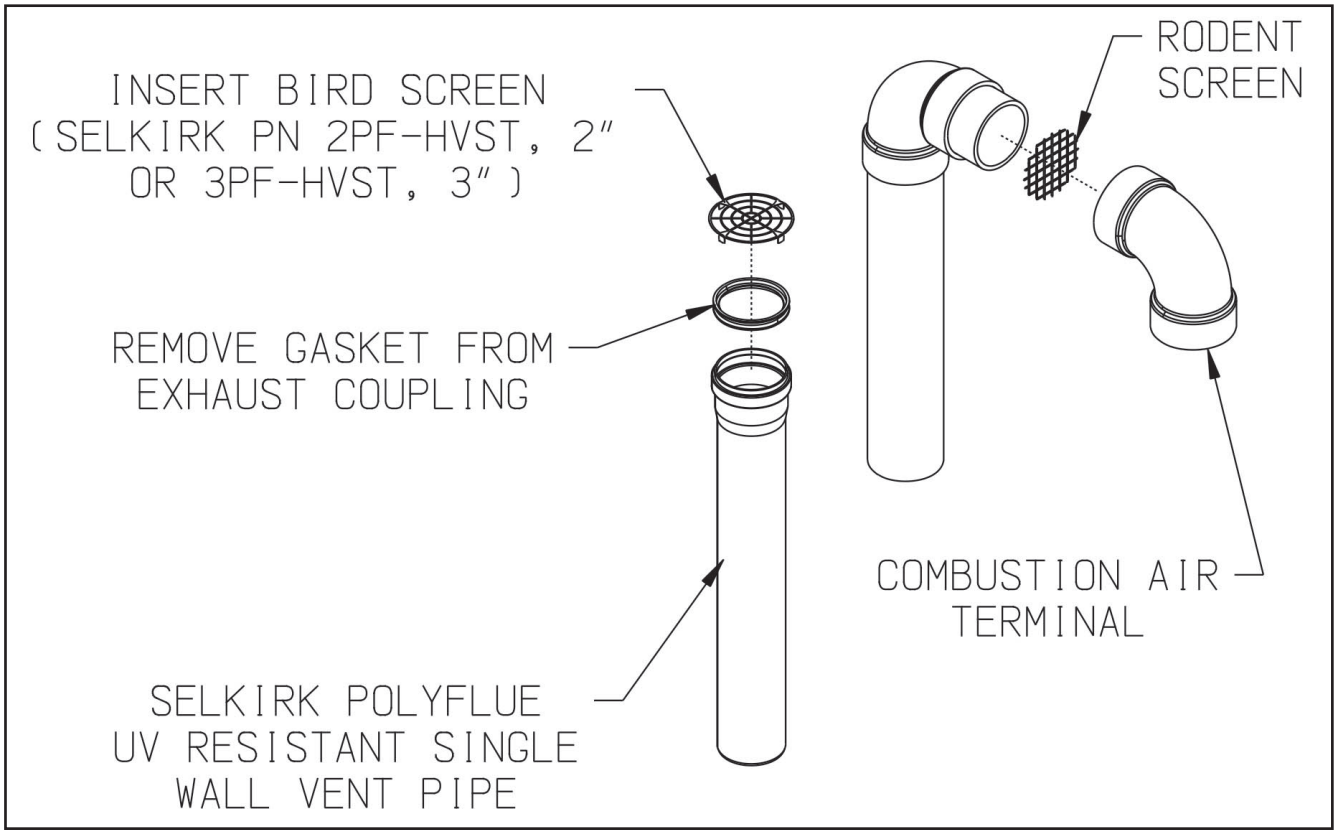

Figure 7.43: Installation of Selkirk Polyflue UV Resistant Single Wall Vertical Terminal

H. Assembly of Centrotherm InnoFlue Vent Systems

1. This boiler has been approved for use with the Centrotherm InnoFlue single wall Polypropylene vent system to be provided by the installer.

WARNING

Asphyxiation Hazard. Follow these instructions and the installation instructions included by the original Polypropylene venting component manufacturers, Centrotherm. Failure to do so could cause products of combustion to enter the building, resulting in severe property damage, personal injury or death. Where a conflict arises between Centrotherm instructions and these instructions, the more restrictive instructions shall govern.

Do not mix vent components or joining methods for listed manufacturers.

Examine all components for possible shipping damage prior to installation.

All condensate that forms in the vent must be able to drain back to the boiler.

2. Assemble the vent system, starting at the boiler:
   a. The vent adaptor has two different inside diameters. The smaller, lower, inside diameter accepts 3” nominal InnoFlue (Figure 7.27). A locking ring in the adaptor prevents the vent pipe from coming out of the adaptor once it is inserted. Lubricate the upper gasket in the vent adaptor with water and insert the first piece of 3” InnoFlue into the adaptor until it bottoms out.

NOTICE

Once a vent pipe is inserted into this adaptor, it is IMPOSSIBLE to remove it. Make sure the correct type of pipe is selected, and that it is of the correct length, before inserting it into the vent adaptor.

   b. If 2” InnoFlue is to be used for the vent system, reduce the first piece of 3” InnoFlue installed in Step (a) to 2” using Centrotherm # ISRD0302. Otherwise assemble the next piece of 3” InnoFlue.
   c. For each joint, verify that the gasket is evenly seated in the bell (female) end of the pipe. Lubricate this gasket with Centrocerin # IACE50. Slide a connector ring over the male end of the pipe to be joined as shown in Figure 7.44. Push the male end of the next section of pipe into the bell until it bottoms out, then back out 1/4” to provide room for thermal expansion. Push hook on connecting ring over the bell end of the first section of pipe as shown in Figure 7.44.
   d. Assemble the rest of the vent system per the manufacturer’s installation instructions, being sure to pitch horizontal sections back towards the boiler 5/8”/ft.
   e. Support each horizontal pipe section with a minimum of one wall strap each and at intervals not exceeding 39in.

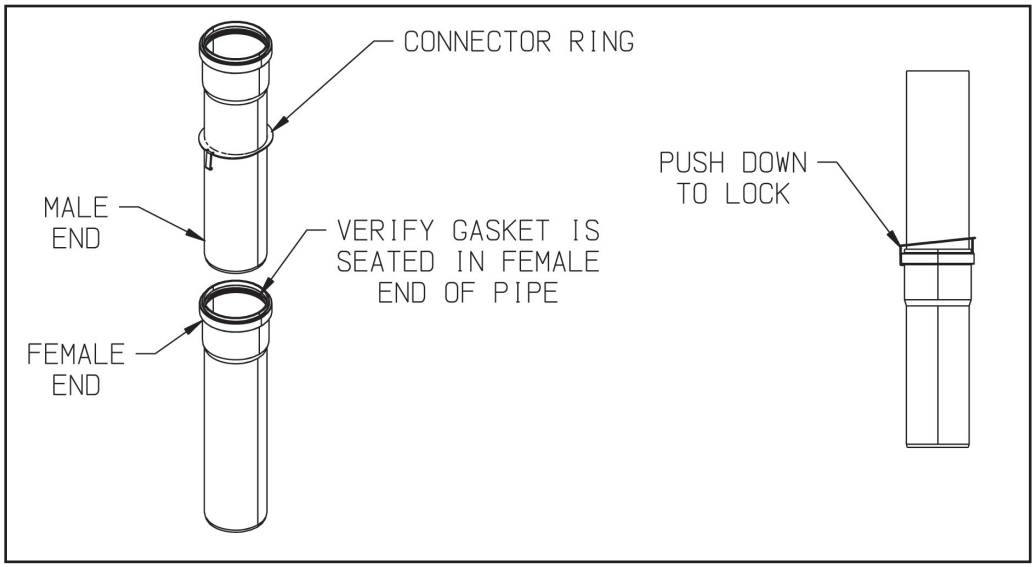

Figure 7.44: InnoFlue Connector Ring Installation

3. Installation of Air Intake System - Start assembly of the PVC air intake system at the boiler. Assembly of the air intake system is done in the same manner as the vent system except as follows:
   a. Drill a 7/32” clearance hole into the front side of the air intake adapter. Insert the first piece of PVC air intake pipe into the air intake connection and drill a 1/8” tap hole into the PVC which lines up with the 7/32” clearance hole and secure them together with a #10 x 1” sheet metal screw. Seal the joint between the intake pipe and the adaptor with RTV.
   b. All intake piping may be PVC.
   c. There is a 0” minimum clearance between the air intake piping and all types of construction.
   d. To the extent possible, pitch horizontal air intake piping towards the outside.

WARNING

Asphyxiation Hazard. Vent systems made by Centrotherm rely on gaskets for proper sealing. When this vent system is used, take the following precautions:

- **Make sure that gasket is in position and undamaged in the female end of the pipe.**
- **Make sure that both the male and female pipes are free of damage prior to assembly.**
- **Only cut vent pipe as permitted by the vent manufacturer in accordance with their instructions. When pipe is cut, the cut end must be square and carefully de-burred prior to assembly.**
- **Use connector rings at all vent pipe joints.**

NOTICE

The venting system must be free to expand and contract and supported in accordance with the installation instructions included by the original Polypropylene venting component manufacturer, Centrotherm. Polypropylene pipe sections must be disengaged 1/4 in. (6mm) per joint to allow for thermal expansion.

4. Installation of Horizontal Fitting Terminals (Terminal Option A):
   a. See Figure 7.45 for proper orientation of twin pipe horizontal terminals. Outer edge of end pipe must be 10” or less from the wall surface. (Figure 7.5)
   b. Use plain end UV stabilized Centrotherm 2” pipe # ISEP02 or ISEP0239 or 3” pipe # ISEP03 or ISEP0339 and insert Centrotherm Bird Screen #IASPP02 or #IASPP03 in the end of the pipe.
   c. Add PVC intake per instructions from Part VII-F.

5. Installation of Vertical Fitting Terminals (Terminal Option H):
   a. See Figure 7.46 for the proper orientation of twin pipe vertical terminals.
   b. Use plain end UV stabilized Centrotherm 2” pipe # ISEP02 or ISEP0239 or 3” pipe # ISEP03 or ISEP0339 and insert Centrotherm Bird Screen #IASPP02 or #IASPP03 in the end of the pipe.
   c. A 180° bend (or two 90° elbows) are installed on the top of the air intake pipe. If two 90° elbows are used, the rodent screen provided can be installed between them (Figure 7.46). If a 180° bend is used, install the rodent screen in the open side of the bend, using a ring made of PVC pipe. If desired, the termination fittings can be attached to the end of the intake pipes with field supplied stainless steel screws so that they can be later removed for cleaning and inspection. If this is done, drill a clearance hole in these fittings and a tap hole in the end of the intake pipes to accept these screws.
   d. Use roof flashings and storm collars to prevent moisture from entering the building. Seal the roof flashing to the roof using generally accepted practice for the type of roof on the installation. Apply RTV to seal the storm collars to the vent and intake pipes.

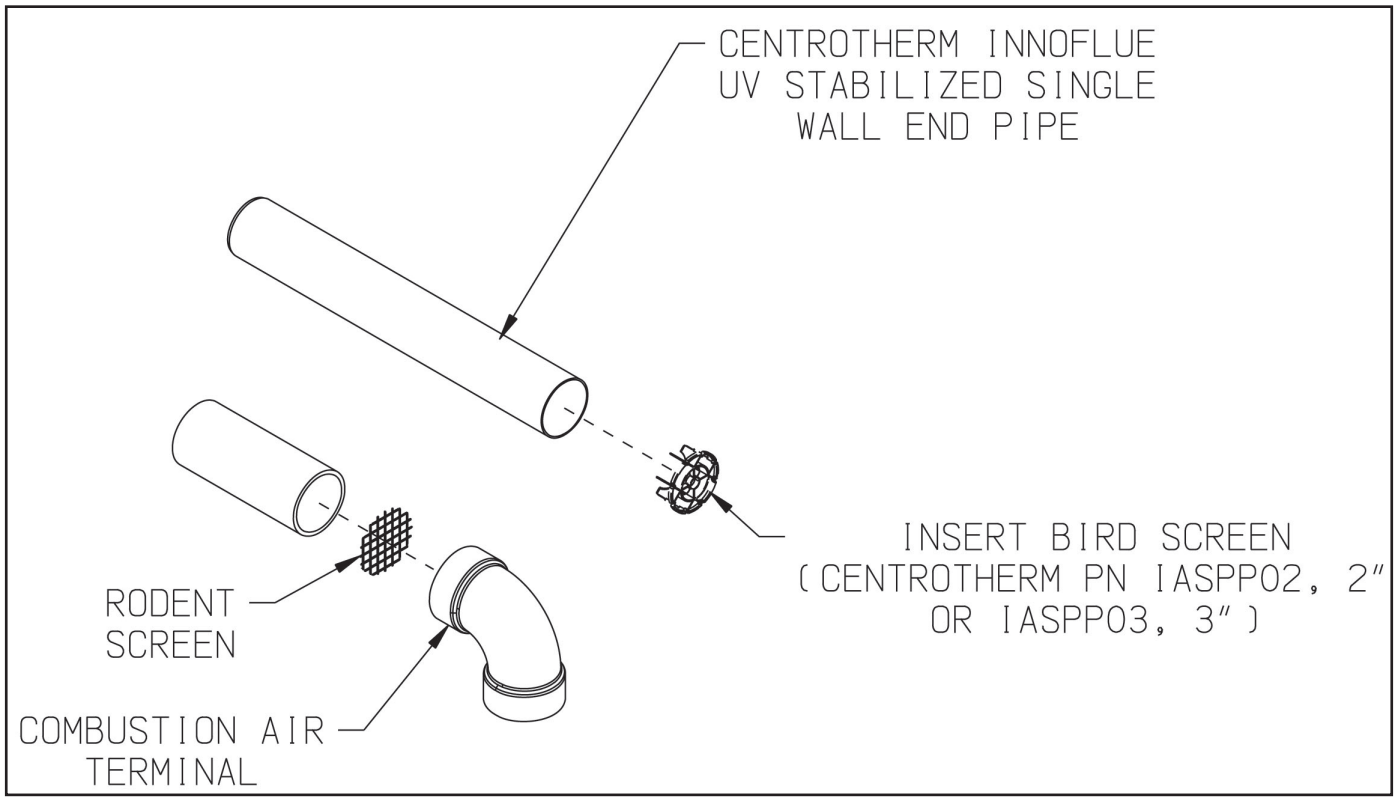

Figure 7.45: Installation of Centrotherm InnoFlue UV Stabilized Single Wall Horizontal Terminal

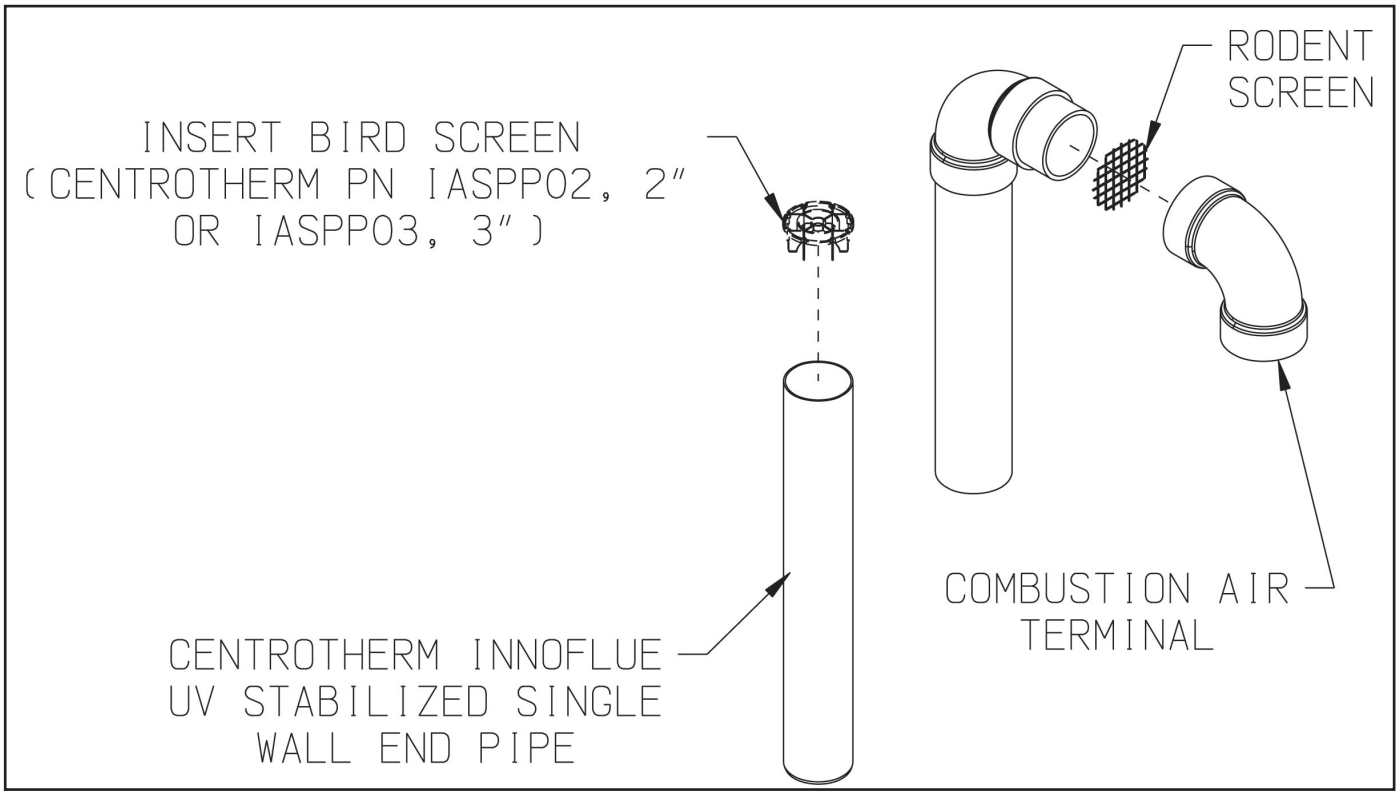

Figure 7.46: Installation of Centrotherm InnoFlue UV Stabilized Single Wall Vertical Terminal

6. Installations using InnoFlue Flex (Vent Options 20,21,37,38):

WARNING

Asphyxiation Hazard. When using InnoFlue Flex, observe the following precautions:

- **InnoFlue Flex may be damaged by handling at low temperatures. Do not bend, uncoil or attempt to install if it has been stored at a temperature below 42°F without allowing it to warm to a higher temperature first.**
- **Do not bend InnoFlue Flex more than 45°.**
- **Instructions below reference the Centrotherm InnoFlue instruction manual. Not all vent configurations shown in the Centrotherm manual are approved for use with this boiler.**

Refer to Centrotherm InnoFlue Instructions for assembly of all flex components including the chimney cap and the adaptor to rigid InnoFlue at the base of the masonry or B vent chimney. In addition, observe the following requirements:

a. Refer to the appropriate Vent option in Tables 7.13b or 7.21 for a list of the principle flex components required. Rigid vent pipe by the same manufacturer will also be required for the run from the boiler to the base of chimney.

b. Masonry chimneys cannot be used for an air chase

c. B vent chimneys can only be used for an air chase (Vent options 20, 21) if the B vent has the minimum size shown in Table 7.13b and is fully accessible for sealing of all joints and seams.

d. When Vent Options 20, 21 are used, install a Tee of the same size at the base of the vent. Route the smooth section of InnoFlue Flex (3”) or Flex Adaptor (2”) through a cap in the base of this Tee. Use a Centrotherm IAWP2P or IAWP03B wall plate and RTV to seal this penetration. Install the Base Support using the Base support bracket as described in the InnoFlue installation manual.

Connection of the PVC air intake pipe to the side outlet of the tee is made using a cap and a PVC socket x male thread adaptor (2” or 3”, depending on the Vent Option). Cut a clearance hole in the cap for the male threads. Secure the adaptor to the cap using a 2” or 3” electrical conduit lock nut. Seal all joints with RTV.

I. Condensate Trap and Drain Line

All condensate which forms in the boiler or vent system passes through the heat exchanger and out of a bottom drain port which is connected to the condensate trap with a hose. This trap allows condensate to drain from the heat exchanger while retaining flue gases in the boiler. This trap is an integral part of the boiler but must be connected to a drain pipe as shown in Figure 7.47. A length of corrugated tubing is supplied with the boiler and is connected to the trap as shown in Figure 747. Note the following when disposing of the condensate:

1. If the corrugated condensate drain line must be extended, construct the extension from PVC or CPVC pipe. Insert the hose provided with the boiler into the end of the extension as shown in Figure 7.47.
2. Condensate is slightly acidic. Do not use metallic pipe or fittings in the condensate drain line. Do not route the drain line through areas that could be damaged by leaking condensate.
3. Some jurisdictions may require that the condensate be neutralized before being disposed of. Dispose of condensate in accordance with local codes.
4. Do not route, or terminate, the condensate drain line in areas subjected to freezing temperatures.
5. If the point of condensate disposal is above the trap, it will be necessary to use a condensate pump to move the condensate to the drain. In such cases, select a condensate pump that is approved for use with condensing boilers. If overflow from this pump would result in property damage, select a pump with an overflow switch and use this switch to shut down the boiler. Alternatively, if heat is a necessity, use the overflow switch to trigger an alarm.
6. Do not attempt to move the trap from the location shown in Figure 7.47. Do not attempt to substitute another trap for the one provided with the boiler.
7. The vent shown in Figure 7.47 must be left open for the trap to work properly.

WARNING

Asphyxiation Hazard. Failure to install the condensate drain in accordance with the above instructions could cause flue gas to enter the building, resulting in personal injury or death.

NOTICE

Boiler condensate is corrosive. Route condensate drain line in a manner such that any condensate leakage will not cause property damage.

Some jurisdictions may require that condensate be neutralized prior to disposal.

Use materials approved by the authority having jurisdiction.

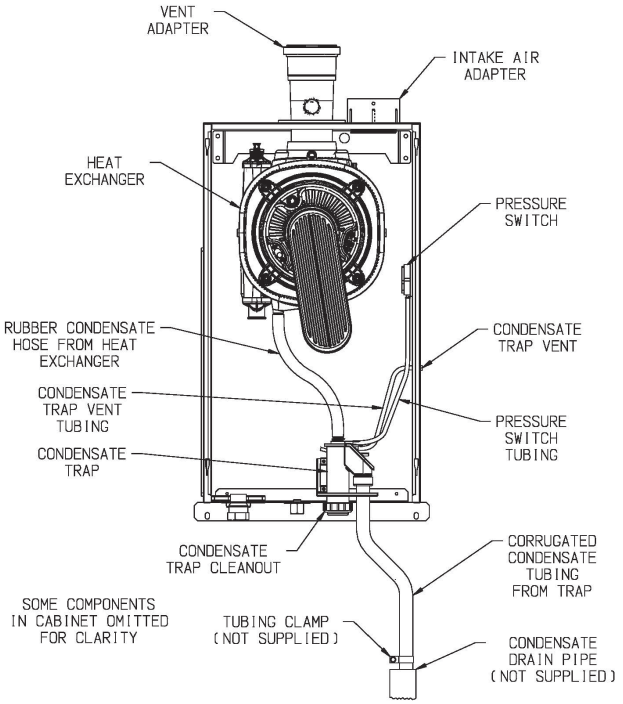

Figure 7.47: Condensate Piping Arrangement

J. Removing an Existing Boiler From a Common Chimney

This section only applies if this boiler is replacing an existing boiler that is being removed from a common chimney.

In some cases, when an existing boiler is removed from a common chimney, the common venting system may be too large for the remaining appliances. At the time of removal of an existing boiler, the following steps shall be followed with each appliance remaining connected to the common venting system placed in operation, while the other appliances remaining connected to the common venting system are not in operation.

(a) Seal any unused openings in the common venting system.

(b) Visually inspect the venting system for proper size and horizontal pitch and determine there is no blockage or restriction, leakage, corrosion and other deficiencies which could cause an unsafe condition.

(c) Insofar as practical, close all building doors and windows and all doors between the space in which all the appliances remaining connected to the common venting system are located and other spaces of the building. Turn on clothes dryers and any appliance not connected to the common venting system. Turn on any exhaust fans, such as range hoods and bathroom exhausts, so they will operate at maximum speed. Do not operate a summer exhaust fan. Close fireplace dampers.

(d) Place in operation the appliance being inspected. Follow the lighting instructions. Adjust thermostat so the appliance will operate continuously.

(e) Test for spillage at the draft hood relief opening after 5 minutes of main burner operation. Use the flame of a match or candle, or smoke from a cigarette, cigar, or pipe.

(f) After it has been determined that each appliance remaining connected to the common venting system properly vents when tested as outlined above, return doors, windows, exhaust fans, fireplace dampers and any other gas-burning appliances to their previous condition of use.

(g) Any improper operation of the common venting system should be corrected so the installation conforms with the National Fuel Gas Code, ANSI Z223.1. When re-sizing any portion of the common venting system, the common venting system should be re sized to approach the minimum size as determined using the appropriate tables in Part 11 of the National Fuel Gas Code, ANSI Z223.1.

WARNING

Never common vent this boiler with other appliances.

Au moment du retrait d'une chaudière existante, les mesures suivantes doivent être prises pour chaque appareil toujours raccordé au système d'evacuation commun et qui fonctionne alors que d'autres appareils toujours raccordés au système d'évacuation ne fonctionnent pas:

(a) Sceller toutes les ouvertures non utilisées du système d'évacuation.

(b) Inspecter de façon visuelle le système d'évcuation pour déterminer la grosseur et l'inclinaison horizontale qui conviennent et s'assurer que le système est exempt d'obstruction, d'étranglement, de fuite, de corrosion et autres défaillances qui pourraient présenter des risques.

(c) Dans la mesure du possible, fermer toutes les portes et les fenêtres du bâtiment et toutes les portes entre l'espace où les appareils toujours raccordés au système d'évacuation sont installés et les autres espaces du bâtiment. Mettre en marche les sécheuses, tous les appareils non raccordés au système d'évacuation commun et tous les ventilateurs d'extraction comme les hottes de cuisinière et les ventilateurs des salles de bain. S'assurer que ces ventilateurs fonctionnent à la vitesse maximale. Ne pas faire fonctionner les ventilateurs d'été. Fermer les registres des cheminées.

(d) Mettre l'appareil inspecté en marche. Suivre les instructions d'allumage. Régler le thermostat de façon que l'appareil fonctionne de façon continue.

(e) Faire fonctionner le brùleur principal pendant 5 min ensuite, déterminer si le coupe-tirage déborde à l'ouverture de décharge. Utiliser la flamme d'une allumette ou d'une chandelle ou la fumée d'une cigarette, d'un cigare ou d'une pipe.

(f) Une fois qu'il a été déterminé, selon la méthode indiquée ci-dessus, que chaque appareil raccordé au système d'évacuation est mis à l'air libre de façon adéquate. Remettre les portes et les fenêtres, les ventilateurs, les registres de cheminées et les appareils au gaz à leur position originale.

(g) Tout mauvais fonctionnement du système d'évacuation commun devrat être corrigé de façon que l'installation soit conforme au National Fuel Gas Code, ANSI Z223.1/NFPA 54 et (ou) aux codes d'installation CAN/CSA-B149.1. Si la grosseur d'une section du système d'évacuation doit être modifiée, le système devrait être modifié pour respecter les valeurs minimales des tableaux pertinents de l'appendice F du National Fuel Gas Code, ANSI Z223.1/NFPA 54 et (ou) des codes d'installation CAN/CSA-B149.1.

VIII. Gas Piping

WARNING

Explosion Hazard. Failure to properly pipe gas supply to boiler may result in improper operation or leaks of flammable gas.

- **Gas supply to boiler and system must be absolutely shut off prior to installing or servicing boiler gas piping.**
- **Always assure gas piping is absolutely leak free and of the proper size and type for the connected load.**
- **Use a thread compound compatible with liquefied petroleum gas. Failure to use proper thread compounds on all gas connectors may result in leaks of flammable gas.**
- **If inlet pressure is above 1/2 psig (3.4 kPa) an additional gas pressure regulator is required. Consult gas supplier.**
- **Size corrugated stainless steel tubing (CSST) to ensure proper capacity and minimize flow restrictions.**

Gas piping to the boiler must be sized to deliver adequate gas for the boiler to fire at the nameplate input at an inlet pressure between the minimum and maximum values shown in Table 8.2. When sizing, also consider other existing and expected future gas utilization equipment (i.e. water heater, cooking equipment). For more information on gas line sizing, consult the utility or the *National Fuel Gas Code,* NFPA54/ANSI Z223.1, and/or CAN/CSA B149.1 *Natural Gas and Propane Installation Code.*

Figure 8.1 shows typical gas piping connection to the boiler. A sediment trap must be installed upstream of all gas controls. Install the factory provided manual shut-off valve outside the jacket with a ground joint union as shown. All above ground gas piping upstream from manual shut-off valve must be electrically continuous and bonded to a grounding electrode. Refer to *National Electrical Code,* NFPA 70.

The boiler and its gas connection must be leak tested before placing the boiler in operation. When doing this, the boiler and its individual shut-off must be disconnected from the rest of the system during any pressure testing of that system at pressures in excess of 1/2 psi (3.5kPa). When pressure testing the gas system at pressures of 1/2 psi (3.5kPa) or less, isolate the boiler from the gas supply system by closing its individual manual shut-off valve. Locate leaks using approved combustible gas non-corrosive leak detector solution.

DANGER

Explosion Hazard. Do not use matches, candles, open flames or other ignition source to check for leaks.

WARNING

If gas pressure in the building is above ½ psig (3.4 kPa), an additional gas pressure regulator is required. Using one additional regulator for multiple gas appliances may result in unsafe boiler operation. The additional regulator must be able to properly regulate gas pressure at the input of the smallest appliance. If the regulator can not do this, two or more additional regulators are required. Consult regulator manufacturer and/or local gas supplier for instructions and equipment ratings.

CAUTION

Support the weight of the gas line piping independently from the boiler gas connection fitting located on the bottom of the boiler.

If an additional regulator is used to reduce boiler inlet pressure below 1/2 psig (3.4 kPa) it must be at least 6 to 10 ft. upstream of the boiler.

It is very important that the gas line is properly purged by the gas supplier or utility company.

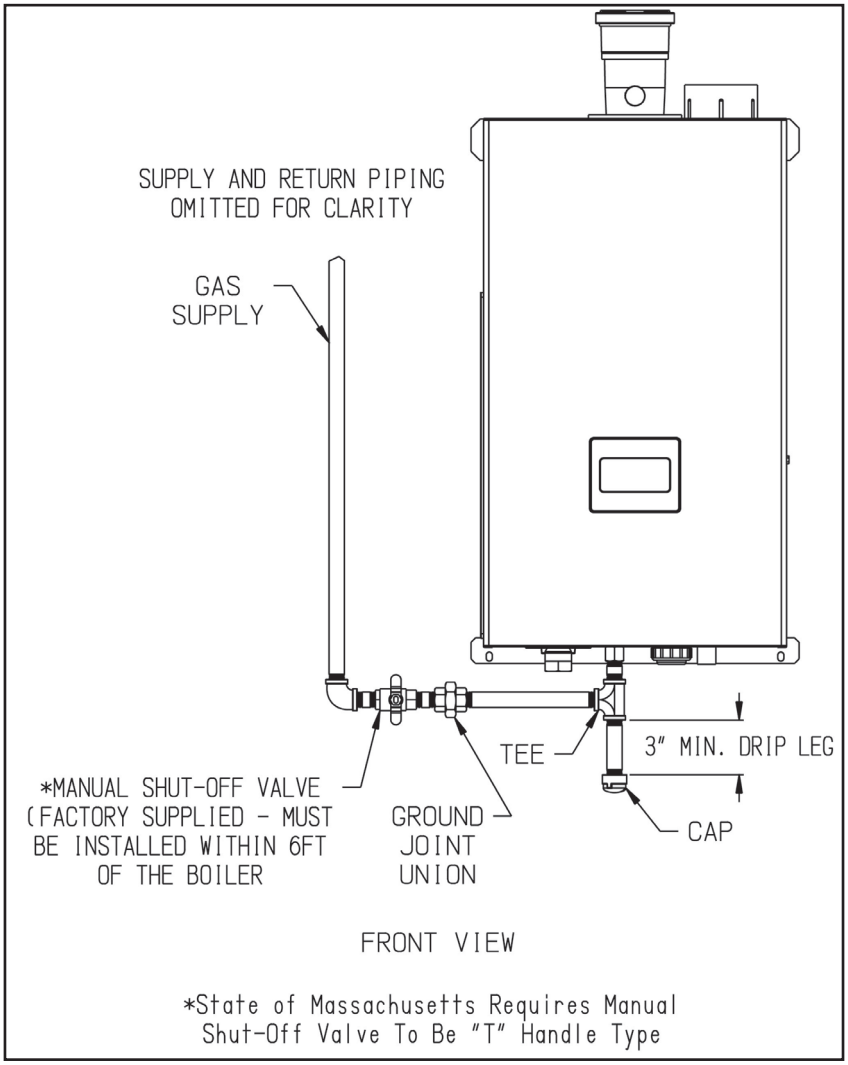

Figure 8.1: Gas Connection to Boiler

Table 8.2: Minimum and Maximum Inlet Pressures

Model	Max. (Natural & LP)	Min. (Natural)	Min. (LP)
K2-080	14.0”	2.5”	11.0”
K2-100	14.0”	2.5”	11.0”
K2-120	14.0”	2.5”	11.0”
K2-150	14.0”	2.5”	11.0”
K2-180	14.0”	2.5”	11.0”

IX. System Piping

A. General System Piping Precautions

WARNING

Failure to properly pipe boiler may result in improper operation and damage to boiler or structure.

Install boiler so that the gas ignition system components are protected from water (dripping, spraying, rain, etc.) during boiler operation and service (circulator replacement, etc.).

Oxygen contamination of boiler water will cause corrosion of iron and steel boiler components and can lead to boiler failure. Warranty does not cover problems caused by oxygen contamination of boiler water or scale (lime) build-up caused by frequent addition of water.

WATER QUALITY AND BOILER WATER ADDITIVES
IMPORTANT NOTE

The heat exchanger used in this boiler is made from stainless steel coils having relatively narrow waterways. Once filled with system water, it will be subjected to the effects of corrosion, as well as fouling from any debris introduced from the system. Take the following precautions to minimize the chance of severe heat exchanger damage caused by corrosion and/or overheating:

1 Flush the system before connecting the boiler - In a replacement installation, flushing the system will remove impurities, such as sediment, solder flux, metal shavings, and traces of old boiler additives. Even if the system is new, do not omit this step – new systems will contain flux and may even contain some of the other impurities listed above. Flush the system completely and repeat if necessary to completely remove these contaminants. If necessary, a cleaning agent may be used to assist in system cleaning. See Section XI (“Start-up and Check-out”) for recommended cleaners.

2. Make sure that the system is tight - This is the single most important guideline. Tap water contains dissolved oxygen which causes corrosion. In a tight system, this oxygen comes out of solution and is quickly removed from the system through the automatic air vent. The system then remains essentially free of oxygen. If the system is not tight, however, frequent additions of make-up water can expose the heat exchanger to oxygen on a continuous basis. In addition, frequent additions of hard make-up water can cause calcium deposits to collect in the heat exchanger, causing severe damage. To minimize additions of make-up water:

   - Inspect the system thoroughly for leaks before placing it in service.
   - If the system includes underground piping, or other piping in which a leak might go undetected, consider isolating the boiler from the system with a heat exchanger.
   - Make sure that the expansion tank is properly sized and in good condition. If it is not, the relief valve may open frequently, resulting in regular additions of make-up water.
   - If an automatic fill valve is installed, installation of a water meter in the fill line is strongly recommended so that routine additions of make-up water can be detected and their cause corrected.

3. Non-Metallic Tubing - Even if the system is tight, oxygen can be introduced into the system through some types of non-metallic tubing used in radiant or snow melt systems. Other nonmetallic tubing is equipped with an oxygen barrier to prevent migration of oxygen into the water. If the boiler is to be installed in a system containing non-metallic tubing without an oxygen barrier, it must be isolated from the boiler with a heat exchanger as shown in Figure 9.10.

4. Water Chemistry, Antifreeze, and Boiler Water Additives – Improper boiler water chemistry can cause the heat exchanger damage described above, as well as deterioration of seals. Observe the water chemistry requirements shown in Section XI (“Start-up and Check-out”).

B. Near Boiler Piping Design

Proper operation of this boiler requires that the water flow rate through it remain within the limits shown in Table 9.1 any time the boiler is firing. At flow rates below the minimum shown, the boiler's flow switch and/or temperature rise limit function may prevent the boiler from firing. Flow rates through the boiler in excess of the maximum shown in Table 9.1 can result in excessive noise or erosion damage to piping

There are two basic methods that can be used to pipe this boiler into the system. Method #1 (primary-secondary piping) is always preferred. Additional information on hydronic system design can be found in the *I=B=R* Guide RHH published by the Air-Conditioning, Heating and Refrigeration Institute (AHRI).

Table 9.1: Flow Limitations

Model	Flow (GPM)	
	Minimum	Maximum
K2-080	5.0	13.3
K2-100	5.1	13.3
K2-120	6.2	13.3
K2-150	7.7	13.3
K2-180	9.3	13.3

Method 1: Primary/Secondary Piping (Strongly Recommended)

This method can be used in heat-only applications as shown in Figure 9.2 and 9.2a or with an indirect water heater as shown in Figure 9.3a or 9.3b. In this system, the flow rate through the boiler ("secondary loop") is completely independent of the flow rate through the system ("primary loop"). Use the following guidelines to ensure that the boiler will have the required flow shown in Table 9.1 regardless of the flow in the heating system.

1) System Loop Piping - Size the system circulator and piping to obtain the design flow rate through the heating system as you would on any other heating system. All piping between the expansion tank and secondary connection tees must be at least 1". In order to keep the flow rates in the system and boiler loops independent of each other, provide at least 8 diameters of straight pipe upstream of the first tee and 4 diameters downstream of the second tee. Keep the distance between the expansion tank and the first secondary tee as short as practical.
2) Boiler Loop Piping – All boilers are supplied with a built in circulator which will deliver the flow required by Table 9.1 provided both of the following conditions are met:

- All piping in the boiler loop has a nominal size of at least 1"
- The equivalent length of all piping in the boiler loop is 60 ft or less.

To verify that the 60 ft, equivalent length is not exceeded, do the following:

a) Count all fittings in the planned boiler loop (the shaded piping in Figure 9.6). In doing so, do not count the secondary connection tees, unions, or the fittings supplied with the boiler (these have already been accounted for).
b) Using Table 9.4, find the equivalent lengths of all fittings in the secondary loop. Total these equivalent lengths and add them to the total length of planned straight pipe in the secondary loop.
c) The result is the total equivalent length of the planned boiler loop. If the equivalent length calculated in (b) is under the limit shown in Table 9.5, the boiler pump will achieve a flow rate and temperature rise approximately equal to that shown in this table. Otherwise, the equivalent length must be reduced.

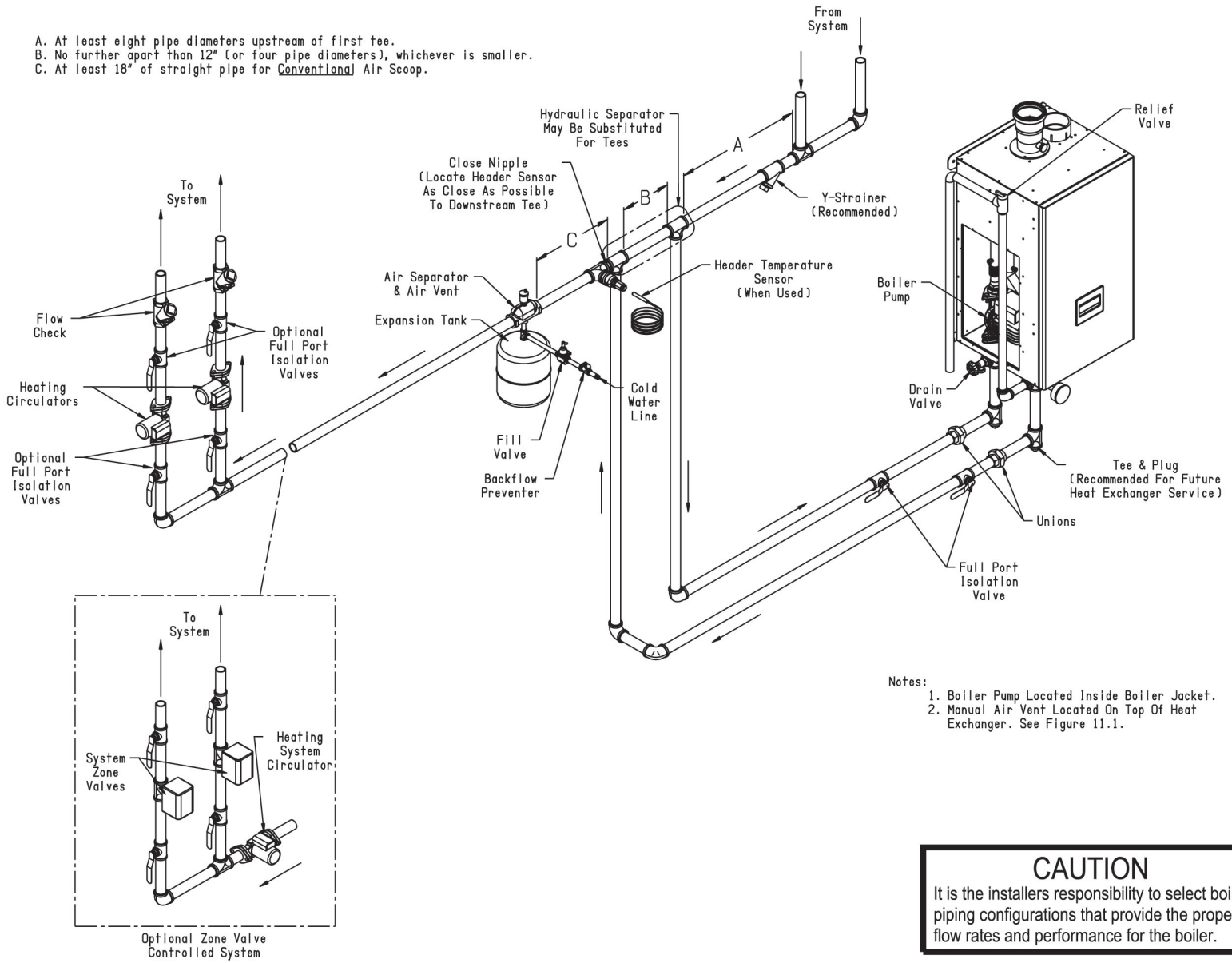

CAUTION

It is the installers responsibility to select boiler piping configurations that provide the proper flow rates and performance for the boiler.

Figure 9.2: Piping Method #1 - Near Boiler Piping - Heating Only

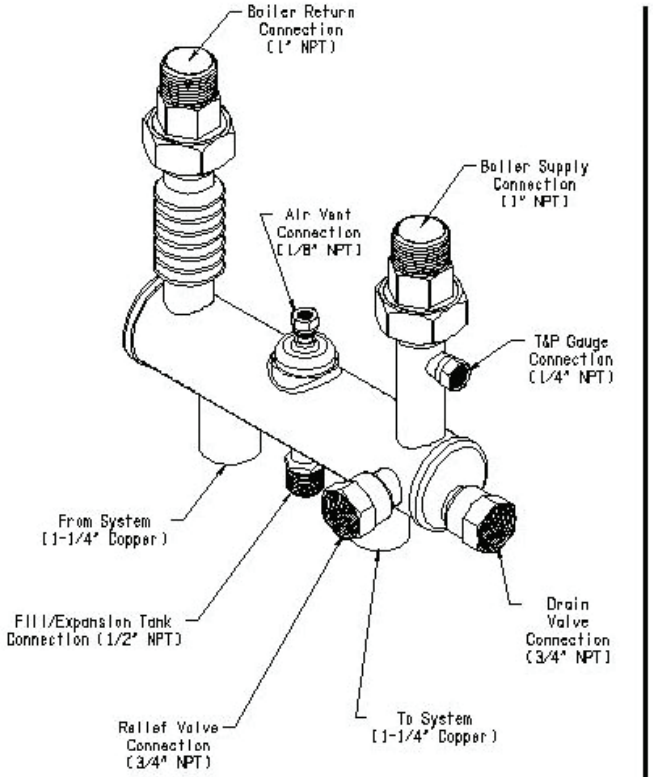

PRIMARY / SECONDARY HEADER CONNECTIONS

PRIMARY/SECONDARY HEADER INSTALLATION
106259-01 - Sizes 080 - 120
106259-02 - Sizes 150 & 180

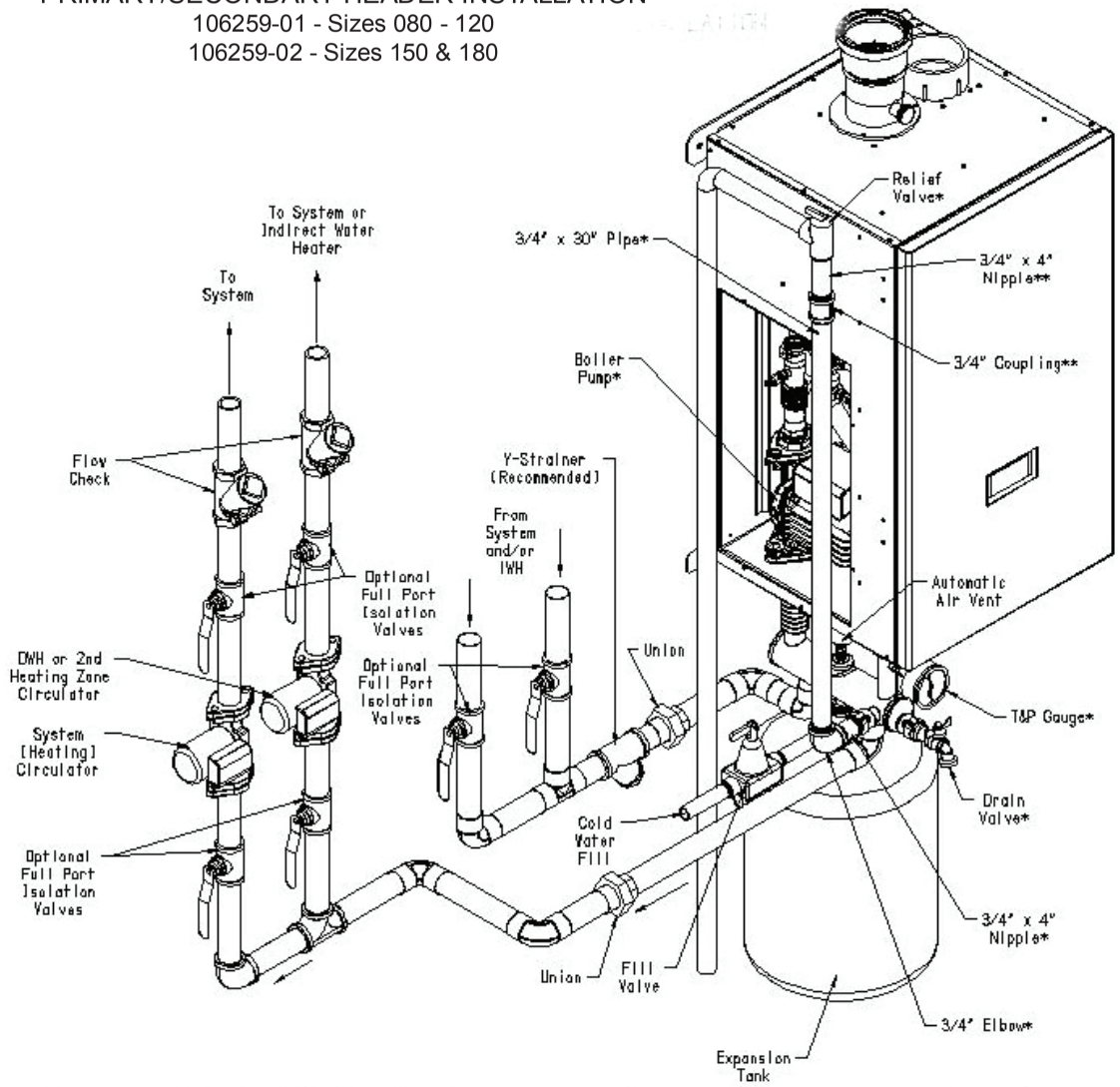

CAUTION

- Application of excessive heat during soldering could damage the union gaskets or brazed joints on the Primary\ Secondary Header. Replacement gasket PN: 106061-01
- It is the installers responsibility to select piping configurations that will provide the proper flow rates through the system.

Notes:

1. Refer to the boiler installation manual for additional piping and water quality requirements.
2. Piping supports not shown. Provide supports for relief valve and system piping to minimize the load placed on the Primary/Secondary Header connections.
3. Components marked (*) are supplied with the boiler. All other components are supplied by the installer.
4. 3/4" coupling and 3/4" x 4" nipple marked (**) are supplied by the installer and are required to locate the relief valve above the boiler heat exchanger as required by ASME Section IV.

Figure 9.2a: Piping Method #1 - Near Boiler Piping with K2 FastPipe™ Primary/Secondary Header - Heating Only

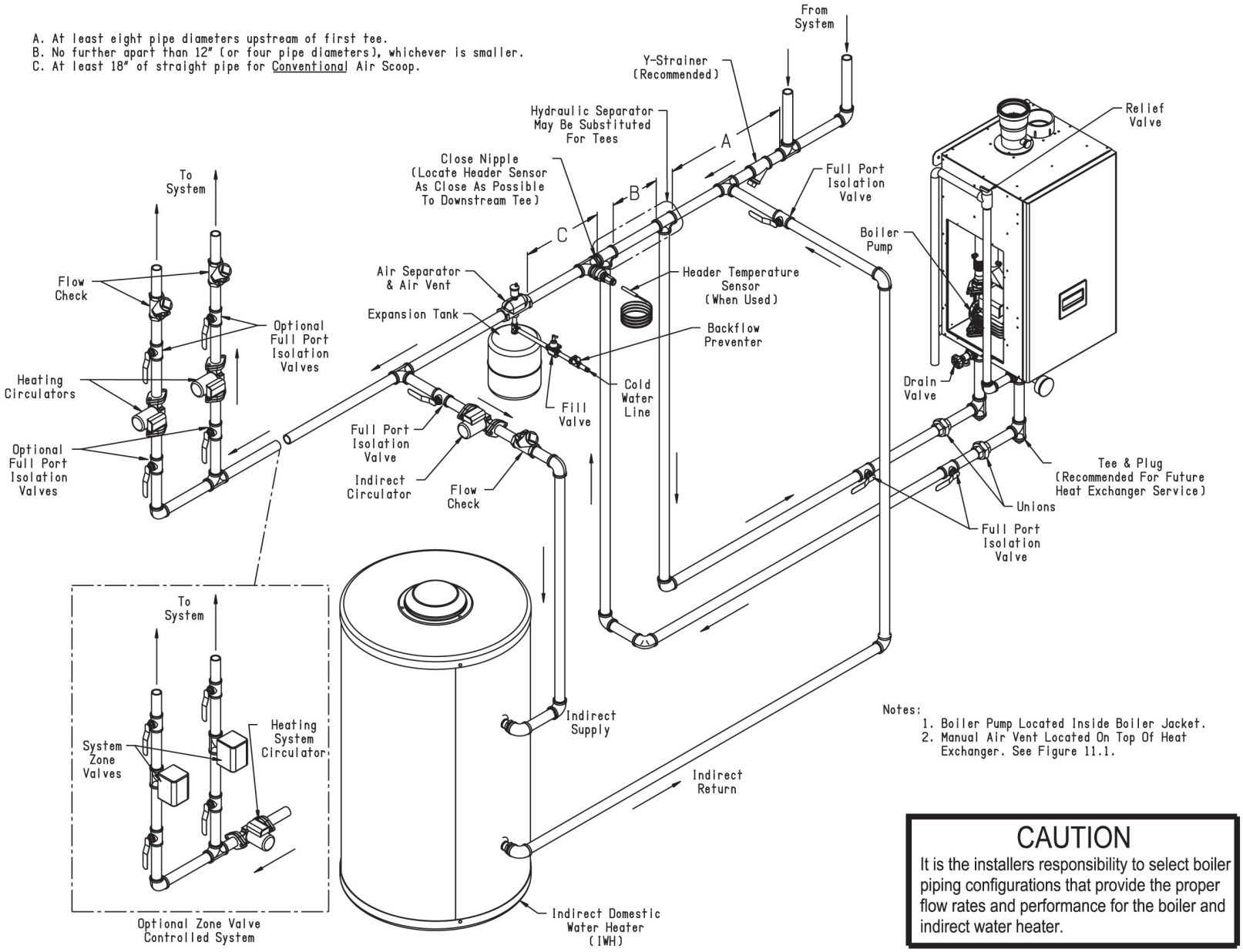

Figure 9.3a: Piping Method #1 - Near Boiler Piping - Heating Plus Indirect Water Heater

IX. System Piping (continued)

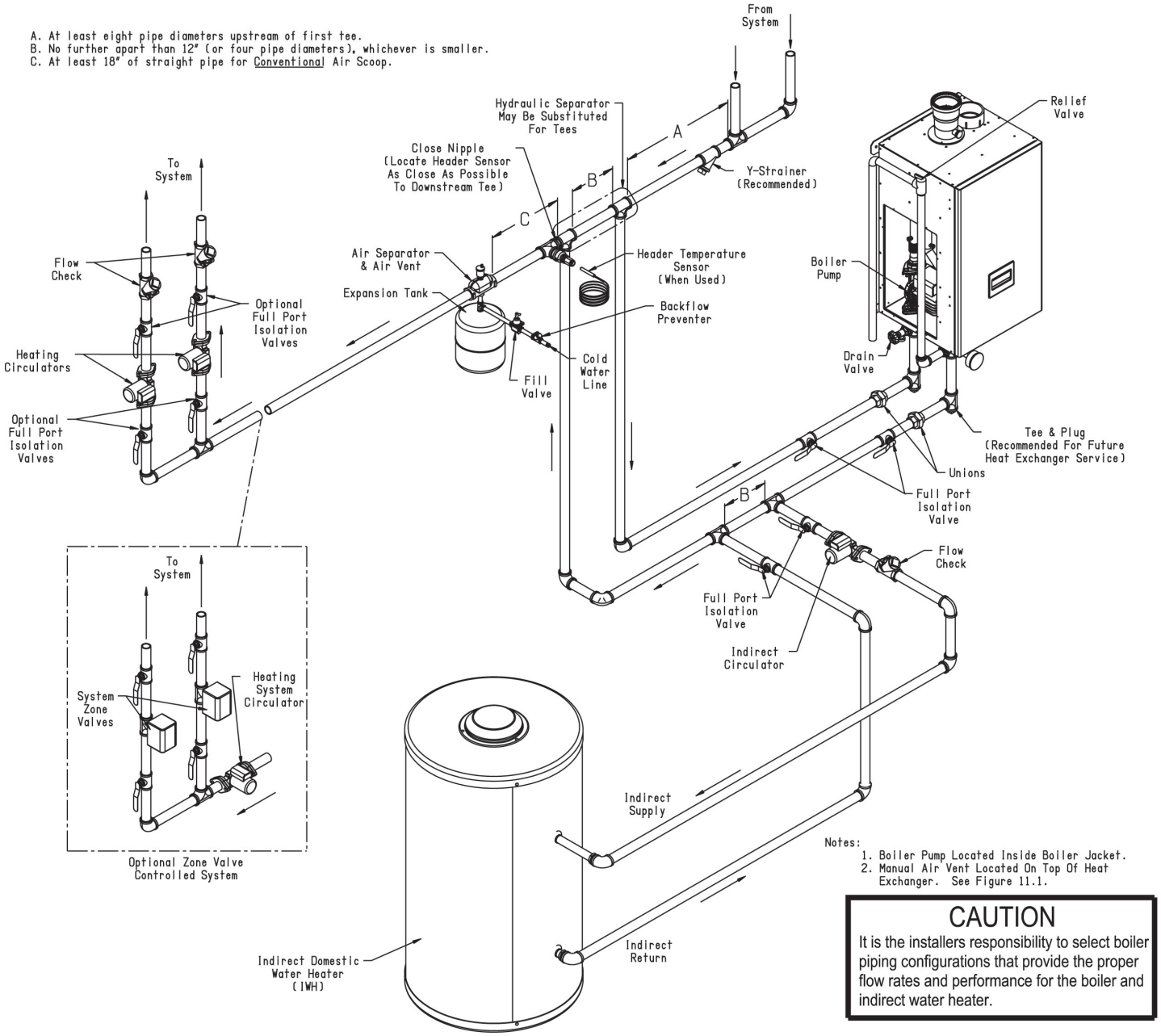

Figure 9.3b: Piping Method #2 - Near Boiler Piping - Heating Plus Indirect Water Heater

Example – A 120MBH model is to be connected to a heating system as shown in Figure 9.6. A total of 20 ft of straight pipe will be installed between the boiler and the system loop.

Count all fittings in the boiler loop (shaded in Figure 9.6):

3 90° Elbows

2 Turn in Tee (under boiler- primary-secondary tees not counted)

2 Isolation Valves

1 Y Strainer having a Cv of 30.

Note: Unions, Secondary Connection Tees, and factory supplied fittings are ignored.

Calculate total equivalent length from Table 9.4:

20 ft Straight Pipe + 3 Elbows x 2.8 + 2 Turn in Tee x 5.5 + 2 Valves x 0.6 + 1 Y Strainer x 7.0 = 40.6 Equivalent Feet

Since the total equivalent length is less than 60 ft, flow through boiler loop meets requirements in Table 9.1

3) Indirect Water Heater Loop Piping – If an indirect water heater is used, install it as shown in Figure 9.3a or 9.3b. Refer to the indirect water heater installation manual for the proper sizing the indirect water heater loop pump and piping.

4) Hydraulic Separators – Hydraulic separators serve the same purpose as the closely spaced tees connecting the boiler and system loops in Figure 9.2. They also generally provide effective connection points for automatic air elimination devices and an expansion tank. These separators are available from several sources and may be used in place of the closely spaced tees shown in Figure 9.2, 9.3a or 9.3b. When a hydraulic separator is used in place of the tees, the 60 ft equivalent length limitation still applies. Select a hydraulic separator having 1” or larger boiler connections that is designed for the boiler flow rates shown in Table 9.1.

Table 9.4: Equivalent Lengths for Selected Valves and Fittings

(May Be Used for Copper or Threaded Fittings)

Fitting	Pipe Size	Equivalent Length (ft)
90° Elbow	1”	2.8
45° Elbow	1”	1.4
90° Turn in Tee	1”	5.5
Run of Tee	1”	1.8
Gate Valve (Open)	1”	0.7
Full Port Ball Valve	1”	0.7
Y-Strainer*	1”	7.0

* Based on Cv of 20. Pressure drop through strainers varies widely. 7 ft equivalent length may be assumed for strainers having a published Cv greater than 20.

Table 9.5a: Flow Available with Boiler Loop Equivalent Length of 30 ft or Less *

Boiler Model	Approx. Flow (GPM)	Approx. Rise (°F)
K2-080	7.5	19
K2-100	8.3	22
K2-120	9.6	22
K2-150	12.9	21
K2-180	12.9	25

Table 9.5b: Flow Available with Boiler Loop Equivalent Length of 60 ft or Less *

Boiler Model	Approx. Flow (GPM)	Approx. Rise (°F)
K2-080	7.3	20
K2-100	8.0	23
K2-120	9.2	24
K2-150	11.9	23
K2-180	11.9	27

* For multi-speed pumps, these tables assume pump is set to highest speed.

IX. System Piping (continued)

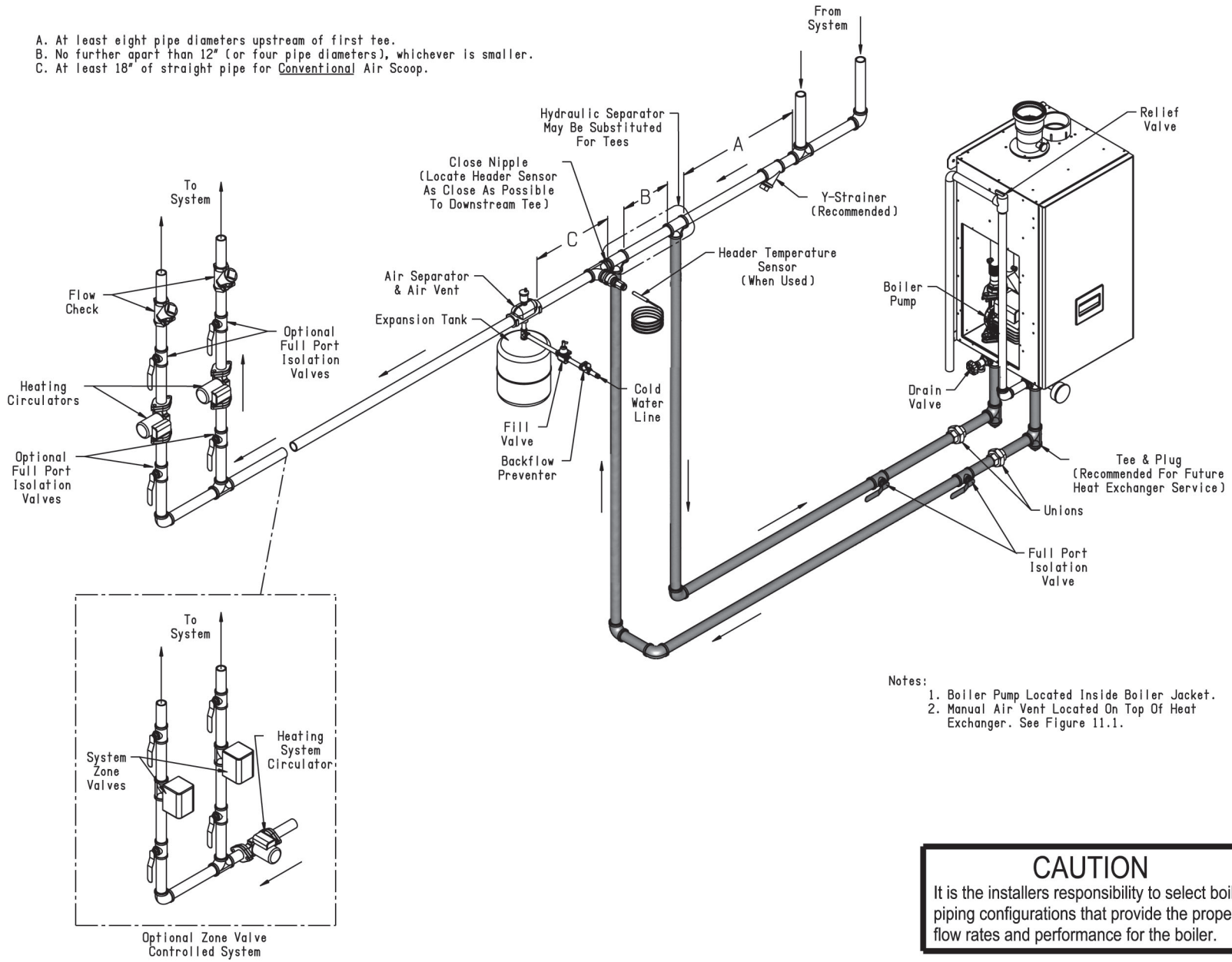

CAUTION

It is the installers responsibility to select boiler piping configurations that provide the proper flow rates and performance for the boiler.

Figure 9.6: Piping Method #1 - Near Boiler Piping - Shaded Boiler Loop

Method 2: Direct Connection to Heating System (Generally NOT Recommended)

In some relatively rare cases it may be possible to connect this boiler directly to the heating system as is done with conventional boilers (Figure 9.7). If this is done, the flow rate through the boiler will equal the flow rate through the system. The flow rate through the system must therefore always remain within the limits shown in Table 9.1. For this reason, the pressure drop through the entire system must be known.

This method is generally not recommended because it is often very difficult to accurately calculate the pressure drop through the system. In replacement installations, it may be impossible to get an accurate measurement of the amount of piping and number of fittings in the system. In addition, if the system is zoned, the system flow may drop well below the minimum required when only one zone is calling for heat.

The one advantage to this method is its installation simplicity. It may make sense to use this method when the boiler is to be installed with a new single zone system having a low-pressure drop.

Figure 9.8 shows the performance curve for the pump in each boiler model, taking into account the pressure drop through the boiler's heat exchanger and internal piping. These curves therefore show the flow that can be achieved through the boiler as a function of the pressure drop through the connected piping. Calculation of the system pressure drop must be performed by someone having familiarity with pressure drop calculations, such as an HVAC engineer.

NOTICE

Where it is not possible to install a separate boiler loop, the system circulator must be sized to ensure that the flow through the boiler stays within the defined parameters to prevent overheating when the boiler is fired at it's full rated input. Install a flow meter to measure the flow, or fire the boiler at full rate and ensure the boiler delta T does not exceed 35°F (19°C).

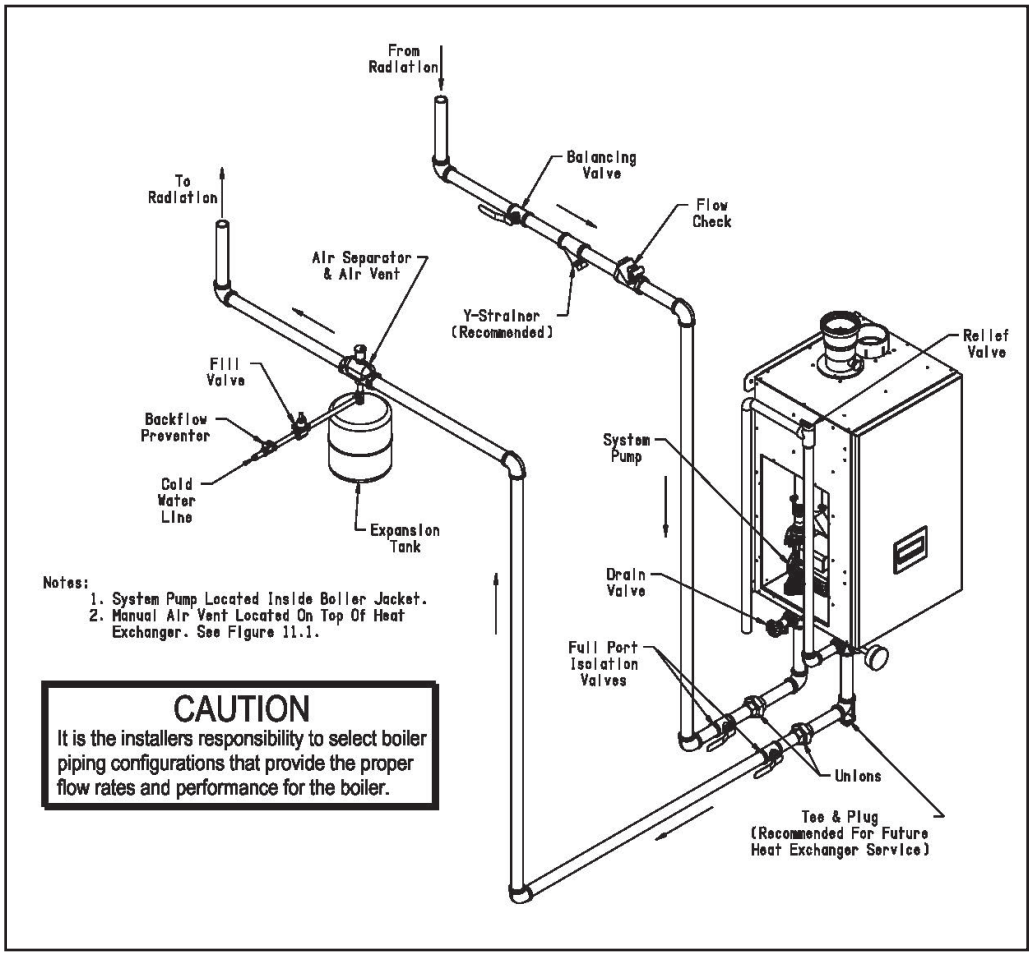

Figure 9.7: Piping Method #2 - Direct Connection of Boiler to Heating System

Note: These curves show the flow that can be achieved through the boiler as a function of the pressure drop through the connected piping.

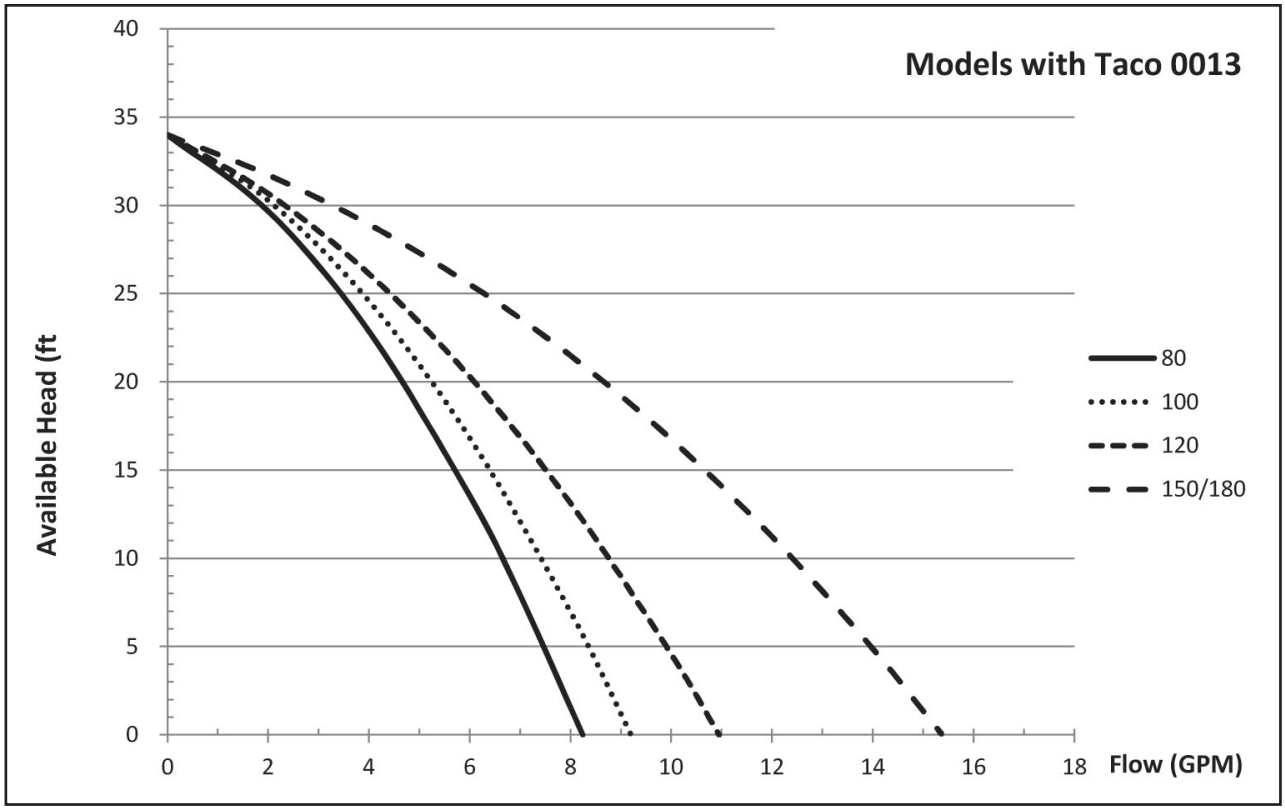

Figure 9.8a: Taco Net Circulator Performance Curve

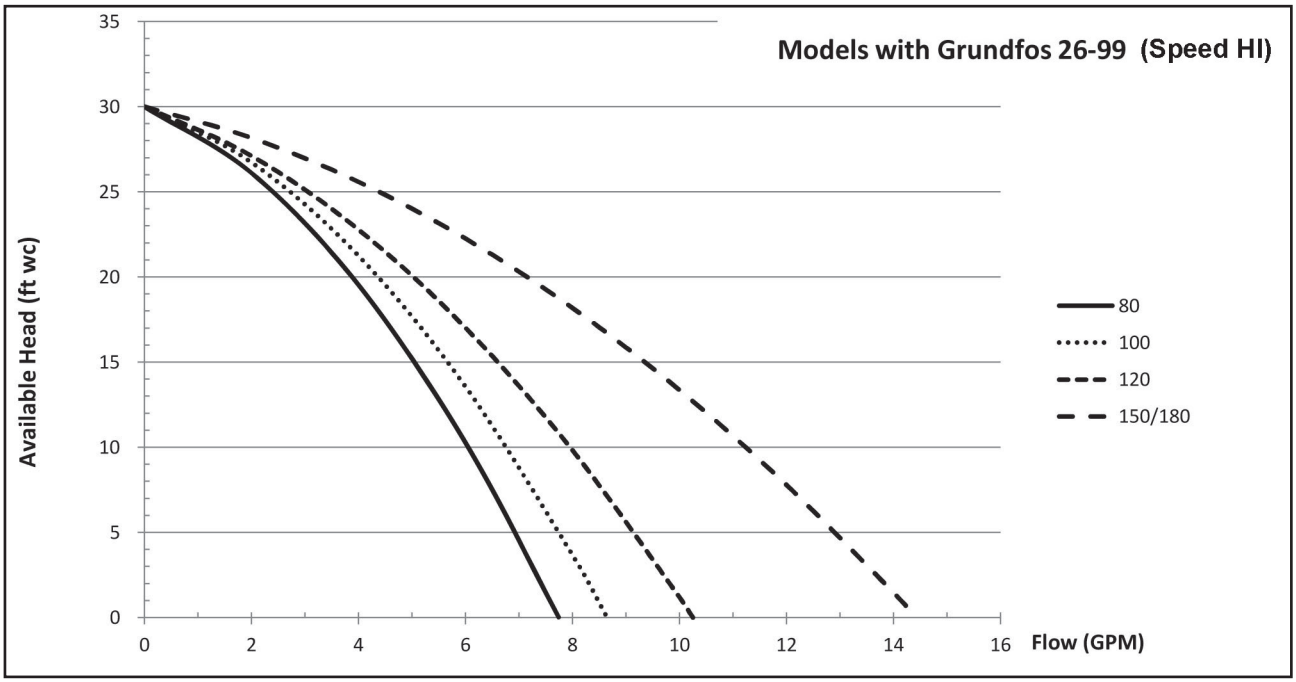

Figure 9.8b: Grundfos Net Circulator Performance Curve
Note: Must use Speed HI to achieve the flow requirement shown in Table 9.1

C. Standard Piping Installation Requirements

Observe the following requirements when installing the boiler piping:

1) Relief Valve (Required) – The relief valve is shipped loose and must be installed in the location shown in Figure 9.9, using the side outlet Tee and other fittings provided. ASME Section IV currently requires that this relief valve be installed above the heat exchanger as shown. Pipe the outlet of the relief valve to a location where water or stream will not create a hazard or cause property damage if the valve opens. The end of the discharge pipe must terminate in unthreaded pipe. If the relief valve discharge is not piped to a drain, it must terminate at least 6" above the floor. Do not run the discharge piping through an area that is prone to freezing. The termination of the relief valve must be in an area where it is not likely to become plugged by debris.

The relief valve supplied with the boiler is set to open at 30 psi. If it is replaced, the replacement must have a setting less than or equal to the maximum allowable working pressure (MAWP) shown on the ASME data plate located on the left side of the heat exchanger behind the service access panel (Figure 9.9).

DANGER

Explosion / Scald Hazard.

Pipe relief valve discharge to a location where the potential of severe burns is eliminated.

Do not install a relief valve having a setting greater than the MAWP shown on the rating plate.

Do not install a valve in the relief valve discharge line.

Do not install relief valve in a location other than that specified by the factory.

Do not plug the relief valve discharge.

2) Gauge (Required) - Indicates supply water pressure and temperature. This gauge is shipped loose. Install it as shown in Figure 9.9.
3) Circulator (required) – The boiler loop circulator is factory installed inside the boiler cabinet. Usually at least one addition circulator (not supplied) will be required for the system to work properly. See the previous section for more information.
4) Expansion Tank (required) – If this boiler is replacing an existing boiler with no other changes in the system, the old expansion tank can generally be reused. If the expansion tank must be replaced, consult the expansion tank manufacturer's literature for proper sizing.
5) Fill Valve (required) – Either a manual or automatic fill valve may be used, but a manual valve is preferred because it eliminates unmonitored additions of make-up water to the system. The ideal location for the fill valve is at the expansion tank.
6) Automatic Air Vent (required) – At least one automatic air vent is required. Manual air vents will usually be required in other parts of the system to remove air during initial fill.
7) Manual Reset High Limit (required by some codes) - This control is required by ASME CSD-1 and some other codes. Install the high limit in the boiler supply piping just above the boiler with no intervening valves. Set the manual reset high limit to 200°F. Wire the limit per Figure 10.3 in the Wiring section.
8) Isolation Valves (recommended) - Isolation valves are useful when the boiler must be drained, as they will eliminate having to drain and refill the entire system.
9) Strainer (recommended) – Install a Y Strainer, or other suitable strainer, to prevent any system debris from entering the boiler and fouling the water passages. Note that some strainers have a significant pressure drop, which may impact the ability of the boiler pump to obtain the required flow. See Paragraph B of this section for additional information.

10) Drain Valve (required) – Install the drain valve supplied as shown in Figure 9.9.

11) Low Water Cut-off (may be required by local jurisdiction) – Protection of this boiler against low water and/or inadequate flow is provided by the UL353 certified flow switch built into the boiler. This is a water tube boiler and this flow switch is therefore the only effective way to provide such protection. Section HG614(c) of the 2013 ASME boiler and Pressure Vessel Code recognizes the use of a listed flow switch in lieu of a low water cut-off on water tube boilers.

In the event that a local jurisdiction insists upon the installation of a low water cut-off with this boiler, a Low Water Cut-off Kit (P/N 105591-01) is available that plugs into the low voltage circuit board (refer to Section X and LWCO Instruction Sheet for LWCO location and electrical connection). Install the low water cut-off in the supply piping at the point prescribed the local jurisdiction (generally at a point above the boiler).

If a probe type low water cut-off is used, be certain that it is located at a point in the piping from which air can escape to an automatic air vent. Generally, this means that there should be no down-turns in the piping between the low water cut-off and the point where the automatic air vent is installed. Failure to do this may result in nuisance boiler shut-downs due to small amounts of air trapped around the probe.

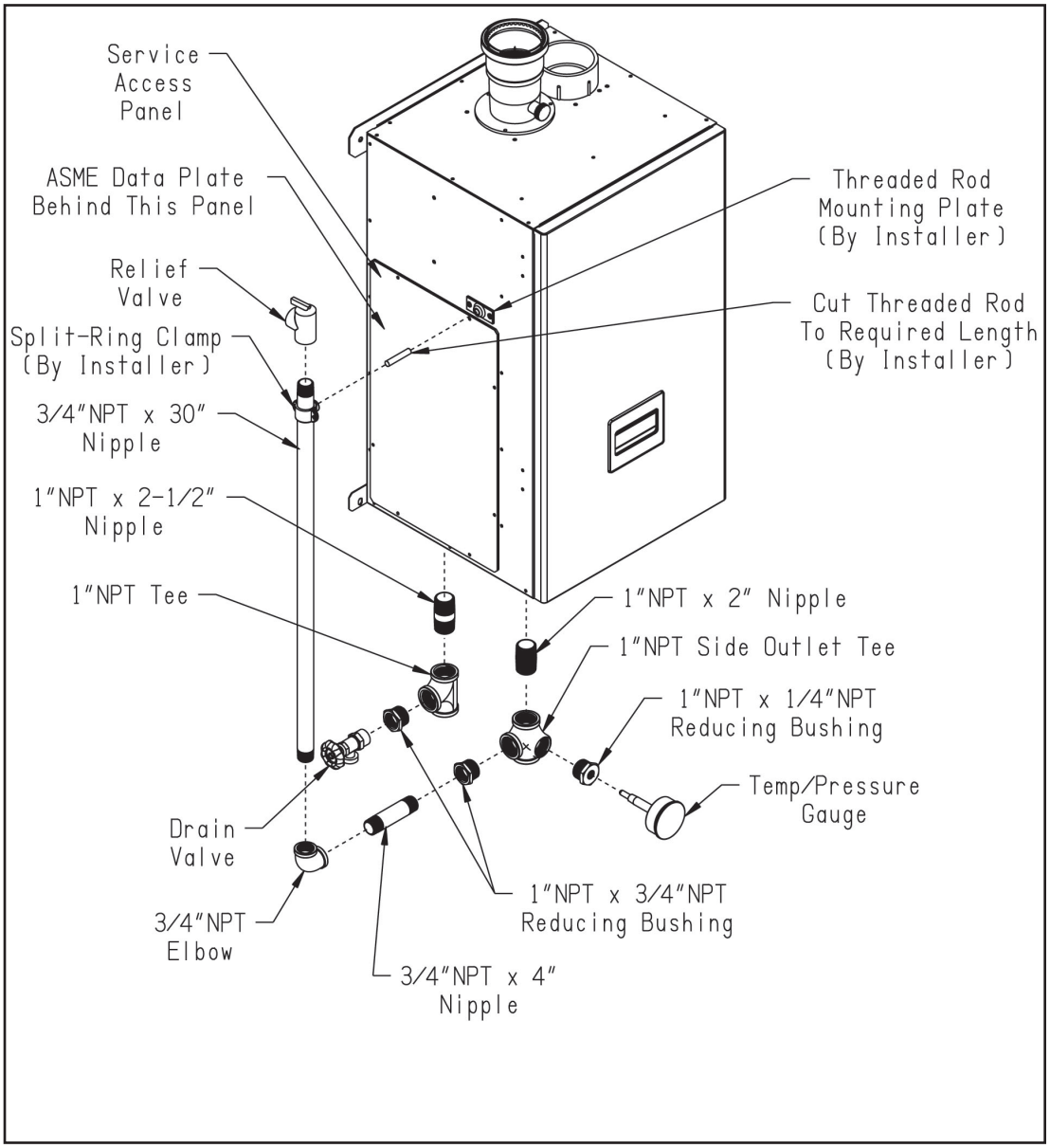

Figure 9.9: Factory Supplied Piping and Trim installation

D. Piping for Special Situations

1) Systems containing oxygen - Many hydronic systems contain enough dissolved oxygen to cause severe corrosion damage to a this boiler. Some examples include:

   - Radiant systems that employ tubing without an oxygen barrier.
   - Systems with routine additions of fresh water.
   - Systems which are open to the atmosphere.

   If the boiler is to be used in such a system, it must be separated from the oxygenated water being heated with a heat exchanger as shown in Figure 9.10. Consult the heat exchanger manufacturer for proper heat exchanger sizing as well as flow and temperature requirements. All components on the oxygenated side of the heat exchanger, such as the pump and expansion tank, must be designed for use in oxygenated water.

2) Piping with a Chiller - If the boiler is used in conjunction with a chiller, pipe the boiler and chiller in parallel. Use isolation valves to prevent chilled water from entering the boiler.

3) Air Handlers - Where the boiler is connected to air handlers through which refrigerated air passes, use flow control valves in the boiler piping or other automatic means to prevent gravity circulation during the cooling cycle.

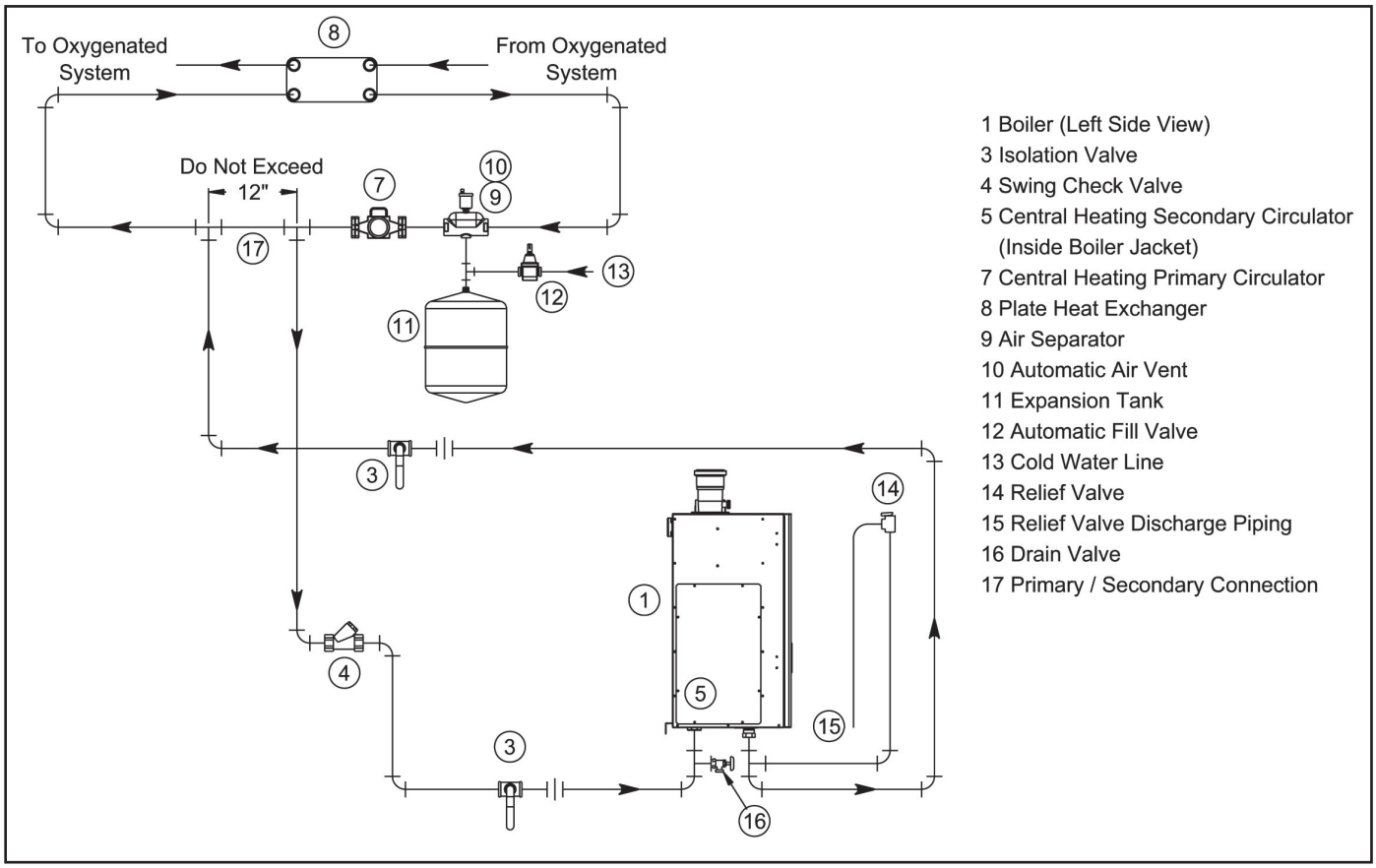

Figure 9.10: Isolation of the Boiler from Oxygenated Water with a Plate Heat Exchanger

X. Wiring

DANGER

Electrical Shock Hazard. Positively assure all electrical connections are unpowered before attempting installation or service of electrical components or connections of the boiler or building. Lock out all electrical boxes with padlock once power is turned off.

WARNING

All wiring and grounding must be done in accordance with the authority having jurisdiction or, in the absence of such requirements, with the National Electrical Code /NFPA 70). In Canada, all wiring and grounding must be done in accordance with the Canadian Electrical Code, Part 1 (CSA C22.1 - latest edition).

Failure to properly wire electrical connections to the boiler may result in serious physical harm.

Electrical power may be suppled from more than one circuit. Make sure all power is off before attempting any electrical work.

Each boiler must be protected with a properly sized over-current device.

Never jump out or make inoperative any safety or operating controls.

The wiring diagrams contained in this manual are for reference purposes only. Each boiler is shipped with a wiring diagram attached to the front door. Refer to this diagram and the wiring diagram of any controls used with the boiler. Read, understand and follow all wiring instructions supplied with the controls.

NOTICE

This boiler is equipped with a listed high water temperature limit function. This limit provides boiler shutdown in the event the boiler water temperature exceeds the set point of the limit control. Certain Local Codes require an additional water temperature limit. If necessary, install an additional water temperature limit such as a Honeywell L4006 Aquastat. Wire as indicated in Figure 10.3.

Figure 10.1 shows the location of both the high voltage and low voltage printed circuit boards with terminal strips for field wiring. To access the PCB's, first remove the sheet metal screw used to secure the wiring compartment cover and then lift out the cover.

1) Line Voltage (120 VAC) Field Connections – See Figure 10.2 for line voltage connections. Provide a dedicated circuit for the boiler of 15A or greater. A service switch is recommended and is required by many local codes. Locate this switch in accordance with local codes or, in the absence of any, in a location where it can be safely accessed in an emergency involving the boiler. All 120VAC connections to the boiler itself are made on the terminal strip on the high voltage PCB located on the left side if the wiring compartment. From top to bottom, the connections on the terminal strip are:

- 120VAC Hot
- 120VAC Neutral
- Ground
- System Pump Hot
- System Pump Neutral
- DHW Pump Hot
- DHW Pump Neutral

The use of the pump outputs are as follows:

a) System Pump - Pumps water through the radiation. This pump is hydraulically separated from the boiler pump, either by closely spaced tees, or by a hydraulic separator. The system pump is always on when the system is responding to a call for CH. Depending on the DHW configuration, it may also be on during a call for DHW.

b) DHW Pump (“IWH Circulator”) - Pumps water directly through the indirect water heater.

Maximum combined current draw for all circulators is 6.3 FLA. See Section XII of this manual for information on setting up the pump operation.

2) Low Voltage Connections – Low voltage field connections on the low voltage PCB are shown in Figure 10.3 and are listed from top to bottom:

- Heat T’Stat - 24VAC heating thermostat (R - 24V “Hot”)
- Heat T’Stat - 24VAC heating thermostat (W - Energized or Call for Heat)
- Heat T’Stat - 24VAC heating thermostat (C - 24V Common)
- DHW Stat - 24VAC domestic hot water thermostat (1)
- DHW Stat - 24VAC domestic hot water thermostat (2)
- External Limit - Field supplied low voltage safety limit contacts (1)
- External Limit - Field supplied low voltage safety limit contacts (2)
- Alarm Contact (1)
- Alarm Contact (2)
- EnviraCOM Device (D)
- EnviraCOM Device (R)
- EnviraCOM Device (C)

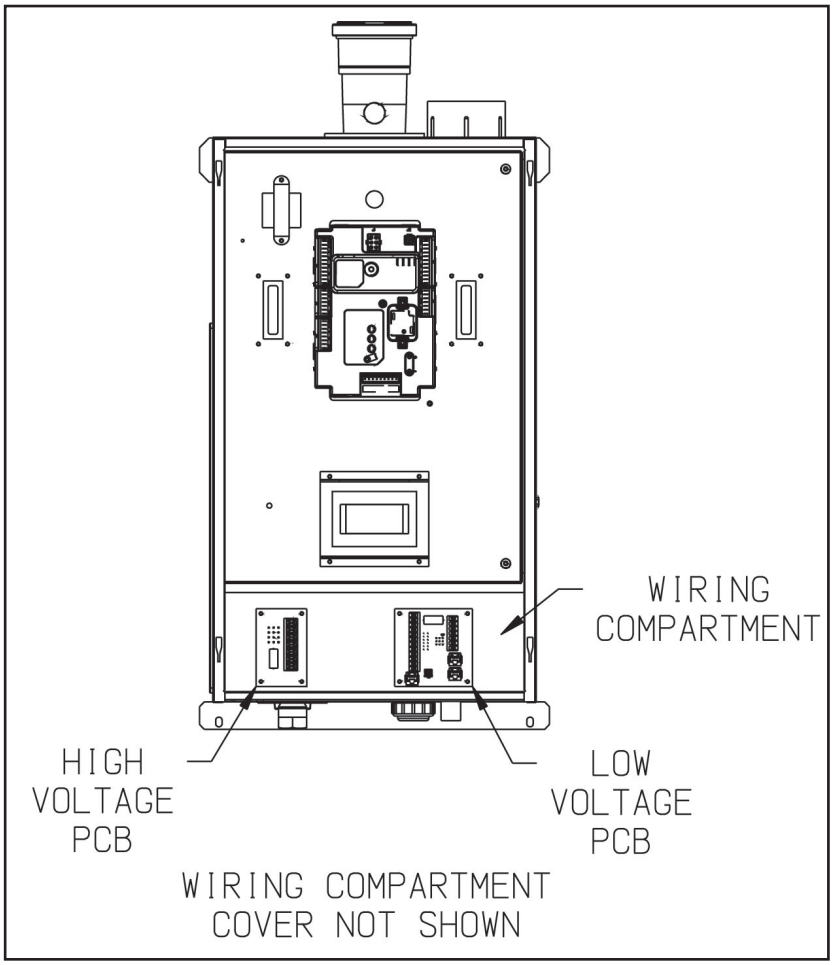

Figure 10.1: Location of High and Low Voltage Printed Circuit Boards (PCB)

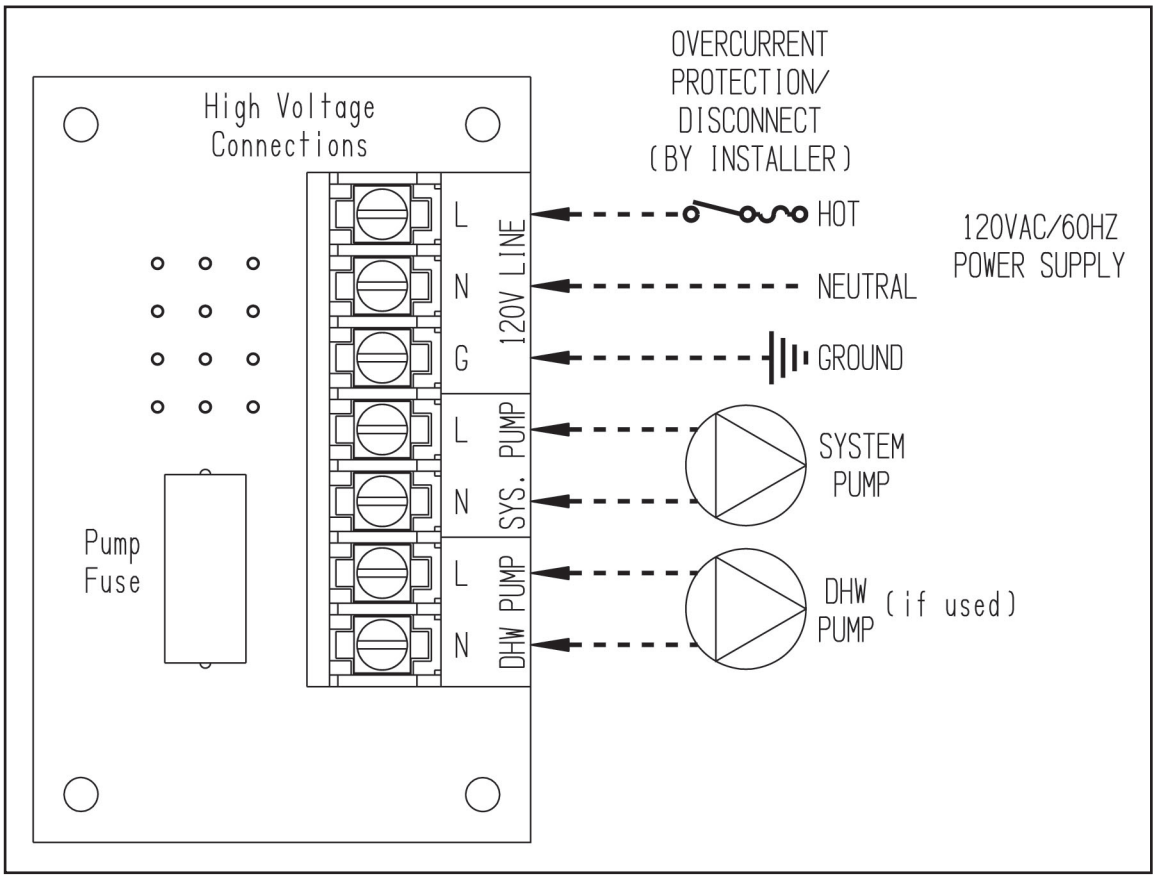

Figure 10.2: High Voltage PCB Terminal Connections

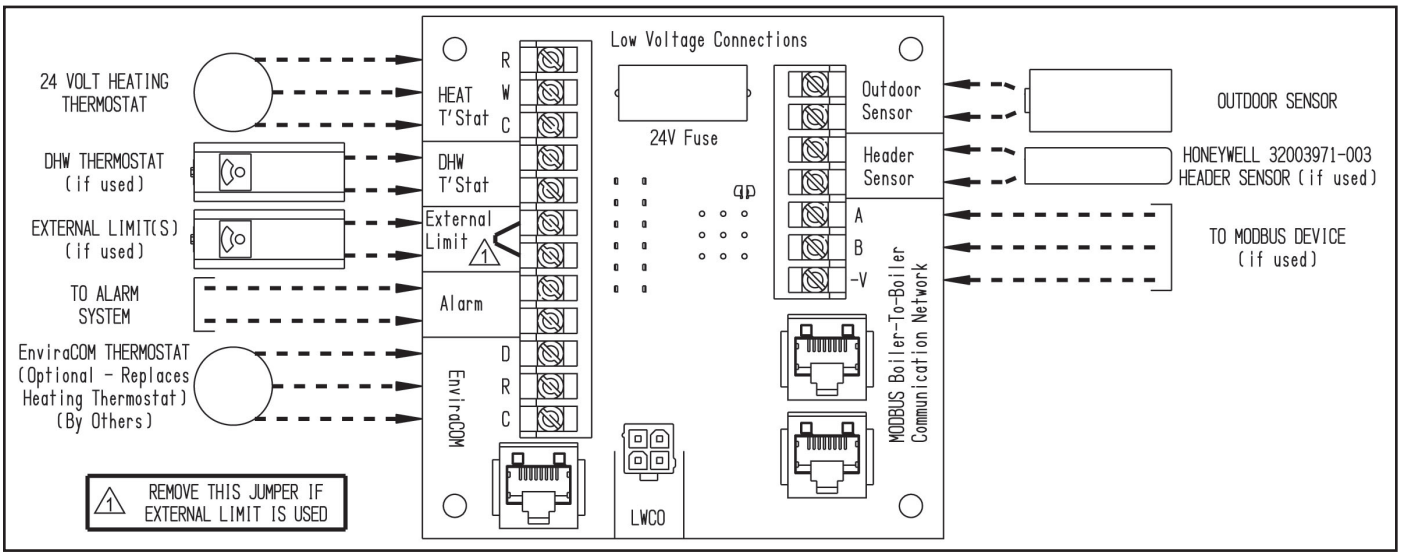

Figure 10.3: Low Voltage PCB Terminal Connections

- Outdoor Sensor - Tasseron TSA00AA Outdoor Temperature Sensor (1)
- Outdoor Sensor - Tasseron TSA00AA Outdoor Temperature Sensor (2)
- Header Sensor - Optional Honeywell 32003971-003 (103104-01) Sensor (1)
- Header Sensor - Optional Honeywell 32003971-003 (103104-01) Sensor (2)
- MODBUS - (A)
- MODBUS - (B)
- MODBUS - (-V)

With the exception of the alarm contacts, external power must not be applied to any of the low voltage terminals - doing so may damage the boiler control. Also note the following:

a) External Limit - The external limit terminals are intended for use with a field supplied safety device, such as a manual reset high limit. When an external limit is used, the jumper between these two terminals must be removed. Failure to remove this jumper will render the external safety devices ineffective.

b) Alarm Contacts - These contacts close when the boiler enters a “hard” lockout (lockout requiring manual reset). They may be used as an input to a building alarm system. Contact rating is 24VAC, 0.63FLA. Do not use for line voltage applications.

c) EnviraCOM - Used to connect EnviraCOM thermostat or other EnviraCOM device approved by the boiler manufacturer for use with this boiler. A Honeywell EnviraCOM connection is also located as labeled on the boiler control itself.

d) Outdoor Sensor - Use only the Tasseron TSA00AA (10 KOhms) outdoor sensor supplied with the boiler. When this sensor is connected and enabled, the boiler will adjust the target supply water temperature downwards as the outdoor air temperature increases. This sensor should be located on the outside of the structure in an area where it will sense the average air temperature around the house. Avoid placing this sensor in areas where it may be covered with ice or snow. In general, locations where the sensor will pick up direct radiation from the sun should also be avoided. Avoid placing the sensor near potential sources of electrical noise such as transformers, power lines, and fluorescent lighting. Wire the sensor to the boiler using 22 gauge or larger wire. As with the sensor itself, the sensor wiring should be routed away from sources of electrical noise. Where it is impossible to avoid such noise sources, wire the sensor using a 2 conductor, UL Type CM, AWM Style 2092 shielded cable. Connect one end of the shielding on this cable to ground. See Section XII of this manual for information on enabling the outdoor reset sensor.

e) Header Sensor - When this sensor is installed and enabled, the boiler will attempt to maintain the target water temperature in the header rather than in the supply. Where the system flow rate varies widely, the use of a header sensor allows the temperature of the water being sent to the radiation to be more accurately controlled. Use only the Honeywell 32003971-003 (103104-01) sensor listed above. Locate this sensor immediately downstream of the second primary-secondary Tee (Figure 10.4). Installation of this sensor in a well, as opposed to on the surface of the header, is highly recommended. The sensor wiring should be routed away from sources of electrical noise. Where it is impossible to avoid such noise sources, wire the sensor using a 2 conductor, UL Type CM, AWM Style 2092, 300Volt 60°C shielded cable. Connect one end of the shielding on this cable to ground. See Section XII for information on enabling the header sensor.

f) MODBUS - Boiler-To-Boiler communication network is used for multiple boiler (“Lead-Lag”) installations. See the multiple boiler installation supplement for additional information.

CAUTION

When making low voltage connections, make sure that no external power source is present in the thermostat or limit circuits. If such a power source is present, it could destroy the boiler’s control. One example of an external power source that could be inadvertently connected to the low voltage connections is a transformer in the old thermostat wiring.

Do not attempt to use EnviraCOM connections for any purpose not explicitly permitted by the boiler manufacturer. Attempting to do so may result in unreliable operation and/or damage to controls.

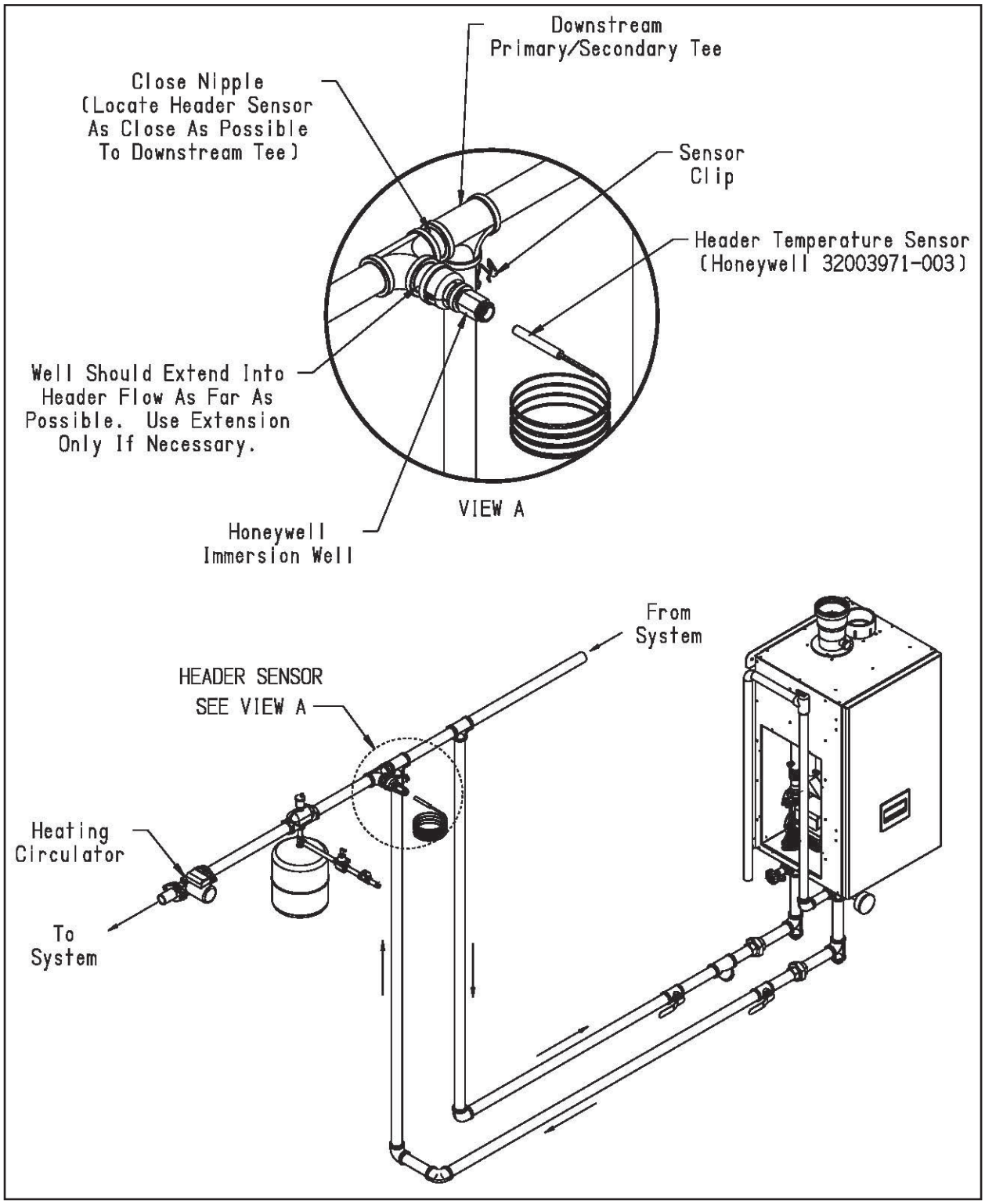

Figure 10.4: Proper Installation of Header Sensor

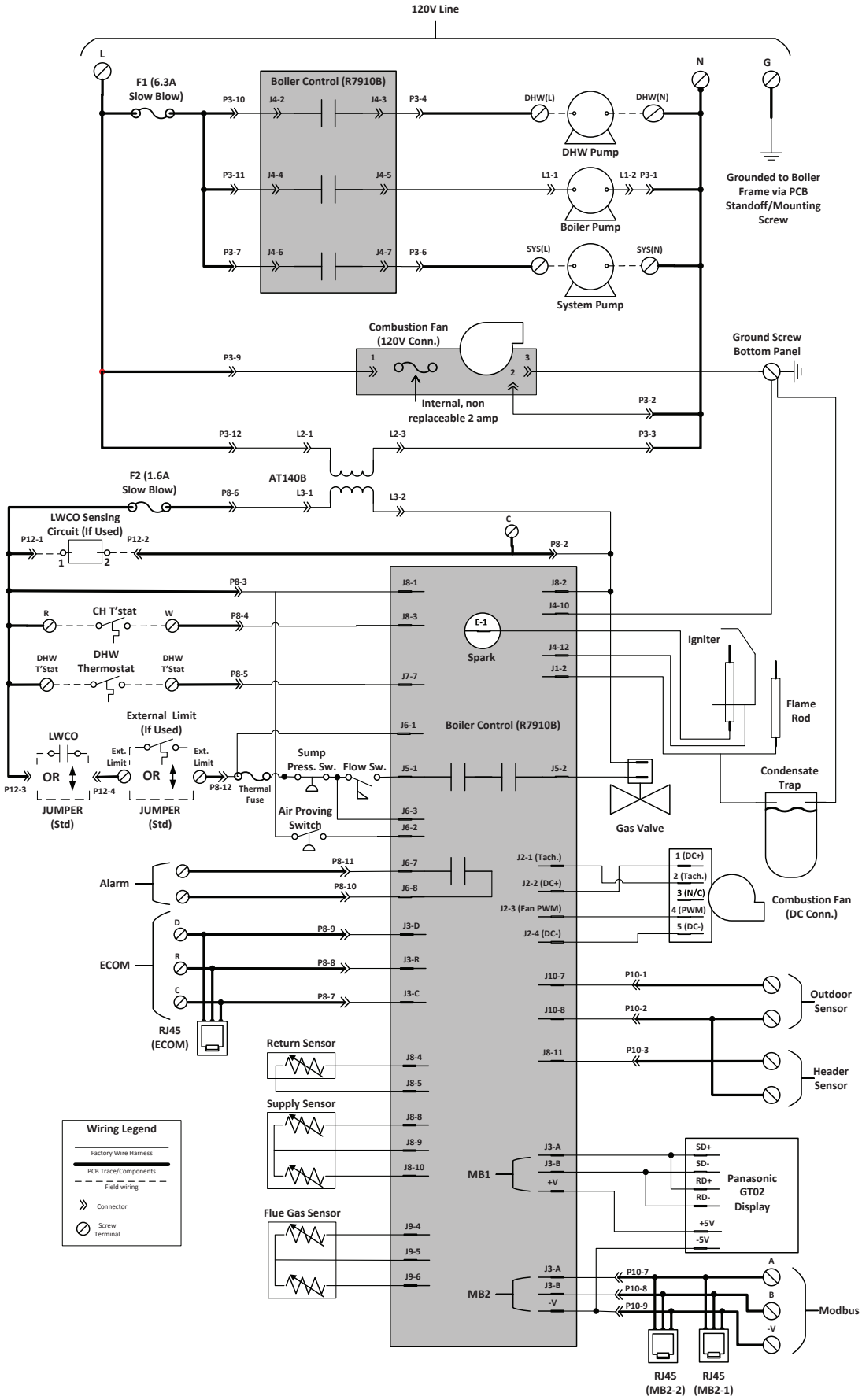

Figure 10.5: Internal Ladder Diagram

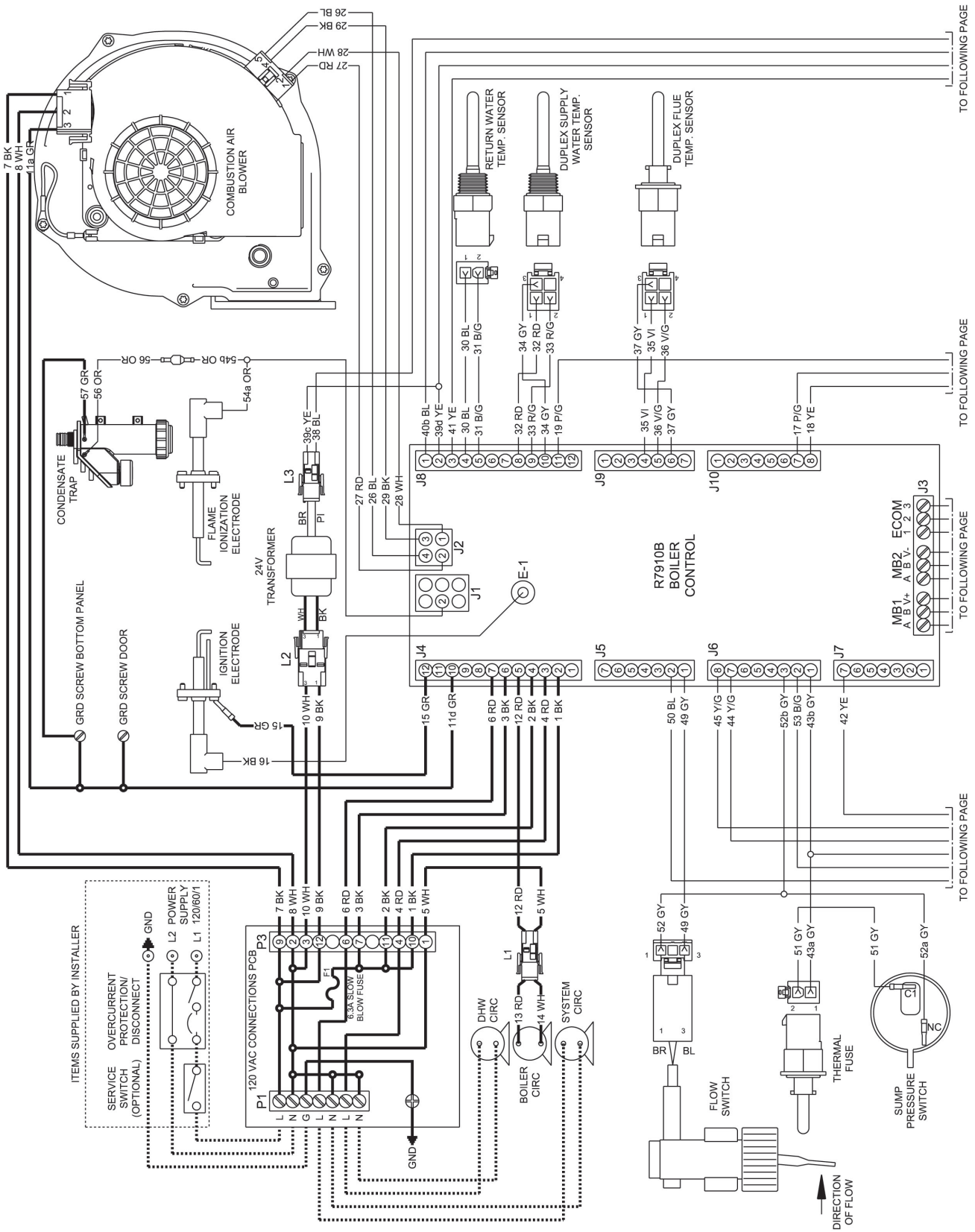
COMBUSTION AIR BLOWER
RETURN WATER TEMP. SENSOR
DUPLEX SUPPLY WATER TEMP. SENSOR
DUPLEX FLUE TEMP. SENSOR
TO FOLLOWING PAGE
CONDENSATE TRAP
FLAME IONIZATION ELECTRODE
24V TRANSFORMER
IGNITION ELECTRODE
GRD SCREW BOTTOM PANEL
GRD SCREW DOOR
R7910B BOILER CONTROL
J1
J2
J3
J4
J5
J6
J7
J8
J9
J10
E-1
L2
L3
MB1
MB2
ECOM
ITEMS SUPPLIED BY INSTALLER
SERVICE SWITCH (OPTIONAL)
OVERCURRENT PROTECTION/ DISCONNECT
POWER SUPPLY 120/60/1
120 VAC CONNECTIONS PCB
P1
P3
6.3A SLOW BLOW FUSE
DHW CIRC
BOILER CIRC
SYSTEM CIRC
FLOW SWITCH
THERMAL FUSE
SUMP PRESSURE SWITCH
DIRECTION OF FLOW
GND

X. Wiring (continued)

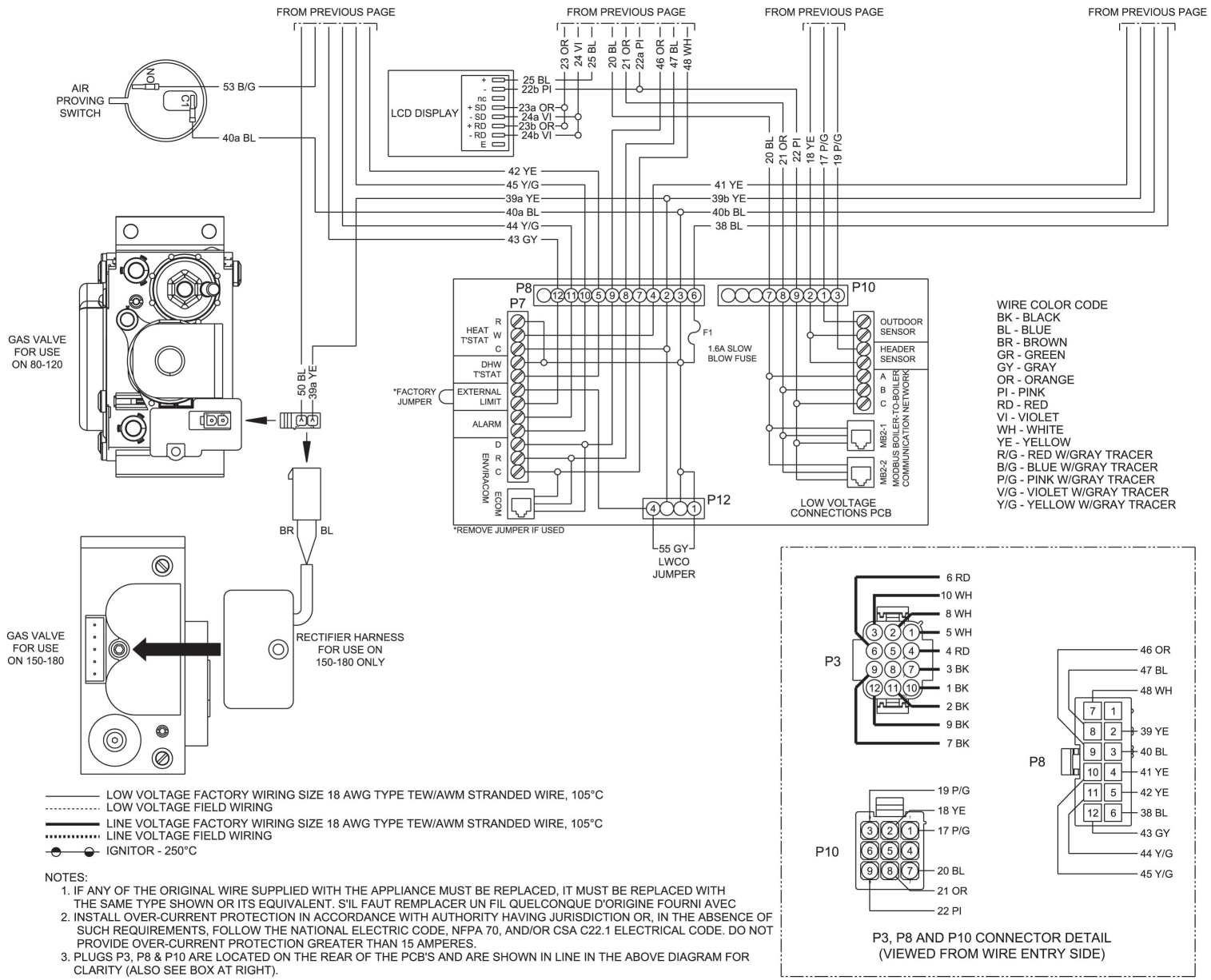

NOTES:

1. IF ANY OF THE ORIGINAL WIRE SUPPLIED WITH THE APPLIANCE MUST BE REPLACED, IT MUST BE REPLACED WITH THE SAME TYPE SHOWN OR ITS EQUIVALENT. S'IL FAUT REMPLACER UN FIL QUELCONQUE D'ORIGINE FOURNI AVEC
2. INSTALL OVER-CURRENT PROTECTION IN ACCORDANCE WITH AUTHORITY HAVING JURISDICTION OR, IN THE ABSENCE OF SUCH REQUIREMENTS, FOLLOW THE NATIONAL ELECTRIC CODE, NFPA 70, AND/OR CSA C22.1 ELECTRICAL CODE. DO NOT PROVIDE OVER-CURRENT PROTECTION GREATER THAN 15 AMPERES.
3. PLUGS P3, P8 & P10 ARE LOCATED ON THE REAR OF THE PCB'S AND ARE SHOWN IN LINE IN THE ABOVE DIAGRAM FOR CLARITY (ALSO SEE BOX AT RIGHT).

Figure 10.6: Internal Wiring Connections Diagram

Table 10.7: Internal Wire Connection Markings Cross Reference Table

WIRE NO. IN FIG. 10.5	WIRE MARKING	WIRE NO. IN FIG 10.5	WIRE MARKING
1 BK	P3-10/J4-2	29 BK	J2-3/FAN-4
2 BK	P3-11/J4-4	30 BL	J8-4/RET-1
3 BK	P3-7/J4-6	31 B/G	J8-5/RET-2
4 RD	P3-4/J4-3	32 RD	J8-8/SUP-1
5 WH	P3-1/L1A-2	33 R/G	J8-9/SUP-2
6 RD	P3-6/J4-7	34 GY	J8-10/SUP-3
7 BK	P3-9/B1-1	35 VI	J9-4/FLUE-1
8 WH	P3-2/B1-2	36 V/G	J9-5/FLUE-2
9 BK	P3-12/L2-1	37 GY	J9-6/FLUE-3
10 WH	P3-3/L2-3	38 BL	P8-6/L3-1
11 GR	GND/SPL GR-2	39 YE	J8-2/SPL YE-1
11a GR	SPL GR-2/B1-3	39a YE	SPL YE-1/GAS-2
11b GR (NOT SHOWN)	SPL GR-2/SPL GR-1	39b YE (NOT SHOWN)	SPL YE-1/SPL YE-2
11c GR	SPL GR-1/GND	39c YE	SPL YE-2/L3-2
11d GR	SPL GR-1/J4-10	39d YE	SPL YE-2/J8-2
12 RD	L1A-1/J4-5	40 BL	P8-3/SPL BL-1
13 RD	L1B-1/STRIP	40a BL	SPL BL-1/APS
14 WH	L1B-2/STRIP	40b BL	SPL BL-1/J8-1
15 GR	J4-12/GND	41 YE	P8-4/J8-3
16 OR	IGNITOR	42 YE	P8-5/J7-7
17 P/G	P10-1/J10-7	43 GY	P8-12/SPL GY-1
18 YE	P10-2/J10-8	43a GY	SPY GY-1/THERM-1
19 P/G	P10-3/J8-11	43b GY	SPL GY-1/J6-1
20 BL	P10-7/J3-4	44 Y/G	P8-11/J6-7
21 OR	P10-8/J3-5	45 Y/G	P8-10/J6-8
22 PI	P10-9/SPL P1-1	46 OR	P8-9/J3-7
22a PI	SPL P1-1/J3-6	47 BL	P8-8/J3-8
22b PI	SPL P1-1/GT02-2	48 WH	P8-7/J3-9
23 OR	J3-1/SPL OR-1	49 GY	J5-1/FLOW-3
23a OR	SPL OR-1/GT02-4	50 BL	J5-2/GAS-1
23b OR	SPL OR-1/GT02-6	51 GY	THERM-2/SPS
24 VI	J3-2/SPL VI-1	52 GY	FLOW-1/SPL GY-2
24a VI	SPL VI-1/GT02-5	52a GY	SPL GY-2/SPS
24b VI	SPL VI-1/GT02-7	52b GY	SPL GY-2/J6-3
25 BL	J3-3/GT02-1	53 B/G	APS/J6-2
26 BL	J2-4/FAN-5	54 OR	J1-2/SPL OR-2
27 RD	J2-2/FAN-1	54a OR	SPL OR-2/FLAME
28 WH	J2-1/FAN-2	54b OR	SPL OR-2/TRAP

USE WIRE CODE ON CONNECTIONS DIAGRAM TO DETERMINE COLOR.

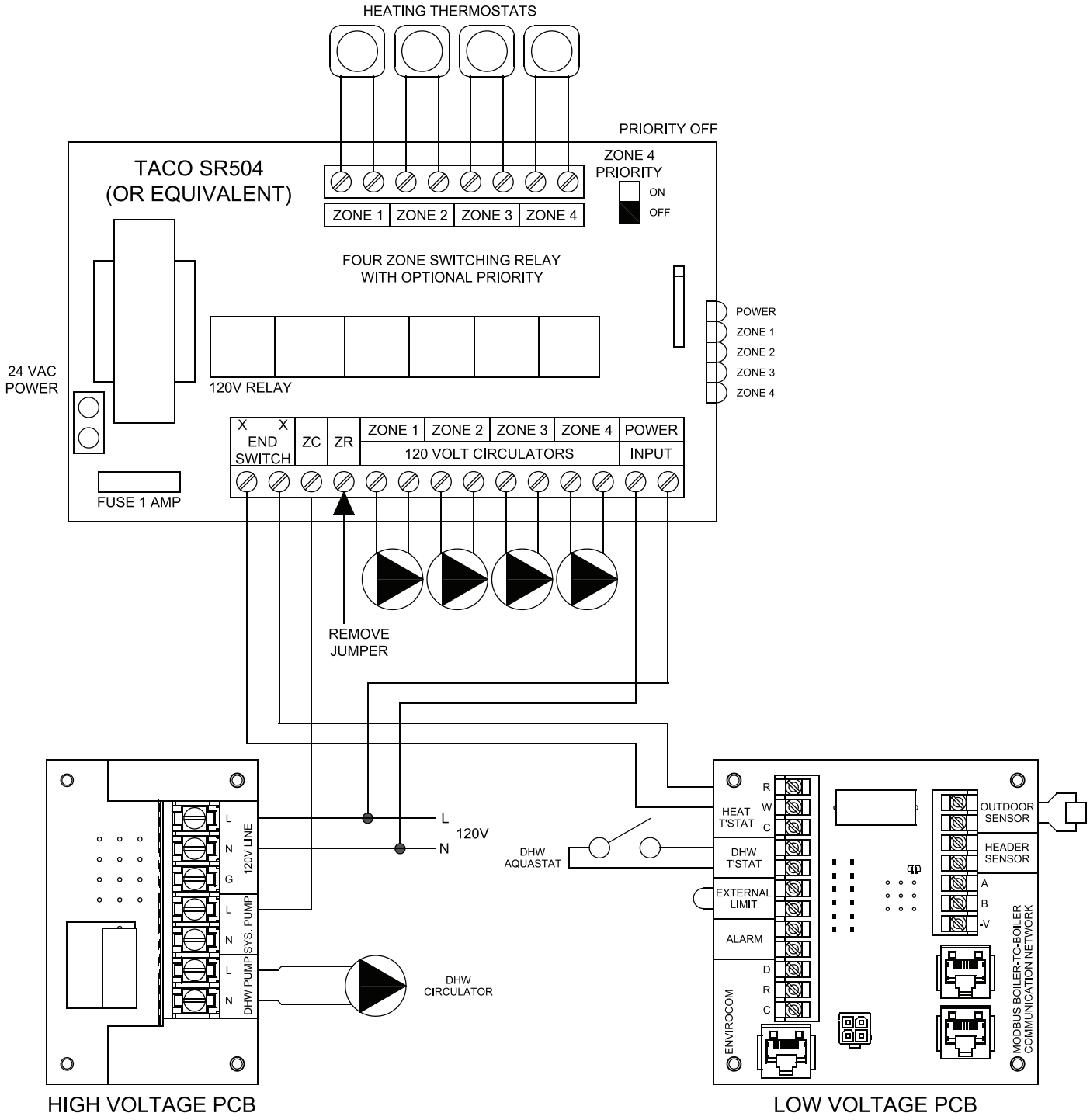

***USE SAME POWER SOURCE FOR ALL CONTROLS AND ENSURE POLARITY TO ALL CONTROL DEVICES IS CORRECT

Figure 10.8: TACO SR504 or Equivalent Zone Panel Wiring Connection Diagram

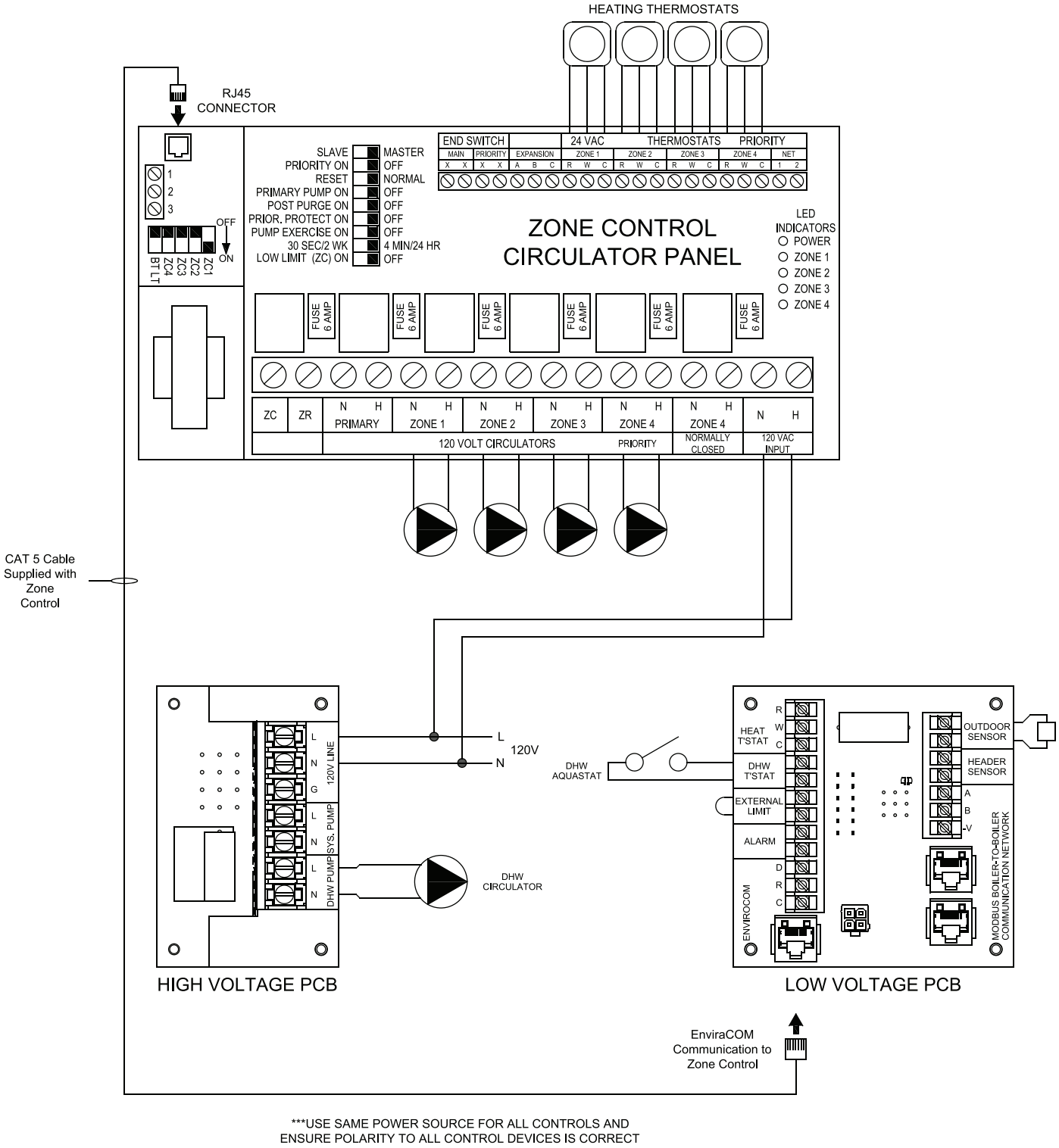

Figure 10.9: Sage Zone Control Circulator Panel Wiring Connection Diagram

XI. Start-Up and Checkout

WARNING

Completely read, understand and follow all instructions in this manual before attempting start-up.

NOTICE

Safe lighting and other performance criteria were met with the gas train assembly provided on the boiler when the boiler underwent the test specified in Z21.13.

Use the following procedure for initial start-up of the boiler:

1) Verify that the venting, water piping, gas piping and electrical system are installed properly.

2) Confirm all electrical, water and gas supplies are turned off at the source and that vent is clear of obstructions.

3) Confirm that all manual shut-off gas valves between the boiler and gas source are closed.

4) If not already done, flush the system to remove sediment, flux, and traces of boiler additives.

5) Fill the boiler and hydronic system with water meeting the following requirements below (also see the note on the next page):
   - pH between 6.5 and 9.5
   - Hardness less than 7 grains/gallon
   - Chlorides less than 200 ppm
   - Pressurize the system to at least 12 psi at the boiler

WARNING

Burn Hazard. The maximum operating pressure of this boiler is 30 psig (210 kPa) or 50 psig (340 kPa), depending on the model and safety relief valve option selected. Never exceed the maximum allowable working pressure on the heat exchanger ASME plate.

6) Bleed air from the heat exchanger using the manual air vent in the top left side of the heat exchanger (Figure 11.1). To do this install a piece of ¼" ID clear tubing over the hose barb and route the tubing to a location where water will not damage controls or nearby construction. Turn vent counter clockwise and allow heat exchanger to vent until a steady stream of water is observed. Close vent and remove hose.

7) Check all gas piping for leaks and purge piping sections that are filled with air. Refer to the *National Fuel Gas Code* for additional information on testing and purging gas lines.

DANGER

Explosion Hazard. Do not use matches, candles, open flames or other ignition source to check for leaks.

Make sure that the area around the boiler is clear and free from combustible materials, gasoline and other flammable vapors and liquids.

8) Confirm vent system is complete and free of obstructions before attempting to fire boiler.

9) Inspect all wiring for loose, uninsulated or miswired connections.

10) If the boiler is to be converted to propane, convert as described in Appendix A. If boiler is operating at elevations above 2000ft, see Appendix B of this manual for setup instructions.

DANGER

Asphyxiation Hazard. Failure to properly convert this boiler for use on lp gas can cause unreliable operation at elevated carbon monoxide (CO) levels, resulting in personal injury or death.

NOTICE

To minimize the risk of premature heat exchanger failure, observe the following water chemistry requirements:

1) Minimize the introduction of make-up water, dissolved oxygen, and contaminants into the boiler by following the installation guidelines shown in the "Water Quality and Boiler Water Additives Note" on Page 67.

2) Make sure the system is filled with water meeting the following criteria:
   - pH between 6.5 and 9.5 (for systems containing aluminum components, between 6.5 and 8.5)
   - Chloride level less than 200 PPM. If fill water is drawn from a system containing a water softener, test a sample of the fill water to confirm that this criteria is met.
   - Hardness less than 7 grains/gallon.

3) Avoid the use of petroleum based boiler additives. These can attack seals in both the boiler and system.

4) If freeze protection is required, use the following or its equivalent:
   - Fernox Alphi -11 (inhibited Propylene Glycol) available from Alent plc Consumer Products Division, 4100 6th Avenue, Altoona PA. (972) 547 6002 (fernox_usa@alent.com). U.S. Boiler Part # 101146-01 is for a 5 gallon bucket.

Refer to the antifreeze manufacturer's instructions for required dosage. In general these products are a blend of glycol (for freeze protection) and inhibitors (to protect the glycol from attacking metallic system components). Do not add any more antifreeze than is necessary to protect the system from freeze damage. Many of these products require annual testing of the system water to ensure that the inhibitors are still active; consult the manufacturer's instructions for maintenance requirements. Allowance must be made for the additional expansion of the glycol solution.

5) For system cleaning, use the following or its equivalent:
   - Fernox Cleaner F3 available from Alent plc Consumer Products Division, 4100 6th Avenue, Altoona PA. (972) 547 6002 (fernox_usa@alent.com).

Refer to the instructions supplied with the cleaner for proper dosage and use.

WARNING

Poison Hazard. Use only inhibited propylene glycol solutions specifically formulated for hydronic systems. Do not use ethylene glycol, which is toxic and can attack gaskets and seals used in hydronic systems. Use of ethylene glycol could result in property damage, personal injury or death.

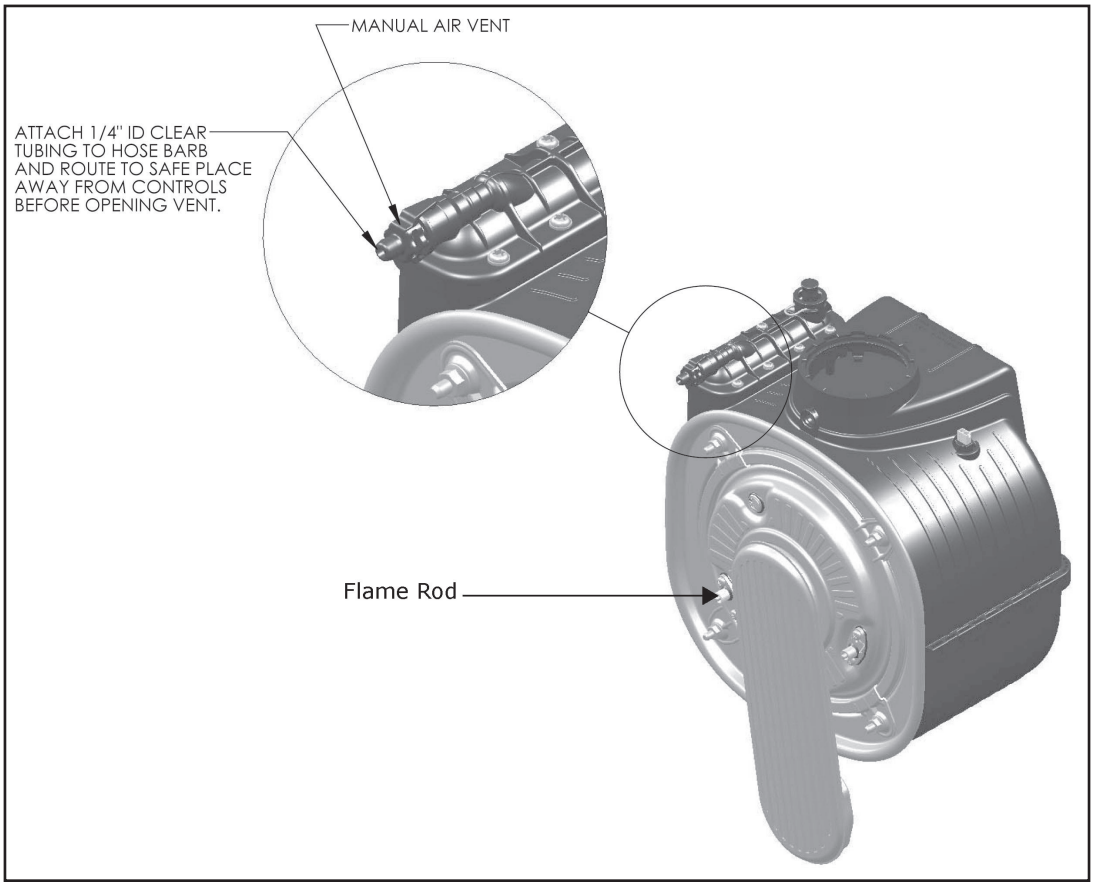

Figure 11.1: Location of Manual Air Vent

11) Start the boiler using the lighting instructions on page 97. With the boiler powered up, and with no call for heat, the display should look like Figure 11.2a. Once a call for heat is present, it will look like Figure 11.2b.

12) The boiler should attempt to fire approximately 30 seconds after a call for heat appears. With the upper front cover removed from the boiler, this try for ignition will appear as an audible spark (lasting approximately 4 seconds) and an audible click from the gas valve. Upon initial start-up, the gas train will be filled with air. Even if the gas line has been completely purged of air, it may take several tries for ignition before a flame is established. If the boiler does not light after four tries for ignition, it will enter a "soft lockout" and will wait for one hour before attempting another ignition sequence. This soft lockout can be reset by interrupting power to the boiler for a few seconds. Once a flame has been established for the first time, subsequent calls for burner operation should result in a flame on the first try.

13) If there is a problem that appears before the first try for ignition, or if the boiler fails to light after four tries for ignition, the blinking red screen with "HELP" highlighted on the Home screen (Figure 11.2c). Touching this "HELP" button will take the user to the Diagnostics menu where the cause of the problem can usually be found by pressing the flashing button on each successive screen. For more information, see Operation Manual.

14) Inspect the flame visible through the window. On high fire the flame should be stable and mostly blue (Figure 11.3). No yellow tipping should be present; however, intermittent flecks of yellow and orange in the flame are normal.

15) Check the inlet gas pressure. Verify that the inlet gas pressure is between the upper and lower limits shown on the rating plate with all gas appliances on and off.

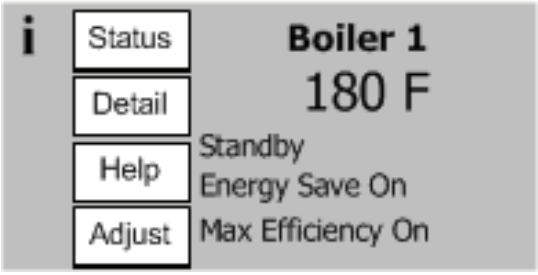

Figure 11.2a: Home Screen at Power-Up (No Call for Heat)

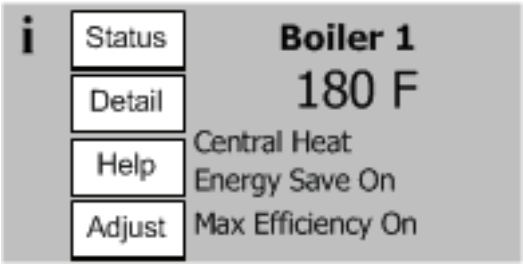

Figure 11.2b: Home Screen on Heat Demand

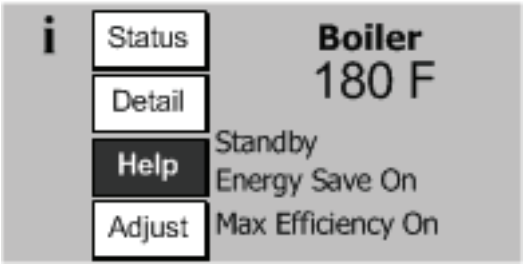

Figure 11.2c: Home Screen with Active Fault

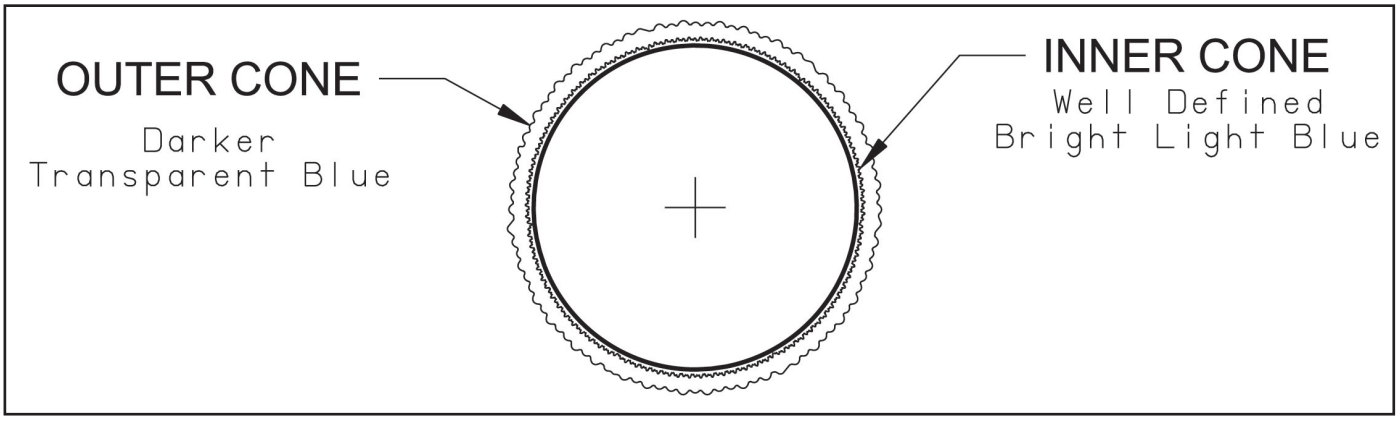

Figure 11.3: Burner Flame

WARNING

Asphyxiation Hazard. Each boiler is tested at the factory and adjustments to the air fuel mixture are normally not necessary when operating on natural gas at sea level. Consult the factory before attempting to make any such adjustments. Improper gas valve or mixture adjustments could result in property damage, personal injury or loss of life due to carbon monoxide (CO) poisoning.

WARNING

Asphyxiation Hazard. The outlet pressure for the gas valve has been factory set and requires no field adjustment. This setting is satisfactory for both natural gas and propane. Attempting to adjust the outlet pressure may result in damage to the gas valve and cause property damage, personal injury or loss of life. due to carbon monoxide (CO) poisoning.

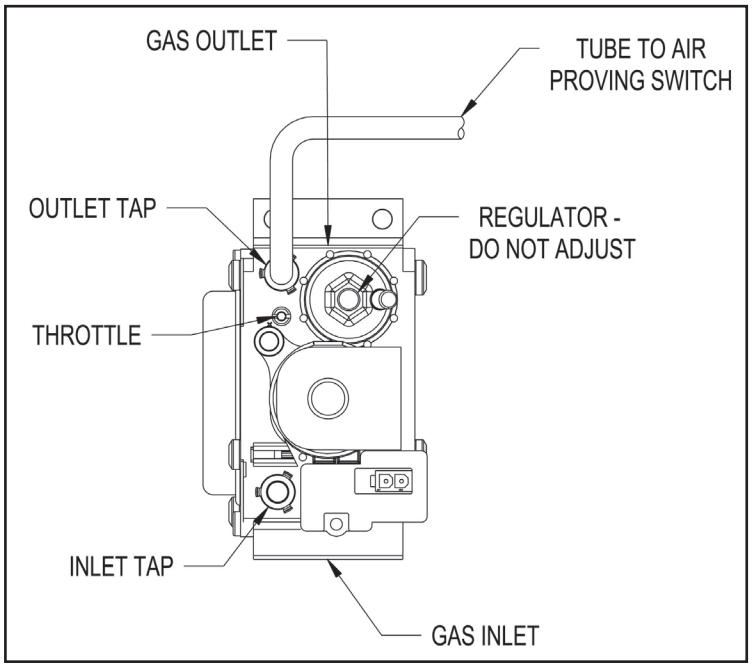

Figure 11.4a: Gas Valve Detail (80MBH THRU 120MBH)

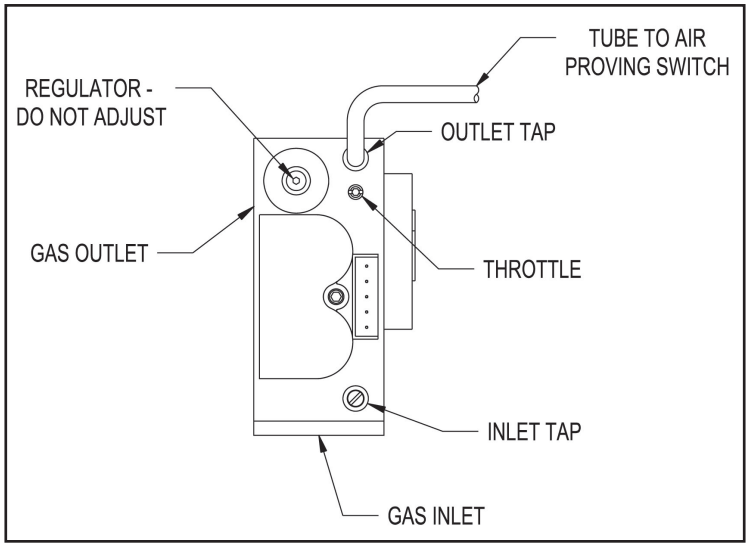

Figure 11.4b: Gas Valve Detail (150MBH, 180MBH)

16) Perform a combustion test. Boilers are equipped with a screw cap in the vent adapter. Be sure to replace this cap when combustion testing is complete. Check CO_2 (or O_2) and CO at both high and low fire. The boiler may be temporarily locked into high or low fire as follows:

a) Fire the boiler through any call for heat.
b) From the Home Screen, press "ADJUST" to enter the adjust menu.
c) Press "ADJUST".
d) Press "LOGIN".
e) Press "000".
f) Enter the password "086".
g) Press return ar ↵ to close the keypad.
h) Press "SAVE".
i) Press "ADJUST".
j) Press "MANUAL CONTROL".
k) Press "HIGH" or "LOW" as appropriate.

To return the boiler to automatic modulation, press AUTO FIRE. Note: If the Auto Fire button is not pressed, boiler will remain in manual fire for around 10 minutes. After 10 minutes boiler automatically returns to automatic modulation.

At both high and low fire, CO readings should be less than 200 PPM air free. Typical CO_2 and O_2 readings are shown in Table 11.5. Final readings should be taken with all doors and covers in place.

17) Perform a check of the ignition safety shut-off device. With the burner firing, carefully unplug the orange flame rod wire at the flame rod using a pair of insulated pliers (Figure 11.1). The burner should shut off immediately.

18) Test any external limits or other controls in accordance with the manufacturer's instructions.

19) Refer to the Operation Manual to set-up the control for the system in which the boiler is installed. Some common set-up tasks include:

- Setting the CH and DHW temperature set-points (as shipped, both setpoints are set to 180°F).
- Selecting the type of indirect water heater (if any) and location of DHW pumps.
- Defining the system pump operation.

20) Adjust the heating and indirect water heater thermostats to their final set points.

Table 11.5: Typical Combustion Readings (Sea Level Only)

Model	Fuel	$\%CO_2$	$\%O_2$	Max. CO Air Free
K2-080	Natural Gas	8.9 - 9.3	4.6 - 5.3	COAF readings should be less than 200 ppm.
K2-080	Propane	10.1 - 10.3	5.3 - 5.6	
K2-100	Natural Gas	8.9 - 9.3	4.6 - 5.3	
K2-100	Propane	10.1 - 10.3	5.3 - 5.6	
K2-120	Natural Gas	8.9 - 9.3	4.6 - 5.3	
K2-120	Propane	10.1 - 10.3	5.3 - 5.6	
K2-150	Natural Gas	8.9 - 9.3	4.6 - 5.3	
K2-150	Propane	10.1 - 10.3	5.3 - 5.6	
K2-180	Natural Gas	8.8 - 9.1	4.9 - 5.4	
K2-180	Propane	10.1 - 10.3	5.3 - 5.6	

NOTICE

This boiler has a limited warranty, a copy of which is included with this boiler. It is the responsibility of the installing contractor to see that all controls are correctly installed and are operating properly when the installation is complete.

Lighting and Operating Instructions

FOR YOUR SAFETY READ BEFORE OPERATING/POUR VOTRE SECURITE LISEZ AVANT DE METTRE EN MARCHE

WARNING: If you do not follow these instructions exactly, a fire or explosion may result causing property damage, personal injury or loss of life.

AVERTISSEMENT: Quiconque ne respecte pas à la lettre les instructions dans la présente notice risque de déclencher un incendie ou une explosion entraînant des dommages, des blessures ou la mort.

A. This appliance does not have a pilot. It is equipped with an ignition device which automatically lights the burner. Do not try to light the burner by hand.

B. BEFORE OPERATING smell all around the appliance area for gas. Be sure to smell next to the floor because some gas is heavier than air and will settle on the floor.

WHAT TO DO IF YOU SMELL GAS:

- Do not try to light any appliance.
- Do not touch any electric switch; do not use any phone in your building.
- Immediately call your gas supplier from a neighbor's phone. Follow the gas supplier's instructions.
- If you cannot reach your gas supplier, call the fire department.

C. Use only your hand to turn the gas control knob. Never use tools. If the knob will not turn by hand, don't try to repair it, call a qualified service technician. Force or attempted repair may result in a fire or explosion.

D. Do not use this appliance if any part has been under water. Immediately call a qualified service technician to inspect the appliance and to replace any part of the control system and any gas control which has been under water.

A. Cet appareil ne comporte pas de veilleuse. Il est muni d'un dispositif d'allumage qui allume automatiquement le brûleur. Ne tentez pas d'allumer le brûleur manuellement.

B. AVANT DE FAIRE FONCTIONNER, reniflez tout autour de l'appareil pour déceler une odeur de gaz. Reniflez près du plancher, car certains gaz sont plus lourds que l'air et peuvent s'accumuler au niveau du sol.

QUE FAIRE SI VOUS SENTEZ UNE ODEUR DE GAZ:

- **Ne pas tenter d'allumer d'appareil.**
- **Ne touchez à aucun interrupteur ; ne pas vous servir des téléphones se trouvant dans le bâtiment.**
- **Appelez immédiatement votre fournisseur de gaz depuis un voisin. Suivez les instructions du fournisseur.**
- **SI vous ne pouvez rejoindre le fournisseur, appelez le service des incendies.**

C. Ne poussez ou tournez la manette d'admission du gaz qu'à la main ; ne jamais utiliser d'outil. Si la manette reste coincée, ne pas tenter de la réparer ; appelez un technicien qualifié. Le fait de forcer la manette ou de la réparer peut déclencher une explosion ou un incendie.

D. N'utilisez pas cet appareil s'il a été plongé dans l'eau, même partiellement. Faites inspecter l'appareil par un technicien qualifié et remplacez toute partie du système de contrôle et toute commande qui ont été plongés dans l'eau.

OPERATING INSTRUCTIONS/ INSTRUCTIONS DE FONCTIONNEMENT

1. STOP! Read safety information above on this label.
2. Set the thermostat to lowest setting.
3. Turn off all electric power to the appliance.
4. This appliance is equipped with an ignition device which automatically lights the burner. Do not try to light the burner by hand.
5. Turn the external boiler manual gas valve handle clockwise to close the gas supply.
6. Wait five (5) minutes to clear out any gas. Then smell for gas, including near the floor. If you smell gas, STOP! Follow "B" in the safety information above on this label. If you don't smell gas, go to the next step.
7. Turn the external boiler manual gas valve handle counterclockwise to open the gas supply.
8. Turn on all electric power to the appliance.
9. Set the thermostat to the desired setting.
10. If the appliance will not operate, follow the instructions "To Turn Off Gas To Appliance" and call your service technician or gas supplier.

1. ARRÊTEZ ! Lisez les instructions de sécurité sur la portion supérieure cette étiquette.
2. Réglez le thermostat à la température la plus basse.
3. Coupez l'alimentation électrique de l'appareil.
4. Cet appareil est équipé de l' dispositif d'allumage qui automobile allume maticallyle brûleur. Ne tentez pas d'allumer le brûleur manuellement.
5. Tourner la chaudière externe manuelle poignée en clapet à gaz dans le sens des aiguilles d'une montre pour fermer l'offre de gaz.
6. Attendre cinq (5) minutes pour laisser échapper tout le gaz. Reniflez tout autour de l'appareil, y compris près du plancher, pour déceler une odeur de gaz. Si vous seutez une odeur de gaz, ARRÊTEZ ! Passez à l'étape B des instructions de sécurité sur la portion supérieure de cette étiquette. S'il n'y a pas d'odeur de gaz, passez à l'étape suivante.
7. Tourner la chaudière externe manuelle compteur de poignée en clapet à gaz ouvrir dans le sens des aiguilles d'une montre le gaz approvisionnement.
8. Mettez l'appareil sous tension.
9. Réglez le thermostat à la température désirée.
10. Si l'appareil ne se met pas en marche, suivez les instructions intitulées « Comment couper l'admission de gaz de l'appareil » et appelez un technicien qualifié ou le fournisseur de gaz.

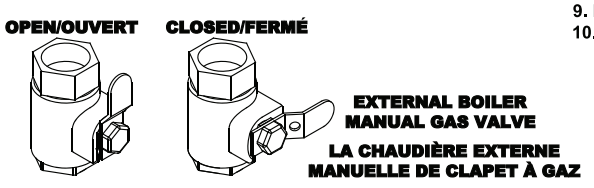

TO TURN OFF GAS TO APPLIANCE/ COMMENT COUPER L'ADMISSION DE GAZ DE L'APPAREIL

1. Set the thermostat to lowest setting.
2. Turn off all electirc power to the appliance if service is to be performed.
3. Turn the external boiler manual gas valve handle clockwise to close gas supply.

1. Réglez le thermostat à la température la plus basse.
2. Coupez l'alimentation électrique de l'appareil s'il faut procéder à l'entretien.
3. Tourner la chaudière externe manuelle poignée en clapet à gaz dans le sens des aiguilles d'une montre pour fermer l'offre de gaz.

Appendix A: Instructions for Conversion of this Boiler for use with LP Gas

DANGER

These instructions include a procedure for adjusting the air-fuel mixture on this boiler. This procedure requires a combustion analyzer to measure the CO2 (or Oxygen) and Carbon Monoxide (CO) levels in flue gas. Adjusting the air-fuel mixture without a proper combustion analyzer could result in unreliable boiler operation, personal injury, or death due to carbon monoxide poisoning.

WARNING

This conversion kit shall be installed by a qualified service agency in accordance with the manufacturer's instructions and all applicable codes and requirements of the authority having jurisdiction. If the information in these instructions is not followed exactly, a fire, an explosion or production of carbon monoxide may result causing property damage, personal injury, or loss of life. The qualified service agency is responsible for proper installation of this kit. The installation is not proper and complete until the operation of the converted appliance is checked as specified in the manufacturer's instructions supplied with the kit.

To convert this boiler for use on LP gas, perform the following steps:

1) If not already done, install the boiler in accordance with this manual, following all instructions in Section XI (Start-up and Check-out) up to Step 10.

2) Before attempting to start the boiler turn the throttle (Figure A.1) clockwise until it stops (several full turns).

3) Turn throttle counter-clockwise the exact number of turns shown in Table A.2.

WARNING

The pressure regulator has been factory set using precision instruments and must never be adjusted in the field. The gas valve outlet pressure is the same for both natural gas and propane. Make sure that all adjustments are made with the throttle, not the pressure regulator. Attempting to adjust the pressure regulator will result in damage to the gas valve and may cause property damage, personal injury or loss of life.

WARNING

The throttle adjustments shown in Table A.2 are approximate. The final throttle setting must be found using a combustion analyzer. Leaving the boiler in operation with a CO level in excess of the value shown in Table 3 could result in injury or death from carbon monoxide poisoning.

4) Attempt to start the boiler using the lighting instructions located on Page 97. If the boiler does not light on the first try for ignition, allow to boiler to make at least four more attempts to light. If boiler still does not light, turn the throttle counter-clockwise in 1/8 turn increments, allowing the boiler to make at least four tries for ignition at each setting, until the boiler lights.

5) After the burner lights, force the burner to high fire by entering the Adjust Menu and then High Fire Hold as described in Section XI (Start-up and Checkout). Allow the boiler to operate for approximately 5 minutes before taking combustion readings. Note: after 10 minutes, the boiler is automatically released from high fire hold.

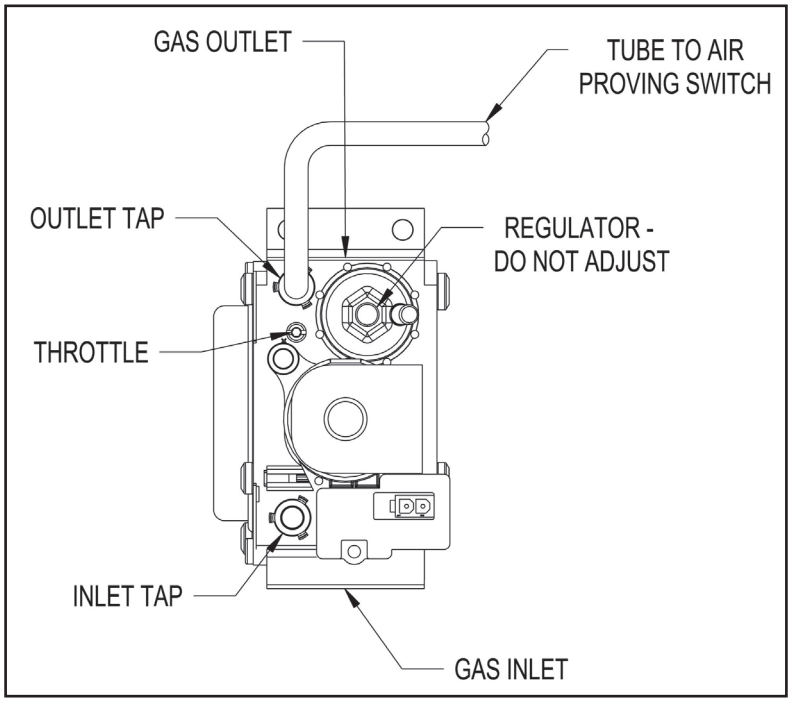

FIGURE A.1a: GAS VALVE DETAIL (80MBH THRU 120MBH)

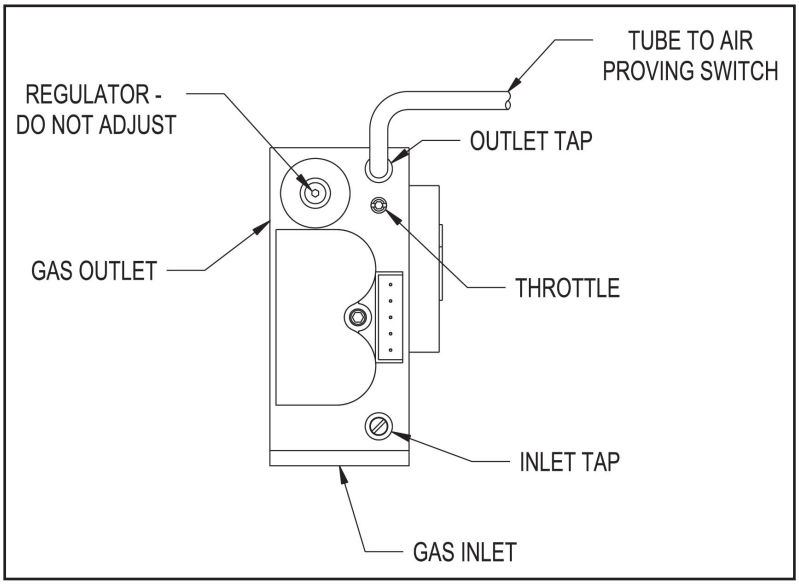

FIGURE A.1b: GAS VALVE DETAIL (150MBH, 180MBH)

Table A.2: Starting Number of Throttle Turns for Conversion to LP Gas

Model	# Counter-clockwise Turns (From Fully Closed)
K2-080	3-3/4
K2-100	3
K2-120	4
K2-150	2-3/4
K2-180	6-1/2

6) Perform a combustion test, sampling flue products from the tap in the front of the vent adaptor.

7) While the burner is at high fire adjust the throttle as needed to obtain the CO_2 (or O_2) settings shown in the Table A.3:

- To reduce the CO_2 (increase the O_2) turn the throttle clockwise
- To increase the CO_2 (reduce the O_2) turn the throttle counter-clockwise

Make adjustments in increments of 1/8 to 1/4 turn and allow the boiler at least a minute to respond to each adjustment before making another. In general, the CO level will be at its lowest somewhere in the CO_2 range shown in this table.

Table A.3: Acceptable Combustion Readings for LP Operation (sea level only)

Model	CO_2 Range	O_2 Range	Max. CO Air Free
080	10. - 10.3	5.6 - 5.3	200
100	10. - 10.3	5.6 - 5.3	200
120	10. - 10.3	5.6 - 5.3	200
150	10. - 10.3	5.6 - 5.3	200
180	10. - 10.3	5.6 - 5.3	200

8) Verify that the gas inlet pressure is between 11.0 and 14.0 inches w.c. with all gas appliances (including the converted boiler) both on and off.

9) A sheet of yellow labels is provided in the envelope with this manual for boilers converted from natural to LP gas. Select the model from this sheet of labels and apply them as follows:

- Apply the “Rating Plate Label” adjacent to the rating plate.
- Apply the “Gas Valve Label” to a conspicuous area on the gas valve.
- Apply the “Boiler Conversion Label” to a conspicuous surface on, or adjacent to, the outer boiler jacket. Fill in the date of the conversion and the name and address of the company making the conversion with a permanent marker.

10) Refer to the “Start-up and Checkout” section of the boiler installation manual and perform any checks not already completed.

Appendix B: Instructions for High Altitude Installations Above 2000 ft.

WARNING

If installing K2-080 or K2-180, do not attempt to convert K2-080 for use with LP at altitudes above 2000 ft. Also, do not attempt to convert K2-180 for use with LP gas at altitudes above 7800 ft. Attempts to do so may result in unreliable operation, property damage, personal injury or loss of life due to carbon monoxide (CO) poisoning.

These instructions apply only to the following K2 boiler configurations: **2001 ft.- 4500 ft, 4501 ft.- 7800 ft., 7801 ft.- 10,100 ft.**

These instructions contain specific information to setup your boiler to ensure proper operation.

WARNING

LP Conversions - K2 boiler setup from factory is configured for use with natural gas installed from 0 - 2000 ft above sea level only. For conversion to LP at altitude above 2000 ft., please follow these specific instructions before converting for use with LP. If the information in these instructions is not followed exactly, a fire, an explosion or production of carbon monoxide may result causing property damage, personal injury or loss of life. The qualified service agency is responsible for proper installation of this boiler for use with LP gas. The installation is not proper and complete until the operation of the converted appliance is checked as specified in the manufacturer's instructions supplied.

DANGER

These instructions include a procedure for adjusting the air-fuel mixture on this boiler. This procedure requires a combustion analyzer to measure the CO_2 (or Oxygen) and Carbon Monoxide (CO) levels in flue gas. Adjusting the air-fuel mixture without a proper combustion analyzer could result in unreliable boiler operation, personal injury, or death due to carbon monoxide poisoning.

WARNING

Failure to setup the Boiler in accordance with these instructions could result in high amount of Carbon Monoxide to be produced which could result in death, serious injury, and/or reduced component life.

Adjusting Boiler Type (must be completed first)

Select the correct K2 boiler size and altitude range using the touch screen display as follows:

1. Check boiler's label for actual boiler size.
2. Confirm installation altitude
3. Power up the boiler. The display will show the Home screen.
4. Press "Adjust" button on the Home screen.
5. Press "Adjust" button on the Adjust Mode screen.
6. Press "Login" button to access Password screen.
7. Press 5-digit display to open a keypad. **Enter the password "86"** and press the return arrow to close keypad. Press "Save" button.
8. Press "Adjust" button to enter Adjustment Mode.
9. Press "Modulation Setup" menu button.
10. Press "Adjust" button on the Boiler Type screen.
11. Use the ↓ ↑ arrow buttons to select the correct size **and** altitude of your boiler. Press the (Check with Circle) button to enter your selection.
12. Press "Enter" button until display stops blinking, press next and repeat until "Completed" is displayed.
13. Press X to exit

Basic Setup Procedure for K2 High Altitude Natural Gas

1. Start and force to hi fire
2. Measure CO_2 and bring into window via throttle screw
3. Measure CO, if less than <150 ppm boiler can be placed into service

4. If CO is greater than > 150 ppm reduce rate via throttle to lower CO_2 staying in window.
5. If CO does not go below 150 ppm, reduce fan speed 100 rpm at a time until CO is less than < 150 ppm.
6. Be sure to replace the screw cap in the vent adapter when combustion testing is complete.

K2 Altitude Start-up Instructions for Natural Gas and LP

1. Confirm K2 boiler size, type and installed altitude prior to startup. Install boiler in accordance with the K2 Installation manual included with boiler.
2. Instructions Unique to LP Boilers: Final settings for high altitude installations are shown for CO_2 and CO(Air-Free) Maximum in Table B1 of this supplement. Set the throttle screw to its preliminary setting for LP (see Table B2).
   a. Turn the throttle screw clockwise until it stops (several full turns)
   b. Turn throttle screw counter-clockwise the exact number of turns shown in Table B2.
3. Start boiler as described in boiler Installation manual and lock boiler in high fire (See XI. Startup and Checklist). If boiler does not light, turn throttle screw in 1/8 turn increments in a counterclockwise direction until boiler fires. Do not stop here, follow Steps 4-7.

   Verify that the gas inlet pressure is between the following limits with all gas appliances (including the converted boiler) both on and off:
   - Natural Gas: 4 - 14.0 inches w.c.
   - LP Gas: 11.0 - 14.0 inches w.c.

   If inlet pressure is not within limits, adjust before preforming high altitude setup procedure.
4. After 5 minutes of operation check CO_2 and CO (Air-Free) and ensure it is within the limits outlined in Table B1 of this Supplement. Air-Free Carbon Monoxide in Flue Gas must be less than 200 ppm during all operation. If CO(Air-Free) and CO_2 is within these limits, move to Step 6 and check fan speed at high fire operation only.
5. If CO_2 is outside the window outlined in Table B1 of this Supplement, adjust throttle screw such that the CO_2 falls in this range while boiler is locked manually in high fire. Turning throttle screw counter-clockwise increases the CO_2, while clockwise rotation leans the mixture, reducing the CO_2. Once CO_2 is within the limits in Table B1 of this Supplement, check CO (Air-Free) again to ensure it is below 200 ppm. If CO (Air-Free) is above 200 ppm turn throttle screw clockwise in 1/8 increments until CO (Air-Free) is below 200 ppm, while ensuring CO_2 remains in the range specified in Table B1 of this Supplement. If CO (Air-Free) is still above 200 ppm, reduce fan speed in 100 rpm increments until CO (Air-Free) is less than 200 ppm.
6. Start boiler five times at the above settings to ensure boiler lights off without delay and without noise. Check CO_2 and CO (Air-Free) to ensure that the CO_2 is within the range specified in Table B1 of this Supplement and CO (Air-Free) is below 200 ppm. Be sure to replace the screw cap in the vent adapter when combustion testing is complete.
7. Verify that the gas inlet pressure is between the following limits with all gas appliances (including the converted boiler) both on and off:
   - Natural Gas: 4 - 14.0 inches w.c.
   - LP Gas: 11.0 - 14.0 inches w.c.

   If inlet pressure is not within limits, adjust before preforming high altitude setup procedure.

Table B1: K2 Altitude Adjustments (Above 2000 ft. only)

Model No.	Fuel	Measured CO_2			Approximate De-rate per 1000 Ft.		
		2000-4500 ft.	4501-7800 ft.	7801-10,200 ft.	Derate/1000 ft. 2000-4500 ft.	Derate/1000 ft. 4501-7800 ft.	Derate/1000 ft. 7801-10,200 ft.
K2-080	NG	8.7-9.2	8.7-9.1	8.7-9.1	0%	0%	0%
	LP						
K2-100	NG	8.5-9.3	8.5-9.3	8.5-9.3	0%	0%	0.7%
	LP	10.0-10.3	9.9-10.2	9.8-10.1	0%	0.9%	1.0%
K2-120	NG	8.8-9.3	8.8-9.3	8.8-9.3	0%	0%	0.6%
	LP	9.9-10.2	9.9-10.2	9.5-9.8	0%	0.5%	0.6%
K2-150	NG	8.6-9.3	8.6-9.3	8.6-9.3	0%	0.4%	1.0%
	LP	9.8-10.3	9.8-10.3	9.8-10.1	0.3%	1.2%	1.4%
K2-180	NG	8.5-9.1	8.5-9.1	8.5-9.1	2.0%	1.9%	1.7%
	LP	9.9-10.3	9.9-10.2	No application	2.5%	2.4%	No application

NOTE: THESE DE-RATES ARE AT MINIMUM VENT LENGTH Max. Vent Length 135 eq. feet (3 inch Intake/Vent Pipe)

Table B2: K2 LP Conversion Only

Model No.	# Counter-Clockwise Turns (From Fully Closed)
K2-080	3-3/4
K2-100	3
K2-120	4
K2-150	2-3/4
K2-180	6-1/2

Appendix C: Special Requirements For Side-Wall Vented Appliances In The Commonwealth of Massachusetts

IMPORTANT

The Commonwealth of Massachusetts requires compliance with regulation 248 CMR 4.00 and 5.00 for installation of side-wall vented gas appliances as follows:

(a) For all side wall horizontally vented gas fueled equipment installed in every dwelling, building or structure used in whole or in part for residential purposes, including those owned or operated by the Commonwealth and where the side wall exhaust vent termination is less than seven (7) ft. above finished grade in the area of the venting, including but not limited to decks and porches, the following requirements shall be satisfied:

1. INSTALLATION OF CARBON MONOXIDE DETECTORS. At the time of installation of the side wall horizontal vented gas fueled equipment, the installing plumber or gas fitter shall observe that a hard wired carbon monoxide detector with an alarm and battery back-up is installed on the floor level where the gas equipment is to be installed. In addition, the installing plumber or gas fitter shall observe that a battery operated or hard wired carbon monoxide detector with an alarm is installed on each additional level of the dwelling, building or structure served by the side wall horizontal vented gas fueled equipment. It shall be the responsibility of the property owner to secure the services of qualified licensed professionals for the installation of hard wired carbon monoxide detectors.

a. In the event that the side wall horizontally vented gas fueled equipment is installed in a crawl space or an attic, the hard wired carbon monoxide detector with alarm and battery back-up may be installed on the next adjacent floor level.

b. In the event that the requirements of this subdivision can not be met at the time of completion of installation, the owner shall have a period of thirty (30) days to comply with the above requirements; provided, however, that during said thirty (30) day period, a battery operated carbon monoxide detector with an alarm shall be installed.

2. APPROVED CARBON MONOXIDE DETECTORS. Each carbon monoxide detector as required in accordance with the above provisions shall comply with NFPA 720 and be ANSI/UL 2034 listed and IAS certified.

3. SIGNAGE. A metal or plastic identification plate shall be permanently mounted to the exterior of the building at a minimum height of eight (8) ft. above grade directly in line with the exhaust vent terminal for the horizontally vented gas fueled heating appliance or equipment. The sign shall read, in print size no less than one-half (1/2) inch in size, “GAS VENT DIRECTLY BELOW. KEEP CLEAR OF ALL OBSTRUCTIONS”.

4. INSPECTION. The state or local gas inspector of the side wall horizontally vented gas fueled equipment shall not approve the installation unless, upon inspection, the inspector observes carbon monoxide detectors and signage installed in accordance with the provisions of 248 CMR 5.08(2)(a)1 through 4.

(b) EXEMPTIONS: The following equipment is exempt from 248 CMR 5.08(2)(a)1 through 4:

1. The equipment listed in Chapter 10 entitled “Equipment Not Required To Be Vented” in the most current edition of NFPA 54 as adopted by the Board; and

2. Product Approved side wall horizontally vented gas fueled equipment installed in a room or structure separate from the dwelling, building or structure used in whole or in part for residential purposes.

(c) MANUFACTURER REQUIREMENTS - GAS EQUIPMENT VENTING SYSTEM PROVIDED. When the manufacturer of Product Approved side wall horizontally vented gas equipment provides a venting system design or venting system components with the equipment, the instructions provided by the manufacturer for installation of the equipment and the venting system shall include:

1. Detailed instructions for the installation of the venting system design or the venting system components; and

2. A complete parts list for the venting system design or venting system.

(d) MANUFACTURER REQUIREMENTS - GAS EQUIPMENT VENTING SYSTEM NOT PROVIDED. When the manufacturer of a Product Approved side wall horizontally vented gas fueled equipment does not provide the parts for venting the flue gases, but identifies “special venting systems”, the following requirements shall be satisfied by the manufacturer:

1. The referenced “special venting system” instructions shall be included with the appliance or equipment installation instructions; and

2. The “special venting systems” shall be Product Approved by the Board, and the instructions for that system shall include a parts list and detailed installation instructions.

(e) A copy of all installation instructions for all Product Approved side wall horizontally vented gas fueled equipment, all venting instructions, all parts lists for venting instructions, and/or all venting design instructions shall remain with the appliance or equipment at the completion of the installation.

SERVICE RECORD

DATE	SERVICE PERFORMED

SERVICE RECORD

DATE	SERVICE PERFORMED

U.S. Boiler Company, Inc.
P.O. Box 3020
Lancaster, PA 17604
1-888-432-8887
www.usboiler.net

105294-05 - 5/15