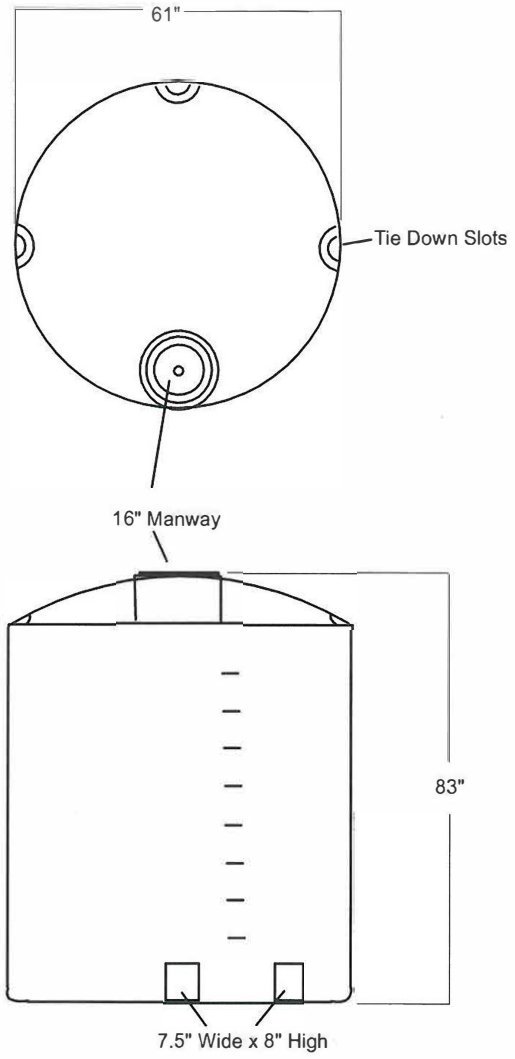

41067
960 USG - 3634 LITER
800 IMP GALLON

NORWESCO CANADA

800 Imperial Gallons

This document contains proprietary information. It is intended solely for use of potential clients involved or to be involved in a transaction with BARR Plastics Inc.

© 2019 BARR PLASTICS INC