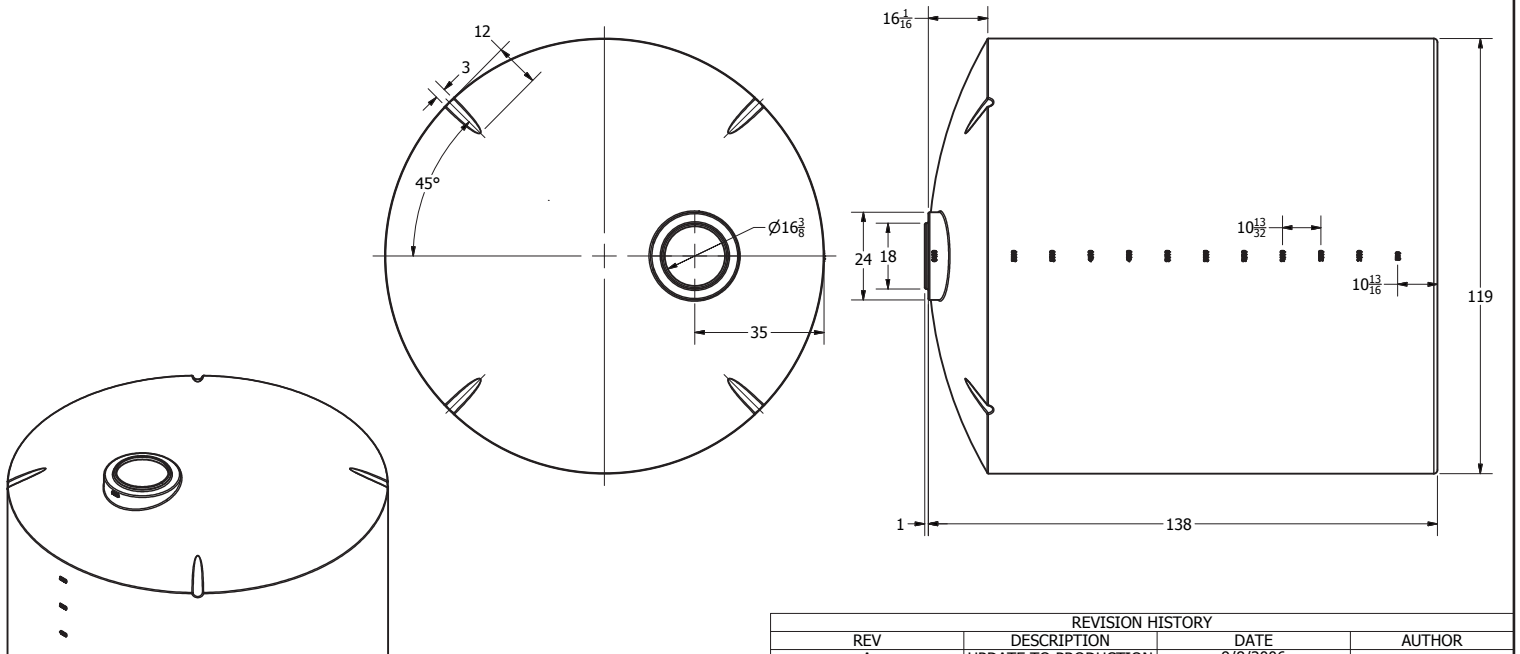

REVISION HISTORY			
REV	DESCRIPTION	DATE	AUTHOR
A	UPDATE TO PRODUCTION	9/8/2006	
B	REDRAWN	7/9/2013	Michael Holden

DRAWN Jerry Paulson	5/19/1995	NORWESCO, INC. SAINT BONIFACIUS, MN
CHECKED		TITLE
QA		6100 GALLON VERTICAL STORAGE TANK
MFG		
APPROVED		SIZE B / DWG NO / REV B
		SCALE: 1/16 / SHEET 1 OF 1

This document contains proprietary information. It is intended solely for use of potential clients involved or to be involved in a transaction with BARR Plastics Inc. Such proprietary information may not be used, reproduced, or disclosed for any other purpose without the expressed written permission.

© 2019 BARR PLASTICS INC