PROPRIETARY DATA

PROPERTY OF ACE ROTO-MOLD MFG., INC. INFORMATION FURNISHED HEREIN IS THE PROPERTY OF ACE ROTO-MOLD MFG., INC.AND SHALL NOT BE USED, DISCLOSED TO OTHERS, OR COPIED WITHOUT THE EXPRESSED WRITTEN CONSENT OF ACE ROTO-MOLD MFG., INC. ALL RIGHTS RESERVED.

VT0075-23 B

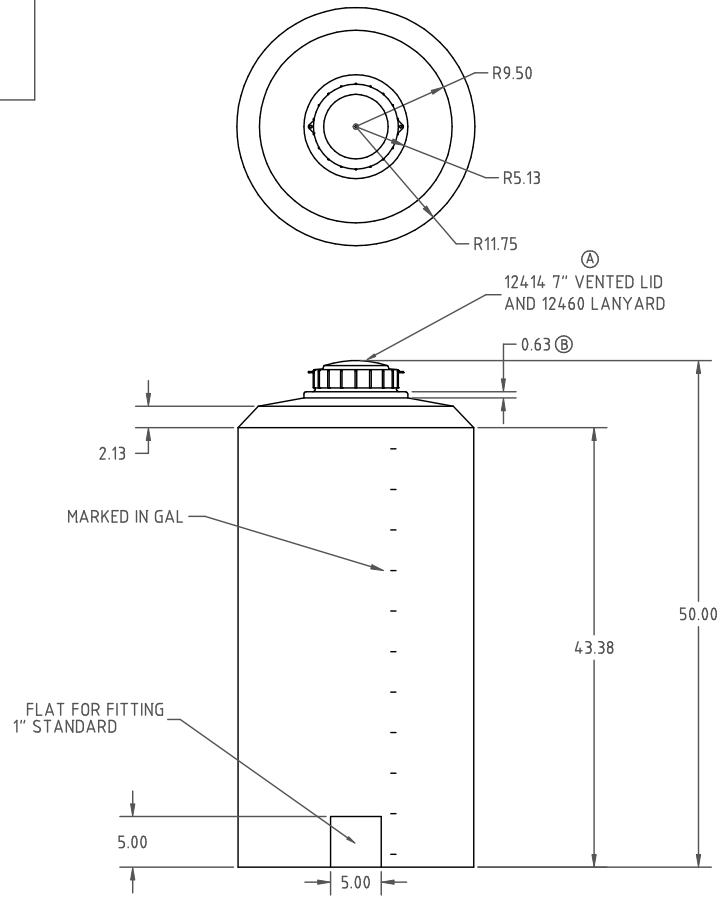

REV	DESCRIPTION	DATE	APPRD.
B	ADDED LID BOSS CCN 1415	DHJ 8/8/07	
A	CHANGE TO 7" LID CCN 1374	GWC 6/29/07	

ALL DIMENSIONS ARE IN DECIMAL INCHES
TOLERANCES UNLESS OTHERWISE SPECIFIED
±1% @ 68° F

DRAWN /DATE
DHJ 3/29/05

APPRD. /DATE
GWC 6/29/07

THIRD ANGLE PROJECTION
ANSI 14.5M

MATERIAL / SHOT WEIGHT
HDPE / 28 LBS.

NOTES:
1. BLACK, WHITE, OR YELLOW COLOR
2. NOM. WALL .200

Ace Roto-Mold
A DIVISION OF DEN HARTOG INDUSTRIES, INC.

CLIENT / DESCRIPTION
75 GALLON VERTICAL TANK

SCALE
NONE

PART NO.
VT0075-23

This document contains proprietary information. It is intended solely for use of potential clients involved or to be involved in a transaction with BARR Plastics Inc. Such proprietary information may not be used, reproduced, or disclosed for any other purpose without the expressed written permission.

© 2019 BARR PLASTICS INC