PROPRIETARY DATA

PROPERTY OF ACE ROTO-MOLD MFG., INC. INFORMATION FURNISHED HEREIN IS THE PROPERTY OF ACE ROTO-MOLD MFG., INC. AND SHALL NOT BE USED, DISCLOSED TO OTHERS, OR COPIED WITHOUT THE EXPRESSED WRITTEN CONSENT OF ACE ROTO-MOLD MFG., INC. ALL RIGHTS RESERVED.

CB0200-42

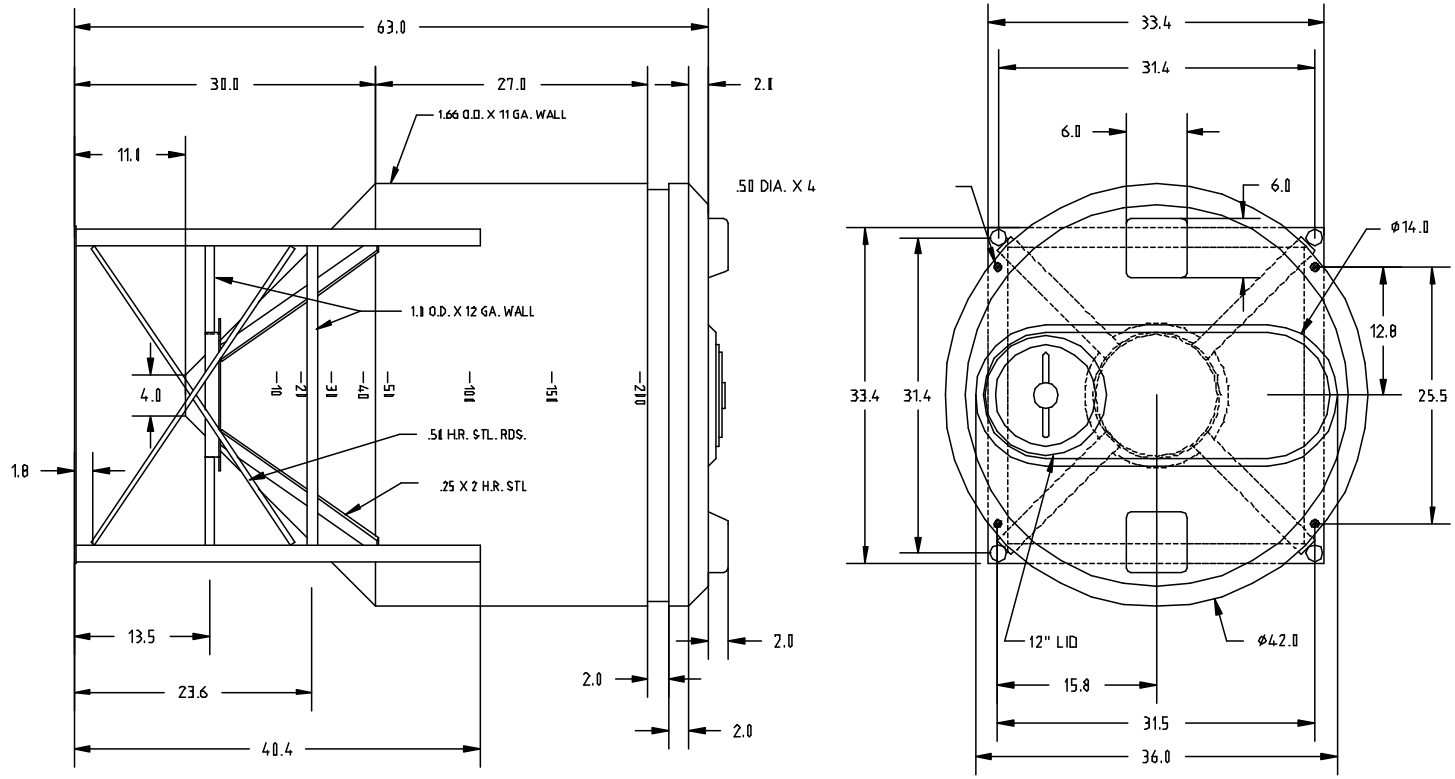

REV	DESCRIPTION	DATE	APPRD

DRAWN / DATE: REH 8/27/97

APPRD. / DATE: RECH 8/27/97

MATERIAL

ALL DIMENSIONS ARE IN DECIMAL INCHES
TOLERANCES UNLESS OTHERWISE SPECIFIED
± 1% @ 68° F

THIRD ANGLE PROJECTION
ANSI 14.5M

NOTES:
1. TANK WEIGHT 75 LBS.
2. STAND WEIGHT 82 LBS.

Ace Roto-Mold
A DIVISION OF DON HANTOS INDUSTRIES INC.
4018 HWY. 61 BLVD., BOX 421, HOSPERS, IOWA 51238

CLIENT / DESCRIPTION: 200 GALLON CONE BOTTOM TANK AND STAND

SCALE: N.S.

PART NO.: CB0200-42

This document contains proprietary information. It is intended solely for use of potential clients involved or to be involved in a transaction with BARR Plastics Inc. Such proprietary information may not be used, reproduced, or disclosed for any other purpose without the expressed written permission.

© 2019 BARR PLASTICS INC