PROPRIETARY DATA
PROPERTY OF DEN HARTOG INDUSTRIES, INC. INFORMATION FURNISHED HEREIN IS THE PROPERTY OF DEN HARTOG INDUSTRIES, INC. AND SHALL NOT BE USED, DISCLOSED TO OTHERS, OR COPIED WITHOUT THE EXPRESSED WRITTEN CONSENT OF DEN HARTOG INDUSTRIES, INC. ALL RIGHTS RESERVED.

CB1700-86 C

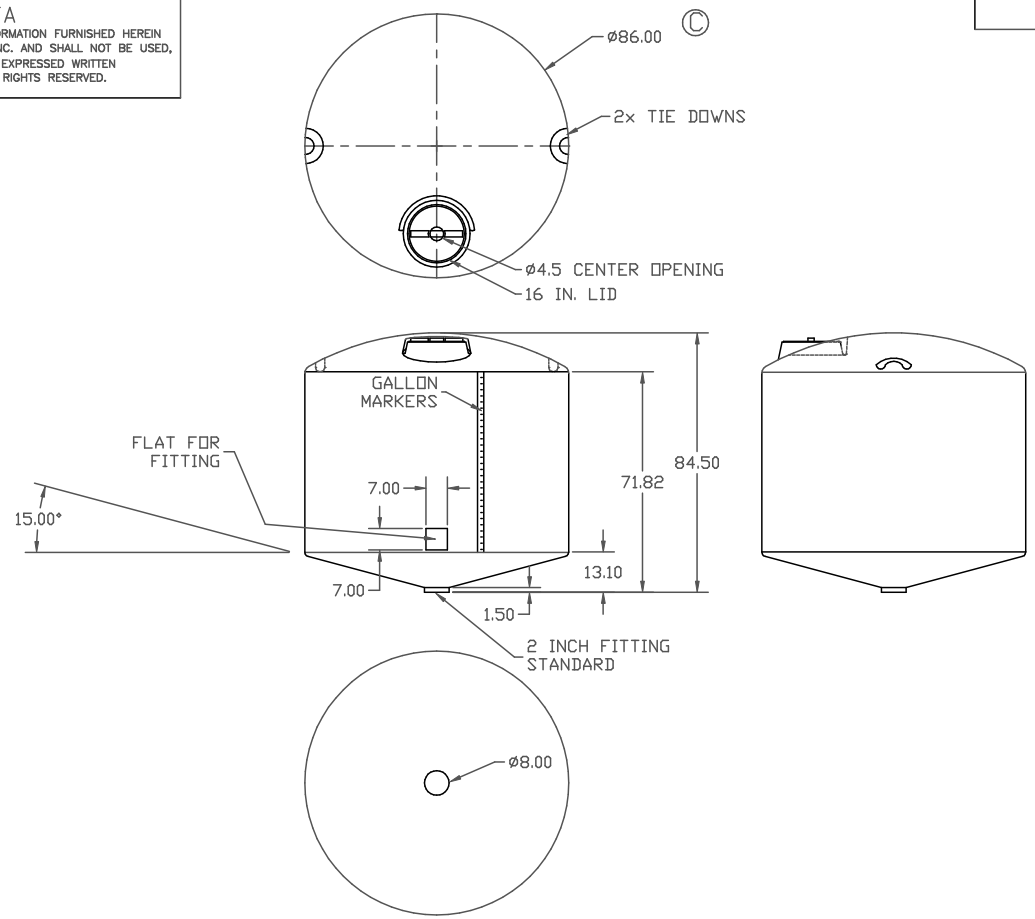


| REV | DESCRIPTION | DATE | APPRD |
|---|---|---|---|
| C | DIA WAS 85, WEIGHT WAS 300 LBS | 7/31/06 | NVE |
| B | UPDATE DIMENSIONS | 6/29/06 | NVE |
| A | CHANGE WEIGHT TO 300 | 9/12/05 | |

DRAWN / DATE: DHJ 7/11/03

APPRD. / DATE

MATERIAL: HDPE OR EQUIVALENT REFERENCE MATERIAL DATA SHEET FOR SPECIFIC PROPERTIES.

ALL DIMENSIONS ARE IN DECIMAL INCHES
TOLERANCES UNLESS OTHERWISE SPECIFIED
± 1% @ 68° F

THIRD ANGLE PROJECTION ANSI 14.5M

NOTES:
1. WHITE OR YELLOW COLOR
2. SHOT WEIGHT 284 LBS.

ACE ROTO-MOLD
A DIVISION OF DEN HARTOG INDUSTRIES, INC.
4010 HWY. 60 BLVD., BOX 425, HOSPERS, IOWA 51238

CLIENT / DESCRIPTION: 1700 GALLON, ø86.00 CONE BOTTOM TANK

SCALE: N.S.

PART NO.: CB1700-86

This document contains proprietary information. It is intended solely for use of potential clients involved or to be involved in a transaction with BARR Plastics Inc. Such proprietary information may not be used, reproduced, or disclosed for any other purpose without the expressed written permission.

© 2019 BARR PLASTICS INC