PROPRIETARY DATA

PROPERTY OF DEN HARTOG INDUSTRIES, INC. INFORMATION FURNISHED HEREIN IS THE PROPERTY OF DEN HARTOG INDUSTRIES, INC. AND SHALL NOT BE USED, DISCLOSED TO OTHERS, OR COPIED WITHOUT THE EXPRESSED WRITTEN CONSENT OF DEN HARTOG INDUSTRIES, INC. ALL RIGHTS RESERVED.

CB2500-90 C

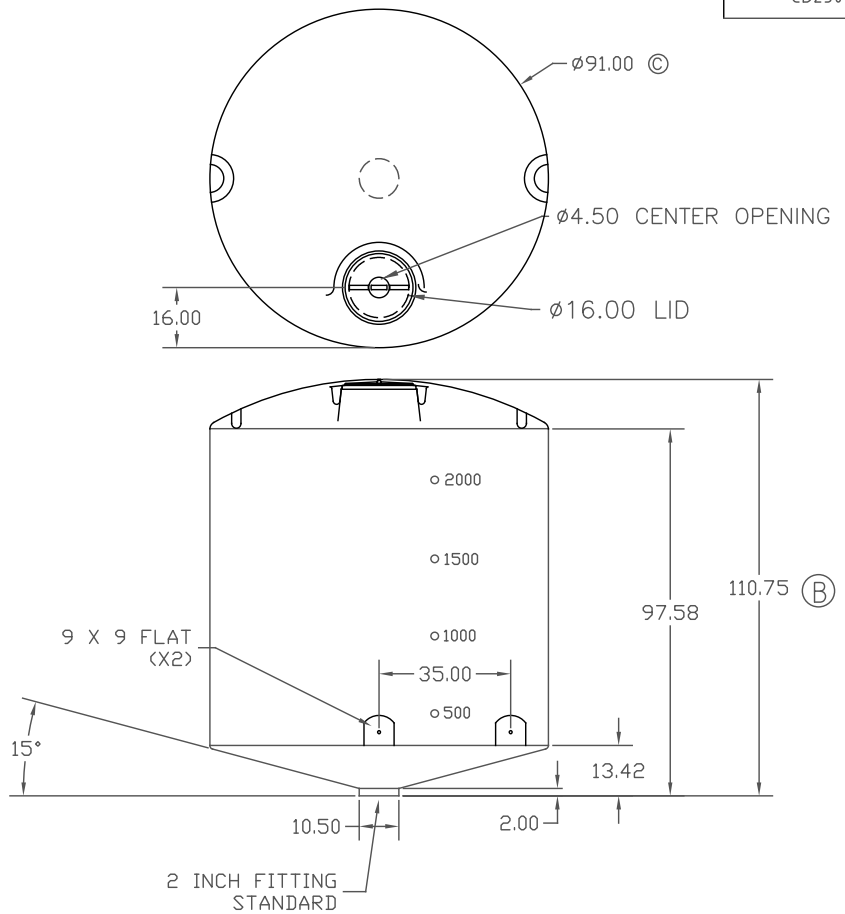

REV	DESCRIPTION	DATE	APPRD	CCN
C	WAS 90	5/11/17	DHJ	3385
B	HEIGHT WAS 108.75	6/28/06	NVE	
A	ISOLATED TANK FROM STAND	6/13/06	NVE	

DRAWN / DATE: DHJ 10/7/04

APPRD. / DATE: REH 4/18/07

MATERIAL: MDPE OR EQUIVALENT
REFERENCE MATERIAL DATA SHEET FOR SPECIFIC PROPERTIES.

ALL DIMENSIONS ARE IN DECIMAL INCHES
TOLERANCES UNLESS OTHERWISE SPECIFIED
± 1% @ 68° F

THIRD ANGLE PROJECTION
ANSI 14.5M

NOTES:
1. SHOT WEIGHT 435 LBS.

ACE ROTO-MOLD
A DIVISION OF DEN HARTOG INDUSTRIES, INC.
4010 HWY. 60 BLVD., BOX 425, HOSPERS, IOWA 51238

CLIENT / DESCRIPTION: 2500 GALLON ø90" 15° CONE BOTTOM TANK

SCALE: N.S.

PART NO.: CB2500-90

This document contains proprietary information. It is intended solely for use of potential clients involved or to be involved in a transaction with BARR Plastics Inc. Such proprietary information may not be used, reproduced, or disclosed for any other purpose without the expressed written permission.

© 2019 BARR PLASTICS INC