PROPRIETARY DATA

PROPERTY OF DEN HARTOG INDUSTRIES, INC. INFORMATION FURNISHED HEREIN IS THE PROPERTY OF DEN HARTOG INDUSTRIES, INC. AND SHALL NOT BE USED, DISCLOSED TO OTHERS, OR COPIED WITHOUT THE EXPRESSED WRITTEN CONSENT OF DEN HARTOG INDUSTRIES, INC. ALL RIGHTS RESERVED.

CB2600-90 A

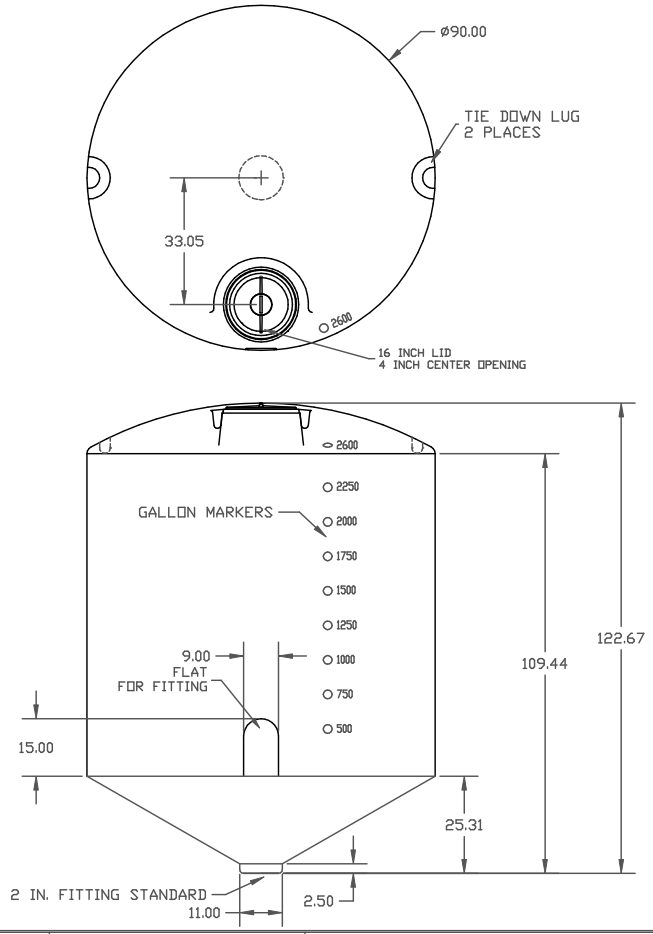

REV	DESCRIPTION	DATE	APPRD
A	ISOLATED TANK AND STAND	6/13/06	NVE

DRAWN / DATE: DHJ 3/30/06

APPRD. / DATE: REH 4/18/07

MATERIAL: HDPE OR EQUIVALENT

ALL DIMENSIONS ARE IN DECIMAL INCHES
TOLERANCES UNLESS OTHERWISE SPECIFIED
± 1% @ 68° F

THIRD ANGLE PROJECTION
ANSI 14.5M

NOTES:
1. SHOT WEIGHT 500 LBS.

Ace Roto-Mold
A DIVISION OF DEN HARTOG INDUSTRIES, INC.
4010 HWY. 60 BLVD., BOX 425, HOSPERS, IOWA 51238

CLIENT / DESCRIPTION: 2600 GALLON CONE BOTTOM TANK 30 DEG

SCALE: N.S.

PART NO.: CB2600-90

This document contains proprietary information. It is intended solely for use of potential clients involved or to be involved in a transaction with BARR Plastics Inc. Such proprietary information may not be used, reproduced, or disclosed for any other purpose without the expressed written permission.

© 2019 BARR PLASTICS INC