PROPRIETARY DATA

PROPERTY OF DEN HARTOG INDUSTRIES, INC. INFORMATION FURNISHED HEREIN IS THE PROPERTY OF DEN HARTOG INDUSTRIES, INC.AND SHALL NOT BE USED, DISCLOSED TO OTHERS, OR COPIED WITHOUT THE EXPRESSED WRITTEN CONSENT OF DEN HARTOG INDUSTRIES, INC. ALL RIGHTS RESERVED.

CB4600–102 A

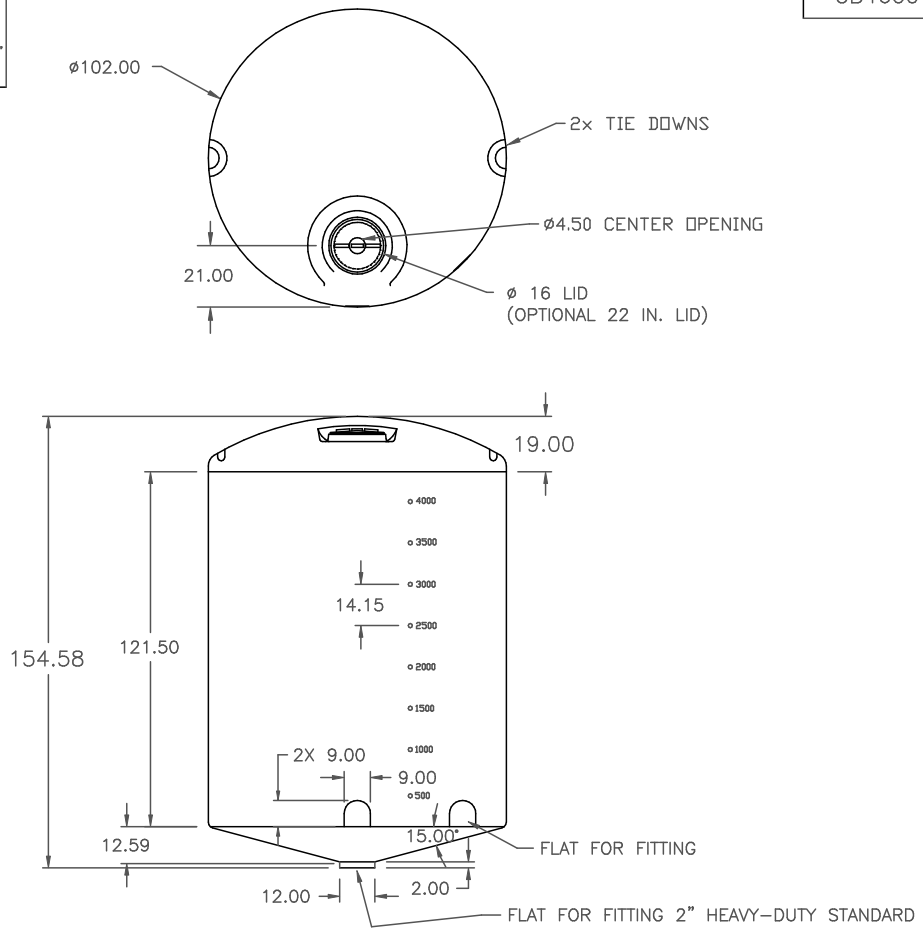

REV	DESCRIPTION	DATE	APPRD
A	ADDED TOTAL HEIGHT DIM.	6/29/06	NVE

DRAWN / DATE: DHJ 4/15/04

APPRD. / DATE: REH 4/18/07

MATERIAL: HDPE OR EQUIVALENT REFERENCE MATERIAL DATA SHEET FOR SPECIFIC PROPERTIES.

ACE ROTO–MOLD
A DIVISION OF DEN HARTOG INDUSTRIES, INC.
4010 HWY. 60 BLVD., BOX 425, HOSPERS, IOWA 51238

CLIENT / DESCRIPTION: 4600 GALLON ø102" 15° CONE BOTTOM TANK

ALL DIMENSIONS ARE IN DECIMAL INCHES
TOLERANCES UNLESS OTHERWISE SPECIFIED
± 1% @ 68° F

THIRD ANGLE PROJECTION
ANSI 14.5M

NOTES:

1. WHITE OR YELLOW COLOR
2. SHOT WEIGHT 1200 LBS.

SCALE: N.S.

PART NO.: CB4600–102

This document contains proprietary information. It is intended solely for use of potential clients involved or to be involved in a transaction with BARR Plastics Inc. Such proprietary information may not be used, reproduced, or disclosed for any other purpose without the expressed written permission.

© 2019 BARR PLASTICS INC