PROPRIETARY DATA

PROPERTY OF ACE ROTO–MOLD MFG., INC. INFORMATION FURNISHED HEREIN IS THE PROPERTY OF ACE ROTO–MOLD MFG., INC.AND SHALL NOT BE USED, DISCLOSED TO OTHERS, OR COPIED WITHOUT THE EXPRESSED WRITTEN CONSENT OF ACE ROTO–MOLD MFG., INC. ALL RIGHTS RESERVED.

CB4900–102 A

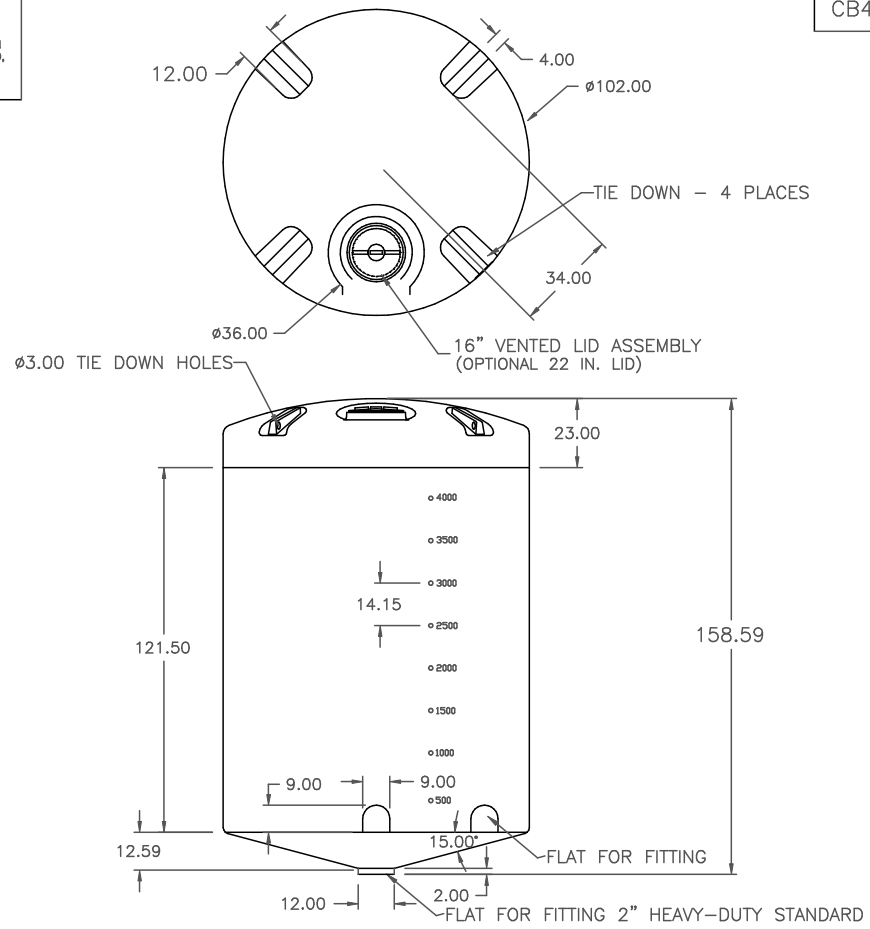

REV	DESCRIPTION	DATE	APPRD
A	FINALIZE DRAWING	12\2\04	

DRAWN / DATE: DHJ 4/14/04

APPRD. / DATE

MATERIAL: HDPE OR EQUIVALENT REFERENCE MATERIAL DATA SHEET FOR SPECIFIC PROPERTIES.

ACE ROTO–MOLD
A DIVISION OF DEN HARTOG INDUSTRIES, INC.
4010 HWY. 60 BLVD., BOX 425, HOSPERS, IOWA 51238

CLIENT / DESCRIPTION: 4900 GALLON ø102" 15° CONE BOTTOM TANK

ALL DIMENSIONS ARE IN DECIMAL INCHES
TOLERANCES UNLESS OTHERWISE SPECIFIED
± 1% @ 68° F

THIRD ANGLE PROJECTION
ANSI 14.5M

NOTES:

1. YELLOW OR WHITE COLOR
2. SHOT WEIGHT 1300 LBS.

SCALE: N.S.

PART NO.: CB4900–102

This document contains proprietary information. It is intended solely for use of potential clients involved or to be involved in a transaction with BARR Plastics Inc. Such proprietary information may not be used, reproduced, or disclosed for any other purpose without the expressed written permission.

© 2019 BARR PLASTICS INC