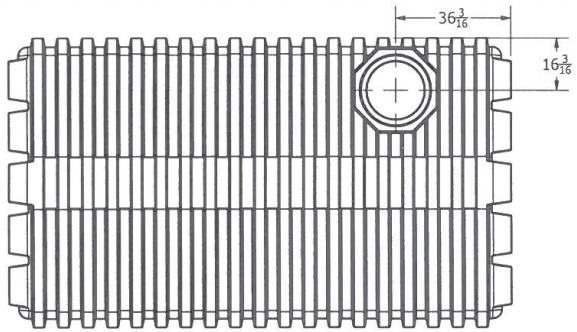

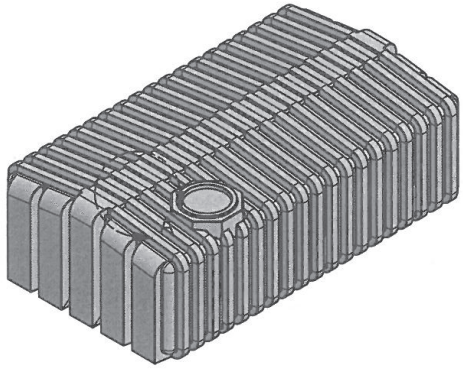

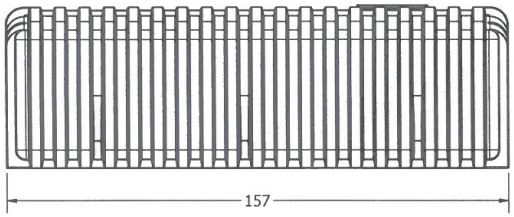

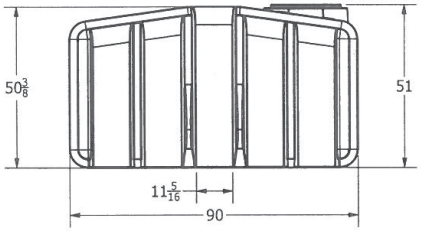

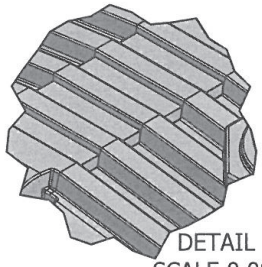

DETAIL A
SCALE 0.08 : 1

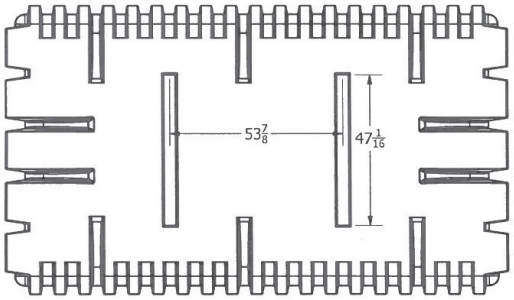

DRAWN Todd Bolzer	4/28/2014	NORWESCO EDMONTON NORWESCO, INC. SAINT BONIFACIUS, MN
CHECKED		TITLE 2100 Imperial 2500 GALLON HORIZONTAL BOX WATER TANK 2500 USG
QA		
MFG		
APPROVED		SIZE B / DWG NO 44335 / REV
		SCALE: 1/16 / SHEET 1 OF 1

This document contains proprietary information. It is intended solely for use of potential clients involved or to be involved in a transaction with BARR Plastics Inc. Such proprietary information may not be used, reproduced, or disclosed for any other purpose without the expressed written permission.

© 2019 BARR PLASTICS INC