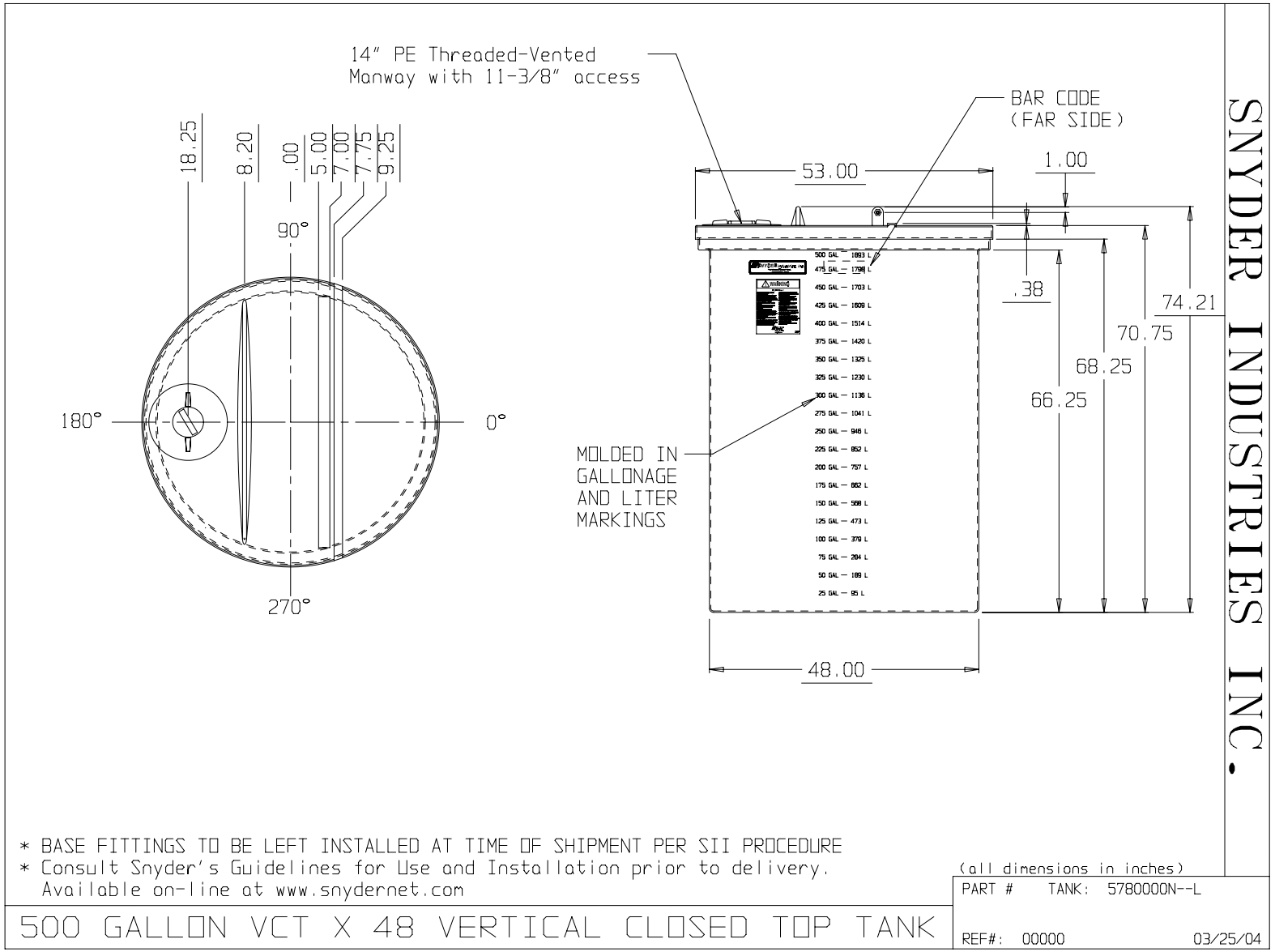

* BASE FITTINGS TO BE LEFT INSTALLED AT TIME OF SHIPMENT PER SII PROCEDURE
* Consult Snyder's Guidelines for Use and Installation prior to delivery. Available on-line at www.snydernet.com

(all dimensions in inches)

PART # TANK: 5780000N--L

REF#: 00000 03/25/04

500 GALLON VCT X 48 VERTICAL CLOSED TOP TANK

This document contains proprietary information. It is intended solely for use of potential clients involved or to be involved in a transaction with BARR Plastics Inc. Such proprietary information may not be used, reproduced, or disclosed for any other purpose without the expressed written permission.

© 2019 BARR PLASTICS INC