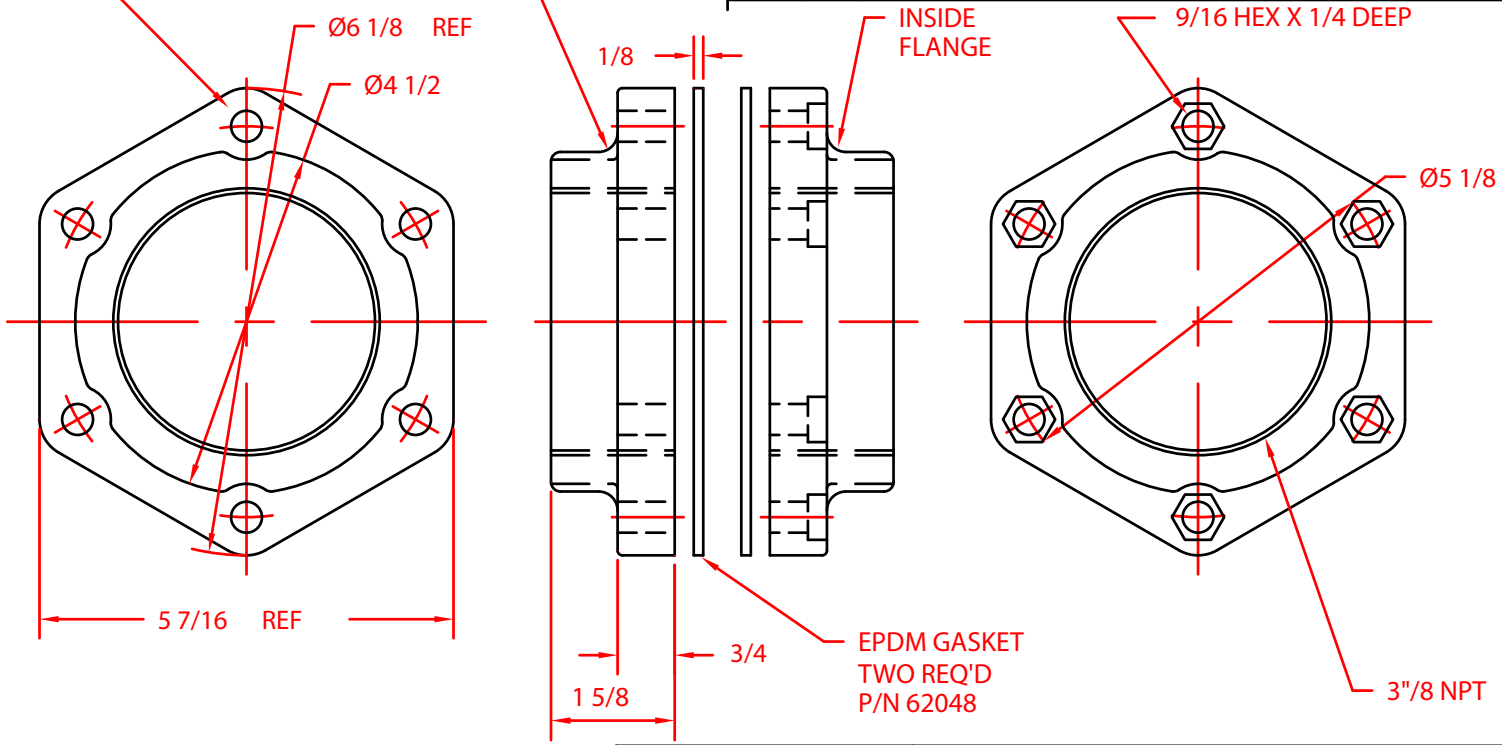

REVISIONS				
ZONE	REV	DESCRIPTION	DATE	APPROVED
	A	COMPONENTS UPDATED, BOLTS WERE 3 LONG	19APR99	

NOTE: ASSEMBLY INCLUDES (6) 316 SS BOLTS, 3/8 X 2 5/8 W/ LW, & NUT

NORWESCO
ST. BONIFACIUS, MN

3" PP DOUBLE THREAD BOLTED FITTING ASSEMBLY

JTP 02NOV98

SIZE	FSCM NO.	DWG NO.	REV
A		62471	A

SCALE 1/2 SHEET

This document contains proprietary information. It is intended solely for use of potential clients involved or to be involved in a transaction with BARR Plastics Inc.

© 2019 BARR PLASTICS INC