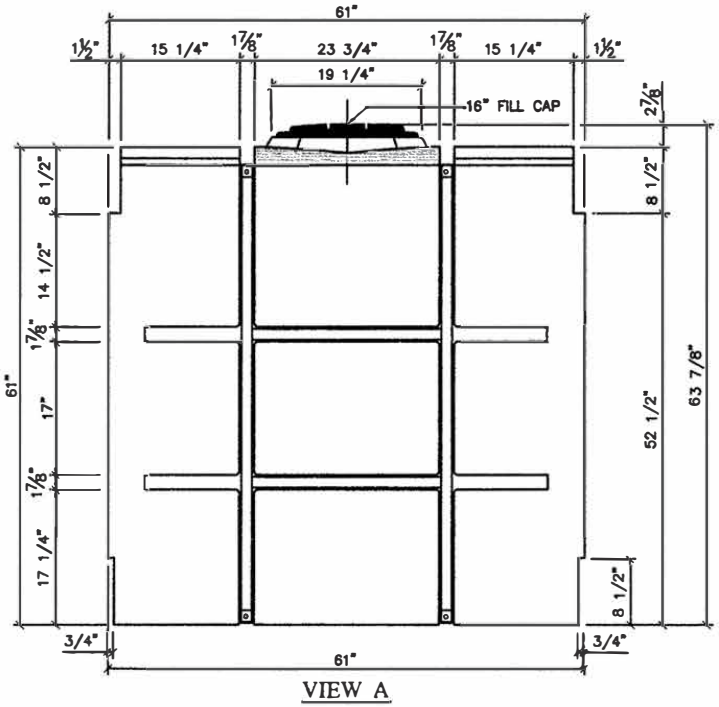

VIEW A

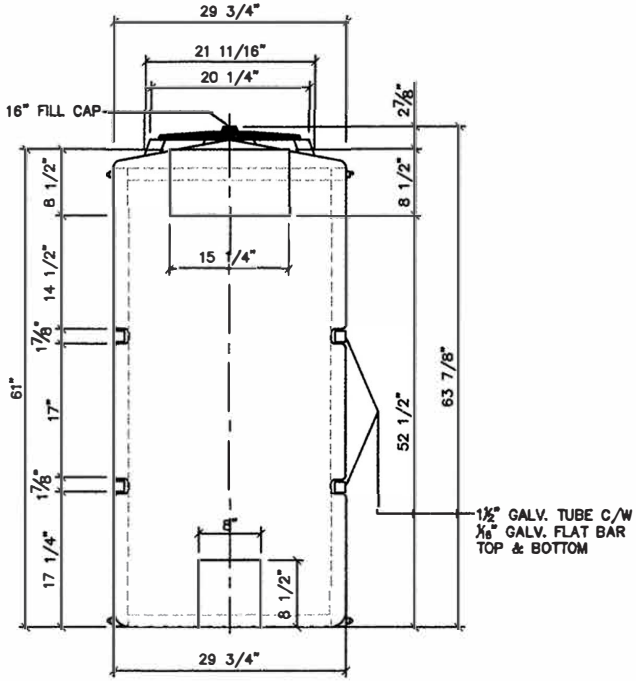

VIEW B

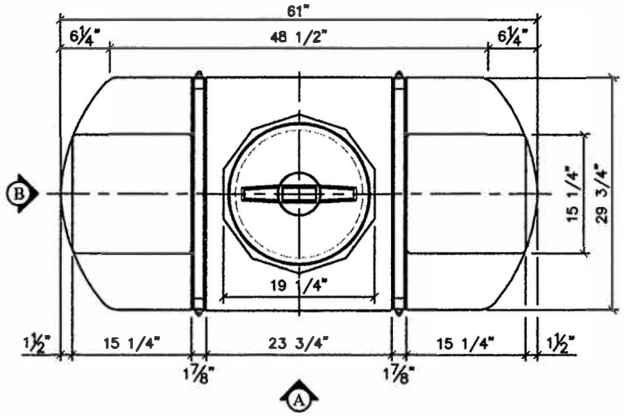

NOTE:
ALL DIMENSIONS ARE IN INCHES UNLESS OTHERWISE SPECIFIED

NORWESCO CANADA

350 IMPERIAL GALLON STORAGE TANK — *420 USG 1590 LITER*

DWG NO:		REV
SCALE: 1:20		

This document contains proprietary information. It is intended solely for use of potential clients involved or to be involved in a transaction with BARR Plastics Inc. Such proprietary information may not be used, reproduced, or disclosed for any other purpose without the expressed written permission.

© 2019 BARR PLASTICS INC