PROPRIETARY DATA

PROPERTY OF ACE ROTO-MOLD MFG., INC. INFORMATION FURNISHED HEREIN IS THE PROPERTY OF ACE ROTO-MOLD MFG., INC. AND SHALL NOT BE USED, DISCLOSED TO OTHERS, OR COPIED WITHOUT THE EXPRESSED WRITTEN CONSENT OF ACE ROTO-MOLD MFG., INC. ALL RIGHTS RESERVED.

OP2700-90

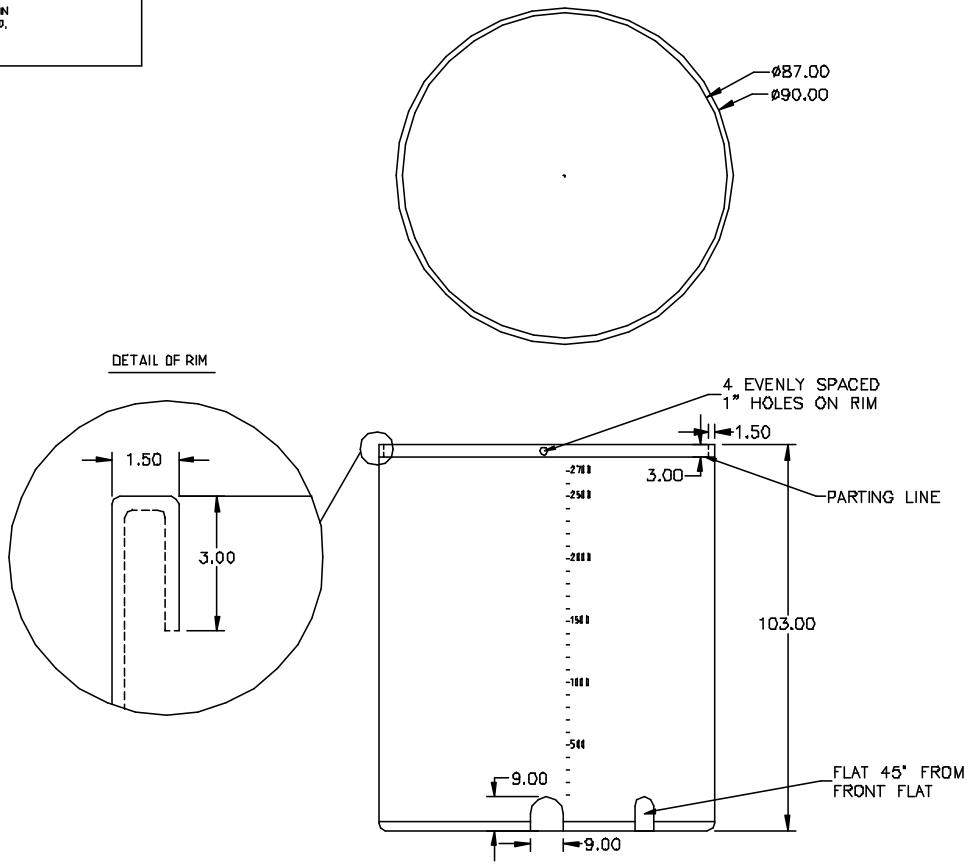

REV	DESCRIPTION	DATE	APPRD

DRAWN / DATE: NVE 6/13/15

APPRD. / DATE: DHJ 6/22/15

MATERIAL: HDPE OR EQUIVALENT REFERENCE MATERIAL DATA SHEET FOR SPECIFIC PROPERTIES.

Ace Roto-Mold
A DIVISION OF DEN HARTOG INDUSTRIES, INC.
4018 HWY. 61 BLVD., BOX 421, HOSPERS, IOWA 51238

ALL DIMENSIONS ARE IN DECIMAL INCHES
TOLERANCES UNLESS OTHERWISE SPECIFIED
± 1% @ 68° F

THIRD ANGLE PROJECTION
ANSI Y14.5M

NOTES:
1. .490 WALL THICKNES AT FLAT
2. WHITE OR COLOR
3. SHOT WEIGHT 480 LBS.

CLIENT / DESCRIPTION: 2700 GALLON OPEN TOP TANK

SCALE: N.S.

PART NO.: OP2700-90

This document contains proprietary information. It is intended solely for use of potential clients involved or to be involved in a transaction with BARR Plastics Inc. Such proprietary information may not be used, reproduced, or disclosed for any other purpose without the expressed written permission.

© 2019 BARR PLASTICS INC