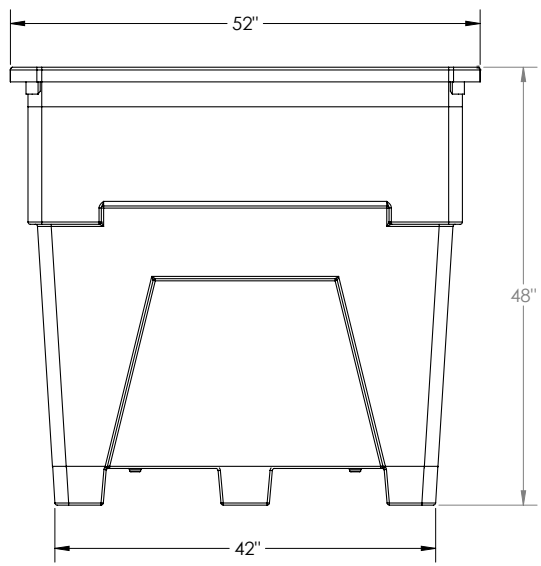

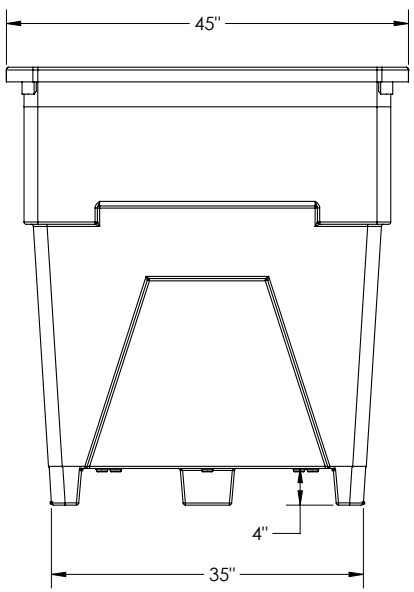

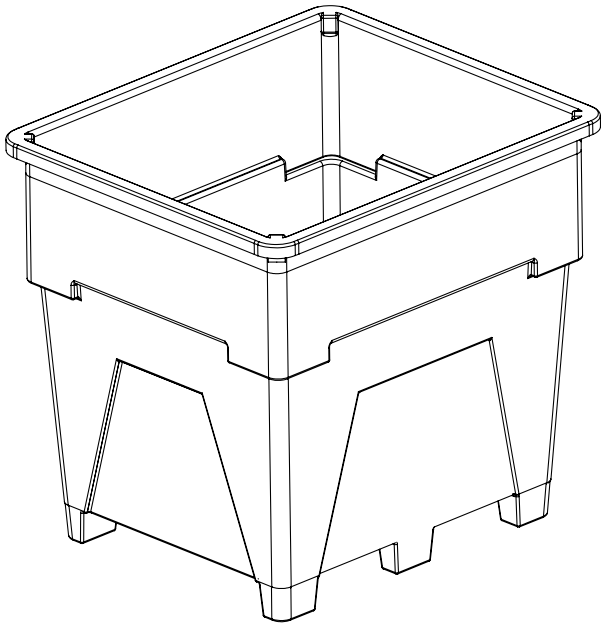

UNLESS OTHERWISE SPECIFIED:		NAME	DATE
DIMENSIONS ARE IN INCHES TOLERANCES: LINEAR ± 0.01 IN/IN WARP ± 0.02 IN/IN RADI ± 15% ANGULAR ± 4.0° WALL THICK ± 20%	DRAWN	BWK	10/14/13
	CHECKED		
	ENG APPR.		
	MFG APPR.		
INTERPRET GEOMETRIC TOLERANCING PER:	Q.A.		
MATERIAL POLYETHYLENE	COMMENTS:		
FINISH			
DO NOT SCALE DRAWING			

TITLE:

SP-300S

SIZE	DWG. NO.	REV
B	10397-01-001	A
SCALE: 1:1	WEIGHT:	SHEET 1 OF 1

PROPRIETARY AND CONFIDENTIAL

THE INFORMATION CONTAINED IN THIS DRAWING IS THE SOLE PROPERTY OF SmaK PLASTICS INC. ANY REPRODUCTION IN PART OR AS A WHOLE WITHOUT THE WRITTEN PERMISSION OF SmaK PLASTICS INC IS PROHIBITED.

This document contains proprietary information. It is intended solely for use of potential clients involved or to be involved in a transaction with BARR Plastics Inc.

© 2019 BARR PLASTICS INC