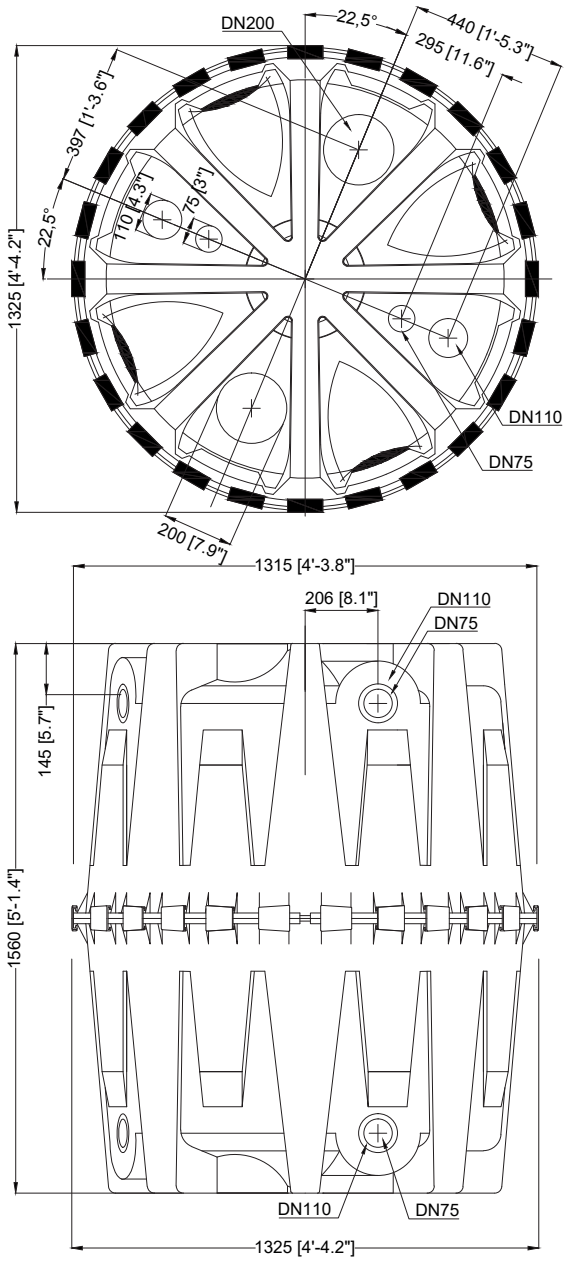

D	GRAF Herkules-Tank 1600 L / 422,7 gal.		Artikel-Nr. product no. article no. articulo no. 320001
GB GRAF Herkules-Tank 1600 L / 422,7 gal.	ES GRAF Depósito Herkules 1600 L / 422,7 gal.	FR GRAF Réservoir Hercule 1600 L / 422,7 gal.	revision
gezeichnet drawn: ISC	Gewicht weight: 56 kg	BARR Plastics Inc Abbotsford, BC info@barrplastics.com barrplastics.com	
Datum date: 2016.12.20	Toleranz tolerance: +/- 3%		
Maßstab scale: M 1:16	Einheiten units: mm [inch] gal. = US gal.		

This document contains proprietary information. It is intended solely for use of potential clients involved or to be involved in a transaction with BARR Plastics Inc.

© 2019 BARR PLASTICS INC