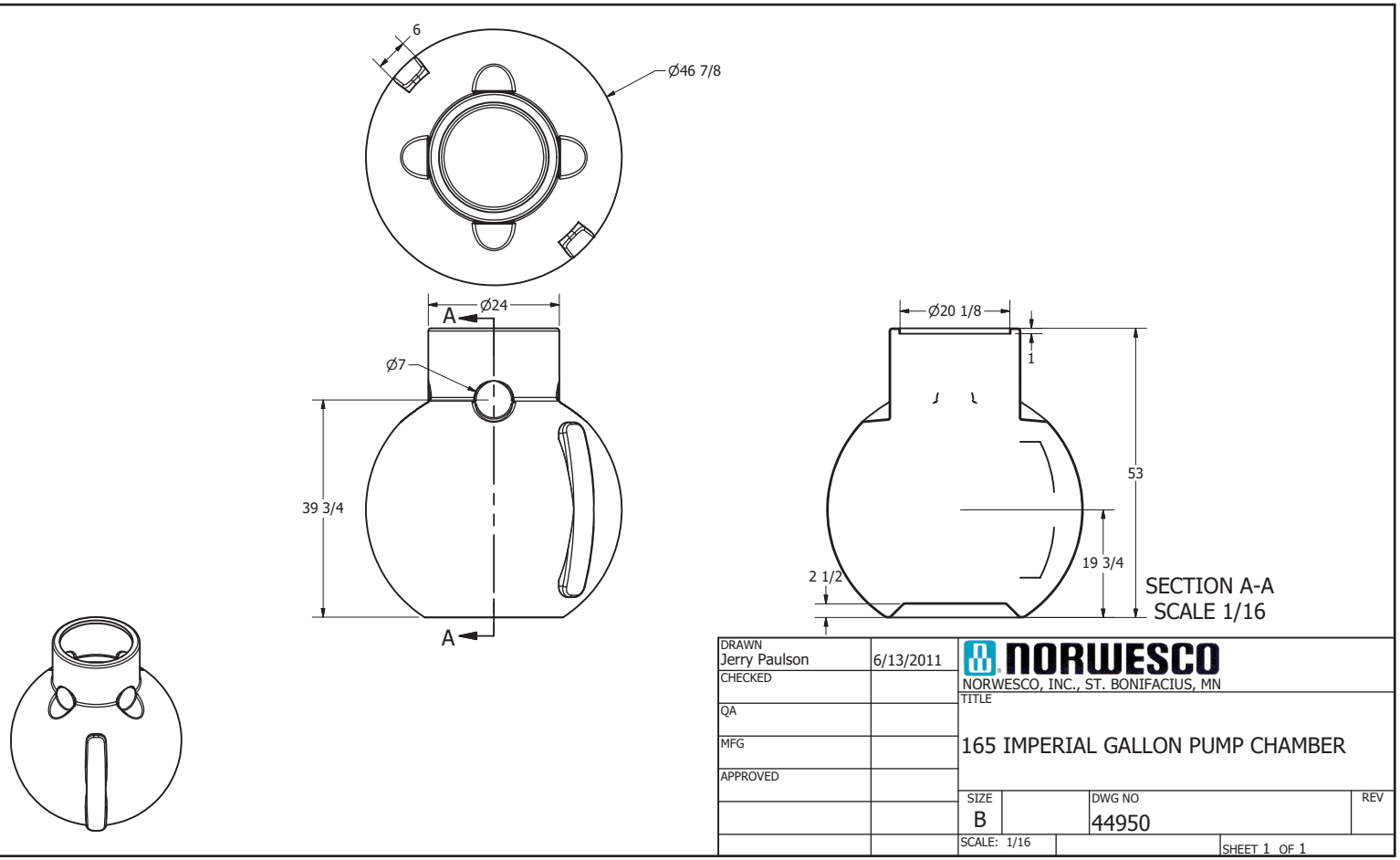


This document contains proprietary information. It is intended solely for use of potential clients involved or to be involved in a transaction with BARR Plastics Inc.

© 2019 BARR PLASTICS INC