SPECIFICATIONS

of work to be done and materials to be used in carrying out the works shown on the accompanying drawings

Chris & Bridgette Sies
(owner's name)

Lot 2, DP 306634
42 Bass Street, Christchurch
(project address)

Job number: 122654

Date: 5 February 2013

CCC Approved Consent Document - ABA10122477 - 12/03/2013 - Page 1 of 39

CONSTRUCTION SCHEDULE

Construction Schedule to be read in conjunction with the "Factory Order". The Factory order is to take precedence over construction schedule. Any Alterations to the Construction Schedule / Consented documentation shall be forwarded to the local Council for approval.

SINGLE STOREY

For the following site/project information refer to the lower section of the title block on the plans:
- Snow zone, Earthquake zone, Corrosion zone, Roof type, Wall types & Wind Zone (Refer to bracing calculation sheet “building location” section for wind zone analysis).

These drawings to be read in conjunction with any supplementary engineer’s documentation (i.e. Truss design, floor framing layout)
All construction to comply with NZS 3604, NZBC & local council policy.
All timber treatment to comply with NZS 3602

FOUNDATION:
Floor Slab: Ribraft (Refer to Engineers drawings)
Foundations: Ribraft (Refer to Engineers drawings)
Sub floor: Ribraft (Refer to Engineers drawings)
Where the DPM is likely to be damaged from the granular fill then protection shall be provided by no more than 25mm sand blinding in accordance with NZS 3604 clause 7.5.6.2.
Min. external cover to reinforcement
(a) Against ground 75mm
(b) Against formwork 50mm
(c) Top cover to United Steel SE73DE, 30 min
Plaster finished foundation face

ALL FRAMING (unless stated otherwise on the drawings)
SG8 Pinus Radiata
Exterior walls: H1.2, Bottom plate - 90x45 & Double top plate - 90x45 + 140x35
Interior walls: H1.2, Bottom plate & Top Plate - 90x45, refer to ceilings for double top plate requirements
Bottom plate fixings: Lumberlok Bottom Plate Fixing Anchors as per manufacturer’s specifications @ 900mm crs on all external walls and within 150mm of each end of the plate. 75mmx4mmØ shot fired fasteners @ 600mm crs and within 150mm of each end of the bottom plate to interior load bearing walls.
DPC between bottom plate & floor slab (Refer to MiTek specification attached for specific bottom plate fixing details required for bracing & lintels).

WALL FRAMING:
Ground Floor
Exterior & Interior Loadbearing wall: 90x45mm studs @ 600mm crs
Dwangs Ext: 90x45 @ 1200crs (Ecoply Barrier)
Non loadbearing: 90x45mm studs @ 600mm crs
Dwangs Int: 90x45mm @ 800mm crs
Lintels: Lintels are shown on the Consent Plans. (All Lintels SG8 unless stated otherwise).

Building Wrap: Ecoply Barrier building wrap with Aluband flexible flashing tape
Air Barrier to unlined wall and gables: Ecoply Barrier building wrap

INSULATION, ENERGY EFFICIENCY:
Exterior Walls: Pink Batts - Refer to H1 Schedule, Energy Efficiency Calculations
Ceilings: Pink Batts - Refer to H1 Schedule, Energy Efficiency Calculations
Glazing: Double glazing to all windows, excluding garage
Air Seals: PEF Rod & Low expansion foam.
Lighting: All lighting recessed into ceilings to be closed and abutted type.

TRUSSED ROOF AREA: (An as built truss design will be provided at time of manufacturing)
Metal Tile - Battens: 50x40 SG6 H1.2 @ 370crs (Fixings in specification)
Trusses: @ 900crs, refer to truss design (H1.2 unless otherwise stated on Timber Treatment Plan)
Fascia & Gutter system: Refer to manufacturers specification attached, provide Snow straps
Down pipes: 75x55 Rectangle Colorsteel
Soffits: 4.5mm Hardiflex to Ribbon boards, sprockets & packers ex50

CCC Approved Consent Document - ABA10122477 - 12/03/2013 - Page 2 of 39

CEILINGS:
Interior Walls: Walls running parallel to battens to be double top plate - 90x45 + 140x35
Battens: Rondo" metal ceiling battens @ 600 crs (#6 Gib Grabber Scavenger Head self tapping screws, no fixing clip).
Finish garage: 13mm Gib board, Level 3 plaster finish
Flat Ceilings: 13mm Gib board throughout unless specified different on the plans & Level 4 finish to all rooms in flat ceiling areas

FLOOR FINISHES
Note: Floor surfaces of any space containing "*sanitary fixtures or sanitary appliances must be impervious and easily cleaned*." (Seal floor when Laundry is in garage)
Carpet: Non-slip and have a slip (wet) coefficient value of 0.55-0.70 for tufted of loop pile. (NZBC D1/AS1 Table 2) Floors to be carpet unless stated otherwise on plan, not including the garage.
Floor Tiles: Non-slip and have a slip (wet) coefficient value of 0.35-0.65 for grit finished ceramic tiles. (NZBC D1/AS1 Table 2)
Vinyl: Non-slip and have a slip (wet) coefficient value of 0.25-0.5 for smooth or Imprinted. (NZBC D1/AS1 Table 2)

Entry through external doors to have a max step of 190mm (Riser height and tread depth for all steps in one flight, shall be uniform within the tolerance of ± 5 mm measured at the centreline on straight flights and at the pitch line on curved and spiral flights.)
With outward opening doors, a landing shall be provide with a clear space of at least 400mm from the leading of the door and the full width of the landing.
Build up this area with AP40 and compact, to have a cross fall of no less than 1:100 and fall away from building. (By Others, Coefficient of friction, wet - 0.6 - 0.9)

WET AREAS
Aqualine Gib with Enamel paint finish, refer to details attached.
Waterproofing: Flooring to all first floor wet areas, bath plinths to be sealed with "Wetseal" fibreglass waterproofing membrane BRANZ appraisal 372 (2000)

KITCHEN JOINERY
Bench top – Laminated Plastic (Formica or WilsonArt), Cupboards – Melteca/Melamine
Bathroom Joinery
Top – Vitreous China, Cupboards – Polyurethane coated
Minimum Requirements for sinks:
Kitchen Sink: 300mm dia min X 125mm min depth. (As per NZBC G3/AS1)
Laundry tub: No less than 35 litres. (As per NZBC G2/AS1)

VENTILATION:
Mechanical ventilation to be discharged outside via the soffit to comply with NZBC G4/AS1. (Manrose 120Ø FAN 0940, 16m² max and Manrose SF 150)

Smoke Alarms (Hush type) To comply with NZBC F7/AS1. Smoke detectors to be fitted within 3.0m of sleeping areas and on Escape routes, as indicated on plan. (Proof of compliance will be required for final inspection and issue of Code Compliance Certificate).

WATER PIPES
Water pipe from hot water heater to be 15mmØ with no more than 2 litres total volume (as per NZBC G12/AS1 Table 4 and NZS 4305 cl. 3.2.1 and Table 5) and closed cell foam polymer insulation which is preformed to the shape of the pipe and not less than 13 mm thick, is acceptable material for preventing pipes less than or equal to 40 mm diameter from freezing (as per NZBC G12/AS1)
Acceptable pipe lengths as per NZS 4305 table 5
10 mmØ = 78ml/m (25m max, total)
15mmØ = 176ml/m (12m max, total)
20mmØ = 214ml/m (7m max, total)
NZBC 7.5 Watertightness
7.5.1 The water supply system shall be tested to ensure watertightness.
An acceptable testing method is to:
a) Subject the hot and cold system to a pressure of 1500 kPa for a period of not less than 15 minutes, and
b) Inspect the system to ensure that there are no leaks.

RAINFALL CATCHMENT AREA CALCULATION
Rainfall Intensity: as per Appendix A, E1/AS1
Gutter Type & Downpipe Size: As noted above in "Truss Roof area" note in Construction Schedule.

CCC Approved Consent Document - ABA10122477 - 12/03/2013 - Page 3 of 39

Cross Sectional Area: Refer to manufacturers specification attached
Roof Pitch: As noted in the project information on the plan.
Maximum Catchment Area: 0º-25º =60m², as per NZBC E1/AS1 Table 5

CCC Approved Consent Document - ABA10122477 - 12/03/2013 - Page 4 of 39

PRELIMINARIES AND GENERAL

THE PROJECT
The works are as described in this specification and as shown on the drawings.

SITE
The site of the works, the site address and the legal description are shown on the drawings. Confine access and work to the area of site indicated on the drawings.

BUILDING CONSENT COMPLIANCE
It is an offence under the Building Act 2004 to carry out any work not in accordance with the building consent. Refer the resolution of matters concerning compliance to the main contractor for direction. Where building consent approval is affected refer any change to the territorial authority.

STATUTORY OBLIGATIONS
Comply with all statutory obligations and regulations of regulatory bodies controlling the execution of the works.

BUILDING CONSENT
Obtain the original or copies of the building consent form and documents from the main contractor and keep on site. Liaise with the territorial authority for all notices to be given and all inspections required during construction to ensure compliance. Return the consent form and documents to the owner on completion.

PRODUCER STATEMENTS
When producer statements verifying construction are required, provide copies to both the territorial authority and the owner. Producer statements to be in the form required by the Territorial Authority to comply with the Building Act.

SET-OUT AND DATUM
Set out the works to conform with the drawings. Establish a permanent site datum to confirm the proposed building ground floor level and its relationship to all other existing and new building levels.

CCC Approved Consent Document - ABA10122477 - 12/03/2013 - Page 5 of 39

PREPARATION AND GROUNDWORK

Documents referred to in this section are:

NZBC	B1 Structure
	B2 Durability
	E2 External Moisture
NZS 3604	Timber framed buildings

OSH: Approved code of practice for safety in excavation and shafts for foundations

GRANULAR FILL
Approved screened crushed gravel or scoria, graded in size from 20 mm to 7 mm, clean. When tested with a standard sieve of 4.75 opening no material is to pass.

SURFACE PREPARATION
Comply with NZS 3604 section 3.5. Remove all turf, vegetation, trees, topsoil, stumps and rubbish from the area to be built on.

STOCKPILE TOPSOIL
Stockpile excavated topsoil on site where directed. Keep separate from other excavated materials. Spreading and levelling of the topsoil at completion of work is the owners responsibility. Clients will be encouraged to landscape and cover exposed soil on their site as soon as possible, refer to “Erosion & Sediment Control Plan” at the end of this specification.

GENERAL EXCAVATION
Trim ground to required profiles, batters, falls and levels. Remove loose material. Protect cut faces from collapse. Keep excavations free from water.

FOUNDATION EXCAVATION
Take foundation excavations to depths shown on plans. Keep trenches plumb and straight, bottoms level and solid, stepped as detailed and clean and free of water.

INADEQUATE BEARING
If supplied, Engineers Ground Bearing and Foundation report takes precedence over the following:

When bearing is inadequate, excavate further and backfill as per below.
Confirm any changes with the territorial authority.

Below slabs on grade:	Hardfill
Below footings:	10 MPa concrete
Service trenches:	Hardfill

If excavation exceeds the required depths, backfill and compact to the correct level with material as listed.

GRANULAR BASE FOR SLABS
To conform with NZS 3604 (Details noted on the plans). Consolidate with a vibrating roller ready to receive a dampproof membrane.

GENERAL BACKFILLING
Obtain written confirmation from the owner & the main contractor before using any excavated material (An Engineer will need to be involved and Council Approval will be required. Compact approved backfilling in 150 mm layers with the last 200 mm in clean topsoil, lightly compacted and neatly finished off to a Maximum depth of 600mm.

CCC Approved Consent Document - ABA10122477 - 12/03/2013 - Page 6 of 39

CONCRETE

Documents referred to in this section are:

NZS 3101	Concrete structures standard, Part 1 The design of concrete structures.
NZS 3104	Specification for concrete production
NZS 3109	Concrete construction
NZS 3114	Specification for concrete surface finishes
NZS 3604	Timber framed buildings
AS/NZS 4671	Steel reinforcing materials

FALSEWORK AND FORMWORK
Use falsework and formwork of sufficient strength to retain and support the wet concrete to the required profiles and tolerances. Select formwork finish to produce the specified finished quality. Ensure timber or plywood used for formwork is non-staining to the set concrete.
Securely fix and brace formwork sufficiently to support loads and with joints and linings tight enough to prevent water loss.

DAMPPROOF MEMBRANE
0.25 mm minimum polyethylene to NZS 3604 clause 7.5.4 Damp-proof membrane.
Apply polythene membrane to prepared base course with 150 mm laps between sheets. Tape seal laps and penetrations with 50 mm wide pressure sensitive plastic tape.

REINFORCEMENT
Bars to AS/NZS 4671. Grade Ductility Class E, all deformed other than for ties, stirrups and spirals, unless shown otherwise on the drawings. Welded reinforcing mesh to AS/NZS 4671.

Cut and bend bars using proper bending tools to avoid notching and to the requirements of NZS 3109 clause 3.3 Hooks and bends. Do not rebend bars without written approval.

Secure reinforcement adequately with tying wire and place, support and secure against displacement when concreting. Bend tying wire back well clear of the formwork. Spacing as dimensioned, or if not shown, to the clear distance minimums laid down in NZS 3109 clause 3.6 Spacing of reinforcement.

Minimum cover to all reinforcing bars, stirrups, ties and spirals, as shown on the drawings. Where cover is not shown on drawings provide minimum cover to NZS 3101 table 5.5 minimum required cover. Fix chairs for top reinforcement in slabs at 1.0 metre centres or to ensure adequate support. Cover tolerances to NZS 3109 clause 3.9 Tolerances for reinforcement.

Length of laps where not dimensioned on the drawings in accordance with the Manufacturers Specification. Increase laps of plain round steel by 100%. Tie all lapping bars to each other.

REINFORCEMENT LAPS

Bar Diameter	Lap
10 mm	400 mm
12 mm	500 mm
16 mm	650 mm

TYING WIRE - Mild drawn steel wire not less than 1.2 mm diameter.

SPACERS AND CHAIRS - Precast concrete or purpose made moulded PVC to approval. Use concrete spacer blocks only where the concrete surface is not exposed in the finished work.

PRE-PLACEMENT INSPECTION
Do not place concrete until all excavations, boxing and reinforcing have been inspected and passed by the territorial authority inspector.

NORMAL CONCRETE
Normal concrete 20 MPa grade, maximum aggregate size 19 mm ready-mixed to NZS 3104. Provide delivery dockets listing mix and despatch details.

PRESCRIBED MIX CONCRETE
Prescribed mix concrete 17.5 MPa grade minimum strength, using either separate batching of sand and builder's mix or coarse aggregate to NZS 3104 table 3.1 Grading recommendations for combined and uncombined coarse aggregates.

Formwork linings and surface finishes as nominated for both fair face and concealed or exposed surfaces. Unless detailed, obtain written confirmation of the type and pattern of all joints.

Set up and supervise pump operation, placing and compaction of the mix to NZS 3109 clause 7.4 Handling and placing and 7.6 Compaction Advise the ready-mix supplier of the type of pump and the slump required, in addition to the concrete grade, strength and quantity.
Use power operated vibrators on foundations, vertical constructions and beams.

Concrete slab-on-ground floors in timber buildings constructed to NZS 3604 clause 7.5 lay to true and straight surfaces, screeded, floated and steel (manual or power) trowelled finish. Tolerance on flatness: maximum 3 mm gradual deviation over a 3 metre straight-edge, to NZS 3109 clause 104 Surface tolerances.

CASTING IN
Build in all grounds, bolts and fixings for wall plates and bracing elements, holding down bolts, pipes, sleeves and fixings as required by all trades and as shown on the drawings, prior to pouring the concrete.

Do not use grounds exceeding 100 mm in length. Location and form of conduits to be approved in writing by the owner. Minimum cover 40 mm. Do not encase aluminium items in concrete. Do not paint steel embedded items more than 25 mm into the concrete encasement. Cut back form ties to specified cover and fill the cavities with mortar.

Form all pockets, chases and flashing grooves as required by all trades and as shown on the drawings.

Wrap all pipes embedded in concrete with tape to break the bond and to allow for expansion. Do not embed pipes for conveying liquids exceeding a temperature of 50°C in concrete.

CCC Approved Consent Document - ABA10122477 - 12/03/2013 - Page 8 of 39

CARPENTRY

Documents referred to in this section are:

AS/NZS 1748	Mechanically stress-graded timber
AS/NZS 1859	Reconstituted wood based panels, 1859.1: Particleboard
AS/NZS 2269	Plywood - Structural
NZS 3602	Timber and wood-based products for use in building
NZS 3603	Timber structures standard
NZS 3604	Timber framed buildings
AS/NZS 1328 1&2	Glued laminated structural timber
NZS 3631	New Zealand national timber grading rules

Refer to Production Specification for Durability requirements.

TIMBER FRAMING, FOR INTERIOR USE
Timber treatment as per “All Framing” section, machine stress graded timber to AS/NZS 1748, with moisture content at supply of 18% or less.

TIMBER FRAMING, FOR EXTERIOR USE
Timber treatment as per “All Framing” section, machine stress graded timber to NZS 3631 and to NZS 3602, table 1 with moisture content to NZS 3602 table 4

CEILING BATTENS
GIB® Rondo™ Galvanised Steel Ceiling Battens

TIMBER TRUSSES
Moisture content at supply: 18%.

DAMPPROOF COURSE
2-ply/3-ply Kraft felt strip saturated and coated with bitumen.

NAILS
Steel, stainless steel and galvanised steel of pattern to suit the location.

Type to NZS 3604 section 4 Durability, and of the size and number for each particular types of joint as laid down in the nailing schedules of NZS 3604 sections, 6 Foundations, 7 Floors, 8 Walls, 9 Posts, 10 Roof framing and 15 1.5 kPa and 2 kPa snow loading. Except that when hand driving nails into Timber the nail lengths and diameters should be generally as for power driven nails.

BOLTS AND SCREWS
Steel, stainless steel and galvanised steel of pattern to suit the location.

NAIL PLATES
As per manufacturer’s design for the particular locations as shown on the drawings.

CONNECTORS
Galvanised steel connectors and structural brackets to the connector manufacturer's design for particular locations shown on drawings.

MOISTURE CONTENT
Maximum allowable equilibrium moisture content (EMC) for framing supporting interior linings 18%

FRAMING WALLS
Frame to required loading and bracing complete with lintels, sills and nogs, all fabricated and fastened to NZS 3604 sections 8 & 15.

FRAMING ROOFS
Frame to required loading and bracing complete with valley boards, ridge boards and purlins/battens. Design and fit roof trusses complete with anchorage. All fabricated and fastened to NZS 3604 sections, 9 Posts, 10 Roof framing and 15 1.5 kPa and 2 kPa snow loading.

INSTALLING CEILING BATTENS
Fabricate and fasten to as per manufacturers recommendation.

CCC Approved Consent Document - ABA10122477 - 12/03/2013 - Page 9 of 39

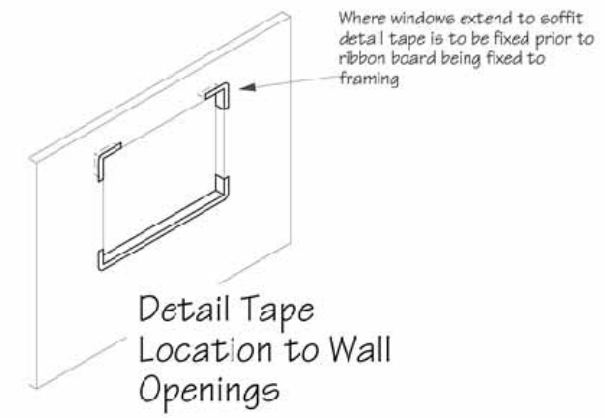

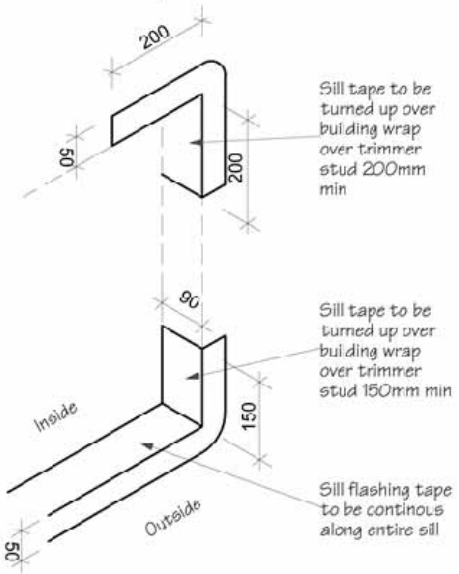

Sill Tape Flashing Detail

Figure 72B: General window and door opening with drainage cavity
Paragraphs 9.1.5, 9.1.9.3, 9.1.10.2, Figures 73C, 76, 85, 86, 91, 99, 116 and 128

NOTE:
(1) Detailed *cladding* omitted for clarity, refer to specific *claddings*.
(2) Head to be treated similarly with continuous *wall underlay* and *flexible tape* at corners.
(3) Refer individual cladding details for jamb flashings.

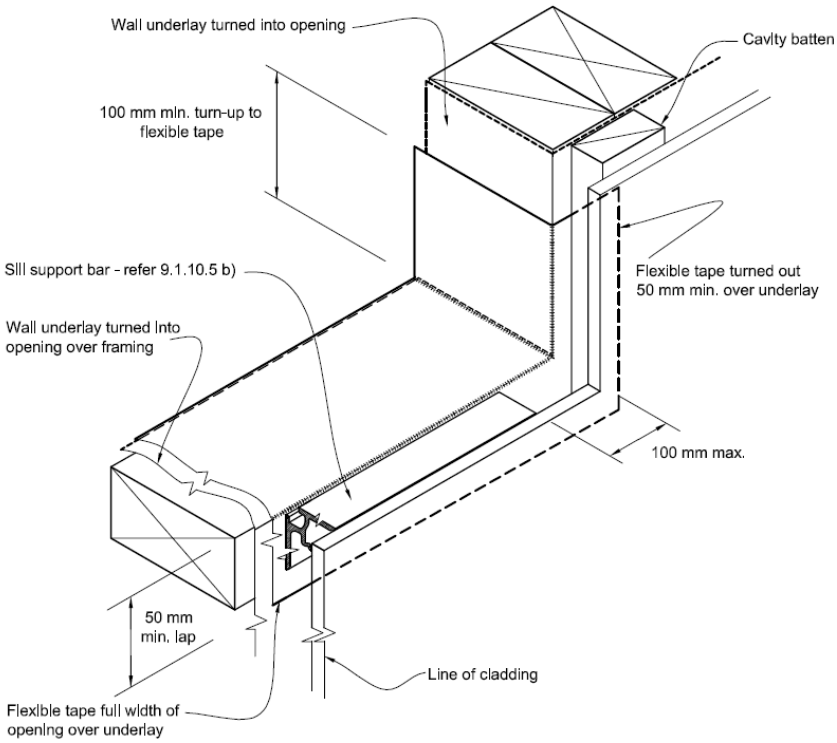

BRICK VENEER CLADDING

Documents referred to in this section are:

NZBC B1/AS1	Structure general
AS/NZS 2699	Built in components for masonry construction
NZS 3103	Sands for mortars and plasters
NZS 3112	Specification for pigments for Portland cement and Portland cement products
NZBC E2/AS1	External Moisture
NZS 3604	Timber-framed Buildings
NZS 4210	Masonry construction: Materials and workmanship
NZS 4236	Masonry veneer wall cladding

BRICKS
To AS/NZS 4455. Size: 230 mm x 76 mm x 70 mm
Lay bricks to NZS 4210. Ensure bricks are dry when laid. Use bricks equally off all pallets as work proceeds. Distribute facing bricks of varying colour randomly throughout so no patches or striping appears.

Stretcher bond, single width unless detailed or stated otherwise.

Rake out joints as work proceeds. Joints tooled concave after initial mortar stiffening.

Cavity 40mm min. – 75mm max. Pipes and services not to be placed within the cavity.

Weep holes to E2/AS1 clause 9.2.6 Cavities. (Approximately 800 crs & to be a minimum of 1000mm² per meter)

Shelf/Veneer Lintels
To E2/AS1 table 18E, and as detailed.

DAMPPROOF MEMBRANE
Apply bituminous brush-on liquid applied membrane as a primer and 2 coats, to drain water effectively out of the cavity.

VENEER TIES
To NZS 4210
Wall ties shall be placed within 5º of a right angle to the plane of the masonry, fix to face of studs without otherwise piercing or damaging the building wrap. Ties placed and spaced to E2/AS1 table 18A. Corrosion protection for masonry wall ties as per E2/AS1 table 18C.

Table 18C: Corrosion protection to masonry wall ties
Paragraph 9.2.7

	316, 316L, or 304 stainless steel	470 g/m^2 galvanising on mild steel
Zone B	Yes	Yes
Zone C	Yes	Yes
Zones D and E	Yes	-

CCC Approved Consent Document - ABA10122477 - 12/03/2013 - Page 11 of 39

Table 18B: Placement of wall ties
Paragraph 9.2.5 and 9.2.7

Location	Placement of masonry ties
Unsupported panel sides and edges of openings	Within 300 mm of panel side or edge.
Top of veneer panels and top of panels under openings	Within 300 mm or two courses (whichever is the smaller) of top of veneer
Bottom of veneer panel in masonry rebate sealed with liquid applied *damp-proof course* Bottom of veneer panel supported on steel angle lintel	Within 300 mm or two courses (whichever is the smaller) from bottom of veneer
Bottom of veneer panel in masonry rebate with *membrane damp-proof course*	In each of the first two courses

NOTES:

Ties are to be screw fixed (ie. non-impact method) using screws outlined in Table 24.

Table 18A: Specification of maximum tie spacings for type B (4) veneer ties
Paragraph 9.2.7

Seismic zone Refer NZS 3604	Masonry veneer Less than 180 kg/m²			Masonry veneer 180 – 220 kg/m²			Masonry veneer more than 220 kg/m²
	Tie type (4)(5)	Maximum spacings (1) Horizontal	Vertical	Tie type (4)(5)	Maximum spacings (1) Horizontal	Vertical	
1	EL	600	400	EM	600	400	SED (2)
2 (6)	EM	600	400	EH (3)	600	400	SED (2)
3	EH (3)	600	400	EH (3)	600	400	SED (2)
4	SED (2)	SED (2)	SED (2)				

NOTES

(1) Maximum masonry tie spacings of 600 mm horizontally and 400 mm vertically

(2) Spacing of ties to be determined by specific engineering design

(3) EM may be used if the horizontal spacings do not exceed 400 mm and the vertical spacings do not exceed 300 mm

(4) Type B and Prefix E indicate masonry ties manufactured to AS/NZS 2699.1

(5) L (Light), M (Medium), H (High) indicate strength capability of ties in AS/NZS 2699.1

(6) Use seismic zone 2 (minimum) for Christchurch region comprising Christchurch City, Waimakariri District and Selwyn District.

SAND FOR MORTAR
Sand to comply with NZS 3103. Chloride levels to not exceed 0.04% by dry weight of sand.

Composed of Portland cement, sand and water with an admixture to the provisions of NZS 4210 clause 2.2. Obtain written approval of admixture to be used. Also obtain written approval if intending to use cement mortar as a damp proof course and where, or if intending to use hydrated lime in the mortar.

To maximum practical density. Mortar fully laid, firmly placed, correctly cured and not re-tempered. Discard any mortar not used within 1½ hours of mixing.
Joint thickness: 10 mm ±1 mm.

Add mineral oxide pigment conforming to NZS 3117 and to requirements of NZS 4210 clause 2.2.2.2(f).

WATER
Clean, fresh and free from excess alkali, salt, silt and organic materials. Water from a local authority water supply is acceptable.

STORAGE
Store bricks and other materials clear of the ground, under cover and well ventilated until placed in the work.

KEEP CAVITY AND TIES CLEAR
Keep cavity and ties clear of mortar droppings and clean the brickwork face of any marking as the work proceeds. Repair damage to building paper immediately it occurs.

CCC Approved Consent Document - ABA10122477 - 12/03/2013 - Page 13 of 39

METAL PROFILED ROOFING

MANUFACTURER'S DOCUMENTS
Manufacturer's and supplier's documents relating to work in this section are:
NZ Metal Roof and Wall Cladding Code of Practice

QUALIFICATIONS
Roofers to be Approved Installers.

FIXINGS, WIND
Design and use the fixings appropriate for the wind zone and topographical classification of this site and building height. Allow for specific loadings at corners and the periphery of the roof, where localised pressure factors apply.

PERFORMANCE
Install roofing material and associated flashings and accessories to form a weather tight and durable system.

SET-OUT
Set out the planned layout before fixing commences, to ensure true lines and the correct relationship to module, grid and roof features.

MARKING AND CUTTING PROFILED METAL ROOFING
Use ink pen, chalk line or coloured pencil for marking roof sheets prior to cutting. Do not use black lead pencil for marking aluminium/zinc-based products. Cut by shear only, using nibblers or hand snips. Remove all cutting and drilling debris from the roof as soon as possible, ensuring that it does not contaminate gutters or lower surfaces.

INSTALLING PROFILED METAL ROOFING
Install and fix 0.40 gauge roofing in accordance with NZ Steel's Installers Guide and to the Manufacturer Product Guide. Use only screws as required by the roofing manufacturer. Colour matched fixings and accessories to be painted before installation.
Install in continuous lengths without end laps. Where end laps are necessary, seal both ends of the lap with lap sealing tape or sealant.
Confine foot traffic over the roof to within 300 mm of purlins or with foot placement in the pan of the profile. Where this is not possible, walk across two adjacent ribs.

FLASHINGS GENERALLY
Formable grade 0.55 BMT for galvanised, aluminium/zinc and pre-coated steel, and 0.90 for aluminium to the same standards as the profiled sheets, notched where across profile or provided with a soft edge. Where flashings are required but are not detailed, design to the Manufacturers standard flashing details.

Fasten ridges and all roof flashings at both edges through to the primary structure at centres required by the roofing manufacturer, allowing for localised wind forces. Close flashings neatly at the ends to provide a weatherproof and vermin proof appearance.

Flash all penetrations through the roof. Fit pipe flashings with a proprietary collar flashing, with other penetrations flashed as detailed and to provide a weathertight installation. Ensure that flashings are set to avoid any ponding of water.

NZBC E2/AS1 clause 4.5.2 Metal flashing joints
Where metal flashings require to be joined, the method shall be as shown in Figure 6. Joins of metal flashings shall have the following features:
a) Rivets used for joining and sealing laps shall be spaced at a maximum of 50 mm centres, and be:
i) compatible with the flashing material as per NZBC E2 Table 21 and Table 22, and ii) sealed against moisture, or iii) of a sealing type or blind rivet,
b) Expansion joints shall be provided for joined flashings with a combined length exceeding:
i) 12 metres for light coloured steel and stainless steel. 8 metres for dark coloured steel, ii) 8 metres for copper, & iii) 8 metres for aluminium.
c) Where both ends of a flashing are constrained, allowance shall be made for expansion,
d) Where necessary, expansion joints shall be formed as shown in Figure 6, with: i) minimum 200 mm laps, and ii) sliding clips at both sides of the lap.

CCC Approved Consent Document - ABA10122477 - 12/03/2013 - Page 14 of 39

UNDERLAY
Type: Heavy weight self supporting roofing underlay. (Thermakraft 215)

Lay underlay horizontally or vertically with a 150 mm side lap, over sailing the spouting and/or gutters by 10-20 mm.

FASTENERS GENERALLY
Ensure durability of all fasteners is at least Class 4 and not less than the roofing material being fixed. Where applicable all fasteners factory colour matched prior to installation

FIXING SCREWS
Screws appropriate to the roofing material and the supporting member, as recommended by the Manufacturer.

RIVETS
Sealed aluminium, minimum diameter 4 mm.

SEALANT
Neutral curing silicone or polymer sealant as required by the Manufacturer and used as directed.

Select and use sealants only as recommended for the materials being used. Apply sealant in two narrow beads transversely across flashing intersections, close to the two edges. Avoid exposing sealant on outside surfaces.

CLOSURE STRIPS
Compressible, profiled, closed cell foam strips to fit the sheet profile.

LAP SEALING TAPE
Closed cell, 3 mm x 16 mm self adhesive Trimseal tape.

END LAPS
Install in continuous lengths without end laps. Where end laps are necessary, seal both ends of the lap with lap sealing tape or sealant.

AVOID DAMAGE
Take care to avoid damaging pre-finished roofing both during and after fixing. Wear only soft-soled shoes on the finished surface. Allow foot traffic over the roof only within 300 mm of purlins or with foot placement in the pan of the profile. Where this is not possible, walk across two adjacent ribs.

ENSURE COMPLETE
Ensure the work is complete with all flashings, undercloaks, valleys, ridges and hips properly installed so the finished roof is completely weathertight.

Remove metal filings from roofing surfaces at least daily.

Replace damaged or marked elements. Do not attempt to repair coatings by applying colour match paint to pre-finished surfaces.

Remove trade rubbish and unused materials from the roof and surrounds daily during the work. Sweep down at the end of each day, and clean out spouting's, gutters and rainwater pipes on completion of the roof. Remove debris, unused materials and elements from the site.

Leave this work complete with all necessary flashings, undercloaks, valleys, ridges and hips all properly installed as the work proceeds so the finished roof is completely weathertight.

CCC Approved Consent Document - ABA10122477 - 12/03/2013 - Page 15 of 39

ALUMINIUM WINDOWS AND DOORS

DOCUMENTS
Documents referred to in this section are:

NZS 3604	Timber framed buildings
NZS4211	Specification for Performance of Windows
AS 3715	Metal finishing - Thermoset powder coatings for architectural applications

WINDOW AND DOOR SECTIONS
Form all aluminium members from extruded sections. Folded sections are restricted to flashings and concealed members only.

FLASHINGS GENERALLY
Material, grade and colour of head flashings to match the window frames. Ensure that materials used for head, jamb and sill flashings are compatible with the window frame materials and fixings and cladding materials.

Install flashings to heads, jambs and sills of frames as supplied and required by the window manufacturer and as detailed on the drawings. Finish head flashings to match window finish.

Place all flashings so that the head flashing weathers the jamb flashings, which in turn weathers over the upstand of the sill flashing. Ensure that sill flashings drain to the outside air.

Except where window/door frames are recessed, ensure that head flashings over-sail jamb facings by 20 mm at each end.

FIXINGS
Ensure all fixings and bracketing are compatible with aluminium. Do not use electroplated zinc fasteners or brass fastenings.

CONFIRM PREPARATION OF WALL OPENINGS
Confirm that wall openings have been prepared ready for the installation of all window and door frames. Do not proceed with the window and door installation until required preparatory work has been completed.

Required preparatory work includes the following:
-wall cladding building wrap to openings finished and dressed off ready for the installation of window and door frames
-claddings neatly finished off to all sides of openings
-interior linings neatly trimmed ready for installation of jamb liners and completion of air seals to all sides of openings
-installation of flashings (those which are required to be installed prior to frames, including Flexible flashing tape).

FIX FRAMES
Fix frames rigidly in place without distortion, to the window manufacturer's and WANZ Aluminium window handbook requirements, plumb, true to line and face, weathertight and with all openings operating freely.

COMPLETE AIR SEAL
Form an air-tight seal by means of proprietary expanding foam, compressible foam strips, or sealants used with backing rods, applied deep within the reveal to completely fill the gap between joinery and structural framing. Ensure that in combination with the internal linings a complete air seal is created.

WINDOWS AND DOORS TYPE

Manufacturer:	First Aluminium (ChCh)
Type/model:	First Aluminium Extrusion

WINDOW AND DOOR JAMB LINERS, TIMBER

Timber species:	Pine
Grade/treatment:	Finger jointed H3
Thickness:	ex40mm
Finish:	Paint grade

ORGANIC POWDER COATING FINISH

Minimum thickness:	40 microns

CCC Approved Consent Document - ABA10122477 - 12/03/2013 - Page 16 of 39

GLAZING

Documents referred to in this section are:

NZBC B1/AS1	Structure, 7.0 Glazing
NZBC F2/AS1	Hazardous building materials, 1.0 Glazing
NZBC F4/AS1	Safety from falling, 1.0 Barriers in buildings
AS/NZS 2208	Safety glazing materials in building
NZS 3604	Timber framed buildings
NZS 4223	Glazing in buildings
	Part 1: The selection and installation of glass in buildings
	Part 3: Human impact safety requirements
	Part 4: Dead, wind and snow loading
NZS 4211	Performance of windows
AS/NZS 4666	Insulating glass units
AS/NZS 4667	Quality requirements for cut-to-size and processed glass

GLASS
Processed glass to AS/NZS 4667, thickness to NZS 4223 parts 1, 3 and 4 unless otherwise specified:
-Clear float glass: Clear annealed transparent float glass
-Patterned glass: Translucent, annealed, rolled glass with a decorative pattern on one surface.
-Laminated glass: Grade A safety glazing material to AS/NZS 2208 with PVB or CIP resin interlayer.
-Toughened glass: Grade A safety glazing material to AS/NZS 2208.

SAFETY GLASS
All windows noted with “SG” on the elevations require Grade A safety glass. (All glazing in bathrooms <2m requires Grade A safety glass)

MIRROR GLASS
Float mirror glass to NZS 4223, part 1, clause 101.2.2.2: Silvering quality (selection S), with silver and copper plating and 2 coats of protective paint.

GLASS SCREENS
Proprietary shower/bath screens, formed to shape before toughening, complete with matching hardware.

GLAZING TAPE AND GASKETS
Single/double sided pressure sensitive self-adhesive low/medium/high density foam tapes/butyl tapes selected to suit the glazing detail to window manufacturers’ requirements.

SETTING BLOCKS
Santoprene/Neoprene, 80-90 Shore A hardness, set at quarter points or to detail, to support the weight of glass panes.

MIRROR ADHESIVE
Adhesive mirror-mastic and double-sided adhesive tape.

INSTALL GLASS SCREENS
Install shower and bath screens and doors to manufacturer’s requirements. Fix wall channel with silicone sealant.

CCC Approved Consent Document - ABA10122477 - 12/03/2013 - Page 17 of 39

Table 3.7 – Glazing protecting a difference in level in any building

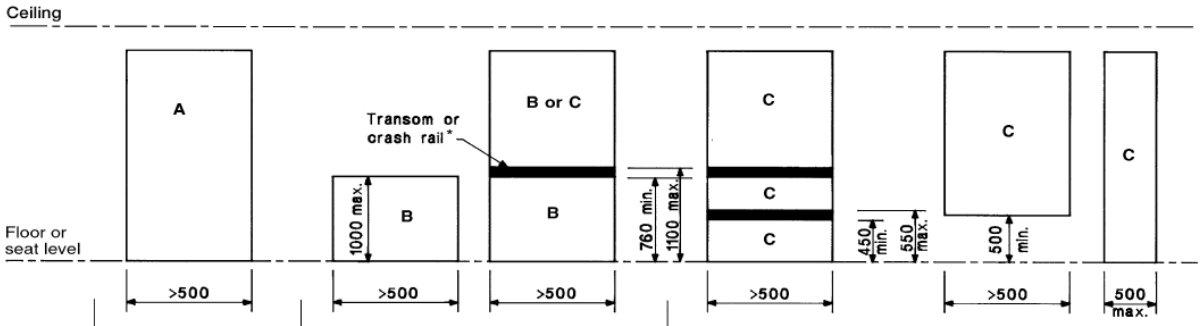

	TYPE A	TYPE B	TYPE C
Household units	Safety glazing material to table 3.1 or annealed glass to column 1 of table 3.2	Safety glazing material to table 3.1 or annealed glass to column 2 of table 3.2 with 5 mm minimum thickness†	Select glass thickness by reference to wind design charts in Part 4. Table 3.3 of this Part is the minimum requirement.‡
All other buildings§	Safety glazing material to table 3.1 or annealed glass to column 2 of table 3.2	Safety glazing material to table 3.1 or annealed glass to column 3 of table 3.2 with 5 mm minimum thickness	Select glass thickness by reference to wind design charts in Part 4. Table 3.3 of this Part is the minimum requirement.‡

* Crash rails should be designed to discourage people from sitting on them.
† If a transom is fitted, the upper panel can be type C.
‡ Refer also to section 307.
§ For high-risk activity areas, refer to 303.10. For stairwells, refer to section 313.

NOTE –
(1) Thickness of glazing materials shall also be checked for wind loading.
(2) Glazing materials shall be contained in accordance with 303.2.
(3) For opening windows – refer to Clause F4/AS1 of the NZBC for window opening restrictions not related to this Part.

CCC Approved Consent Document - ABA10122477 - 12/03/2013 - Page 18 of 39

INSULATION

Documents referred to in this section are:

NZBC H1/AS1	Energy efficiency, 2.0 Building thermal envelope
NZS 4214	Methods of Determining the total thermal resistance of parts of buildings
NZS 4218	Energy efficiency – Small building envelope
NZS 4243	Energy efficiency – Large buildings

FIT THERMAL INSULATION

Lay, install, fit and fix insulation to NZBC H1/AS1: Energy efficiency, 2.0 Building thermal envelope. Install in housing to NZS 4218 and in large buildings to NZS 4243.

Friction fit insulation in place to completely fill the whole of the cavities with no gaps and with no folds. Slightly oversize length for friction fit and cut across pad and fill cavity. Cut smaller pieces for smaller spaces and around penetrations. Leave no gaps between, and maintain full thickness of the insulating segments over the whole of the installation. Do not cover vents. No clearance required to CA type lighting fixtures.

THERMAL INSULATION, WALLS

Location:	Exterior walls (excluding garage)
Brand:	Refer to H1 Schedule
R Value:	Refer to H1 Schedule, Energy Efficiency Calculations

THERMAL INSULATION, CEILING

Location:	Ceilings (excluding garage)
Brand:	Refer to H1 Schedule
R Value:	Refer to H1 Schedule, Energy Efficiency Calculations

CCC Approved Consent Document - ABA10122477 - 12/03/2013 - Page 19 of 39

GIB® PLASTERBOARD LININGS

Refer to GIB® EzyBrace™ Systems installation information attached to specification.

Documents referred to in this section are:
AS/NZS 2588 Gypsum linings in residential and light commercial construction - Application and finishing, Part 1: Gypsum plasterboard
BRANZ technical paper P21: A wall bracing test and evaluation procedure

MANUFACTURER'S DOCUMENTS
Manufacturer's and supplier's documents which refer to work in this section are:
General: GIB® Site Guide
Wet area: GIB Aqualine® Wet Area Systems
Bracing: GIB EzyBrace® Systems
Ceilings: GIB® Rondo® Metal Batten Systems

GIB® PLASTERBOARD
Gypsum plaster core encased in a face and backing paper formed for standard and water resistance use to AS 2588.

CEILING BATTENS
GIB® Rondo™ galvanised steel ceiling battens and perimeter channel and GIB® Direct Fix Clip. Install in accordance with GIB® Rondo™ Metal Ceiling Batten Systems.

SCREWS
GIB® Grabber™ drywall screws.

NAILS
GIB® Nails (gold passivated).

TAPE ON TRIMS AND EDGES
GIB® Goldline™ tape-on paper tape and galvanised steel trims and edges and/or GIB® UltraFlex high impact corner mould.

ADHESIVE
GIBFix® All Bond wallboard adhesive.

JOINTING COMPOUND
Bedding compound: GIB Tradeset®, GIB® Lite Blue and GIB ProMix® Taping compound
Finishing compound: GIB ProMix® GIB ProMix®, Lite, GIB® All Purpose and GIB Plus 4®

JOINTING TAPE
GIB® paper jointing tape.

CHECK SUBSTRATE
Do not commence work until the substrate is plumb, level and to the standard required by the sheet manufacturer's requirements. Moisture levels not to exceed 18% at the time of lining.

MOISTURE CONTENT
Maximum allowable moisture content in accordance with AS/NZS 2589.1 for:
Framing at lining: 18% for plasterboard linings

PROTECT
Protect all surfaces, cabinetwork, fittings, equipment and finishes already in place from the possibility of water staining and stopping damage.

LEVELS OF FINISH
Provide the scheduled plasterboard surfaces to the levels of finish specified in AS/NZS 2589

Before commencing work, agree in writing upon the expectation for the final quality of finish. The specified level of finish for each area should be appropriate for the type of decoration and the type and angle of the primary source of illumination specified in that area.

CCC Approved Consent Document - ABA10122477 - 12/03/2013 - Page 20 of 39

TILING

Documents referred to in this section are:

NZBC	D1/AS1 – Slip resistance
AS 2358	Adhesives - For fixing ceramic tiles
AS 3740	Waterproofing of wet areas within residential buildings
AS 3958	Ceramic tiles, 3958.1: Guide to the installation of ceramic tiles
BS 6431	Ceramic floor and wall tiles
BRANZ	Good practice guide: Tiling

QUALIFICATIONS
Carry out tiling work using competent tilers, experienced with the materials and techniques specified.

TEMPERATURE
Do not carry out tiling where the ambient temperature is below 5°C, or onto a substrate with a temperature higher than 40°C.

SUBSTRATE
Ensure that all services and accessories are in place and located to suit the tile layout, with the substrate required for tiling work. Commencement of the work means the substrate and environment are accepted by the tile layer as satisfactory.

CONCRETE FLOORS PREPARATION
Remove from the surfaces all contaminants such as paints, oils, release and curing compounds. Remove all projections, unevenness and loose material to leave a clean, dust and dirt-free surface. Remove all existing finishes down to the concrete & prepare surfaces and carry out the tiling work in accordance with AS 3958.1, as modified by BRANZ Good practice guide: Tiling.

LIQUID WATERPROOFING MEMBRANE (refer to Construction Schedule - “Wet Areas” for system used)

Install waterproofing membrane between the tile adhesive and the substrate. Reinforce all junctions of the waterproofing membrane as per the manufacturer’s recommendations. Install waterproof membranes as follows: -
To walls behind bath - Two tiles high

Unenclosed shower cubicle
To 2000mm above floor and 300mm above shower rose.
To at least 1500mm from shower rose.
To the floor within 1500mm of the shower rose.

FALLS
Where the shower floor has no upstand or where a wall, screen, door or curtain is omitted, the floor shall have a fall of no less than 1:50 towards the floor waste. The fall shall apply to the floor area within a radius of 1500 mm taken from a point vertically below the shower rose, or from any wall within that radius.

CEMENT BASED SCREED
Mix of 3:1 Portland cement, wash-mix sand, gauged with liquid polymer additive to the tile manufacturer's requirements.

Apply a proprietary cement slurry bond coat over the whole of the floor to the tile manufacturer's requirements. Mix and place a 40 mm thick mortar bed over the bond coat and firmly tamp, screed and compact to the required level. Form screeds with a deviation from plane of not more than 5 mm over 3 metres.

In waterproofed areas where the cement screed has been laid over the waterproofing membrane, prepare the screed surface by applying a further waterproof coating before laying tiles.

Form screeds in areas where water is used in significant amounts with a deviation from plane of not more than 5 mm over 3 metres. Unless otherwise specified form screeds at 1: 40 minimum.

TILE ADHESIVE
To BS 6431, parts 1 to 23 inclusive & AS 2358.

CCC Approved Consent Document - ABA10122477 - 12/03/2013 - Page 21 of 39

Adhesives selected for use on proprietary substrates or waterproof membranes to have documented compatibility approval from the respective manufacturers.
Apply and float thick bed cement-based adhesive to a maximum 6 mm bed thickness to the tile manufacturer's requirements. Rib surface with a notched trowel, press tiles and beat it into place with 3 mm joints, and to obtain required coverage of adhesive on the back of each tile.

GROUT
Cement based, compressible and to suit the particular location and use.
Remove spacers. Prepare joints, mix and apply proprietary grout and finish off to the grout manufacturer's requirements. Grout to finish uniform in colour, smooth and without voids, pinholes or low spots.

MOVEMENT CONTROL JOINT SEALANT
To BRANZ Good practice guide: Tiling, section 5.0.

CCC Approved Consent Document - ABA10122477 - 12/03/2013 - Page 22 of 39

CARPETING

Documents referred to in this section are:

AS/NZS 2455.1	Textile floor coverings - Installation practice, Part 1: General
	The New Zealand Carpet Manufacturers' Association Conditions of Warranty and installation guide

QUALIFICATIONS
Carpet layers to be experienced competent workers, familiar with the materials and the techniques specified and with AS/NZS 2455.

EDGE GRIPPER, TAPES, FIXING BARS
To AS/NZS 2455.

BINDER BARS
Anodised aluminium section with a fluted face.

SUBSTRATE
Before starting work inspect the substrate to ensure it will allow work of the required standard and that all fittings and fixtures around which the carpet is to be scribed, are in place.

PROTECTION
Protect adjoining work surfaces and finishes during installation and make good any damage to same.

TAPE
Tape for binding and seaming to be the type and width required by AS/NZS 2455 to suit the specified carpet and the standard of performance required.

LAYOUT
Plan the carpet layout so that seams run lengthways, traffic runs along the seam, light from windows is not across the seam and pile faces away from the main natural light source.

TEMPERATURE
Acclimatise carpet to a room temperature above 15°C through the whole of the installation.

PREPARE FLOOR SURFACE
Prepare floors for laying to AS/NZS 2455 requirements.

INSTALLATION, UNDERLAY
Installation to AS/NZS 2455 Lay at right angles to the carpet direction.

INSTALLATION, TAPED JOINTS
Tape carpet joints, fix grippers to floor, install underlay and carpet, to AS/NZS 2455.

FIX TRIMS
Fix binder bars, carpet to carpet bars, and trims to all junctions with other materials and to carpet edges, to AS/NZS 2455. Ensure that all junctions with other materials are neatly formed, with bars and trims securely fastened to the substrate, 20 mm from each end and at maximum 100 mm centres.

CCC Approved Consent Document - ABA10122477 - 12/03/2013 - Page 23 of 39

PAINTING

Documents referred to in this section are:
Resene: One-Line Specifications and Product Data Manual

PAINT TYPES
All paint coatings to be **Resene** products (which are guaranteed for consistency and performance under ISO 9001 and APAS) prepared, mixed and applied as directed in the One-Line Specifications and Product Data Manual.

GAP FILLERS
Use suitable gap fillers to match the surface being prepared. Any special primers required of the fillers must be satisfied. Refer to **Resene** surface preparation sheets in the One-Line Specifications and Product Data Manual.

INSPECT
Inspect all surfaces to be painted and report any that will not, after the preparation as laid down in the **Resene** surface preparation sheets; allow work of the required standard.
PRIMING AND SEALING
Ensure that all priming and sealing work necessary before or during construction is carried out when required.

ENVIRONMENTAL CONDITIONS
Carry out work within acceptable temperature and humidity limits, with timber dry, all to the requirements of **Resene**.

SHARP EDGES, CRACKS AND HOLES
Sharp edges, cracks and holes if present: remove and/or repair as outlined in the preamble to the **Resene** One-Line Specifications and Product Data Manual.

PREPARE ALL SURFACES
Prepare all surfaces to be coated to the requirements of the **Resene** surface preparation sheets. Use suitable gap fillers to match the surface being prepared. Any special primers required of the fillers must be satisfied. Refer to **Resene** surface preparation sheets.

APPLICATION
Apply paint by brush and/or roller to the requirements of **Resene** to obtain a smooth, even coating of the specified thickness, uniform gloss and colour. Do not spray on site without express permission.

RESENE SPECIFICATIONS
Refer to the **Resene** One-Line Specifications and Product Data Manual for surface preparation, coating sequence and application requirements as they apply to each system. Correct defective work immediately, with any recoating following the system's requirements.

SCUFF BETWEEN COATS
Between all coats remove any dust pick-up, protruding fibres and coarse particles.

FINISHED PAINT SURFACES
All finished paint surfaces to show uniformity of gloss and colour, to have the correct thickness for each coat, and freedom from painting defects such as tackiness and conspicuous brush marks. Finished work to be clean and free of any disfigurement.

PAINT SYSTEMS TO WET AREAS (Plasterboard firstly apply a sealer coat)

Undercoat & Top Coat:	Lustercryl D310	walls/ceilings
Trim:	Lusterglo	architraves, skirting, sills

PAINT SYSTEMS TO INTERIOR AREAS

Undercoat:	Resene ceiling "Flat white"	walls/ceilings
Top coat:	Resene Acrylic "Low sheen"	walls/ceilings
Trim:	Lusterglo	architraves, skirting, sills

CCC Approved Consent Document - ABA10122477 - 12/03/2013 - Page 24 of 39

PAINT SYSTEMS TO EXTERIOR AREAS

Undercoat:	Resene SpaceCote “Flat white”
Top coat:	Resene SpaceCote “Flat white”

CCC Approved Consent Document - ABA10122477 - 12/03/2013 - Page 25 of 39

HOT AND COLD WATER SYSTEM

Documents referred to in this section are:

NZBC G12/AS1	Water supplies
AS/NZS 2642	Polybutylene pipe fittings
NZS 3501	Specification for copper tubes for water, gas and sanitation
NZS 4606	Storage water heaters
NZS 4607	Installation of thermal storage electric water heaters
NZS 4617	Tempering (3-port mixing) valves
DIN 8077	Polypropylene (PP) Pipe dimensions
DIN 8078	Polypropylene (PP) Pipes Types 1, 2 & 3, General Quality
NZS 4305	Energy efficiency domestic hot water systems

Plumbers, Gasfitters and Drainlayers Act 2006

Note: Floor surfaces of any space containing sanitary fixtures or sanitary appliances must be impervious and easily cleaned. (Seal floor when Laundry is in garage)

QUALIFICATIONS
Plumbers to be experienced competent craftsman plumbers, or registered plumbers working under the direction of a craftsman plumber, familiar with the materials and techniques specified.

WATER MAIN POLYETHYLENE
High density polyethylene pipe complete with rubber ring compression type fittings.

POLYBUTYLENE WATER PIPE
Polybutylene tubing to AS/NZS 2642.2 and AS/NZS 2642.3 complete with fittings and accessories brand-matched.

EXPOSED PIPES
Chrome plated copper pipe with chrome plated brass nuts and fittings.
Faucet hoses covered with stainless steel braid and fitted with stainless steel nuts.
White polyethylene composite pipe with white nuts and accessories.
Selected pipework finish to include escutcheon plates and bends and elbows protruding from walls or fittings. All cold water pipework installed in external walls or exposed to the elements to be lagged and protected from frost.

VALVES
Pressure reducing or limiting valve, filter, non-return valve, cold water expansion valve, pressure relief or temperature valve, pressure relief valve and isolating valves to NZBC G12/AS1: Water supplies. (Set to 55º) The storage water heater control thermostat shall be set at a temperature of not less than 60º C to prevent the growth of Legionella bacteria.

15mm copper pressure relief valve from HWC (100mm max straight or bent) to discharge into 20mm @ 1:40 copper relief drain. The drain to discharge to over GT with 25mm air gap. (As per NZBC G12/AS1 cl.6.7 and Fig 12)

Tempering valve to NZS 4617 to NZBC G12/AS1: Water supplies.
Install 1 metre minimum from outlet of hot water cylinder and to manufacturer’s instructions.

ELECTRIC HOT WATER CYLINDER, MAINS PRESSURE
To NZS 4606.3, ceramic-coated steel thermal storage cylinder, insulated and complete with fittings required for installation by the manufacturer.

Install where shown complete with all the necessary fittings to the cylinder manufacturer's requirements and in accordance with NZBC G12/AS1: 6.10. Valve-vented systems to NZS 4607.

ELECTROLYTIC ACTION
Avoid electrolytic action by eliminating contact or continuity of water between dissimilar metals.

EXCAVATE
Excavate for the water main to a firm, even trench base in straight runs. Allow to backfill.

CCC Approved Consent Document - ABA10122477 - 12/03/2013 - Page 26 of 39

WATER MAIN
Lay a minimum of 500 mm below ground level (600 mm under driveways) from the utility network operator's supply through a gate valve and meter toby box to the building. Lay marker tape above the water main in backfill.

POLYBUTYLENE/POLYETHYLENE WATER SUPPLY
Size the piping layout to eliminate loss of pressure at any point by simultaneous draw-off. Run pipes complete with all fittings, support and fixing, and jointed to the pipe manufacturer's specifications, all to NZBC G12/AS1. Conceal pipework and pressure test before the wall linings are fixed.

INSTALLING HOT WATER PIPE INSULATION
Insulate all hot water pipes in accordance with the insulation manufacturer's instructions. Cut insulation sections tight between timber framing and tight between the webs of studs. Where hair felt is used, wrap around pipes in two layers in opposite directions and secure with galvanised steel wire ties.

PENETRATIONS
Provide and fit collars and escutcheon plates to match the pipework at all penetrations through constructions.

INSTALL TAPS AND FAUCETS
Install taps and faucets in accordance with the tap manufacturer's requirements. Flush out on completion. Check that washers or ceramic discs are operating correctly.

TESTING OF PLUMBING
NZBC G12/AS1 7.5 Watertightness
7.5.1 The water supply system shall be tested to ensure watertightness. An acceptable testing method is to:
a) Subject the hot and cold system to a pressure of 1500 kPa for a period of not less than 15 minutes, and
b) Inspect the system to ensure that there are no leaks.

WATER MAIN

Material:	Polyethylene
Internal diameter:	(ID)20mm/ (OD)25mm

WATER PIPE

Material:	Polybutylene
Nominal bore:	(ID)20mm/ (OD)25mm

INSULATION FOR HOT WATER PIPES

Brand/type:	Euro lagging
Inside diameter:	16/22 mm

ELECTRIC HOT WATER CYLINDER

Brand/model number:	Sunfuel Solar System
Capacity:	250 litres

NZBC G12/AS1

Table 7: Water Supply Pipework Support Spacing
Paragraph 7.1.3

Pipe material	Pipe diameter (mm)	Maximum distance between supports (m) Vertical pipe	Graded and horizontal pipe
Copper	10 – 15	1.5	1.2
	20 – 25	2.0	1.5
Galvanised steel	15 – 20	2.0	1.5
	25	3.0	2.5
uPVC	15 – 20	2.0	1.0
	25	2.4	1.2
Polyethylene and polybutylene (cold water supply)	15 – 20	1.5	0.75
	25	1.8	0.9
Polybutylene (hot water supply)	15 – 18	1.0	0.6
	20 – 22	1.4	0.7

Note:
The spacing for these pipe materials is based on the pipes being located within the *building* structure.

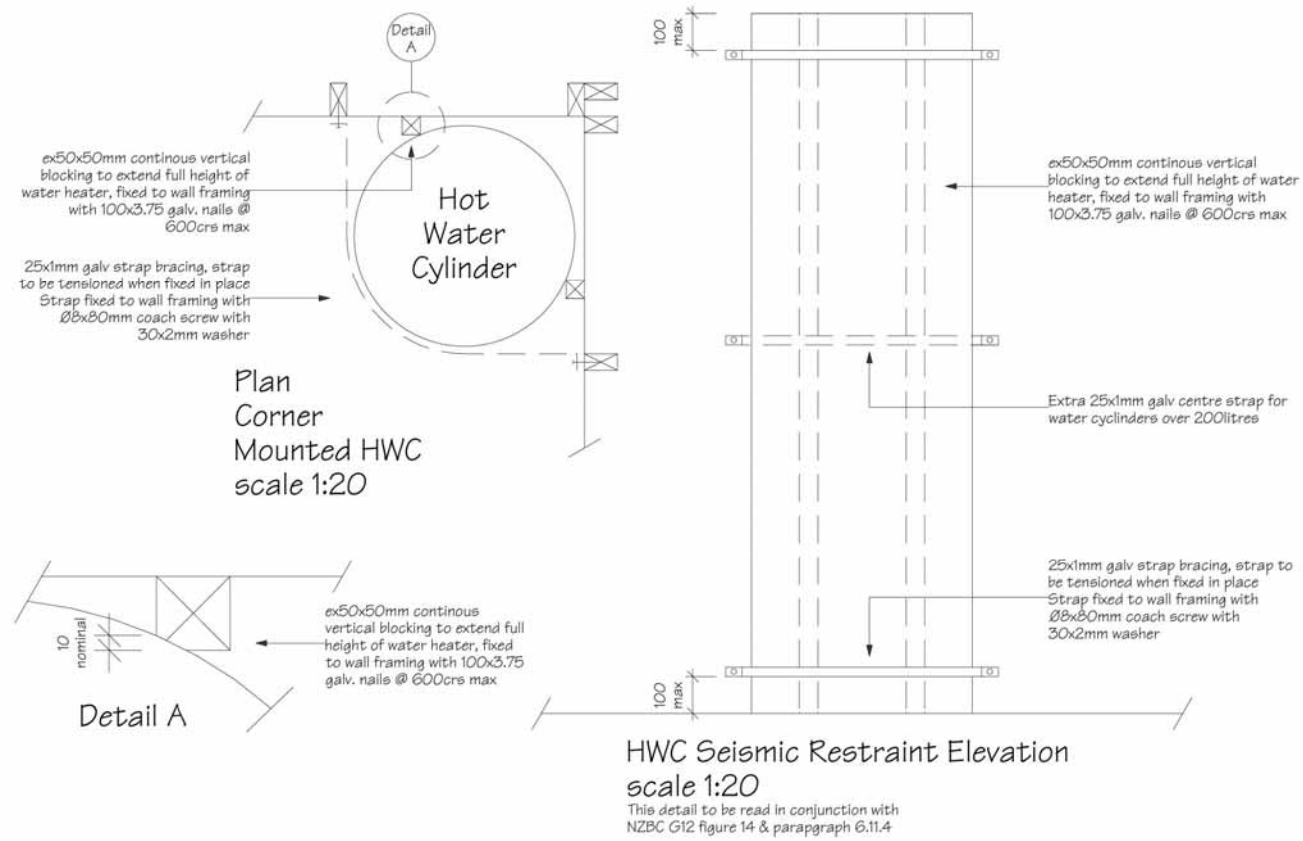

NZBC G12/AS1

Figure 16: Tempering Valve Installation
Paragraph 6.14.2 a)

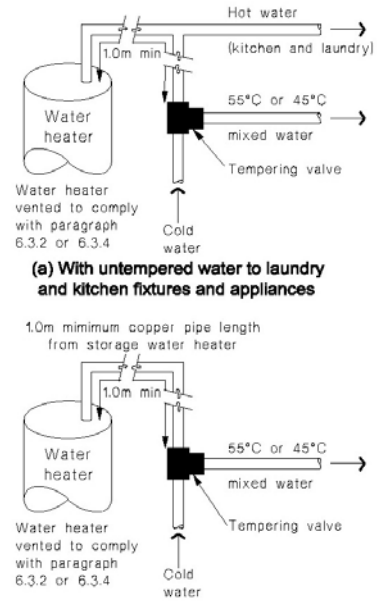

Note:
1. For optimum system efficiency the tempering valve, for other than a mains pressure system, may be located as low as practicable to achieve the manufacturer's recommended head, at the tempering valve.
2. 1.0m minimum copper pipe length from storage water heater.

Figure 8: Mains Pressure Storage Water Heater System (unvented)
Paragraphs 6.1.2 and 6.2.1 b)

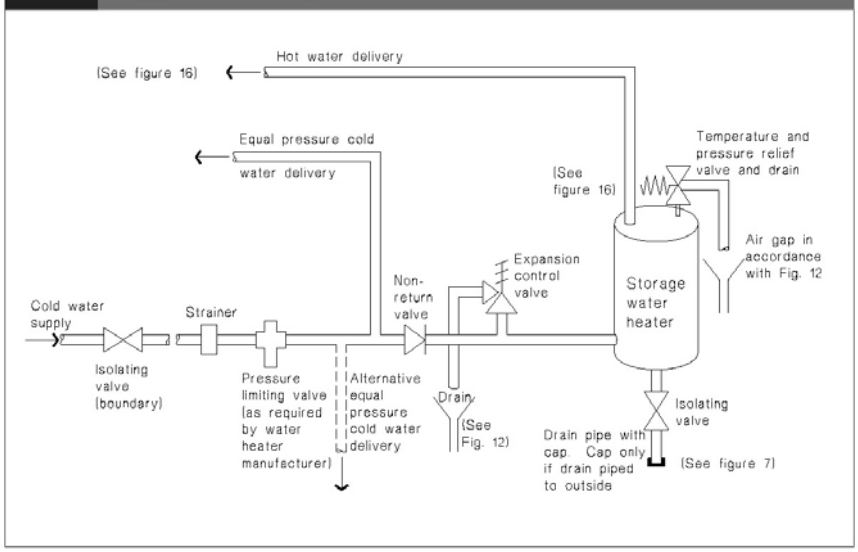

CCC Approved Consent Document - ABA10122477 - 12/03/2013 - Page 28 of 39

RAINWATER SYSTEMS

Documents referred to in this section are: -
NZBC B1, B2, E1 & E2
AS 1397 Steel sheet and strip - hot-dipped, zinc-coated or aluminium/zinc-coated
Workers to be either competent craftsman plumbers, or registered plumbers working under the direction of a craftsman plumber, or roofers, familiar with the materials and techniques specified.

Aluminium/zinc alloy coated pre-painted steel
ALUMINIUM/ZINC ALLOY PRE-PAINTED SHEET STEEL
0.55 mm sheet steel coated to AS 1397, pre-painted.

ALUMINIUM/ZINC ALLOY COATED PRE-PAINTED STEEL SPOUTING
Profile, jointing, brackets and fittings brand matched and complete to the spouting manufacturer's specifications.

DOWNPIPES
Complete with stand-off brackets and galvanised screws.

FLASHINGS GENERALLY
0.55 mm sheet steel galvanised to AS 1397, aluminium/zinc coated to AS 1397, 1.8 mm (20 kg/m^2) copperised pure lead, 0.5 mm half hard copper sheet, or proprietary rubberised perforated aluminium strip, all to location, compatibility and design requirements of BRANZ Bulletin 304 Flashing design.

Aluminium/zinc alloy coated pre-painted steel
ALUMINIUM/ZINC ALLOY COATED PRE-PAINTED STEEL FASCIA

Shape/size:	Refer to construction schedule
Brand/type:	Coloursteel
Paint coating type:	Endura/Max

ALUMINIUM/ZINC ALLOY COATED PRE-PAINTED STEEL SPOUTING

Shape/size:	Multiline Quad (Cross Sectional Area – Refer to construction schedule)
Brand/type:	Coloursteel
Paint coating type:	Endura/Max

ALUMINIUM/ZINC ALLOY COATED PRE-PAINTED STEEL DOWNPIPES

Shape/size:	Refer to construction schedule
Paint coating type:	Endura/Max

CCC Approved Consent Document - ABA10122477 - 12/03/2013 - Page 29 of 39

SANITARY PLUMBING

Documents referred to in this section are:

NZBC G1/AS1	Personal hygiene
NZBC G13/AS1	Foul water - sanitary plumbing
NZBC H1/AS1	Energy Efficiency – hot water systems
AS/NZS 1260	PVC pipes and fittings for drain, waste and vent applications
AS/NZS 1260	PVC-U pipes and fittings for drain, waste and vent application

Plumbers, Gasfitters and Drainlayers Act 2006

QUALIFICATIONS
Carry out work by or under the direct supervision of a person registered under the Plumbers, Gasfitters and Drainlayers Act 2006.

UPVC WASTE, SOIL AND VENT PIPES
UPVC pipe to AS/NZS 1260 complete with fittings brand-matched to the pipe manufacturer's requirements.

EXPOSED PIPES AND TRAPS
Chrome plate on copper pipes and associated copper and brass fittings.
White polybutylene or PVC, including all associated fittings.

SEALANT, SANITARY FIXTURES
For between sanitary fixtures and accessories and adjacent floor or wall surfaces.
1-part, silicone, containing mildew resistant agents.
Colour: White

EXECUTION GENERALLY
Carry out this work and complete all tests to NZBC G1/AS1: 2.0, 3.0 and G13/AS1.

ELECTROLYTIC ACTION
Avoid electrolytic action by eliminating actual contact or continuity of water between dissimilar metals.

INSTALL SANITARY FIXTURES
Fit and install sanitary fixtures and associated screens, elements and hardware, plumb, true to line and rigid, to the fixture manufacturer's requirements. Supply standard chrome plated brass wastes and plastic plugs on chrome plated chains with all basins, tubs and baths.

INSTALL TRAPS, WASTE AND VENT PIPES
Connect waste outlets to traps and run waste pipes and back vents concealed, sized and fixed to NZBC G13. Discharge wastes into the drainage system stack, soil pipe, or gully trap as shown. Bird proof mesh to all roof vents and vermin proof mesh to all untrapped waste pipes.

PENETRATIONS
At penetrations through constructions provide and fit collars and escutcheon plates to match pipework. Penetrations to the DPM under the slab to be sealed with DPM tape. Wall penetrations as per E2/AS1 Figure 68.
Metal Tile roof penetrations as per E2/AS1 Fig 53 & 54

NZBC G13/AS1

Table 7: Distances Between Supports
Paragraph 6.2.1

Material	Pipe diameter (mm)	Maximum distance between supports (m) Vertical pipe	Graded pipe
Copper pipes	32 to 50	3.0	2.5
	greater than 50	3.5	3.0
uPVC pipes	32 to 50	1.0	0.5
	65 to 100	1.2	1.0
	greater than 100	1.8	1.2

CCC Approved Consent Document - ABA10122477 - 12/03/2013 - Page 30 of 39

DRAINAGE

Documents referred to in this section are:

NZBC B1/AS1	Structure – general
NZBC E1/AS1	Surface water
NZBC G13/AS2	Foul Water
AS/NZS 1254	PVC pipes and fittings for storm and surface water applications
AS/NZS 1260	PVC pipes and fittings for drain, waste and vent applications
AS/NZS 4130	Polyethylene pressure pipes (PE)
AS/NZS 4058	Precast concrete pipes (pressure and non-pressure)
NZS 3104	Specification for concrete production
NZS 7643	Installation of unplasticised PVC pipe systems
	Plumbers, Gasfitters and Drainlayers Act 2006

QUALIFICATIONS
Drainlayers to hold a current licence within the terms of the Plumbers Gasfitters & Drainlayers Act 2006 and be experienced, competent and familiar with the materials and techniques specified.

CONCRETE
17.5 MPa ordinary grade to NZS 3104.

uPVC PIPES
uPVC Pipes bends, junctions, fittings and joints to AS/NZS 1254 and AS/NZS 1260.

GULLY TRAPS
To NZBC G13/AS2: 3.3, complete with grating. (NZBC G13 Fig 2)

DRAINAGE AND FILLING MATERIALS
Granular: Clean gravel or crushed stone or a blend of these. Particle size from minimum 7 mm to maximum 20 mm & AP40 compacted at 150mm layers under slab. (use AP40 compacted at 150mm layers under slab as drain bedding)
Selected: Fine grain soil or granular material suitable for bedding; excluding topsoil.
Ordinary: Top soil or other excavated materials.

STORMWATER
Dispose of stormwater on site as shown on the drawings.

CONCRETE ENCASEMENT
Concrete encase shallow drains and drains under driveways, on a 100 mm deep 17.5 MPa concrete bed reinforced with three 10 mm mild steel bars. Surround pipes with a polythene membrane to allow movement and encase in 100 mm 17.5 MPa concrete.

BEDDING AND BACKFILL
Backfill drain lines in 150 mm layers, well tamped but without disturbing the drains. Finish off with 150 mm of topsoil, slightly mounded above the finished ground line. As per NZBC G13/AS2 Bedding and backfilling

SUPPORT AND THERMAL MOVEMENT
The plumbing system shall accommodate without failure the expected longitudinal movement in pipes resulting from temperature changes. All copper and PVC-U pipes shall incorporate expansion joints to comply with clause NZBC G13/AS1 6.3.1

TESTING OF DRAINAGE
NZBC G13/AS1 - 7.0 Watertightness
7.1 Test methods
7.1.1 All above ground sanitary plumbing pipework shall be tested by water test or air test to verify that the system is watertight.
7.1.2 Water test: The method described in Section 10 of NZS 7643 may be used for ensuring watertightness of above ground sanitary plumbing pipework.
7.1.3 Air tests may be carried out in accordance with either clause 12.3.2 of AS/NZS 3500.2.2 or Paragraph 8.3 of E1/VM1.
NZBC G13/AS2 - 6.0 Watertightness
6.1 Testing
6.1.1 All sections of the drainage system shall be tested by water test or air test to ensure watertightness.
COMMENT:

CCC Approved Consent Document - ABA10122477 - 12/03/2013 - Page 31 of 39

Testing should be undertaken before backfilling for the easy identification of any leaks.

6.1.2 Water test

NZS 7643 Section 11 gives an acceptable method for ensuring watertightness of below ground uPVC drainage pipework.

6.1.3 Air tests may be carried out in accordance with either clause 12.3.2 of AS/NZS 3500.2.2 or Paragraph 8.3 of E1/VM1.

6.1.4 Where a disused drain is being reinstated, the disused drain shall be tested to verify that the drain is sound.

6.1.5 Where a building is proposed to be built over an existing drain, the drain shall be verified as being sound both before and after construction.

NZBC G13/AS2

Figure 7: Bedding and backfilling
Paragraphs 5.2.1, 5.3.1 and 5.4.1

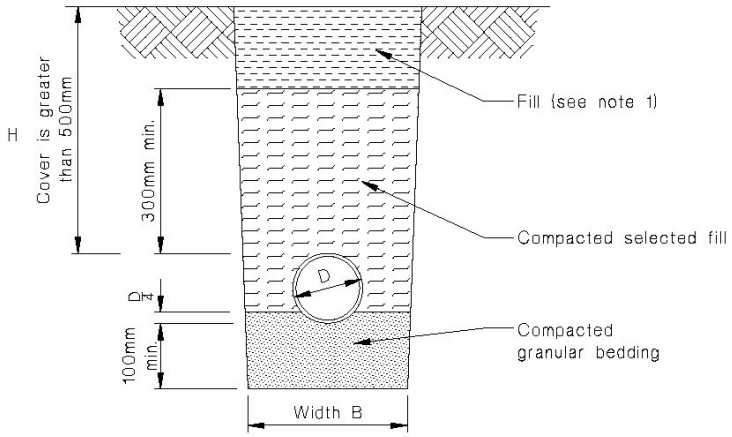

(a) Bedding type 'B' of NZS 7643
Cover greater than 500mm

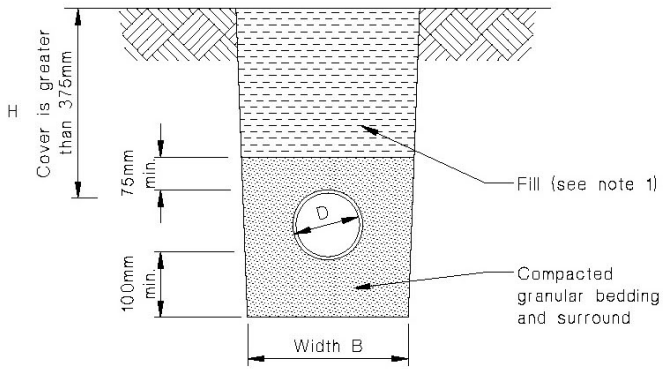

(b) Bedding type 'D' of NZS 7643
Cover greater than 375mm

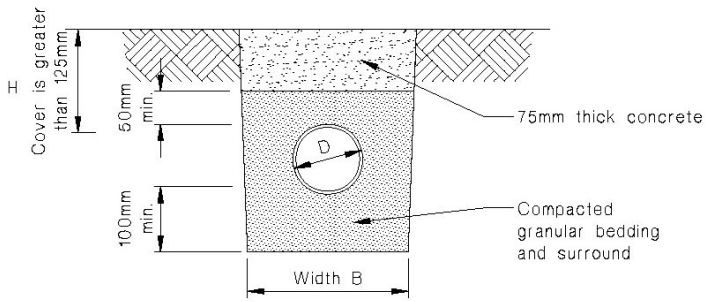

(c) Cover between 125mm and 375mm

NOTE:
1. Fill shall be:
-Ordinary fill where drains are located below gardens and open country.
-Compacted selected fill where the drains are located below residential driveways and similar areas subject to light traffic.

CCC Approved Consent Document - ABA10122477 - 12/03/2013 - Page 32 of 39

GAS

Documents referred to in this section are:

NZBC G10/AS1	Piped services (Gas)
NZS 5258	Gas distribution
NZS 5261	Installation of gas burning appliances and equipment
NZS 7646	Polyethylene pipes and fittings for gas reticulation

Electricity Regulations 1997
Hazardous Substances and New Organisms Act 1996
Gas Regulations 1993
Plumbers, Gasfitters and Drainlayers Act 1976

REGULATIONS
Comply with the Gas Regulations, Electricity Regulations and other network utility operator's requirements. Give notices for inspections and carry out tests as required.

PRIMARY CONNECTION
Include for the cost of the primary gas connection, complete with excavation and backfilling.

QUALIFICATIONS
Gasfitters to be experienced competent craftsman gasfitters, or registered gasfitters working under the direction of a craftsman gasfitter, familiar with the materials and techniques specified.

PIPING DESIGN
Design the piping system with pipe sizes to give a minimum pressure at any appliance inlet of 1.13 kPa for natural gas, when all appliances are in use; and with a maximum design pressure drop from meter outlet to any appliance of 80 Pa. All to NZS 5261.

PRESSURE TEST
Pressure test the system for leakage to NZS 5261 before pipework is concealed by linings.

FINAL INSPECTION AND TEST
Submit the work for inspection and test and prove to the satisfaction of the gas retailer that the installation complies with all Acts and Regulations and has been tested for leakage and proved to be sound.

CERTIFICATION CERTIFICATE
Provide a Gasfitting Certification Certificate as required by Regulation 24 of the Gas Regulations 1993.

COPPER PIPE
Complete with fittings to NZS 5261.

POLYETHYLENE PIPE
To NZS 7646 and complete with fittings to NZS 5261.

ISOLATING VALVES
Manual shut-off valves to NZS 5261.

EXECUTION GENERALLY
Carry out the whole of this work to the requirements of NZBC G10/AS1 and NZS 5261.

CYLINDER INSTALLATION
Confirm the location of the cylinder platform with the owner. Allow to install as detailed.

INSTALL PIPING
Run the system, completely concealed, in the most suitable type of pipe for each part of the installation, bent, supported, jointed and complete with all fittings to NZS 5261. Confirm the type of pipe to be used and its location.

INSTALL GAS APPLIANCES
Fit and connect the gas appliances to NZS 5261, complete with flues where required and to the appliance manufacturer's requirements.

CCC Approved Consent Document - ABA10122477 - 12/03/2013 - Page 33 of 39

Hazardous Substances and New Organisms Act 1996.
Compliance guidelines are set out below.

* Cylinders shall be positioned on a concrete base or concrete pavers.
* An approved hood, covering such fittings as valves, hoses, seals plus cylinder valve caps shall be fitted and the appropriate warning notice located on or beside the gas cylinders.
* Exchange cylinders shall have not less than 150mm.
* An approved method of restraint shall be installed to prevent the likelihood of cylinders falling, e.g. chain fixed to wall.
* Openings into a building or a drain are not permitted within 1 metre of the gas cylinders.
* The surface of building elements (including fences) within 1 metre of the cylinders is to be sealed to prevent gas from spilling to the neighbouring site or under the building, and be of non combustible construction.

* 9 kg cylinders for gas hobs in kitchens shall be installed outside.
If this is not possible, they must be in a position where they are directly vented to the outside.

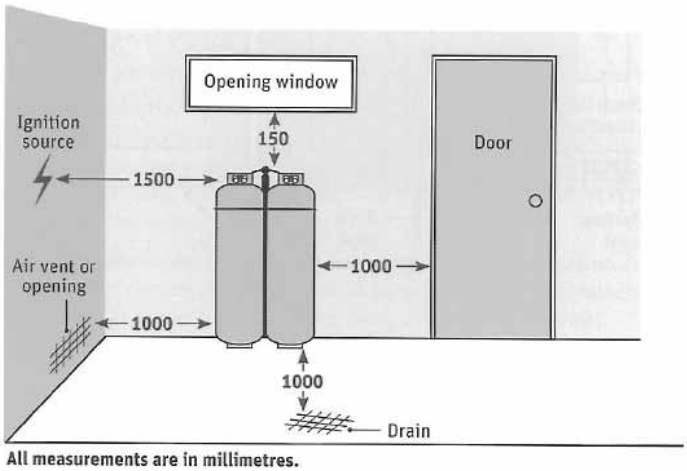

All measurements are in millimetres.

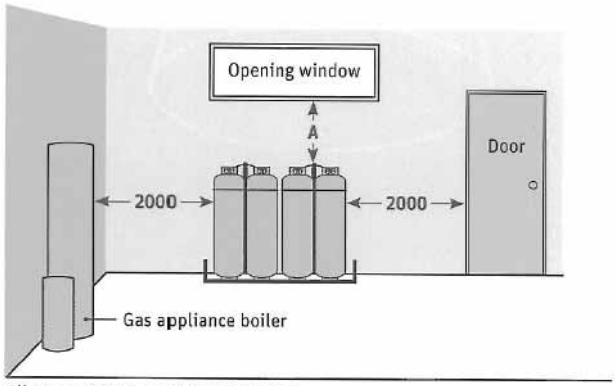

All measurements are in millimetres.
A = 150mm for exchange cylinders or 500mm for cylinders filled on location.
The measurement is taken from the top of the cylinder valve.

GENERAL CLEARANCES
The diagram opposite is to assist in determining where an External continuous flow water can be installed.
A = min 500mm
B = min 500mm
C = min 1500mm
D = min 500mm
E = min 300mm
F = min 300mm
G = min 300mm

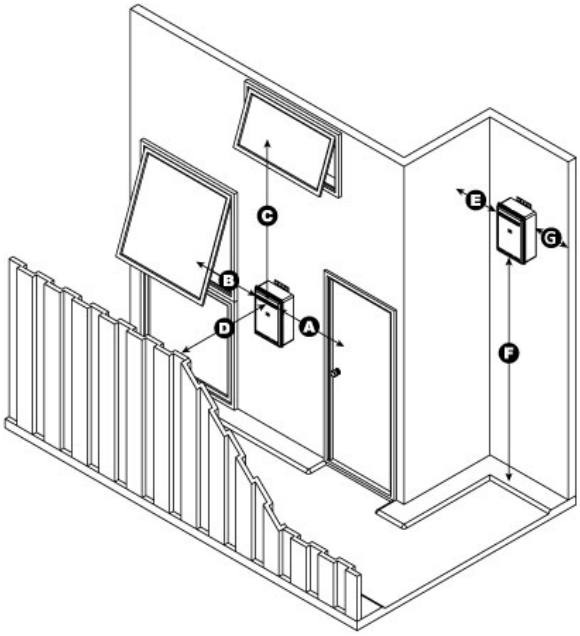

ELECTRICAL

Documents referred to in this section are:

NZBC F7/AS1	Warning systems, 3.1 Domestic smoke alarms
NZBC G2	Laundering – Service connections
NZBC G3	Food Preparation and Prevention of Contamination
NZBC G8	Artificial Light - Illuminance
NZBC G9/AS1	Electricity, 1.0 Electrical Installations within domestic dwellings
AS 1670	Part 6: Smoke Alarms
AS/NZS 3000	Wiring Rules
AS/NZS 3008	Electrical installations - Selection of cables 3008.1.2: Typical New Zealand installation conditions
AS/NZS 5000.2	Electric cables - Polymeric insulated - For working voltages up to and including 450/750 V
NZECP 51:2004	New Zealand Electrical Code of Practice for Homeowner/Occupier's Electrical Wiring Work in Domestic Installations

PVC-insulated cables for electric power and lighting
Electricity Regulations
New Zealand electrical codes of practice (ECP)

Illuminance at floor level shall be no less than 20 lux as per NZBC G8.3 - Performance requirement. Minimum requirement: 1 standard lighting fixture per 10m² minimum. (per room) Hallway requires 1 lighting fixture per 4.7 lineal meters minimum. Lighting areas based on 100w closed abutted (CA80 or CA135) down light, 100w batten holder & 100w ceiling pan. (Where energy efficient bulbs are used they shall have an equivalent wattage to the minimum stated)

LIGHTING SCHEDULE (Minimum per area/room)

2 LF/room	Living, kitchen, dining, family, activity, media, lounge & bedroom.
1 LF	Hall (1 LF per 4.5 lineal metres min.)
1 LF/bay	Garage
1 LF	Entry, toilet, bathroom, laundry, WIR, store.
1 LF	Other rooms (1 LF per 10m² min.)

KEY

LF	Standard Lighting Fixture – 100w Down light (CA80 or CA135), 100w Batten holder or 100w Ceiling Pan
H	Halogen – 50w (1 H per 5m² min. or 1 H per 2.2 lineal metres)

LIGHTING LAYOUT EXAMPLES

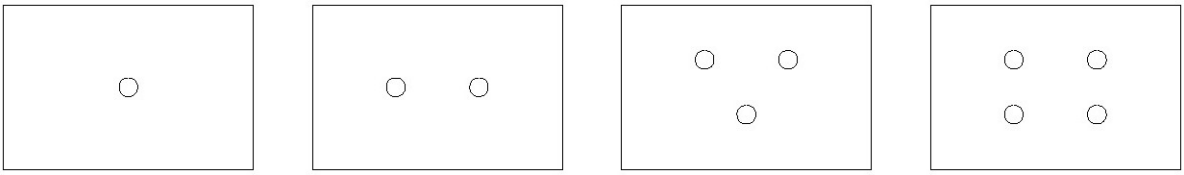

Single (1LF) Double (2 LF) Triple (LF) Quad (4 LF)

Lighting to be spaced out evenly.

Note: The above lighting schedule is the minimum requirement. The final layout is by owner on site but will not be less than the above schedule.

COMPLY
Comply with the referenced Electricity Regulations, Standards and the New Zealand electrical codes of practice for listed and prescribed work and with the utility network operator's requirements. Apply for the service connection.

QUALIFICATIONS
Carry out work by or under the direct supervision of a holder of a practising certificate under the Electricity Regulations.

CCC Approved Consent Document - ABA10122477 - 12/03/2013 - Page 35 of 39

CERTIFICATE OF COMPLIANCE
Supply a certificate of compliance to the owner, as required by the Electricity Regulations, and in particular, clauses 16, 34 and 35. Allow the network utility operator to test before the meter installation, listed work inspection, polarity check and livening of supply.

MAINS SUPPLY, SINGLE PHASE
Tough plastic sheathed neutral screened cable to AS/NZS 5000.2 and AS/NZS 3008.1.2, with a minimum rating of 60 amps per phase. Include pilot cable where required by network utility company.

MAIN EARTH - Provide a plastic toby box or UPVC tube to contain and protect the earth pin. Fix the connecting earth wiring securely against wall surfaces. Earth Bar to be bonded to the reinforcing mesh.

RCD protection to AS/NZS 3000

Bond together and to earth all plumbing fittings not adequately isolated, to the Electricity Regulations and to the fitting manufacturer's requirements.

CABLES
Tough plastic sheathed copper conductors to AS/NZS 5000.2, stranded above 1.0 mm^2, and to AS/NZS 3008.1.2. Minimum sizes. Increase sizes if the method of installation, thermal insulation, cable length or load will reduce the cable rating below that of the connected load, or produce an excessive voltage drop.

Heat resistant cable for final connections to all heated appliances, and high temperature cable in ambient conditions may be above 35°C.

METER BOX
Proprietary manufactured, zinc plated powder coated metal case, weatherproof if mounted outdoors, and complete with meter mounting, main switch and fuse.

DISTRIBUTION BOARD
Proprietary manufactured heavy duty plastic fire resistant enclosed construction, complete with neutral and earth busbars, MCBs, 30 mA RCDs and 60 amp main switch, complete with 20% spare capacity to AS/NZS 3000. All protective devices: 6kA MCBs of the appropriate rating.

MINIATURE CIRCUIT BREAKERS
Miniature moulded case circuit breakers

WALL BOXES
Standard size in plastic, with 2 or more gang size, all screw fixed.

SWITCH UNITS
Sixteen amp minimum rated, 230 volt polycarbonate flush plate units.

Fit all single and double switch units and socket at the following heights (to the centre of the unit) unless shown otherwise on the drawings.
Switch Units: 1000 mm & at least 500mm from corners.
Socket Units: 150 mm above work benches,

Mount switches vertically and socket units horizontally. Label all switch units that control electrical equipment by colour filled engraving on the switch plate.

HOT WATER SYSTEM SWITCH
One way 20 amp switch complete with cable clamp for flexible PVC conduit to element enclosure.

SWITCHED SOCKET UNITS
Ten amp, 230 volt polycarbonate flush plate 3 pin flat NZS combination switch units, single or multi gang.

SMOKE ALARMS
To AS 1670 & Smoke alarms shall be installed on or near the ceiling in accordance with AS 1670.6 and the manufacturer’s instructions.

LAUNDRY
No less than 1x 10amp socket outlet to be provided adjacent to space provided for washing machine.

KITCHEN
No less than 1x 10amp socket outlet to be provided in space behind Refrigerator.
Provide 1x fixed outlet to cooking appliance

GARAGE DOOR CONTROLLERS
Provide single switched socket outlet for the door controller to plug into.

LIGHT FITTINGS
All fittings complete with lamps, install light fittings in locations as directed by the owner, and in accordance with the fitting manufacturer's requirements and no less than the lighting schedule.
All downlights to be closed and abutted, halogen downlights to have factory heat shields.

CIRCUIT PROTECTION
Install MCBs to protect each final sub circuit sized for circuit maximum loading.

Domestic
Install RCD protection at the switchboard of final sub circuits controlling socket outlets and lighting except for:
- Fixed cooking equipment, heating, HWC and A/C units

SET-OUT
Unless specifically detailed, confirm on site the exact location, disposition and mounting heights of all outlets, fittings, equipment, penetrations, and use of exposed wiring with the owner. Fix outlet items level, plumb and in line.

CABLING
Install with a maximum of 17 light outlet units or 6 double or single switched socket units on any circuit. Minimum 2 lighting circuits per installation. Separate circuits for all electric heating appliances. All cabling run concealed. No TPS cable laid directly in concrete. Locate holes in timber framing for the passage of cables at the centre line of the timber member. Install cable in conduits where required to pass through concrete or underground.
Complete all labelling in clear machine printed permanent manner. Include label under each controller, switch and circuit breaker on distribution boards. Include a warning notice if light dimmers are used in the installation. List the rating of each circuit.

WALL BOXES
Flush mounted in cavity construction.

EXTRA LOW VOLTAGE LIGHTING
Where remote transformers are used for ELV lamps, connect from transformer to lamp with minimum 2.5 mm^2 conductor, to ensure voltage drop in transformer and conductor does not exceed 0.8 volts. Connect lamps 50 watt or greater matched to no more than one per transformer, located as close as practicable to the lamp. Ensure transformers and rear of light fittings are adequately ventilated and clear of any thermal insulation.

ELECTRIC HOT WATER SYSTEM
Wire as a separate circuit through a wall-mounted isolating switch, with the cable from switch to element encased in heat resistant conduit, clamp fixed at each end. Hot water cylinders, thermostats and 3000 watt element supplied and fitted under HOT AND COLD WATER SYSTEM.

COMPLETION
Leave work operating correctly, with equipment clean and all lamps operational.

CCC Approved Consent Document - ABA10122477 - 12/03/2013 - Page 37 of 39

Management of Site Safety

The main contractor to undertake best practice systems to manage health and site safety.
Building supervisors are all site safe qualified. The contractors are inducted on our Health and Safety policy and also provide the main contractor with documentation on their Health and Safety Management systems and also fill out a health and safety questionnaire.

The main contractor (Noted on specifications cover sheet) undertakes to manage hazards by elimination, isolation or minimisation in that order.

There is a Hazard Register posted on site at all times and all sub trades and suppliers required to record any potential hazards introduced onto site.

Earthworks and trenching will generally be back filled on same day but if this is not possible, barriers will be erected to minimise hazard.

To ensure site is clear, work areas are to be kept clean and tidy with receptacles provided and areas allocated areas for waste and refuse.

Chemicals and paints will be stored in original containers in a secure and well ventilated place appropriate to the product.

Building materials stored on site will be stacked so they cannot fall or protrude dangerously.

Public visiting site are instructed to report to site foreman who will ensure public are provided with a high visibility vest which must be worn on site at all times. Site foreman to ensure public are detoured from hazardous areas.

Fencing to keep out unauthorised personel. Under NZBC F5 – Construction and Demolition Hazards Clause 1.1.1, a 2.0 metre fence is required for protection of public.

Non-work Periods

The main contractor and sub contractors have responsibility to ensure public is not endangered in any way and site is safe during non-work periods

All sites have sign posted at entry stating ‘Authorised personnel access only and please report to site foreman.

Tools locked away at end of day.

CCC Approved Consent Document - ABA10122477 - 12/03/2013 - Page 38 of 39

EROSION AND SEDIMENT CONTROL PLAN

(Please also refer to the Drainage Plan and Rainwater & Drainage Sections of this Specification.)

The main contractor will use the relevant erosion and sediment control measures to meet the requirements for this site.

Provide protection for neighbouring sites from rubbish or sediment contamination.

Erosion Control
Minimum existing vegetation and soil will be removed from the site,
Sediment Control measures will be in place before earthworks begin
Earthworks will keep to a minimum.
Stockpiles will be delivered as late as possible, located within the sediment control zone, and protected from runoff and covered where necessary.
Trenching will where possible be done at one time for all services. Contractors will be requested to set out, dig, and backfill trenches in a such as way as to minimise erosion and runoff.
Hard wastes will be placed in the bins provided by the Company.
Clients will be encouraged to landscape and cover exposed soil on their site as soon as possible.

Sediment and Run-off Control
Upslope water will be diverted from the site where possible.
Sediment controls will be placed at the bottom of the site to minimise runoff leaving the site. These may involve sediment fencing, supplemented with straw bales on steep areas.
Existing vegetation will be used where possible to minimise runoff
Sump inlets will be protected from sediment runoff.
Storm water down pipes will be connected as soon as practicable to the permanent Storm water system once the roof is laid.
Contractors will be required to comply with these control measures
Wash down and wet trade runoff will be trapped and controlled on site
Sediment control measures will be regularly inspected and maintained.

Site Access
Stabilised access from the road to the platform will be provided.
A runoff diversion bund will be included in the site access way if required.
Sediment on footpaths and roads will be removed as soon as practicable

CCC Approved Consent Document - ABA10122477 - 12/03/2013 - Page 39 of 39