Sharalyn Fraser
Agency

Statement of passing over information – This information has been supplied by the Vendor or the vendor's agents. Accordingly, Sharalyn Fraser Agency (Ownly Limited licensed (REA 2008) is merely passing over the information as supplied to us by the vendor or vendors agents. We cannot guarantee its accuracy and reliability as we have not checked, audited, or reviewed the information and all intended purchasers are advised to conduct their own due diligence investigation into the same. To the maximum extent permitted by law Sharalyn Fraser Agency (Ownly Limited licensed (REA 2008) does not accept any responsibility to any person for the accuracy of the information herein

KAPITI COAST
DISTRICT COUNCIL

CODE COMPLIANCE CERTIFICATE

SECTION 95, BUILDING ACT 2004

THE OWNER

Ward Anthony John & Ward Lorna Anne	No.	110397
35B Kotare Street	Issue date	26/02/13
Waikanae 5036	Application date	6/07/11

THE BUILDING

Street Address	35B Kotare Street, Waikanae
Valuation No.	1496061603
Legal Description	LOT 1 DP 409453 C/T 34B/419
Intended Use	Residential dwelling
Intended Life	Specified as Over 50 years years
Current Use	
Proposal	Build new house at north end of site. Build shed and garage at south end of site. Construct retaining wall on excavation for drive access.
Estimated Value	$500,000

Code Compliance

The building consent authority named below is satisfied, on reasonable grounds, that –

a) The building work complies with the building consent; and

b) The property owner must follow and carry out the manufacturers prescribed maintenance procedures.

Signed for and on behalf of the Kapiti Coast District Council:

Signature: RBrook **Date:** 26/2/13

KCDC Form 342 ver. 1

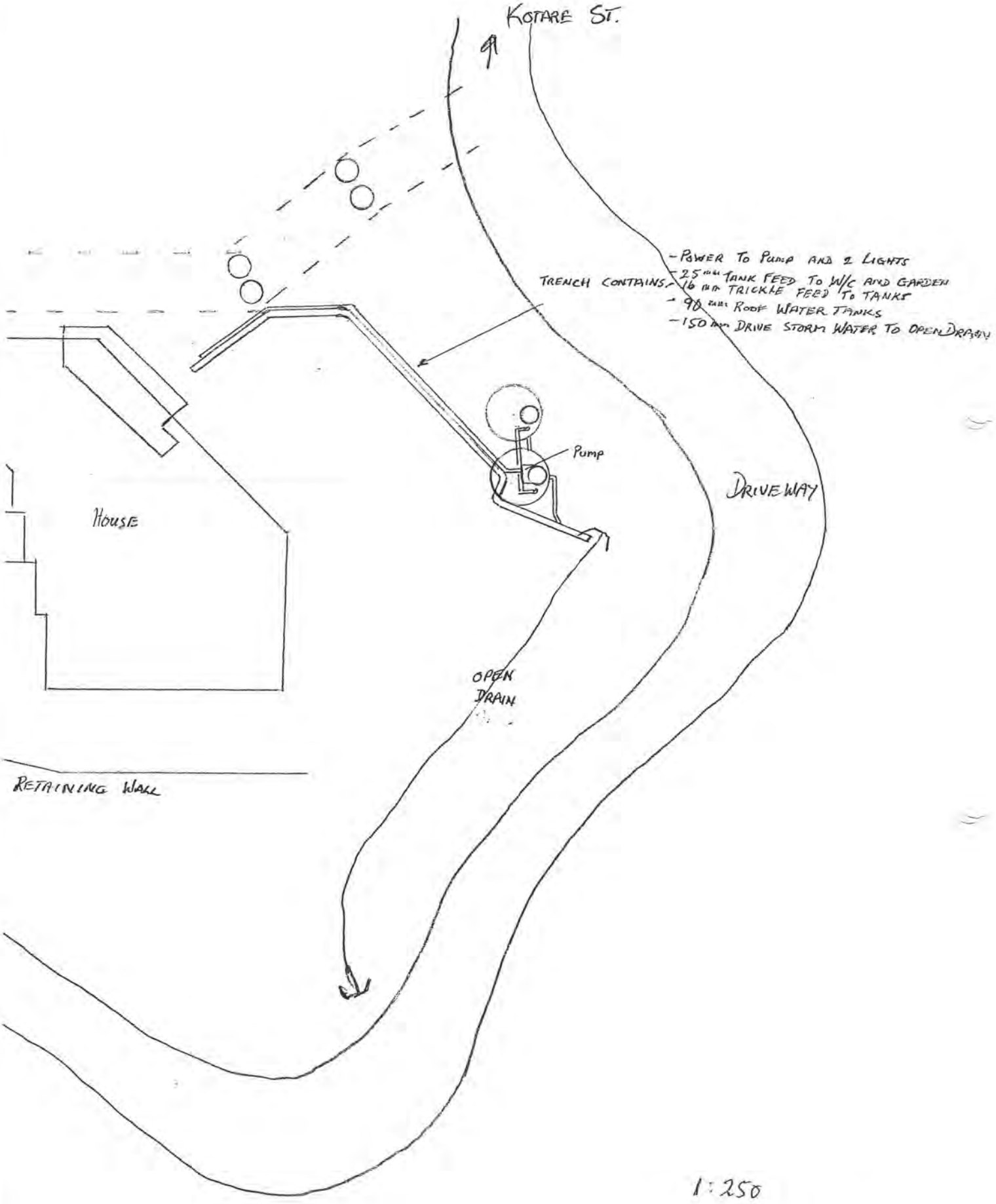
KOTARE ST.
TRENCH CONTAINS:
- POWER TO PUMP AND 2 LIGHTS
- 25 mm TANK FEED TO W/C AND GARDEN
- 16 mm TRICKLE FEED TO TANKS
- 90 mm ROOF WATER TANKS
- 150 mm DRIVE STORM WATER TO OPEN DRAIN
Pump
DRIVEWAY
HOUSE
OPEN DRAIN
RETAINING WALL
1:250

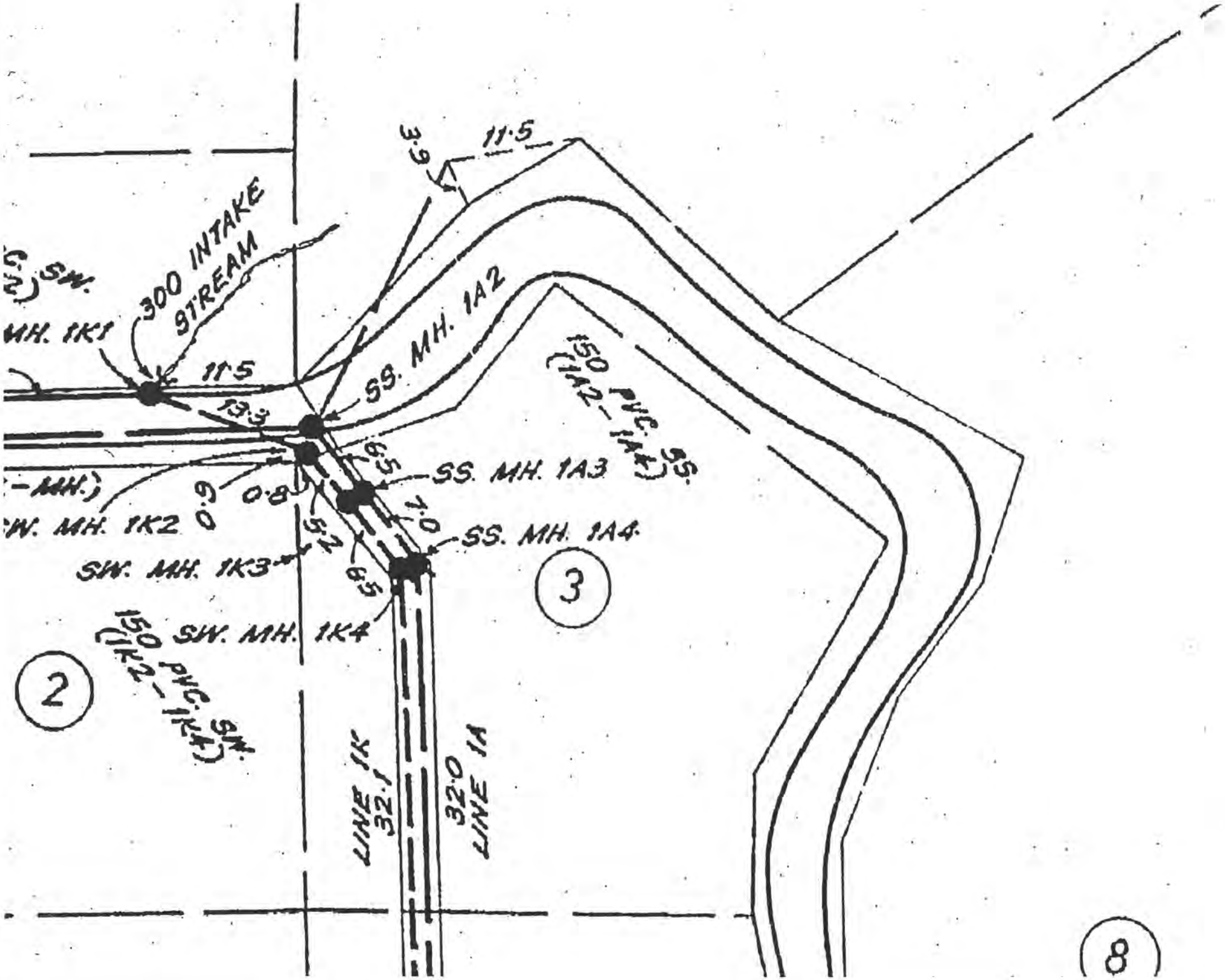
3.9
11.5
300 INTAKE
STREAM
SW.
MH. 1K1
11.5
13.3
SS. MH. 1A2
150 PVC
(1A2 – 1A4)
SS.
6.5
SS. MH. 1A3
0.9
0.8
7.0
SS. MH. 1A4
SW. MH. 1K2
0
5.2
SW. MH. 1K3
6.5
SW. MH. 1K4
3
2
150 PVC
(1K2 – 1K4)
SW.
LINE 1K
32.1
32.0
LINE 1A
8

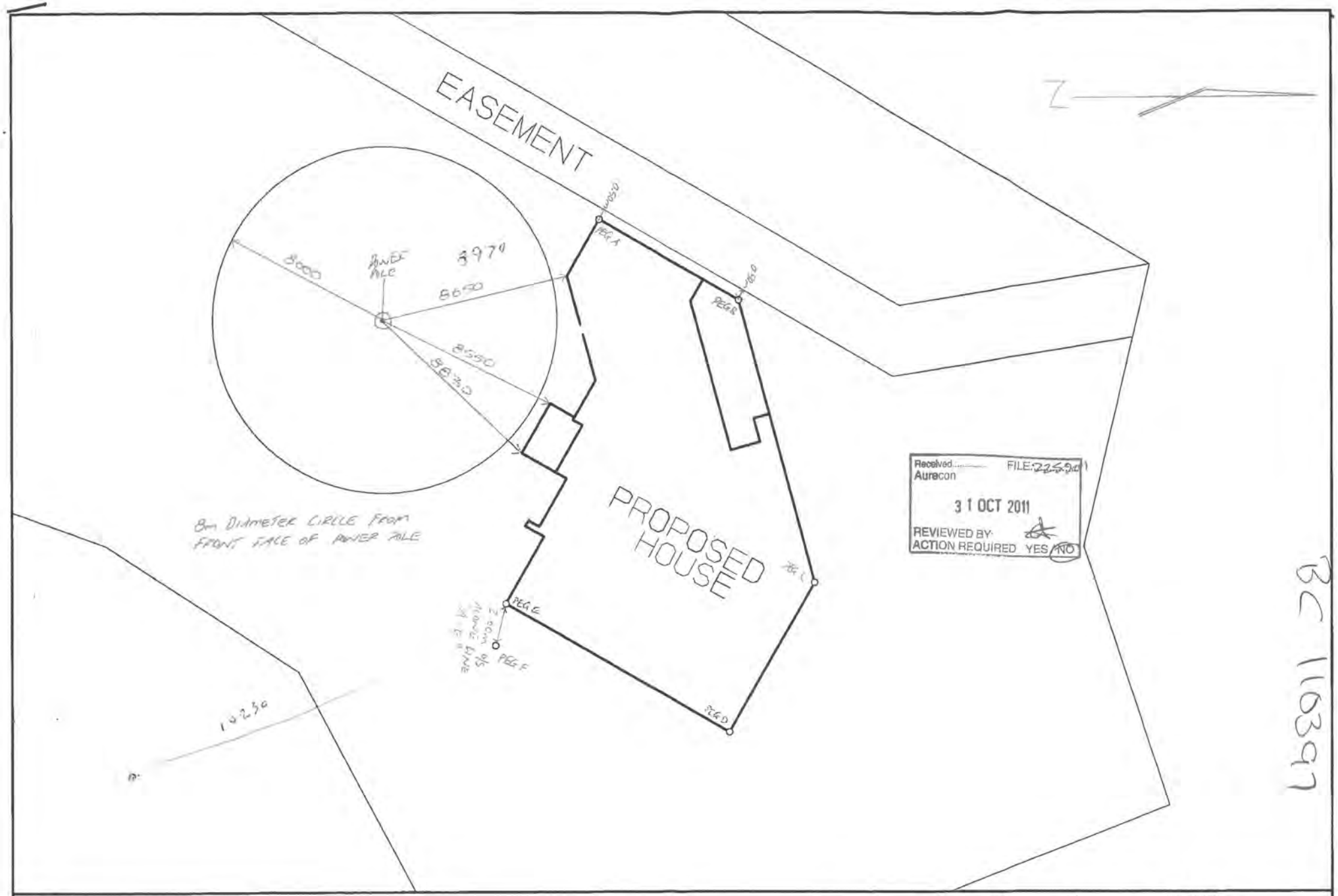

BC 110397

AURECON – CRAIG HURFORD

12d Model
Scale 1:100
Fri Oct 21 09:45:19 2011

Building Inspector and Brian Sweetman. (Bierlden)
Confirmed position of building against this plan
on site Nov. 2011.

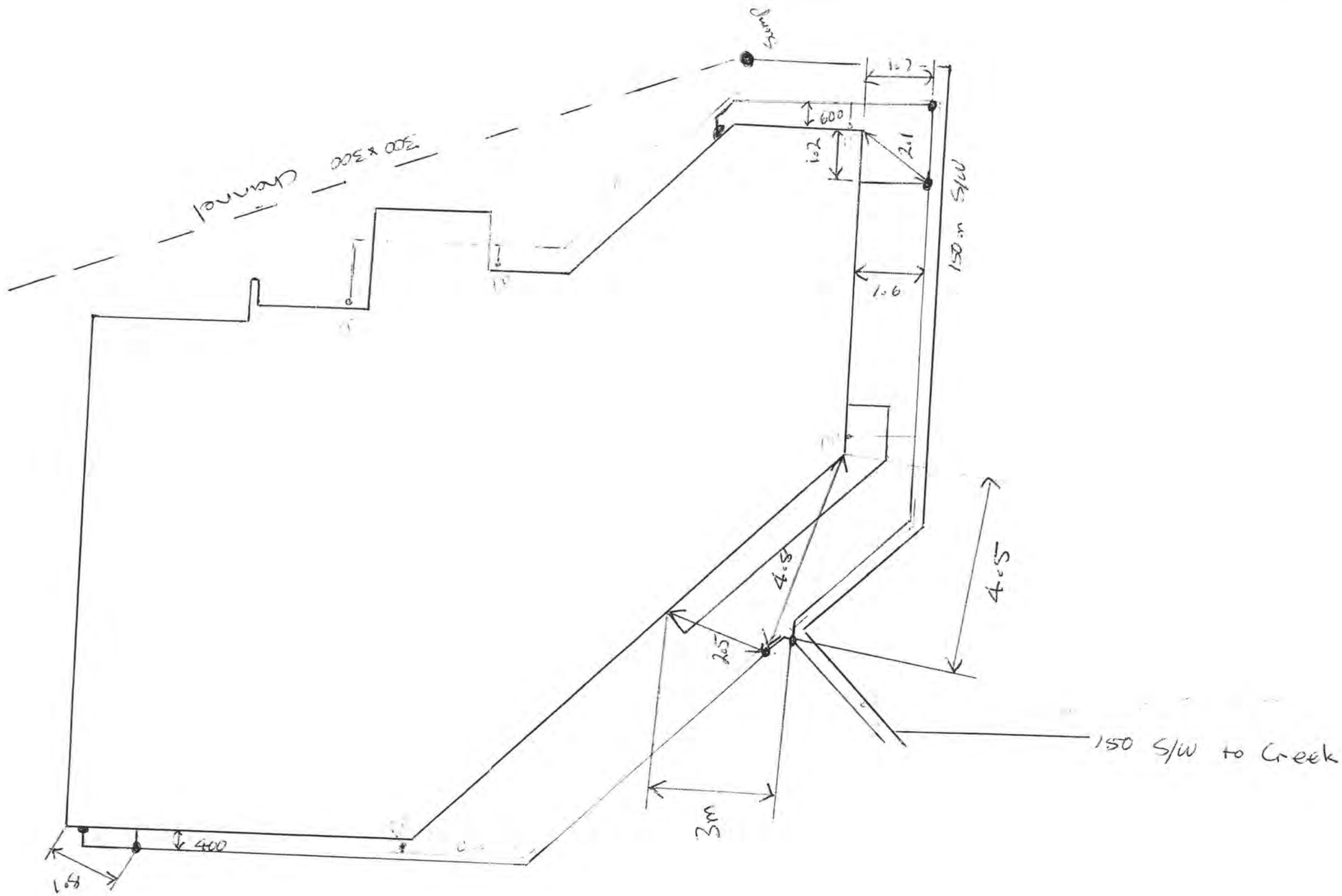

35 B Kotare ST

Waikanae

The drain layer is to fill out drainage producer statement form and draw a neat as laid drawing and return to Council.Please show all services including under slab drainage

BC 110397

A drainage inspection is required

BED DRAINS IN PEA METAL

BUILDER TO ENSURE THAT PROPOSED FOUNDATION HEIGHT WILL ALLOW A SATISFACTORY DRAINAGE CONNECTION TO THE COUNCILS SEWER

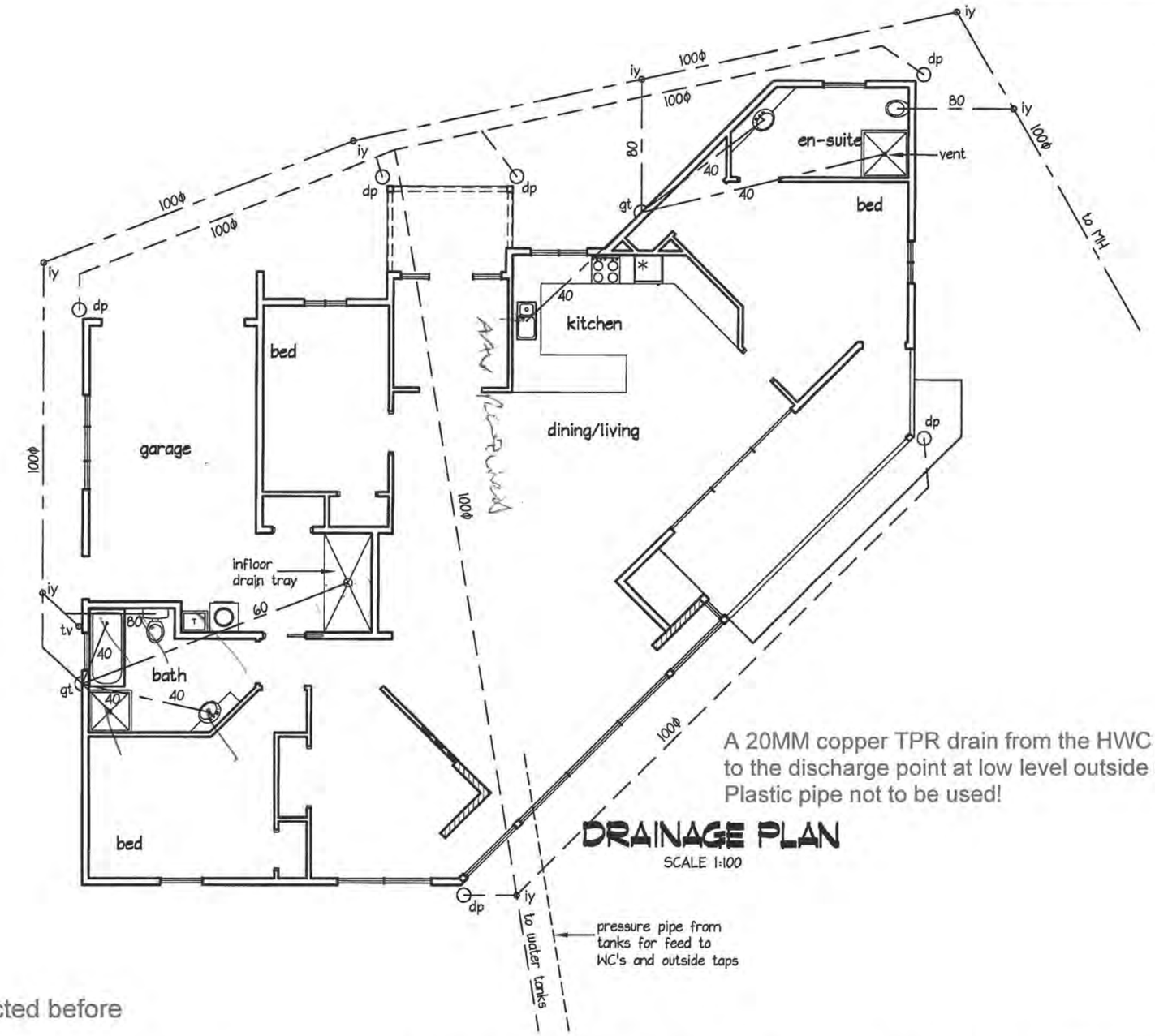

APPROVED BY PLUMBING AND DRAINAGE Simon C 12/7/2011

00104

A 20MM copper TPR drain from the HWC is to run from the tundish to the discharge point at low level outside of the building at low level Plastic pipe not to be used!

DRAINAGE PLAN

SCALE 1:100

Pipes under the slab to be inspected before covering

the contractor shall check and verify dimensions before construction

WASTEPIPES LONGER THAN 3.5M ARE TO BE VENTED

designscape
shark bait ltd
Civil, Structural and Building design
http://www.designscape.net.nz
email info@designscape.net.nz

Allan Pullenger AIPENZ CertETn
298 Rosetta Road
sunny Raumati

phone & fax 04 902 8528
Mob 027 442-0486

WARD HOUSE
35B KOTARE ST-WAIKANAE
PROPOSED DWELLING

scale	1:100
date	June 2011
drawn	Stuart Jackson
designed	Allan Pullenger

plan number 2690-01

Sheet 04 of 21

Endorsements made on any single page apply equally to the entire project.

Noisy Equipment
It is the responsibility of the owner to ensure that no work with noisy equipment shall be carried out before 7:30 a.m. or after 6 p.m. Monday to Saturday. During the week there may be workers on site from 6:30 a.m. quietly preparing for work. Work with noisy equipment is not permitted on Sundays or public Holidays.

BC 110397

HIGH WIND ZONE

ENGINEERS DESIGN
This project contains elements specifically designed by an engineer. The owner/builder is required to ensure the engineer inspects the work and provides KCDC with written evidence of the inspection.

CAUTION
Plans have been digitally reproduced and may not be to scale.

APPROVED BY BUILDING
Stuart Nepia
18/07/2011

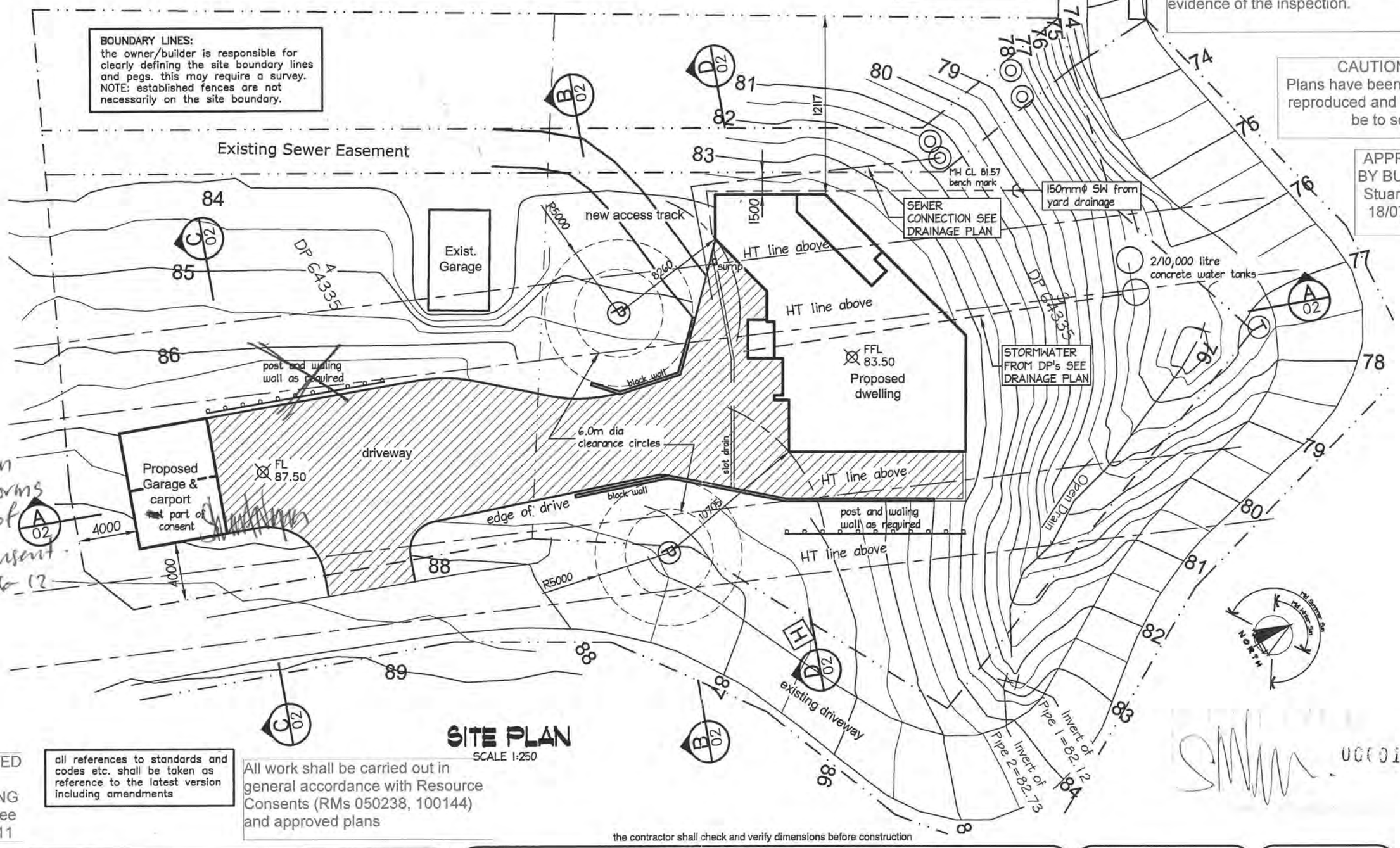

Totalspan garage forms a part of this consent. 12-06-12

SITE PLAN
SCALE 1:250

APPROVED BY PLANNING
Janice Lee
2/09/2011

all references to standards and codes etc. shall be taken as reference to the latest version including amendments

All work shall be carried out in general accordance with Resource Consents (RMs 050238, 100144) and approved plans

the contractor shall check and verify dimensions before construction

designscape
shark bait ltd
Civil, Structural and Building design
http://www.designscape.net.nz
email info@designscape.net.nz

Allan Pullenger AIPENZ CertETn
298 Rosetta Road
sunny Raumati

phone & fax 04 902 8528
Mob 027 442-0486

WARD HOUSE
35B KOTARE ST-WAIKANAE
PROPOSED DWELLING

scale	1:250
date	June 2011
drawn	Stuart Jackson
designed	Allan Pullenger

plan number
2690-01
Sheet 01 of 21

ENSURE THE BUILDING AND SERVICES ARE CLEAR OF THE EASEMENT.

Storm water from the building to connect into the approved outfall

90mm Stormwater drain is to be used Not downpipe.

APPROVED BY BUILDING
Stuart Nepia
OFFICER
10/05/2006

APPROVED BY P & D
Simon Copp
Officer
27/4/06

APPROVED BY PLANNING
Vijay Soma
Officer
9/01/2006

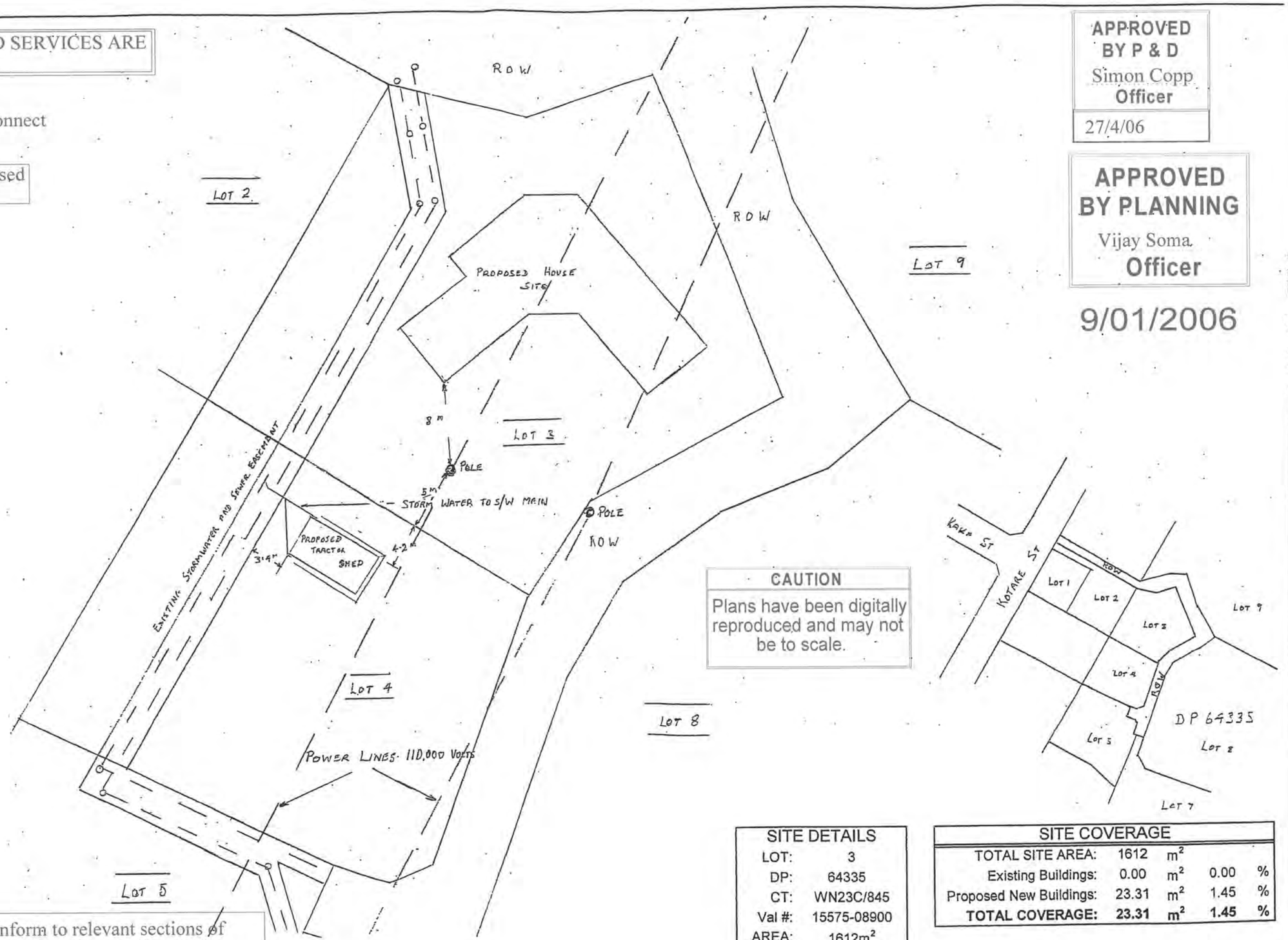

CAUTION
Plans have been digitally reproduced and may not be to scale.

SITE DETAILS	
LOT:	3
DP:	64335
CT:	WN23C/845
Val #:	15575-08900
AREA:	1612m²
ZONING:	*RESIDENTIAL*

SITE COVERAGE				
TOTAL SITE AREA:	1612	m²		
Existing Buildings:	0.00	m²	0.00	%
Proposed New Buildings:	23.31	m²	1.45	%
TOTAL COVERAGE:	**23.31**	**m²**	**1.45**	**%**

All work must be carried out to conform to relevant sections of The New Zealand Building Code and New Zealand Standards, particularly NZS.3604:1999 For Light Timber Framed construction.

TOTALSPAN STEEL BUILDINGS
THE SMARTER WAY TO BUILD

Drawings Prepared By:
TOTALSPAN WELLINGTON
PO Box 22109 Ph (04) 972 2658
WELLINGTON Fax (04) 939 3734
e-mail: wellington@totalspan.co.nz

Proposed Building For:
Mr WARD
35D KOTARE STREET
WAIKANAE
KAPITI

Site Address:
35C KOTARE STREET
WAIKANAE
KAPITI

SITE PLAN

Date Drawn: 21-Dec-05
Order #: 512161

FOR. C.O.C. → ANDREW.

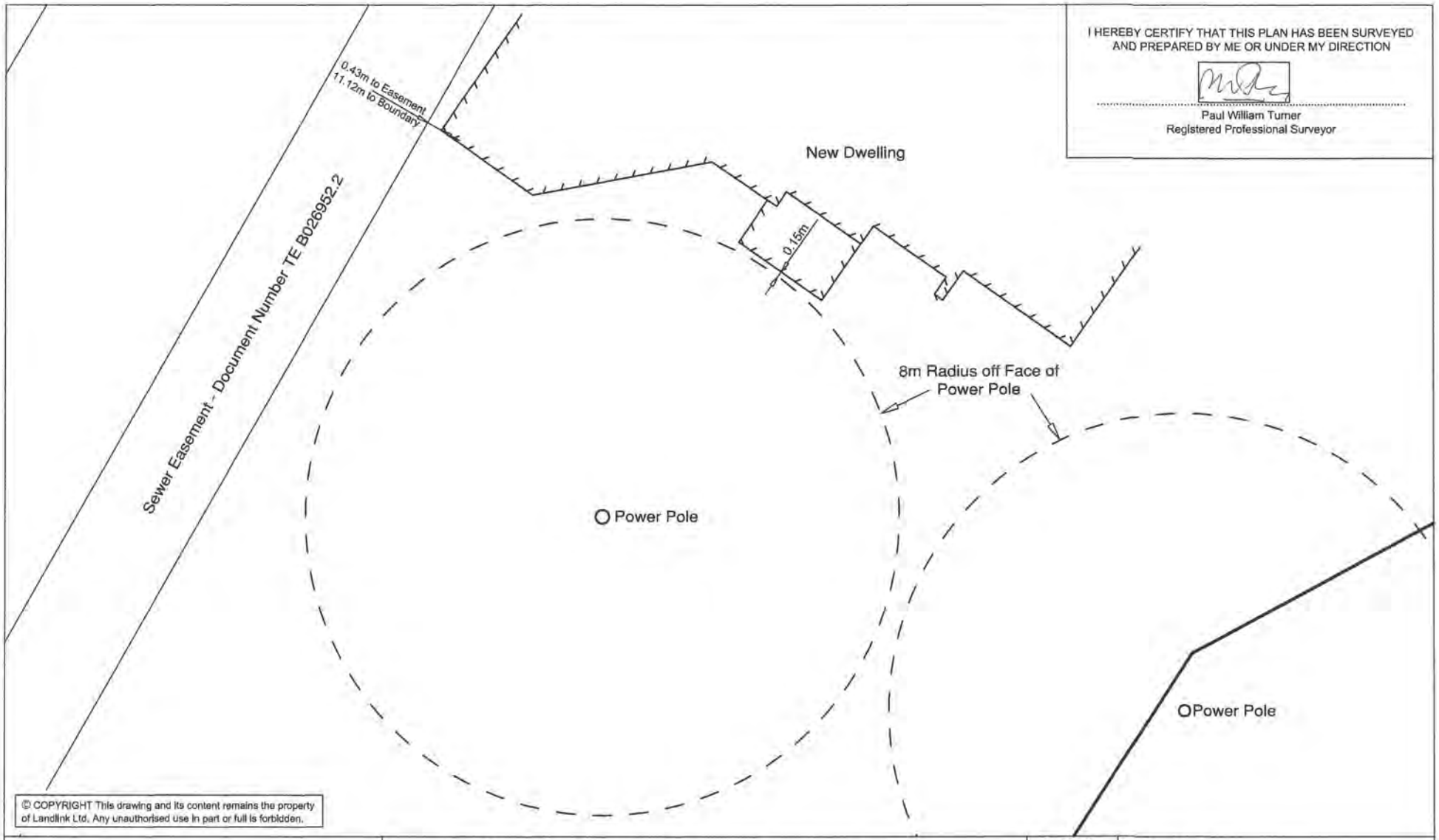

I HEREBY CERTIFY THAT THIS PLAN HAS BEEN SURVEYED AND PREPARED BY ME OR UNDER MY DIRECTION

Paul William Turner
Registered Professional Surveyor

© COPYRIGHT This drawing and its content remains the property of Landlink Ltd. Any unauthorised use in part or full is forbidden.

Landlink
positive planning + durable design
Mahara House - 3 Ngaio Road - P.O.Box 370 - Waikanae 5250
www.landlink.co.nz ~ contactus@landlink.co.nz ~ P 04 902-6161

Plan Showing New Dwelling and Relationship to Sewer Easment and PowerPole on Lot 1 DP 409453

Tony Ward
35B Kotare Street, Waikanae

REVISION	A - Original Issue		
SURVEYED	AR	DATE 5 February 2013	
DESIGNED		Scale (A3) 1:100 Original Plan A3	
DRAWN	AR		
CHECKED	PT	DRAWING NO. 1039.5	ISSUE A
APPROVED			

04 293 7203
027 551 4443

preline plumbing inspection required.

BC 110397

frost prone water pipes are to be lagged with a suitable type of insulation.

all work must be carried out to conform to the relevant sections of The New Zealand Building Code and New Zealand Standards, particularly NZS3604:1999 for light timber framed construction.

TIMBER TREATMENT
exterior wall framing MSG 8, H1.2
interior wall framing MSG 8, H1.1
roof framing MSG 8, H3.1

BOTTOM PLATE FIXING:
10mm dia. cast in @ max 900 crs
12mm dia. cast in @ max 1400 crs
approved anchors (fixed to manufacturers instructions.) Ramset AS12150H anchours for connections with 15kN requirements

ELEVATIONS

TOP PLATE FIXING:
where walls are supporting trusses the top plate must be fixed to the supporting member (e.g. studs and lintels) as per table 8.18 NZS3604:1999

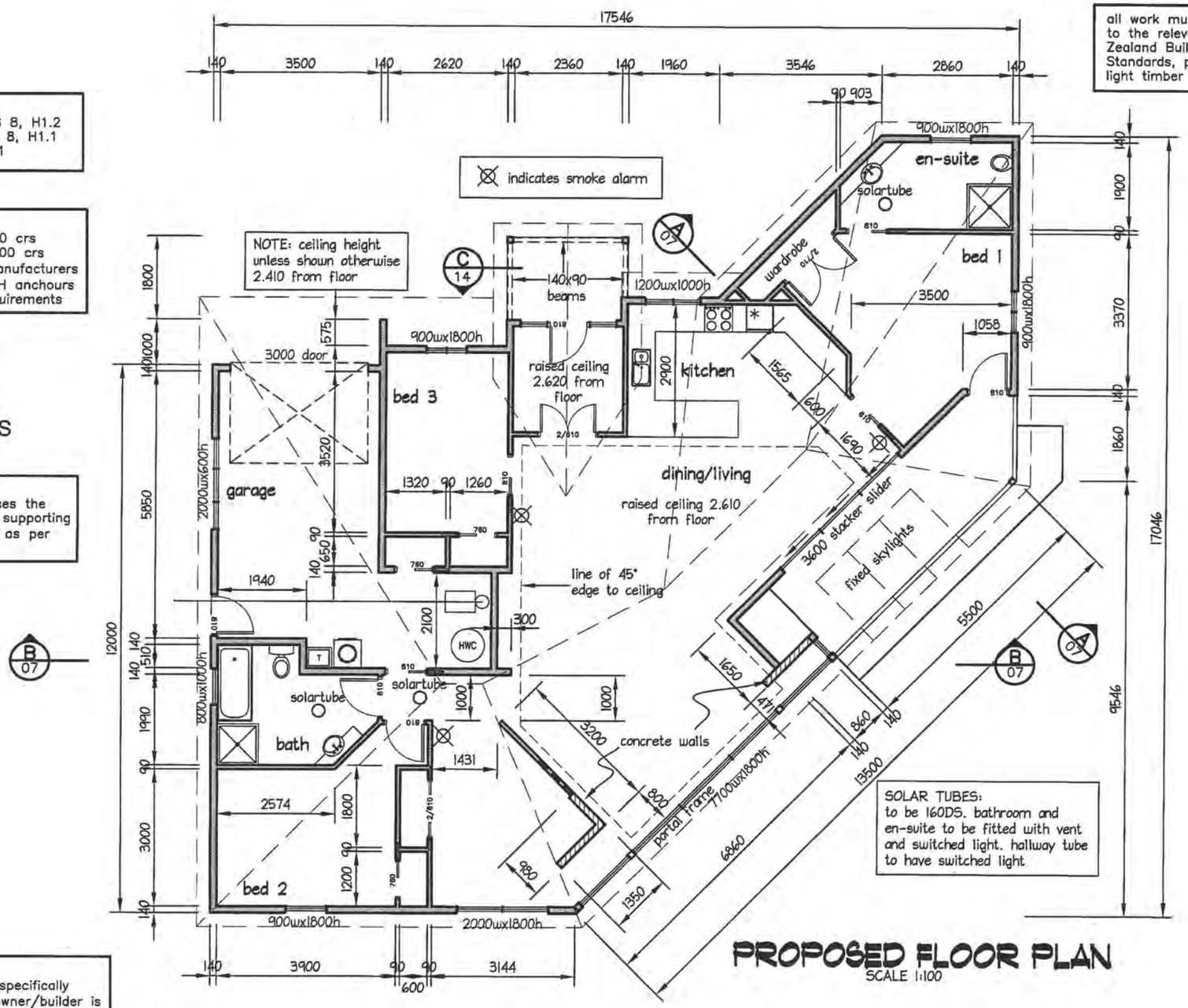

SOLAR TUBES:
to be 160DS. bathroom and en-suite to be fitted with vent and switched light. hallway tube to have switched light

PROPOSED FLOOR PLAN
SCALE 1:100

ENGINEERS DESIGN:
this project contains elements specifically designed by an engineer. the owner/builder is required to ensure the engineer inspects the work and provides the local body with written evidence of the inspection.

the contractor shall check and verify dimensions before construction

designscape
shark ball ltd
Civil, Structural and Building design
http://www.designscape.net.nz
email info@designscape.net.nz

Allan Pullenger AIPENZ CertETn
298 Rosetta Road
sunny Raumati

phone & fax 04 902 8528
Mob 027 442-0486

WARD HOUSE
35B KOTARE ST-WAIKANAE
PROPOSED DWELLING

scale	1:100
date	June 2011
drawn	Stuart Jackson
designed	Allan Pullenger

plan number
2690-01
Sheet 05 of 21

00005

Producer Statement

Piped Services
&
Sanitary Plumbing Stacks

Construction Review

Issued by Andy Magee **Registration Number** 11601

To Kapiti Coast District Council

In respect to the following

Piped Services installed in accordance with G12/AS1 as shown on the approved plans or as per the attached amended plan and Sanitary Plumbing Stacks installed in accordance with G13/AS1 or AS/NZS 3500.2.2

Installed at 35B Kotare St, Waikanae

Building Consent No. 110397

As a Craftsman plumber, currently holding an annual practicing license, certify that I, or personnel under my control, have carried out the installation of the above system and I believe on reasonable grounds that the installation complies with the New Zealand Building Code. Both hot and cold systems have been pressure tested for a period of 15 minutes at a pressure of 1500 kPa.

Name A. Magee **Signed** [signature] **Date** 24/5/12

KCDC Office use only

Producer Statement author authenticated and current registration verified

Verification & Registration checked: https://www2.pgdb.co.nz/PGDB/PublicRegister

Date.....

Name.....

Signature.....

Validity authenticated in accordance with KCDC Policy 002

21 NOV 2012

Signature: [signature]

Producer Statement

Private Sewer Drains

Construction Review

Issued by..David Hodges... Registration Number..16176.....

To Kapiti Coast District Council

In respect to the following

Private Sewer Drains installed in accordance with G13 AS2 or AS/NZS 3500 .2.2 as shown on the approved plans or as per the attached amended plan

Installed at...35 B.....Kotare ST.....Waikanae.....

Building Consent No.110397.....
As a registered drainlayer, currently holding an annual practicing license, certify that I, or personnel under my control, have carried out the installation of the above system and I believe on reasonable grounds that the installation complies with the New Zealand Building Code.

Name.David Hodges.Signature..[signature].....Date..3-3-12....

Note: ***Fully dimensioned as built drain plan to be supplied.(scale 1:100)***

Drains may be laid and backfilled without inspection provided that the drain is left under test with a min of 1.0 m head and the inspection at the lateral left exposed.

KCDC Office use only

Producer Statement author authenticated and current registration verified

Verification & Registration checked: https://www2.pgdb.co.nz/PGDB/PublicRegister

Authenticated in accordance with KCDC Policy 002

Date.....

21 NOV 2012

Name.....

Signature.....

Signature: [signature]

Producer Statement

Stormwater Drains

Construction Review

Issued by. David Hodges Registration Number. 16176

To Kapiti Coast District Council

In respect to the following

Stormwater Drains installed in accordance with E1 AS1 as shown on the approved plans or as per the attached amended plan

Installed at. 35 B Kotare ST Waikanae

Building Consent No. 110397

As a registered drainlayer, currently holding an annual practicing license, certify that I, or personnel under my control, have carried out the installation of the above system and I believe on reasonable grounds that the installation complies with the New Zealand Building Code.

Signed. ..... Date. 3-3-12

Note: Fully dimensioned as built drain plan to be supplied. (scale 1:100)

Verify submitted in accordance with KCDC Policy 002

21 NOV 2012

Signature:

KAPITI COAST
DISTRICT COUNCIL

SCOPE OF INSPECTION SHEET

Date 2-3-2012 SR or BCA 110397 Inspection No. 9

Time ..... Documents on site YES / NO

Owner Name ..... Project Description New dwg

Site Address 35b Kotare St

Building Plumbing

Circle appropriate Type & Inspection Other .....

Site Found Piles PreSlab Subfloor Drainage PreWrap PreClad Weathertight PreLine PostLine Block Brick Ret.Wall Final

Engineer Supervision Yes No n/a – Name .....

Notes * Recheck
* all 4 items have now been completed as requested at previous preline.
* have received new brace plan from engineer.

Diagram (if necessary)

Photo's Taken – Nos. ..... saved / scanned? Y / N

Site instruction issued .....

Result: **Pass** **Part pass** **Fail**

Confirmation of inspection by person on site

Person on site: Builder ☑ Owner ☐ Other ☐ ..... No One on site ☐

Your next inspection will be .....
(Guidance notes for inspection on the rear of this sheet)

Agreed, CRAIG GLOAG (Print Name) Sign ..... Date 2.3.2012

Officer Name Andrew Sign ..... Date 2.3.2012

Additional Insp. Sheet No. .....

Information entered into data base ☐ ***Initial*** ..... ***Date*** ..../..../....

Form 242

SCOPE OF INSPECTION

Inspections are made in conjunction with, and with the cooperation of, the owner/owner's agent to ensure that the building work complies with the provisions of the Building Act and NZ Building Code. The inspection is general in nature and involves an audit of the following aspects:

Engineer – Civil/Structural/Fire/Geotechnical: An engineer has been engaged to carry out inspections on behalf of the owner. Please ensure those inspections are carried out. A Certificate of Expert Opinion is required to be supplied to Council.

Site: A surveyor's report, or visible boundary markers provided, so that the set out of the project can be clearly identified.

Foundation: When all formwork has been completed, footings have been excavated and reinforcement is in place.

Piles: When all holes are excavated prior to installation.

Pre-slab plumbing (concrete slab): When all plumbing and drainage pipes have been installed, prior to backfilling.

Pre-slab building (concrete slab): When DPM has been placed with all laps and penetrations sealed, reinforcing in place and in position with chairs as appropriate.

Sub-floor (timber suspended floor): When all sub-floor connections, joists and required blocking, and any suspended plumbing pipe work have been completed, but before any flooring or base boards have been fitted. Relocated dwellings require a sub-floor inspection prior to the base boards being fitted.

Drainage: When all drainage works is completed and is under test, before backfilling occurs. As laid drainage plan is required at time of inspection.

Pre-wrap: When all roof and wall framing is complete, including any exterior sheet bracing, but before building wrap has been installed.

Pre-clad: When building wrap and window and door flexible flashing tape has been installed, cavity battens (cavity systems), cavity closers and all flashing systems are in place, but before joinery has been installed.

Weathertightness: When exterior cladding has been installed, flashings in place, air seals fitted to openings, but before any coating system have been applied.

Pre-line (plumbing): When all internal plumbing is complete and plumbing pipe work is under test pressure.

Pre-line (building): When the exterior of the building is weather tight, all structural components (including bracing) have been completed and wall insulation is in place.

Wet area membranes, decks, roofs and shower area: Pre application of wet area membrane, when all outlets and flashings have been installed, ready for membrane installation.
Post application of wet area membrane.

Post-line: When all interior linings have been installed, but before skirting, Scotia or plastering stopping. Installation details of screws check of wall bracing element.

Block: When all masonry block work including block foundations for slab floors, is completed, reinforcing in place and washout openings in place.

Brick Veneer: When veneer is at half height and all flashings are in place.

Retaining wall: Pre application of waterproof membrane system.
Post application of waterproof membrane system.
Protection installed for membrane system and installation of perforated drainage system before back filling.

Final: Final inspections are carried out at the completion of the project and may include entire project, plumbing, drainage and storm water. The Code Compliance Certificate is issued if the building work complies with the approved building consent.

Free Standing Fireplace: Final inspection required only.

In Built Fireplace: Inspection required before installation **and** after installation.

PRIVACY STATEMENT

1. The information contained on the Building Inspection Report Sheet is held by the Kapiti Coast District Council, whose address is Private Bag 601, Paraparaumu.
2. The information is available for public inspection as part of the Building Record of the property concerned.
3. You have the right under the Privacy Act 1993 to obtain access to, and to request correction of any personal information held by Council concerning you.

Council has a Privacy Officer. If you have any concerns regarding privacy issues please telephone (04) 296 4700

KAPITI COAST DISTRICT COUNCIL

WEATHERTIGHTNESS / PRELINE / POSTLINE

Date 23.10.2 **SR or BCA** 110797 **Inspection No.** 1

Time **Documents on site YES / NO**

Owner Name **Project Description** New dw

Site Address 35 Kalmic St

All inspections are carried out with strict reference to the building consent granted.

P = Pass F = Fail NA = Non-Applicable

Inspection decisions are based on the extent of work inspected at the time of inspection.

Please refer to the related scope sheet for definition of the inspections extent.

Applies to all inspections

Sighted previous inspection notes	Y	N	NA	Conforms with approved drawings	Y	N	NA	Confirm Additional information/amended plan	Y	N	NA

WEATHERTIGHTNESS

Cladding selection complies with BC?	P	F	NA	Roof material complies with BC?	P	F	NA	Sheets fixed to manufacturers	P	F	NA
Roof fixing complies	P	F	NA	Fixings appropriate for durability?	P	F	NA	Sheet layout	P	F	NA
Ridge/hip flashings in place	P	F	NA	Roof/wall junctions flashed	P	F	NA	Control joints where appropriate	P	F	NA
Penetrations correctly flashed	P	F	NA	Fixings appropriate for bracing elements	P	F	NA	Flashings in place	P	F	NA
Clearance provided for fascia & spouting	P	F	NA	Ground clearances achieved	P	F	NA	Clearance off deck surface	P	F	NA
Flashings/wraps in place, parapets/barriers	P	F	NA	Glazing – human impact	P	F	NA	Truss/Rafter fixings	P	F	NA

PRELINE

Max moisture Content .....%	P	F	NA	Insulation R Value	P	F	NA	Bracing connections	P	F	NA
Ventilation to rooms	P	F	NA	Top plate connection	P	F	NA	Air seals	P	F	NA
Timber treatment	P	F	NA	Ceiling batten spacing	P	F	NA	Bottom plate fixings	P	F	NA
Lintel/beam size & fixing	P	F	NA	Stud spacing	P	F	NA		P	F	NA
Plumber Name				TPR line	P	F	NA	Waste pipe size & test	P	F	NA
Soil pipe size and test	P	F	NA	Inbuilt S/W pipes tested	P	F	NA	Floor wastes	P	F	NA
Pipes fixed/supported	P	F	NA	Vents terminated	P	F	NA	Shut off valves	P	F	NA
System: AS3500, G13, Other	P	F	NA	Pressure Test	P	F	NA	Fire wraps and collars	P	F	NA

POSTLINE

Sheet bracing	P	F	NA	Wet area substrate system	P	F	NA	Sheet fixings	P	F	NA
Penetrations sleeved	P	F	NA		P	F	NA	Fire/Acoustic separation	P	F	NA

Officer Name: Andrew **Officer Sign:** **Date:** 2/3/2012

Form 242e

KAPITI COAST
DISTRICT COUNCIL

SCOPE OF INSPECTION SHEET

Date 23.2.2012 SR or BCA 110397 Inspection No. 8

Time ..... Documents on site YES / NO

Owner Name ..... Project Description New dwg

Site Address 35 B Kotare St

Building Plumbing

Circle appropriate Type & Inspection Other .....

Site Found Piles PreSlab Subfloor Drainage PreWrap PreClad Weathertight PreLine PostLine Block Brick Ret.Wall Final

Engineer Supervision Yes No n/a – Name .....

Notes: * m/c 16-19
* batts to walls and ceiling, including all 4 walls of garage
* ceiling battens 70x35 @ 600 centres.
* items from pre wrap have been completed.
* PEF rods placed - to place foam.

Diagram (if necessary)

Photo's Taken – Nos. ..... saved / scanned? Y / N

Site instruction issued * metal corners to be placed to wet area showers x2
* confirmation from engineer regarding BL 900 brace to ensuite, weather it can be deleted. And 2 BL 600 at front entrance can be changed to 1 BL 450.
* x2 handi bracs
* move flush box's to brace elements.

Result: **Pass** **Part pass** **Fail**

Confirmation of inspection by person on site

Person on site: Builder ☑ Owner ☐ Other ☐ ..... No One on site ☐

Your next inspection will be Recheck.
(Guidance notes for inspection on the rear of this sheet)

Agreed, Bryan Sweetman (Print Name) Sign ..... Date 23/2/2012

Officer Name Andrew Sign ..... Date 23/2/2012

Additional Insp. Sheet No. .....

Information entered into data base ☐ ***Initial*** ..... ***Date*** ..../..../....

Form 242

KAPITI COAST DISTRICT COUNCIL

WEATHERTIGHTNESS / PRELINE / POSTLINE

Date 23.2.2012 **SR or BCA** 110397 **Inspection No.** 8

Time ..... **Documents on site YES / NO**

Owner Name ..... **Project Description** New dwg

Site Address 35 a Kalea St

All inspections are carried out with strict reference to the building consent granted.

P = Pass F = Fail NA = Non-Applicable

Inspection decisions are based on the extent of work inspected at the time of inspection.

Please refer to the related scope sheet for definition of the inspections extent.

Applies to all inspections

Sighted previous inspection notes	Y	N	NA	Conforms with approved drawings	Y	N	NA	Confirm Additional information/amended plan	Y	N	NA

WEATHERTIGHTNESS

Cladding selection complies with BC?	P	F	NA	Roof material complies with BC?	P	F	NA	Sheets fixed to manufacturers	P	F	NA
Roof fixing complies	P	F	NA	Fixings appropriate for durability?	P	F	NA	Sheet layout	P	F	NA
Ridge/hip flashings in place	P	F	NA	Roof/wall junctions flashed	P	F	NA	Control joints where appropriate	P	F	NA
Penetrations correctly flashed	P	F	NA	Fixings appropriate for bracing elements	P	F	NA	Flashings in place	P	F	NA
Clearance provided for fascia & spouting	P	F	NA	Ground clearances achieved	P	F	NA	Clearance off deck surface	P	F	NA
Flashings/wraps in place, parapets/barriers	P	F	NA	Glazing – human impact	P	F	NA	Truss/Rafter fixings	P	F	NA

PRELINE

Max moisture Content 16.1%	P	F	NA	Insulation R Value R5.00 R2.6+R1	P	F	NA	Bracing connections	P	F	NA
Ventilation to rooms	P	F	NA	Top plate connection	P	F	NA	Air seals	P	F	NA
Timber treatment	P	F	NA	Ceiling batten spacing	P	F	NA	Bottom plate fixings	P	F	NA
Lintel/beam size & fixing	P	F	NA	Stud spacing	P	F	NA		P	F	NA
Plumber Name				TPR line	P	F	NA	Waste pipe size & test	P	F	NA
Soil pipe size and test	P	F	NA	Inbuilt S/W pipes tested	P	F	NA	Floor wastes	P	F	NA
Pipes fixed/supported	P	F	NA	Vents terminated	P	F	NA	Shut off valves	P	F	NA
System: AS3500, G13, Other	P	F	NA	Pressure Test	P	F	NA	Fire wraps and collars	P	F	NA

POSTLINE

Sheet bracing	P	F	NA	Wet area substrate system	P	F	NA	Sheet fixings	P	F	NA
Penetrations sleeved	P	F	NA		P	F	NA	Fire/Acoustic separation	P	F	NA

Officer Name: Andrew **Officer Sign:** **Date:** 23/2/2012

Form 242e

KAPITI COAST
DISTRICT COUNCIL

SCOPE OF INSPECTION SHEET

Date 25-2-2013 SR or BCA 110397 Inspection No.

Time Documents on site YES / NO

Owner Name Project Description New dwg.

Site Address 35B Kotare St. Restricted Building Work YES / NO

Building Plumbing Circle appropriate Type & Inspection Other

Site Found Piles PreSlab Subfloor Drainage PreWrap PreClad Weathertight PreLine PostLine Block Brick Ret.Wall Final

Engineer Supervision Yes No n/a – Name

Diagram (if necessary)

Notes

* as built dwelling plan has been provided from Landlink showing dwelling is outside of easement.

* ok to issue CC.

Photo's Taken – Nos. saved / scanned? Y / N

Site instruction issued

Confirmation of person on site Result: Pass **Part pass** **Fail**

Name LBP No.

Your next inspection will be
(Guidance notes for inspection on the rear of this sheet)

Agreed, (Print Name) Sign

Officer Name Andrew Sign

Information entered into data base ☐ **Initial** **Date** / /

Form 242

KAPITI COAST DISTRICT COUNCIL

FINAL INSPECTION

Date 25 2 2013 SR or BCA 110397 Inspection No. .....

Time ..... Documents on site YES / NO

Owner Name ..... Project Description NIW dwg.

Site Address 356 Kotare St.

All inspections are carried out with strict reference to the building consent granted.

P = Pass F = Fail NA = Non-Applicable

Inspection decisions are based on the extent of work inspected at the time of inspection.

Please refer to the related scope sheet for definition of the inspections extent.

Applicable to all inspections

Sighted previous inspection notes	Y	N	NA	Conforms with approved drawings	Y	N	NA	Confirm Additional information/amended plan	Y	N	NA

FINAL – Exterior

Sub-floor ventilation	P	F	NA	Roof fixings	P	F	NA	Spouting + Down-pipes	P	F	NA
Deck Structure	P	F	NA	Flashings – Roof	P	F	NA	Penetrations – Flashings	P	F	NA
Barriers	P	F	NA	Gully Dishes	P	F	NA	Storm-water + site drainage	P	F	NA
Handrails	P	F	NA	Wastes to gully	P	F	NA	Fixings – Durability	P	F	NA
Steps/Stairs	P	F	NA	Terminal vents/AAV's	P	F	NA	Cladding painted/sealed	P	F	NA
Flashings – Windows/Doors	P	F	NA	Cladding Ground Clearance	P	F	NA		P	F	NA

FINAL – Interior

Service areas – floors/walls	P	F	NA	Food storage/preparation	P	F	NA	Hot water temp	P	F	NA
Stair design	P	F	NA	Ventilation	P	F	NA	Solid fuel heater	P	F	NA
Handrails	P	F	NA	Insulation + clearance	P	F	NA	Water supply tank	P	F	NA
Balustrades	P	F	NA	HWC flues	P	F	NA	Trap seals + AAV's	P	F	NA
Lightings	P	F	NA	HWC valves	P	F	NA	Cistern flushing	P	F	NA
Laundering	P	F	NA	HWC restraint	P	F	NA	WC pan connection	P	F	NA
Cooking facilities	P	F	NA	Tempering valve	P	F	NA	Septic tank	P	F	NA
Smoke detectors	P	F	NA	Glazing – Human Impact	P	F	NA	Window labels	P	F	NA

FINAL – Intertenancy/Commercial

Fire/Life systems sighted	P	F	NA	Guarantees/Warranties/ Certificates/ Expert Opinion	P	F	NA	Intertenancy STC	P	F	NA

All Inspections

Road Crossing Complete	P	F	NA	Energy Certificates supplied	P	F	NA	Final Check Complete	Y	N	

Name: Andrew Officer Sign: A. H Date: 25/2/2013

Form 242j

KAPITI COAST
DISTRICT COUNCIL

Action Number 0317

FILE NOTE
Consents & Compliance Division

FILE NUMBER: 110397

OFFICER: Andrew

DATE: 17-1-2012

SUBJECT: Final recheck

* spoke with Russell regarding site inspection
* Russell agreed that confirmation and new as built site plan and note is required for repositioning of dwelling from a surveyor.
* Rang Tony 17-1-13 @ 2:47 confirming that above note is required.

Signature: [signature]

KAPITI COAST
DISTRICT COUNCIL

SCOPE OF INSPECTION SHEET

Date 17-1-2013 SR or BCA 110397 Inspection No. 15

Time ..... Documents on site YES / NO

Owner Name ..... Project Description .....

Site Address 35B Kotare St Restricted Building Work YES / NO

Building Plumbing Circle appropriate Type & Inspection Other .....

Site Found Piles PreSlab Subfloor Drainage PreWrap PreClad Weathertight PreLine PostLine Block Brick Ret.Wall Final

Engineer Supervision Yes No n/a – Name .....

Notes * Recheck
* items 1, 2, 3 + 4 have been rectified
* dwelling measurements to boundary / easement have changed from approved plan.

Diagram (if necessary)

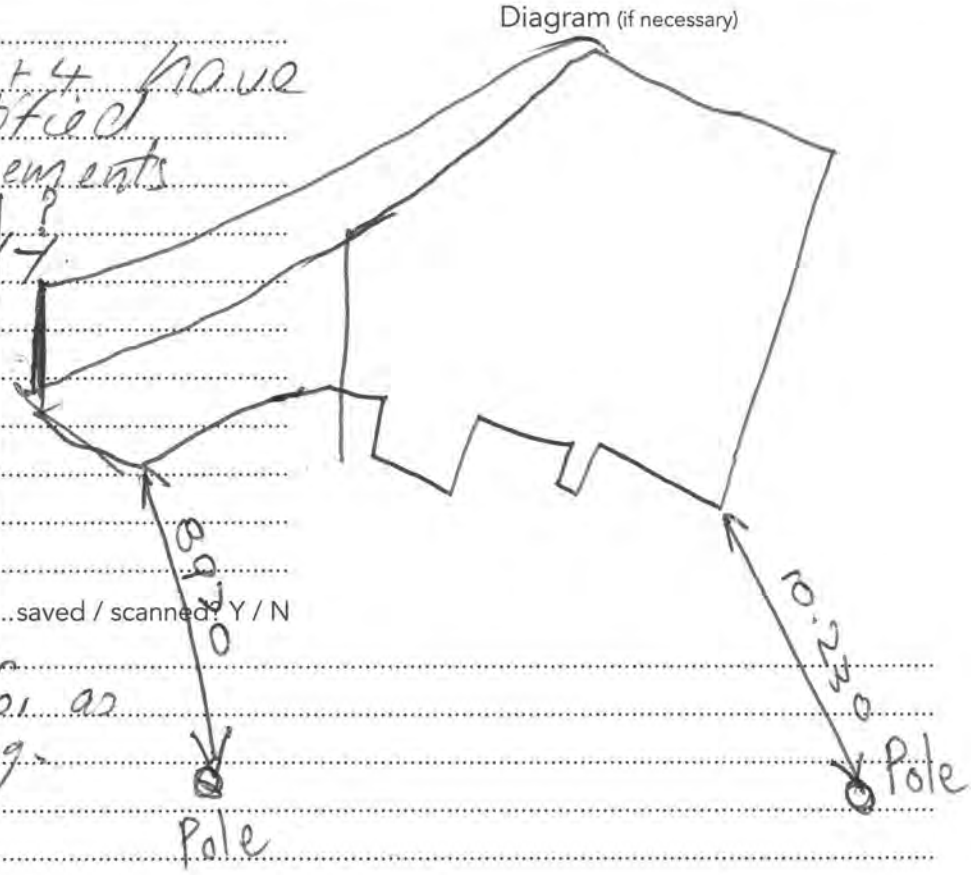

Photo's Taken – Nos. ..... saved / scanned Y / N

Site instruction issued
1. Survey report for as built of dwelling.

Confirmation of person on site Result: **Pass** **Part pass** **Fail**

Name LBP No.

Your next inspection will be .....
(Guidance notes for inspection on the rear of this sheet)

Agreed, OJ Ward (Print Name) Sign .....

Officer Name Andrew Sign .....

Information entered into data base ☐ **Initial** ..... **Date** ..../..../....

Form 242

KAPITI COAST DISTRICT COUNCIL

FINAL INSPECTION

Date 17 1 2013 SR or BCA 110397 Inspection No. 15

Time ..... Documents on site YES / NO

Owner Name ..... Project Description .....

Site Address 352 Kotare St

All inspections are carried out with strict reference to the building consent granted.

P = Pass F = Fail NA = Non-Applicable

Inspection decisions are based on the extent of work inspected at the time of inspection.

Please refer to the related scope sheet for definition of the inspections extent.

Applicable to all inspections

Sighted previous inspection notes	Y	N	NA	Conforms with approved drawings	Y	N	NA	Confirm Additional information/amended plan	Y	N	NA

FINAL – Exterior

Sub-floor ventilation	P	F	NA	Roof fixings	P	F	NA	Spouting + Down-pipes	P	F	NA
Deck Structure	P	F	NA	Flashings – Roof	P	F	NA	Penetrations – Flashings	P	F	NA
Barriers	P	F	NA	Gully Dishes	P	F	NA	Storm-water + site drainage	P	F	NA
Handrails	P	F	NA	Wastes to gully	P	F	NA	Fixings – Durability	P	F	NA
Steps/Stairs	P	F	NA	Terminal vents/AAV's	P	F	NA	Cladding painted/sealed	P	F	NA
Flashings – Windows/Doors	P	F	NA	Cladding Ground Clearance	P	F	NA		P	F	NA

FINAL – Interior

Service areas – floors/walls	P	F	NA	Food storage/preparation	P	F	NA	Hot water temp	P	F	NA
Stair design	P	F	NA	Ventilation	P	F	NA	Solid fuel heater	P	F	NA
Handrails	P	F	NA	Insulation + clearance	P	F	NA	Water supply tank	P	F	NA
Balustrades	P	F	NA	HWC flues	P	F	NA	Trap seals + AAV's	P	F	NA
Lightings	P	F	NA	HWC valves	P	F	NA	Cistern flushing	P	F	NA
Laundering	P	F	NA	HWC restraint	P	F	NA	WC pan connection	P	F	NA
Cooking facilities	P	F	NA	Tempering valve	P	F	NA	Septic tank	P	F	NA
Smoke detectors	P	F	NA	Glazing – Human Impact	P	F	NA	Window labels	P	F	NA

FINAL – Intertenancy/Commercial

Fire/Life systems sighted	P	F	NA	Guarantees/Warranties/ Certificates/ Expert Opinion	P	F	NA	Intertenancy STC	P	F	NA

All Inspections

Road Crossing Complete	P	F	NA	Energy Certificates supplied	P	F	NA	Final Check Complete	Y	N	

Name: Andrew Officer Sign: ..... Date: 17/1/2013

Form 242j

KAPITI COAST
DISTRICT COUNCIL

SCOPE OF INSPECTION SHEET

Date 21-11-2012 SR or BCA 110397 Inspection No. 14

Time ..... Documents on site YES / NO

Owner Name ..... Project Description New dwg + garage.

Site Address 35B Kotare St Restricted Building Work YES / NO

Building Plumbing Circle appropriate Type & Inspection Other .....

Site Found Piles PreSlab Subfloor Drainage PreWrap PreClad Weathertight PreLine PostLine Block Brick Ret.Wall Final

Engineer Supervision Yes No n/a – Name .....

Notes * garage complete, thermal breaks between wrap and steel frames. braces and connections of frames and portals placed.
* dwelling complete
* 2 existing 10,000 litre water tanks
* skylights placed
* recycled rain water to toilets and ext taps.

Diagram (if necessary)

Photo's Taken – Nos. ..... saved / scanned? Y / N

Site instruction issued (1) amended retaining wall plan and PS4 + site notes (2) external elec signage (3) non potable sign. to external taps. (4) under floor heating warranty (5) survey report as inspection 2.

Confirmation of person on site Result: **Pass** **Part pass** **Fail**

Name LBP No.

NW

Your next inspection will be Recheck
(Guidance notes for inspection on the rear of this sheet)

Agreed, agreed (Print Name) Sign agreed

Officer Name Andrew Sign A.W.

Information entered into data base ☐ **Initial** ..... **Date** ..../..../....

Form 242

KAPITI COAST DISTRICT COUNCIL

FINAL INSPECTION

Date 21-11-2012 SR or BCA 110597 Inspection No. 14

Time ..... Documents on site YES / NO

Owner Name ..... Project Description New dwg + garage

Site Address 352 Kakariki St

All inspections are carried out with strict reference to the building consent granted.

P = Pass F = Fail NA = Non-Applicable

Inspection decisions are based on the extent of work inspected at the time of inspection.

Please refer to the related scope sheet for definition of the inspections extent.

Applicable to all inspections

Sighted previous inspection notes	Y	N	NA	Conforms with approved drawings	Y	N	NA	Confirm Additional information/amended plan	Y	N	NA

FINAL – Exterior

Sub-floor ventilation	P	F	NA	Roof fixings	P	F	NA	Spouting + Down-pipes	P	F	NA
Deck Structure	P	F	NA	Flashings – Roof	P	F	NA	Penetrations – Flashings	P	F	NA
Barriers	P	F	NA	Gully Dishes	P	F	NA	Storm-water + site drainage	P	F	NA
Handrails	P	F	NA	Wastes to gully	P	F	NA	Fixings – Durability	P	F	NA
Steps/Stairs	P	F	NA	Terminal vents/AAV's	P	F	NA	Cladding painted/sealed	P	F	NA
Flashings – Windows/Doors	P	F	NA	Cladding Ground Clearance	P	F	NA		P	F	NA

FINAL – Interior

Service areas – floors/walls	P	F	NA	Food storage/preparation	P	F	NA	Hot water temp 47°	P	F	NA
Stair design	P	F	NA	Ventilation	P	F	NA	Solid fuel heater	P	F	NA
Handrails	P	F	NA	Insulation + clearance	P	F	NA	Water supply tank	P	F	NA
Balustrades	P	F	NA	HWC flues	P	F	NA	Trap seals + AAV's	P	F	NA
Lightings	P	F	NA	HWC valves	P	F	NA	Cistern flushing	P	F	NA
Laundering	P	F	NA	HWC restraint	P	F	NA	WC pan connection	P	F	NA
Cooking facilities	P	F	NA	Tempering valve	P	F	NA	Septic tank	P	F	NA
Smoke detectors	P	F	NA	Glazing – Human Impact	P	F	NA	Window labels	P	F	NA

FINAL – Intertenancy/Commercial

Fire/Life systems sighted	P	F	NA	Guarantees/Warranties/ Certificates/ Expert Opinion	P	F	NA	Intertenancy STC	P	F	NA

All Inspections

Road Crossing Complete	P	F	NA	Energy Certificates supplied	P	F	NA	Final Check Complete	Y	N	

Name: Andrew Officer Sign: [signature] Date: 21/11/2012

Form 242j

KAPITI COAST
DISTRICT COUNCIL

SCOPE OF INSPECTION SHEET

Date 12/6/12 SR or BCA 110397 Inspection No. 13

Time 3.30 Documents on site YES / NO

Owner Name WARD Project Description GARAGE

Site Address 35B KOTARE ST

Building Plumbing Circle appropriate Type & Inspection Other

Site Found Piles PreSlab Subfloor Drainage PreWrap PreClad Weathertight PreLine PostLine Block Brick Ret.Wall Final

Engineer Supervision Yes No n/a – Name

Diagram (if necessary)

Notes

16mm BOTTOM RODS.
668 MESH
ALL TIES / BAR CHAIRS
VAPOUR BARRIER

Photo's Taken – Nos. saved / scanned? Y / N

Site instruction issued

OK TO POUR

Result: **Pass** **Part pass** **Fail**

Confirmation of inspection by person on site

Person on site: Builder ☐ Owner ☐ Other ☐ No One on site ☐

Your next inspection will be
(Guidance notes for inspection on the rear of this sheet)

Agreed (Print Name) Sign Date / /

Officer Name Sign Date 12/6/12

Additional Insp. Sheet No.

Information entered into data base ☐ ***Initial*** ***Date*** / /

Form 242

KAPITI COAST DISTRICT COUNCIL

SITE / FOUNDATIONS / PILES / PRE SLAB / SUBFLOOR / DRAINAGE

Date 12/6/12 SR or BCA 116597 Inspection No. 15

Time 3.30 Documents on site YES / NO

Owner Name WARD Project Description GARAGE

Site Address 35 B KOTARE ST

All inspections are carried out with strict reference to the building consent granted.

P = Pass F = Fail NA = Non-Applicable

Inspection decisions are based on the extent of work inspected at the time of inspection.

Please refer to the related scope sheet for definition of the inspections extent.

SITE

Conforms with approved drawings	Y	N	NA	Checked driveway	Y	N	NA	Engineer supervision required	Y	N	NA
Scope of Resource consent granted?	Y	N	NA	Checked position off relevant boundaries and datum height	Y	N	NA		Y	N	NA
Expert Opinion (Producer statement) required	Y	N	NA	Name of Surveyor Company				Name of Engineer Company			

FOUNDATIONS				PILES				SUBFLOOR			
Footing Depth	P	F	NA	Pile size	P	F	NA	Pile/Bearer/Joist Fixings	P	F	NA
Good bearing (NZS 3604)	P	F	NA	Pile layout is to plan	P	F	NA	Notching, Holes, etc	P	F	NA
Reinforcing	P	F	NA	Special piles - point load	P	F	NA	Solid Blocking	P	F	NA
Siting	P	F	NA	Timber Treatment	P	F	NA	Joists	P	F	NA
Sub-floor vents	P	F	NA	Hole depth	P	F	NA	Beams/Bearers	P	F	NA

PRE SLAB

Rebate for brick veneer	P	F	NA	Sand blinding	P	F	NA	Steel reinforcing	P	F	NA
Ground clearance	P	F	NA	Slab thickenings	P	F	NA	Bar chairs	P	F	NA
Concrete Cover	P	F	NA	Vapour barrier (DPC)	P	F	NA	DPC penetrations taped	P	F	NA
Driveway s/w control	P	F	NA	Bottom plate fixings	P	F	NA	Minimum Floor Level	P	F	NA
Secondary flow path	P	F	NA	TPR line	P	F	NA	Wastes and drains – size / fall	P	F	NA
Pipe material	P	F	NA	Plumbing layout	P	F	NA	Test – Water / Air	P	F	NA
Pipe protection	P	F	NA	Pipes supported	P	F	NA	Visual leak check	P	F	NA

DRAINAGE

Pipe diameter	P	F	NA	Connections/Angles	P	F	NA	Holding water	P	F	NA
Bedding material	P	F	NA	Branch length	P	F	NA	Terminal vent	P	F	NA
Gully trap(s)	P	F	NA	Direction/Fall	P	F	NA	LBP/Registration No:			

Officer Name: ALAN Sign: Date: 12/6/12

Form 242a

KAPITI COAST
DISTRICT COUNCIL

SCOPE OF INSPECTION SHEET

Date 4/4/12 SR or BCA 116397 Inspection No. 12

Time 10:40 Documents on site YES / NO

Owner Name WANS Project Description New Dwg.

Site Address 35B KATANGA ST.

Building Plumbing

Circle appropriate Type & Inspection Other WHITEWARE MOVEMENT

Site	Found	Piles	PreSlab	Subfloor	Drainage	PreWrap	PreClad	Weathertight	PreLine	PostLine	Block	Brick	Ret.Wall	Final

Engineer Supervision Yes No n/a Name

Notes 2 x SHOWERS TILEWSGS HYDRATANK PROJECT TO WALLS + FLOORS WITH GOOD COVERAGE SILICONE IN PLACE WITH MESH + TAPE. 2 x COATS.

OK TO CONTINUE

Diagram (if necessary)

Photo's Taken – Nos. ..... saved / scanned? Y / N

Site instruction issued

Result: **Pass** **Part pass** **Fail**

Confirmation of inspection by person on site

Person on site: Builder ☐ Owner ☐ Other ☐ LATE COPY ELECTRICAL. No One on site ☑

Your next inspection will be WATER ON SITE
(Guidance notes for inspection on the rear of this sheet)

Agreed, (Print Name) Sign Date 4/4/12

Officer Name Sign Date 4/4/12

Additional Insp. Sheet No.

Information entered into data base ☐ ***Initial*** ..... ***Date*** ..../..../....

Form 242

KAPITI COAST DISTRICT COUNCIL

WEATHERTIGHTNESS / PRELINE / POSTLINE

Date 4/4/12 SR or BCA 115399 Inspection No. 12

Time 10.40 Documents on site YES / NO

Owner Name WARD Project Description New Dwg.

Site Address 258 KATANGA ST

All inspections are carried out with strict reference to the building consent granted.

P = Pass F = Fail NA = Non-Applicable

Inspection decisions are based on the extent of work inspected at the time of inspection.

Please refer to the related scope sheet for definition of the inspections extent.

Applies to all inspections

Sighted previous inspection notes	Y	N	NA	Conforms with approved drawings	Y	N	NA	Confirm Additional information/amended plan	Y	N	NA

WEATHERTIGHTNESS

Cladding selection complies with BC?	P	F	NA	Roof material complies with BC?	P	F	NA	Sheets fixed to manufacturers	P	F	NA
Roof fixing complies	P	F	NA	Fixings appropriate for durability?	P	F	NA	Sheet layout	P	F	NA
Ridge/hip flashings in place	P	F	NA	Roof/wall junctions flashed	P	F	NA	Control joints where appropriate	P	F	NA
Penetrations correctly flashed	P	F	NA	Fixings appropriate for bracing elements	P	F	NA	Flashings in place	P	F	NA
Clearance provided for fascia & spouting	P	F	NA	Ground clearances achieved	P	F	NA	Clearance off deck surface	P	F	NA
Flashings/wraps in place, parapets/barriers	P	F	NA	Glazing – human impact	P	F	NA	Truss/Rafter fixings	P	F	NA

PRELINE

Max moisture Content .....%	P	F	NA	Insulation R Value	P	F	NA	Bracing connections	P	F	NA
Ventilation to rooms	P	F	NA	Top plate connection	P	F	NA	Air seals	P	F	NA
Timber treatment	P	F	NA	Ceiling batten spacing	P	F	NA	Bottom plate fixings	P	F	NA
Lintel/beam size & fixing	P	F	NA	Stud spacing	P	F	NA		P	F	NA
Plumber Name				TPR line	P	F	NA	Waste pipe size & test	P	F	NA
Soil pipe size and test	P	F	NA	Inbuilt S/W pipes tested	P	F	NA	Floor wastes	P	F	NA
Pipes fixed/supported	P	F	NA	Vents terminated	P	F	NA	Shut off valves	P	F	NA
System: AS3500, G13, Other	P	F	NA	Pressure Test	P	F	NA	Fire wraps and collars	P	F	NA

POSTLINE

Sheet bracing	P	F	NA	Wet area substrate system	P	F	NA	Sheet fixings	P	F	NA
Penetrations sleeved	P	F	NA		P	F	NA	Fire/Acoustic separation	P	F	NA

Officer Name: ..... Officer Sign: ..... Date: 4/4/12

Form 242e

KAPITI COAST
DISTRICT COUNCIL

SCOPE OF INSPECTION SHEET

Date 12/3/2012 SR or BCA 110397 Inspection No. 11

Time 9.20 AM Documents on site YES / NO

Owner Name Project Description NEW Dwgl

Site Address 35 B KORARA ST

Building Plumbing Circle appropriate Type & Inspection Other

Site Found Piles PreSlab Subfloor Drainage PreWrap PreClad Weathertight PreLine PostLine Block Brick Ret.Wall Final

Engineer Supervision Yes No n/a – Name

Notes AQUALINE SHWES IN SHOWER AREAS HAVE BEEN FIXED AS PER MANUFACTURES SPECS 100mm CENTRES

Diagram (if necessary)

Photo's Taken – Nos. saved / scanned? Y / N

Site instruction issued

Result: **Pass** **Part pass** **Fail**

Confirmation of inspection by person on site

Person on site: Builder ☑ Owner ☐ Other ☐ No One on site ☐

Your next inspection will be
(Guidance notes for inspection on the rear of this sheet)

Agreed, CRAIG GLOAG (Print Name) Sign Date 12/3/12

Officer Name TONY Sign Date 12/3/12

Additional Insp. Sheet No

Information entered into data base ☐ ***Initial*** ***Date*** / /

Form 242

KAPITI COAST DISTRICT COUNCIL

WEATHERTIGHTNESS / PRELINE / POSTLINE

Date 12/3/2012 SR or BCA 110297 Inspection No. 11

Time 9:20AM Documents on site YES / NO

Owner Name Project Description NEW Dwgl

Site Address 25 Kotuku St

All inspections are carried out with strict reference to the building consent granted.

P = Pass F = Fail NA = Non-Applicable

Inspection decisions are based on the extent of work inspected at the time of inspection.

Please refer to the related scope sheet for definition of the inspections extent.

Applies to all inspections

Sighted previous inspection notes	Y	N	NA	Conforms with approved drawings	Y	N	NA	Confirm Additional information/amended plan	Y	N	NA

WEATHERTIGHTNESS

Cladding selection complies with BC?	P	F	NA	Roof material complies with BC?	P	F	NA	Sheets fixed to manufacturers	P	F	NA
Roof fixing complies	P	F	NA	Fixings appropriate for durability?	P	F	NA	Sheet layout	P	F	NA
Ridge/hip flashings in place	P	F	NA	Roof/wall junctions flashed	P	F	NA	Control joints where appropriate	P	F	NA
Penetrations correctly flashed	P	F	NA	Fixings appropriate for bracing elements	P	F	NA	Flashings in place	P	F	NA
Clearance provided for fascia & spouting	P	F	NA	Ground clearances achieved	P	F	NA	Clearance off deck surface	P	F	NA
Flashings/wraps in place, parapets/barriers	P	F	NA	Glazing – human impact	P	F	NA	Truss/Rafter fixings	P	F	NA

PRELINE

Max moisture Content .....%	P	F	NA	Insulation R Value	P	F	NA	Bracing connections	P	F	NA
Ventilation to rooms	P	F	NA	Top plate connection	P	F	NA	Air seals	P	F	NA
Timber treatment	P	F	NA	Ceiling batten spacing	P	F	NA	Bottom plate fixings	P	F	NA
Lintel/beam size & fixing	P	F	NA	Stud spacing	P	F	NA		P	F	NA
Plumber Name				TPR line	P	F	NA	Waste pipe size & test	P	F	NA
Soil pipe size and test	P	F	NA	Inbuilt S/W pipes tested	P	F	NA	Floor wastes	P	F	NA
Pipes fixed/supported	P	F	NA	Vents terminated	P	F	NA	Shut off valves	P	F	NA
System: AS3500, G13, Other	P	F	NA	Pressure Test	P	F	NA	Fire wraps and collars	P	F	NA

POSTLINE

Sheet bracing	P	F	NA	Wet area substrate system	P	F	NA	Sheet fixings	P	F	NA
Penetrations sleeved	P	F	NA		P	F	NA	Fire/Acoustic separation	P	F	NA

Officer Name: Tony Officer Sign: Date: 12/3/12

Form 242e

KAPITI COAST
DISTRICT COUNCIL

SCOPE OF INSPECTION SHEET

Date 9/3/12 SR or BCA 110397 Inspection No. 10

Time 10:30 Documents on site YES / NO

Owner Name WADS Project Description NEW DWG

Site Address 35B KOTARE ST

Building / Plumbing — Circle appropriate Type & Inspection — Other

Site | Found | Piles | PreSlab | Subfloor | Drainage | PreWrap | PreClad | Weathertight | PreLine | PostLine | Block | Brick | Ret.Wall | Final

Engineer Supervision Yes No n/a Name

Notes POSTLINE ON NEW BRACE PLAN BY ENGINEER DATED 2/3/12

STANDARD WALL + CEILING LINING IN PLACE + SCREW FIXED.
ALL BRACE WALLS SCREW FIXED AS PER ELITEBRACE 2011 SYSTEM.
DONE TO ENGINEERS UPDATED PLAN

OK TO CONTINUE

Diagram (if necessary)

Photo's Taken – Nos. ..... saved / scanned? Y / N

Site instruction issued – SCREW FIX WET AREA AS PER REQUIRED INSPECTION NOTES

Result: **Pass** **Part pass** **Fail**

Confirmation of inspection by person on site

Person on site: Builder ☑ Owner ☐ Other ☐ ..... No One on site ☐

Your next inspection will be POSTLINE SCREW FIXING ON WET AREAS
(Guidance notes for inspection on the rear of this sheet)

Agreed, CRAIG CLOAG (Print Name) Sign Date 9/3/12

Officer Name GARY Sign Date 9/3/12

Additional Insp. Sheet No. .....

Information entered into data base ☐ ***Initial*** ..... ***Date*** ../../..

Form 242

KAPITI COAST DISTRICT COUNCIL

WEATHERTIGHTNESS / PRELINE / POSTLINE

Date ..... SR or BCA ..... Inspection No. ..... 10 .....

Time ..... Documents on site YES / NO

Owner Name ..... Project Description .....

Site Address .....

All inspections are carried out with strict reference to the building consent granted.

P = Pass F = Fail NA = Non-Applicable

Inspection decisions are based on the extent of work inspected at the time of inspection.

Please refer to the related scope sheet for definition of the inspections extent.

Applies to all inspections

Sighted previous inspection notes	Y	N	NA	Conforms with approved drawings	Y	N	NA	Confirm Additional information/amended plan	Y	N	NA

WEATHERTIGHTNESS

Cladding selection complies with BC?	P	F	NA	Roof material complies with BC?	P	F	NA	Sheets fixed to manufacturers	P	F	NA
Roof fixing complies	P	F	NA	Fixings appropriate for durability?	P	F	NA	Sheet layout	P	F	NA
Ridge/hip flashings in place	P	F	NA	Roof/wall junctions flashed	P	F	NA	Control joints where appropriate	P	F	NA
Penetrations correctly flashed	P	F	NA	Fixings appropriate for bracing elements	P	F	NA	Flashings in place	P	F	NA
Clearance provided for fascia & spouting	P	F	NA	Ground clearances achieved	P	F	NA	Clearance off deck surface	P	F	NA
Flashings/wraps in place, parapets/barriers	P	F	NA	Glazing – human impact	P	F	NA	Truss/Rafter fixings	P	F	NA

PRELINE

Max moisture Content .....%	P	F	NA	Insulation R Value	P	F	NA	Bracing connections	P	F	NA
Ventilation to rooms	P	F	NA	Top plate connection	P	F	NA	Air seals	P	F	NA
Timber treatment	P	F	NA	Ceiling batten spacing	P	F	NA	Bottom plate fixings	P	F	NA
Lintel/beam size & fixing	P	F	NA	Stud spacing	P	F	NA		P	F	NA
Plumber Name				TPR line	P	F	NA	Waste pipe size & test	P	F	NA
Soil pipe size and test	P	F	NA	Inbuilt S/W pipes tested	P	F	NA	Floor wastes	P	F	NA
Pipes fixed/supported	P	F	NA	Vents terminated	P	F	NA	Shut off valves	P	F	NA
System: AS3500, G13, Other	P	F	NA	Pressure Test	P	F	NA	Fire wraps and collars	P	F	NA

POSTLINE

Sheet bracing	P	F	NA	Wet area substrate system	P	F	NA	Sheet fixings	P	F	NA
Penetrations sleeved	P	F	NA		P	F	NA	Fire/Acoustic separation	P	F	NA

Officer Name: ..... **Officer Sign:** ..... **Date:** 9 / 3 / 12

Form 242e

KAPITI COAST
DISTRICT COUNCIL

SCOPE OF INSPECTION SHEET

Date 15/2/12 SR or BCA 110397 Inspection No. 7

Time 10:30 Documents on site YES / NO

Owner Name WARD Project Description NEW DWG

Site Address 35B KOTARE ST

Building Plumbing Circle appropriate Type & Inspection Other

Site Found Piles PreSlab Subfloor Drainage PreWrap PreClad Weathertight PreLine PostLine Block Brick Ret.Wall Final

Engineer Supervision Yes No n/a – Name

Notes MAIN FEED 20mm WITH HOT WATER CYLINDER 20mm, 15mm + 10mm FOR ALL FIXTURES USING DUX SECURA PIPE + FITTINGS WASH TEST + HOLDING NEW POTABLE 20mm + 15mm in PURPLE PIPE FOR TOILETS + HOSETAPS ALSO TESTED

WASTE PIPES IN PLACE WITH 2X TERMINAL VENTS

Diagram (if necessary)

*NOTE HAD DISCUSSION WITH PLUMBER ABOUT WALL HANG TOILET ON BRACE SHOULD HAVE INSTALLED FALSE WALL ON PTRAP PLAN. *

Photo's Taken – Nos. saved / scanned? Y / N

Site instruction issued – TO COMPLETE TERMINAL VENTS

– TO DISCUSS WITH BUILDER ABOUT BOTTOM PLATE'S + VENTS PIPES FOR TOILETS ON BRACE WALLS – POSSIBLE COULD MOVE BRACE WALLS

Result: Pass Part pass Fail

Confirmation of inspection by person on site

Person on site: Builder ☐ Owner ☐ Other ☑ PLUMBER No One on site ☐

Your next inspection will be PLUMBING BUILDING + CHECK BRACEWALLS AS ABOVE
(Guidance notes for inspection on the rear of this sheet)

Agreed, Dean Robinson (Print Name) Sign Date 15/2/12

Officer Name GARY MC Sign Date 15/2/12

Additional Insp. Sheet No.

Information entered into data base ☐ *Initial* *Date* / /

Form 242

KAPITI COAST DISTRICT COUNCIL

WEATHERTIGHTNESS / PRELINE / POSTLINE

Date 15/12/11 SR or BCA 110397 Inspection No. 7

Time 12.30 Documents on site YES / NO

Owner Name Wood Project Description [illegible]

Site Address 53 [illegible]

All inspections are carried out with strict reference to the building consent granted.

P = Pass F = Fail NA = Non-Applicable

Inspection decisions are based on the extent of work inspected at the time of inspection.

Please refer to the related scope sheet for definition of the inspections extent.

Applies to all inspections

Sighted previous inspection notes	Y	N	NA	Conforms with approved drawings	Y	N	NA	Confirm Additional information/amended plan	Y	N	NA

WEATHERTIGHTNESS

Cladding selection complies with BC?	P	F	NA	Roof material complies with BC?	P	F	NA	Sheets fixed to manufacturers	P	F	NA
Roof fixing complies	P	F	NA	Fixings appropriate for durability?	P	F	NA	Sheet layout	P	F	NA
Ridge/hip flashings in place	P	F	NA	Roof/wall junctions flashed	P	F	NA	Control joints where appropriate	P	F	NA
Penetrations correctly flashed	P	F	NA	Fixings appropriate for bracing elements	P	F	NA	Flashings in place	P	F	NA
Clearance provided for fascia & spouting	P	F	NA	Ground clearances achieved	P	F	NA	Clearance off deck surface	P	F	NA
Flashings/wraps in place, parapets/barriers	P	F	NA	Glazing – human impact	P	F	NA	Truss/Rafter fixings	P	F	NA

PRELINE

Max moisture Content .....%	P	F	NA	Insulation R Value	P	F	NA	Bracing connections	P	F	NA
Ventilation to rooms	P	F	NA	Top plate connection	P	F	NA	Air seals	P	F	NA
Timber treatment	P	F	NA	Ceiling batten spacing	P	F	NA	Bottom plate fixings	P	F	NA
Lintel/beam size & fixing	P	F	NA	Stud spacing	P	F	NA		P	F	NA
Plumber Name 13777				TPR line	P	F	NA	Waste pipe size & test	P	F	NA
Soil pipe size and test	P	F	NA	Inbuilt S/W pipes tested	P	F	NA	Floor wastes	P	F	NA
Pipes fixed/supported	P	F	NA	Vents terminated	P	F	NA	Shut off valves	P	F	NA
System: AS3500, G13, Other	R	F	NA	Pressure Test 1500kPa	P	F	NA	Fire wraps and collars	P	F	NA

POSTLINE

Sheet bracing	P	F	NA	Wet area substrate system	P	F	NA	Sheet fixings	P	F	NA
Penetrations sleeved	P	F	NA		P	F	NA	Fire/Acoustic separation	P	F	NA

Officer Name: ..... Officer Sign: ..... Date: 15/12/12

Form 242e

KAPITI COAST
DISTRICT COUNCIL

SCOPE OF INSPECTION SHEET

Date 18-1-2012 SR or BCA 110397 Inspection No. 6

Time 11:10 Am Documents on site YES / NO

Owner Name WARD Project Description New Dwg

Site Address 35 B KOTARE ST

Building Plumbing Circle appropriate Type & Inspection Other

Site Found Piles PreSlab Subfloor Drainage PreWrap PreClad Weathertight PreLine PostLine Block Brick Ret.Wall Final

Engineer Supervision Yes No n/a – Name

Notes

Diagram (if necessary)

THERMOCRAFT WATERGATE WRAP
ALUBAND TAPE TO WINDOWS
WRAP fixed O/K
CLADDINGS CAN Be fixed

Photo's Taken – Nos. saved / scanned? Y / N

Site instruction issued

Result: **Pass** **Part pass** **Fail**

Confirmation of inspection by person on site

Person on site: Builder ☑ Owner ☐ Other ☐ No One on site ☐

Your next inspection will be POST PREPLASTER
(Guidance notes for inspection on the rear of this sheet)

Agreed, Barry Sweetman (Print Name) Sign Date 18/1/2012

Officer Name R J OLIVER Sign Date 18/1/2012

Additional Insp. Sheet No.

Information entered into data base ☐ ***Initial*** ***Date*** / /

Form 242

KAPITI COAST DISTRICT COUNCIL

PRE WRAP / PRE CLAD

Date 18-1-2012 SR or BCA 110397 Inspection No. 6

Time 11.00 am Documents on site YES / NO

Owner Name WARD Project Description New Dwg

Site Address 35 B Konako St

All inspections are carried out with strict reference to the building consent granted.

P = Pass F = Fail NA = Non-Applicable

Inspection decisions are based on the extent of work inspected at the time of inspection.

Please refer to the related scope sheet for definition of the inspections extent.

Applies to all inspections

Sighted previous inspection notes	Y	N	NA	Conforms with approved drawings	Y	N	NA	Confirm Additional information/amended plan	Y	N	NA

PRE WRAP

Cladding type identified	P	F	NA	Exterior sheet bracing & angle brace fixing	P	F	NA	Bracing requirements	P	F	NA
Framing moisture meets cladding requirements ....%	P	F	NA	Bottom plate connections	P	F	NA	Purlin fixing	P	F	NA
Stud spacing appropriate for cladding	P	F	NA	Building wrap type	P	F	NA	Decking substrate	P	F	NA

PRE CLAD

Building wrap type WATERGATE				Building wrap	P	F	NA	Head flashings TO DO	P	F	NA
Flexible sealing tape type AUTOBAND				Flexible sealing tape	P	F	NA	Sill flashings TO DO	P	F	NA
Deck membrane type				Deck membrane fixed in accordance with Spec	P	F	NA	Back flashings	P	F	NA
Saddle flashings	P	F	NA	Internal/external corner flashings	P	F	NA	Jamb flashings	P	F	NA
Capillary clearances	P	F	NA	Flashing of penetrations	P	F	NA	Ground/deck cladding clearance	P	F	NA

CAVITY SYSTEM

Additional strapping to wrap	P	F	NA	Batten timber treatment	P	F	NA	Cavity closers	P	F	NA
Battens in place	P	F	NA	Battens structural fixing	P	F	NA	Cavity spacers	P	F	NA
Cavity spacers size & slope	P	F	NA	Reinforcing fixed in place (stucco)	P	F	NA	Proprietary self spacing mesh	P	F	NA
Mesh spacers (stucco)	P	F	NA	Proprietary control joints (stucco)	P	F	NA	Rigid backing type (stucco)	P	F	NA
Fixings (galvanized or stainless) (stucco)	P	F	NA	Waterproofing to slab-edge	P	F	NA		P	F	NA

Name: R Power Officer Sign: R Power Date: 18/1/2012

Form 242c

KAPITI COAST
DISTRICT COUNCIL

SCOPE OF INSPECTION SHEET

Date 7-12-2011 SR or BCA 110397 Inspection No. 5

Time Documents on site YES / NO

Owner Name Project Description New dwg

Site Address 85B Kotare St

Building Plumbing Circle appropriate Type & Inspection Other

Site Found Piles PreSlab Subfloor Drainage PreWrap PreClad Weathertight PreLine PostLine Block Brick Ret.Wall Final

Engineer Supervision Yes No n/a – Name Alan Pullenger

Notes * Stud to top plate connections
* lintels stiffened
* amended brace plan on site, external connections only

Diagram (if necessary)

Photo's Taken – Nos. saved / scanned? Y / N

Site instruction issued (1) x16 internal truss connections as marked on as built plan (2) revised brace plans required. + calcs (3) engineer to check their design.

24-2-2012

Result: Pass Part pass Fail

Confirmation of inspection by person on site

Person on site: Builder ☑ Owner ☐ Other ☐ No One on site ☐

Your next inspection will be pre clad + check above items
(Guidance notes for inspection on the rear of this sheet)

Agreed, Bryan Sweetman (Print Name) Sign Date 7/12/2011

Officer Name Andrew Sign Date 7/12/2011

Additional Insp. Sheet No.

Information entered into data base ☐ *Initial* *Date* / /

Form 242

KAPITI COAST DISTRICT COUNCIL

PRE WRAP / PRE CLAD

Date 7.12.2011 SR or BCA 110297 Inspection No. 5

Time ..... Documents on site YES / NO

Owner Name ..... Project Description New dwg

Site Address 352 Kakahi St

All inspections are carried out with strict reference to the building consent granted.

P = Pass F = Fail NA = Non-Applicable

Inspection decisions are based on the extent of work inspected at the time of inspection.

Please refer to the related scope sheet for definition of the inspections extent.

Applies to all inspections

Sighted previous inspection notes	Y	N	NA	Conforms with approved drawings	Y	N	NA	Confirm Additional information/amended plan	Y	N	NA

PRE WRAP

Cladding type identified	P	F	NA	Exterior sheet bracing & angle brace fixing	P	F	NA	Bracing requirements	P	F	NA
Framing moisture meets cladding requirements ....%	P	F	NA	Bottom plate connections	P	F	NA	Purlin fixing	P	F	NA
Stud spacing appropriate for cladding	P	F	NA	Building wrap type	P	F	NA	Decking substrate	P	F	NA

PRE CLAD

Building wrap type				Building wrap	P	F	NA	Head flashings	P	F	NA
Flexible sealing tape type				Flexible sealing tape	P	F	NA	Sill flashings	P	F	NA
Deck membrane type				Deck membrane fixed in accordance with Spec	P	F	NA	Back flashings	P	F	NA
Saddle flashings	P	F	NA	Internal/external corner flashings	P	F	NA	Jamb flashings	P	F	NA
Capillary clearances	P	F	NA	Flashing of penetrations	P	F	NA	Ground/deck cladding clearance	P	F	NA

CAVITY SYSTEM

Additional strapping to wrap	P	F	NA	Batten timber treatment	P	F	NA	Cavity closers	P	F	NA
Battens in place	P	F	NA	Battens structural fixing	P	F	NA	Cavity spacers	P	F	NA
Cavity spacers size & slope	P	F	NA	Reinforcing fixed in place (stucco)	P	F	NA	Proprietary self spacing mesh	P	F	NA
Mesh spacers (stucco)	P	F	NA	Proprietary control joints (stucco)	P	F	NA	Rigid backing type (stucco)	P	F	NA
Fixings (galvanized or stainless) (stucco)	P	F	NA	Waterproofing to slab-edge	P	F	NA		P	F	NA

Name: Andrew Officer Sign: A. H Date: 7/12/2011

Form 242c

KAPITI COAST
DISTRICT COUNCIL

SCOPE OF INSPECTION SHEET

Date 18/11/11 SR or BCA ~~[illegible]~~ 110397 Inspection No. 4.

Time 8.40 Documents on site YES / NO

Owner Name WARD Project Description [illegible]

Site Address 35B KOTARE ST

Building Plumbing Circle appropriate Type & Inspection Other

Site Found Piles PreSlab Subfloor Drainage PreWrap PreClad Weathertight PreLine PostLine Block Brick Ret.Wall Final

Engineer Supervision Yes No n/a – Name

Diagram (if necessary)

Notes 100mm PVC WASTE + SOIL PIPE IN PLACE CONNECTED TO ALL FIXTURES + LATERAL WITH GOOD FALL BEDDED IN PLASTICAL CLAP
INSPECTION POINTS IN PLACE
2 x GULLY TRAPS IN + CHANGED
STORMWATER GOES INTO TANK OVER FLOW TO CREEK.
ALSO HAS ~~[illegible]~~ 150mm STORMWATER FOR DRIVEWAY SUMP.

Photo's Taken – Nos. saved / scanned? Y / N

Site instruction issued AS BUILT DRAWING TO FOLLOW

Result: **Pass** **Part pass** **Fail**

Confirmation of inspection by person on site

Person on site: Builder ☐ Owner ☐ Other ☑ DRAINLAYER No One on site ☐

Your next inspection will be
(Guidance notes for inspection on the rear of this sheet)

Agreed, David Hodges (Print Name) Sign [signature] Date 18/11/11

Officer Name GARETH Sign [signature] Date 18/11/11

Additional Insp. Sheet No.

Information entered into data base ☐ ***Initial*** ***Date*** ../../..

Form 242

KAPITI COAST DISTRICT COUNCIL

SITE / FOUNDATIONS / PILES / PRE SLAB / SUBFLOOR / DRAINAGE

Date ..... **SR or BCA** ..... **Inspection No.** 4

Time ..... **Documents on site** YES / NO

Owner Name ..... **Project Description** .....

Site Address .....

All inspections are carried out with strict reference to the building consent granted.

P = Pass F = Fail NA = Non-Applicable

Inspection decisions are based on the extent of work inspected at the time of inspection.

Please refer to the related scope sheet for definition of the inspections extent.

SITE

Conforms with approved drawings	Y	N	NA	Checked driveway	Y	N	NA	Engineer supervision required	Y	N	NA
Scope of Resource consent granted?	Y	N	NA	Checked position off relevant boundaries and datum height	Y	N	NA		Y	N	NA
Expert Opinion (Producer statement) required	Y	N	NA	Name of Surveyor Company				Name of Engineer Company			

FOUNDATIONS				PILES				SUBFLOOR			
Footing Depth	P	F	NA	Pile size	P	F	NA	Pile/Bearer/Joist Fixings	P	F	NA
Good bearing (NZS 3604)	P	F	NA	Pile layout is to plan	P	F	NA	Notching, Holes, etc	P	F	NA
Reinforcing	P	F	NA	Special piles - point load	P	F	NA	Solid Blocking	P	F	NA
Siting	P	F	NA	Timber Treatment	P	F	NA	Joists	P	F	NA
Sub-floor vents	P	F	NA	Hole depth	P	F	NA	Beams/Bearers	P	F	NA

PRE SLAB

Rebate for brick veneer	P	F	NA	Sand blinding	P	F	NA	Steel reinforcing	P	F	NA
Ground clearance	P	F	NA	Slab thickenings	P	F	NA	Bar chairs	P	F	NA
Concrete Cover	P	F	NA	Vapour barrier (DPC)	P	F	NA	DPC penetrations taped	P	F	NA
Driveway s/w control	P	F	NA	Bottom plate fixings	P	F	NA	Minimum Floor Level	P	F	NA
Secondary flow path	P	F	NA	TPR line	P	F	NA	Wastes and drains – size / fall	P	F	NA
Pipe material	P	F	NA	Plumbing layout	P	F	NA	Test – Water / Air	P	F	NA
Pipe protection	P	F	NA	Pipes supported	P	F	NA	Visual leak check	P	F	NA

DRAINAGE

Pipe diameter	P	F	NA	Connections/Angles	P	F	NA	Holding water	P	F	NA
Bedding material	P	F	NA	Branch length	P	F	NA	Terminal vent	P	F	NA
Gully trap(s)	P	F	NA	Direction/Fall	P	F	NA	LBP/Registration No:	16176.		

Officer Name: ..... **Sign:** ..... **Date:** 15 / 11 / 11

Form 242a

KAPITI COAST
DISTRICT COUNCIL

SCOPE OF INSPECTION SHEET

Date 11/11/11 SR or BCA 110397 Inspection No. 3

Time 2.30 Documents on site YES / NO

Owner Name [illegible] Project Description New Dwg

Site Address 35B Kapiti St

Building / Plumbing

Circle appropriate Type & Inspection Other .....

Site / Found / Piles / PreSlab / Subfloor / Drainage / PreWrap / PreClad / Weathertight / PreLine / PostLine / Block / Brick / Ret.Wall / Final

Engineer Supervision Yes / No / n/a – Name .....

Notes Pipes through ribbed foundation + slab near protected as per design + requirements.

Diagram (if necessary)

Photo's Taken – Nos. ..... saved / scanned? Y / N

Site instruction issued Stick notes P.S.4 + site report to supply survey report.

Result: **Pass** **Part pass** **Fail**

Confirmation of inspection by person on site

Person on site: Builder ☑ Owner ☐ Other ☐ ..... No One on site ☐

Your next inspection will be .....
(Guidance notes for inspection on the rear of this sheet)

Agreed, Lester Skelton (Print Name) Sign [signature] Date 11/11/11

Officer Name [illegible] Sign [signature] Date 1/11/11

Additional Insp. Sheet No. .....

Information entered into data base ☐ ***Initial*** ..... ***Date*** ..../..../....

Form 242

KAPITI COAST
DISTRICT COUNCIL

SITE / FOUNDATIONS / PILES / PRE SLAB / SUBFLOOR / DRAINAGE

Date ..... **SR or BCA** 110 37 ..... **Inspection No.** 5

Time 2.30 ..... **Documents on site** YES / NO

Owner Name ..... **Project Description** ..... Room Pad

Site Address .....

All inspections are carried out with strict reference to the building consent granted.

P = Pass F = Fail NA = Non-Applicable

Inspection decisions are based on the extent of work inspected at the time of inspection.

Please refer to the related scope sheet for definition of the inspections extent.

SITE

Conforms with approved drawings	Y	N	NA	Checked driveway	Y	N	NA	Engineer supervision required	Y	N	NA
Scope of Resource consent granted?	Y	N	NA	Checked position off relevant boundaries and datum height	Y	N	NA		Y	N	NA
Expert Opinion (Producer statement) required	Y	N	NA	Name of Surveyor Company				Name of Engineer Company			

FOUNDATIONS				PILES				SUBFLOOR			
Footing Depth	P	F	NA	Pile size	P	F	NA	Pile/Bearer/Joist Fixings	P	F	NA
Good bearing (NZS 3604)	P	F	NA	Pile layout is to plan	P	F	NA	Notching, Holes, etc	P	F	NA
Reinforcing	P	F	NA	Special piles - point load	P	F	NA	Solid Blocking	P	F	NA
Siting	P	F	NA	Timber Treatment	P	F	NA	Joists	P	F	NA
Sub-floor vents	P	F	NA	Hole depth	P	F	NA	Beams/Bearers	P	F	NA

PRE SLAB

Rebate for brick veneer	P	F	NA	Sand blinding	P	F	NA	Steel reinforcing	P	F	NA
Ground clearance	P	F	NA	Slab thickenings	P	F	NA	Bar chairs	P	F	NA
Concrete Cover	P	F	NA	Vapour barrier (DPC)	P	F	NA	DPC penetrations taped	P	F	NA
Driveway s/w control	P	F	NA	Bottom plate fixings	P	F	NA	Minimum Floor Level	P	F	NA
Secondary flow path	P	F	NA	TPR line	P	F	NA	Wastes and drains – size / fall	P	F	NA
Pipe material	P	F	NA	Plumbing layout	P	F	NA	Test – Water / Air	P	F	NA
Pipe protection	P	F	NA	Pipes supported	P	F	NA	Visual leak check	P	F	NA

DRAINAGE

Pipe diameter	P	F	NA	Connections/Angles	P	F	NA	Holding water	P	F	NA
Bedding material	P	F	NA	Branch length	P	F	NA	Terminal vent	P	F	NA
Gully trap(s)	P	F	NA	Direction/Fall	P	F	NA	LBP/Registration No:			

Officer Name: ..... **Sign:** ..... **Date:** 7 / 11 / 11

Form 242a

KAPITI COAST
DISTRICT COUNCIL

SCOPE OF INSPECTION SHEET

Date 10/11/11 SR or BCA 110397 Inspection No. 2

Time 8.30 Documents on site YES / NO

Owner Name WANS Project Description New Dwelling

Site Address 35B KOTARE ST

Building Plumbing

Circle appropriate Type & Inspection Other

Site Found Piles PreSlab Subfloor Drainage PreWrap PreClad Weathertight PreLine PostLine Block Brick Ret.Wall Final

Engineer Supervision Yes No n/a – Name DESIGN SCAPE

Diagram (if necessary)

Notes SITE DONE BY SURVEYOR TO
PROVIDE LAYOUT
ENGINEER SLAB + FOUNDATION
REDRAFT DONE AS PER DESIGN.
POLYTHENE LAID.
PODS IN PLACE.
ALL STEEL IN + TIED.
NOTE USED 665 MESH IN + TIED
STEEL IN PLACE FOR BLOCKWALL
ALSO ENGINEERED
OK TO CONTINUE.

Photo's Taken – Nos. ..... saved / scanned? Y / N

Site instruction issued PIPE PENETRATIONS THROUGH RAFT SHOULD BE AS PER REQUIRED.

PS4 FROM ENGINEER + SITE REPORT.
SURVEY REPORT.

11/11/11 GMK

Result: **Pass** **Part pass** **Fail**

Confirmation of inspection by person on site

Person on site: Builder ☑ Owner ☐ Other ☐ No One on site ☐

Your next inspection will be PRE-WRAP.
(Guidance notes for inspection on the rear of this sheet)

Agreed Bryan Sweetman (Print Name) Sign Date 10/11/11

Officer Name GRAHAM K Sign Date 10/11/11

Additional Insp. Sheet No. .....

Information entered into data base ☐ *Initial* ..... *Date* ../../..

Form 242

KAPITI COAST DISTRICT COUNCIL

SITE / FOUNDATIONS / PILES / PRE SLAB / SUBFLOOR / DRAINAGE

Date ..... **SR or BCA** 110397 ..... **Inspection No.** 2

Time 1.30 ..... **Documents on site** YES / NO

Owner Name ..... **Project Description** .....

Site Address .....

All inspections are carried out with strict reference to the building consent granted.

P = Pass F = Fail NA = Non-Applicable

Inspection decisions are based on the extent of work inspected at the time of inspection.

Please refer to the related scope sheet for definition of the inspections extent.

SITE

Conforms with approved drawings	Y	N	NA	Checked driveway	Y	N	NA	Engineer supervision required	Y	N	NA
Scope of Resource consent granted?	Y	N	NA	Checked position off relevant boundaries and datum height	Y	N	NA		Y	N	NA
Expert Opinion (Producer statement) required	Y	N	NA	Name of Surveyor Company				Name of Engineer Company			

FOUNDATIONS				PILES				SUBFLOOR			
Footing Depth	P	F	NA	Pile size	P	F	NA	Pile/Bearer/Joist Fixings	P	F	NA
Good bearing (NZS 3604)	P	F	NA	Pile layout is to plan	P	F	NA	Notching, Holes, etc	P	F	NA
Reinforcing	P	F	NA	Special piles - point load	P	F	NA	Solid Blocking	P	F	NA
Siting	P	F	NA	Timber Treatment	P	F	NA	Joists	P	F	NA
Sub-floor vents	P	F	NA	Hole depth	P	F	NA	Beams/Bearers	P	F	NA

PRE SLAB

Rebate for brick veneer	P	F	NA	Sand blinding	P	F	NA	Steel reinforcing	P	F	NA
Ground clearance	P	F	NA	Slab thickenings	P	F	NA	Bar chairs	P	F	NA
Concrete Cover	P	F	NA	Vapour barrier (DPC)	P	F	NA	DPC penetrations taped	P	F	NA
Driveway s/w control	P	F	NA	Bottom plate fixings	P	F	NA	Minimum Floor Level	P	F	NA
Secondary flow path	P	F	NA	TPR line	P	F	NA	Wastes and drains – size / fall	P	F	NA
Pipe material	P	F	NA	Plumbing layout	P	F	NA	Test – Water / Air	P	F	NA
Pipe protection	P	F	NA	Pipes supported	P	F	NA	Visual leak check	P	F	NA

DRAINAGE

Pipe diameter	P	F	NA	Connections/Angles	P	F	NA	Holding water	P	F	NA
Bedding material	P	F	NA	Branch length	P	F	NA	Terminal vent	P	F	NA
Gully trap(s)	P	F	NA	Direction/Fall	P	F	NA	LBP/Registration No:			

Officer Name: ..... **Sign:** ..... **Date:** 10 / 11 / 10

Form 242a

KAPITI COAST
DISTRICT COUNCIL

SCOPE OF INSPECTION SHEET

Date 3/11/11 SR or BCA 110397 Inspection No. 1

Time 1:40. Documents on site YES / NO

Owner Name WARD Project Description [illegible]

Site Address 353 KOTAREST

Building Plumbing Circle appropriate Type & Inspection Other .....

Site Found Piles PreSlab Subfloor Drainage PreWrap PreClad Weathertight PreLine PostLine Block Brick Ret.Wall Final

Engineer Supervision Yes No n/a – Name .....

Notes PVC WASTE + SOIL PIPES IN PLACE FOR ALL FIXTURES WITH GOOD FALL OUT OF SLAB. UNDER TEST + HOLDING. USING 100mm FOR TOILETS + WASTE PIPES 50mm. 32mm COPPER LINE IN PLACE FOR SCANDIA BASIN + T.P.R LINE. PIPE PROTECTION PLASTIC POLY

OK TO CONTINUE. —

Diagram (if necessary)

Photo's Taken – Nos. ..... saved / scanned? Y / N

Site instruction issued REQUIRES 50mm TRAPPED VENT ON KITCHEN WASTE AREAS VENTED COPPER LINE WILL NEED TO BE TRAPPED

Result: **Pass** **Part pass** **Fail**

Confirmation of inspection by person on site

Person on site: Builder ☐ Owner ☐ Other ☑ PLUMBER No One on site ☐

Your next inspection will be .....
(Guidance notes for inspection on the rear of this sheet)

Agreed, D. Robinson (Print Name) Sign ..... Date 3/11/11

Officer Name GARETH Sign ..... Date 3/11/11

Additional Insp. Sheet No. .....

Information entered into data base ☐ ***Initial*** ..... ***Date*** ..../..../....

Form 242

KAPITI COAST
DISTRICT COUNCIL

SITE / FOUNDATIONS / PILES / PRE SLAB / SUBFLOOR / DRAINAGE

Date ..... **SR or BCA** ..... **Inspection No.** .....

Time ..... **Documents on site** YES / NO

Owner Name ..... **Project Description** .....

Site Address .....

All inspections are carried out with strict reference to the building consent granted.

P = Pass F = Fail NA = Non-Applicable

Inspection decisions are based on the extent of work inspected at the time of inspection.

Please refer to the related scope sheet for definition of the inspections extent.

SITE

Conforms with approved drawings	Y	N	NA	Checked driveway	Y	N	NA	Engineer supervision required	Y	N	NA
Scope of Resource consent granted?	Y	N	NA	Checked position off relevant boundaries and datum height	Y	N	NA		Y	N	NA
Expert Opinion (Producer statement) required	Y	N	NA	Name of Surveyor Company				Name of Engineer Company			

FOUNDATIONS				PILES				SUBFLOOR			
Footing Depth	P	F	NA	Pile size	P	F	NA	Pile/Bearer/Joist Fixings	P	F	NA
Good bearing (NZS 3604)	P	F	NA	Pile layout is to plan	P	F	NA	Notching, Holes, etc	P	F	NA
Reinforcing	P	F	NA	Special piles - point load	P	F	NA	Solid Blocking	P	F	NA
Siting	P	F	NA	Timber Treatment	P	F	NA	Joists	P	F	NA
Sub-floor vents	P	F	NA	Hole depth	P	F	NA	Beams/Bearers	P	F	NA

PRE SLAB

Rebate for brick veneer	P	F	NA	Sand blinding	P	F	NA	Steel reinforcing	P	F	NA
Ground clearance	P	F	NA	Slab thickenings	P	F	NA	Bar chairs	P	F	NA
Concrete Cover	P	F	NA	Vapour barrier (DPC)	P	F	NA	DPC penetrations taped	P	F	NA
Driveway s/w control	P	F	NA	Bottom plate fixings	P	F	NA	Minimum Floor Level	P	F	NA
Secondary flow path	P	F	NA	TPR line	P	F	NA	Wastes and drains – size / fall	P	F	NA
Pipe material	P	F	NA	Plumbing layout	P	F	NA	Test – Water / Air	P	F	NA
Pipe protection	P	F	NA	Pipes supported	P	F	NA	Visual leak check	P	F	NA

DRAINAGE

Pipe diameter	P	F	NA	Connections/Angles	P	F	NA	Holding water	P	F	NA
Bedding material	P	F	NA	Branch length	P	F	NA	Terminal vent	P	F	NA
Gully trap(s)	P	F	NA	Direction/Fall	P	F	NA	LBP/Registration No:			

Officer Name: ..... **Sign:** ..... **Date:** 3 / 4 / 19

Form 242a

KAPITI COAST

Site Inspection Report - New BC Applications

BC Application number: 110397 Lot 1 DP 409453

Site Address: 35B KOTARE ST

Building Project: NEW DWELLING

Check NCS status is currently "To Site Inspection"

Item to be checked	Decision	Record any relevant information	Action required
Contours match application?	Yes / No		
Datum point identified?	Yes / No		
Boundaries identified?	Yes / No		
Check ground conditions OK?	Yes / No	ENGINEER	
Check f/path, kerb & channel, grass berm, note existence/damage.	Yes / No	ALL GOOD	
Vehicle entrance crossing installed (describe condition)	Yes / No	SHARED DRIVE	
Photos taken? (Save & link to NCS)	Yes / No		
Dogs on property?	Yes / No		
Is there a requirement for further foundation investigation e.g Engineers design	Yes / No	ENGINEER	Referred to Approvals T/L Yes / No

Record all decisions in accordance with KCDC Policy 007. Circle Yes or No in each case.

***Note:** if there is a requirement for further information or some areas which do not appear to comply refer file to Team Leader Consent Approvals for action.*

Inspecting Officer: Name: ALAN Signature:

Date Inspected: 7/7/11

Unless further foundation information required, change NCS status to "To Plumbing & Drainage" and place file in P&D shelf area for Approvals. If further information is required, then Status change to "To Senior Building Inspector" and hand to Team Leader Consent Approvals for action.

KCDC Form 241 ver. 1

KCDC CODE COMPLIANCE REVIEW CHECK SHEET

Criteria: All building work except for minor works or major projects. *Refer BI-WI-024*

Address: 35 B Kahure St Waikanae.	Date: 25/2/2013 BC No: 110397

application for code compliance certificate (Form 278) completed	(Y)	N

Confirm all required inspections have been completed and passed: Answer: Yes *or* (No)

If inspections have been missed, what supporting info and method of verification has been provided to compensate for missed inspection. (Describe):
inspection 2 passed with #3. Inspection 5 passed at #8
Inspection #7, revised brace plan received from engineer.

Work in accordance with approved consent and approved amendments		(Yes)	No
If no, has NTF been issued:	N/A	Yes	(No)
Have items of non compliance been resolved and NTF uplifted.	(N/A)	Yes	No

Note: If work is not in accordance with consent, (and approved amendments) or NTF matters have not been resolved, suspend application for Code Compliance Certificate

Supporting documentation required in building consent addenda *(Accept in accordance with KCDC Policy 002) Form completed during BC Approval process*

Tick (√) indicates yes, N/A indicates considered - but not applicable	Req'd	Supplied	Accept
copy of electrical certificate x2	✓	✓	✓
copy of gas certificate	NA		
an "as-built" drainage plan	✓	✓	✓
plumbing (Form 125) for pressure test and installation piped services	✓	✓	✓
drainage (Form 126) for stormwater installation	✓	✓	✓
drainage (Form 127) for private sewer installation	✓	✓	✓
a Construction Review (PS4) statement for Structural engineering	~~NA~~ ✓		
a Construction Review (PS4) statement for Fire engineering	NA		
a Construction Review (PS4) statement for Geo-technical engineering	NA		
Roof cladding warranty	Na	✓	✓
Solar water heating technical specifications	NA		
wall cladding/texture coating installation applicator warranty	✓	✓	✓
a copy of the lift certificate	NA		
a certificate from the fire alarm installer	NA		
a certificate from the sprinkler installer	NA		
a copy of wet-area membrane installers warranty	✓	✓	✓
A copy of deck membrane manufacturer's installers warranty/guarantee	N/A		
~~FPIS (verifier) Fire Systems Certification~~	✓		
SOLAR P.S.	✓	✓	✓
PSI truss design	Na	✓	✓
nu-look P.S.	Na	✓	✓
woodburners installers checksheet	Na	✓	✓

If specified supporting documentation has not been provided, what alternative information or verification method has been provided to compensate. (describe):

Compliance Schedule

Is a new or amended compliance schedule required?	Y	N
If "Y" Has it been issued? (Refer note below)	Y	N

If the new/ revised compliance schedule has not been issued, what action has been taken to ensure it will be issued? Outline:

Note: If the draft/ revised compliance schedule has not been issued, the Code Compliance Certificate cannot be issued. Suspend issuing CCC until this matter is addressed.

Building consent requirements.

Are there any item specified in the building consent or PIM that have not been completed.

Outline:

Are there any development impact fees to be paid outstanding? Yes / No *(if yes, CCC cannot be issued)*

Approve to issue Code Compliance Certificate if all other outstanding fees are paid. YES / NO

Building officer:

Signature:

Date: 25 / 2 / 2013

Name: Andrew

Co-reviewer:

Signature:

Date: 26 / 2 / 13

Name: Russell Brook

FOR COUNCIL USE:

DEPARTMENT	TICK FOR REFERRAL	COMMENTS	APPROVING OFFICER/ DATE
Site Inspection	✓	Refer to Form 241 for completion of site Inspection & sign off this form when completed.	
Resource Consents (refer PIM Sheet)	✓		
Plumbing and Drainage	✓		12/7/2011
Building	✓		Simon Copp 18-8-11
Fire Design			
Compliance Schedule			
Environmental Health			
Other.....			

NOTES:

KAPITI COAST DISTRICT COUNCIL

Sect. 221 Lot 3 only!

Building Consent No.	110397
Building Project	New house & Garage
Location (Site Address)	35B Kotare St, Waikanae
Building Category	*Circle appropriate category* 0 (1) 2 3

RECEIVED
06 JUL 2011
KAPITI COAST DISTRICT COUNCIL

Application workflow checklist

	Name & Signature Note # A signature confirms that the application contains sufficient information to enable compliance with the building code to be assessed	Date
# **Note:** Checked, date stamped and initialled by TO/BCO. Select and circle appropriate category above & identify allocation to appropriate technical groups and if required to go to "site inspection" **AP-WI-001**	Simon Copp	06-07-11
Payment taken and receipted (details entered inside this cover sheet) by CSO **CS-WI-008**		
Data entered and invoiced by CSO **CS-WI-008**	Barbara	6/7/11
Pages numbered by CSO **CS-WI-008**	Simon Copp	06-07-11
BC Application and documentation scanned, checked & status update by CSO **CS-WI-009**	Barbara	6/7/11
BC Application signed over to BC **CS-WI-009**	Barbara	7/7/11
Application reviewed by Technical Officers who sign off at back of this form **AP-WI-026 & AP-WI-009**	Simon Copp	18-08-11
Once Technical review complete, passed to CS for Plan Production and Invoicing **AP-WI-009**		
CSO checks data entry input, including required inspections **CS-WI-012**		
BC, plans and other appropriate paperwork produced by CSO **CS-WI-012**		
BC, Approved plans and appropriate paperwork sent to applicant or agent with receipt by CSO **CS-WI-012**	Barbara	13/9/11
Inspection envelope prepared by CSO with endorsed plans and other appropriate paperwork and filed to cabinet. **CS-WI-012**		

CONSENT DATA INPUT REQUIREMENTS

REQUIRED INSPECTIONS						
✓	Foundation/Piles	32	✓	Lapse and cancellation after 12mths of consent	23		Installation of solid fuel appliance (wood burner) comply and secured
✓	Block	2	✓	Engineer design specific components	23A		Second hand wood burner certified
✓	Pre-Slab (Plumbing)	3	✓	Foundations to solid bearing of 200mm	25	✓	Contractor to leave site clean and clear
✓	Pre-Slab (Building)	4		NZS3604 as acceptable solution in terms of NZ Building Code	30		To comply with Food Hygiene Regulations 1974
	Sub-Floor						
✓	Drainage	6		Not approved as Habitable Room	31		As in CCZ, all fixings need to be stainless steel
✓	Pre-Wrap	9	✓	Note and comply with all endorsements on approved plans	33		Approval only given for relocation purposes
✓	Pre-Clad	10		Names and Registration of plumber and drain-layer required	34		If cladding to have pre-finished colour coating, to be appropriate for coastal conditions
✓	Weathertightness						
✓	Pre-lining (Building)	11		Concealed soil and TV pipes and gas flues only allowed in ducts or minimum framed	38		Window sashes on upper levels less than 760mm above floor to have stays fixed
✓	Pre-lining (Plumbing)						
✓	Wet areas - membrane	12		Hot & Cold water pipes tested to 1500kPa	39		Construction of playground to comply with NZS5828
✓	Post Lining						
	Brick Veneer	13		Roof stormwater to be connected to existing	40		Fencing, gates, doors directly leading to swimming pool to comply with Pool Act 1987
✓	Retaining Wall						
✓	Final (Dwelling)	14		Copper water pipes not permitted	43	✓	Textured systems should be applied by licensed, trained applicators – supply warranty
	Final (Commercial &Multi-resd)						
		15		Owner/builder to ensure prop foundation height will allow satisfactory connection	44	✓	Exterior cladding system to be completed and inspected prior to internal lining
		21	✓	Minimum FFL to comply with NZS3604			

STANDARD CONSENT CONDITIONS		
	37	
	72	
	80	

NON-STANDARD ADDENDA

Compaction certificate by engineer to be supplied to council prior to placing reinforcing and concrete.

FOR OFFICE USE ONLY

FEES		APPLICATION FEE $
Building Fee	$3007.00	$5060-00
Sewer Connection	$.....	RECEIPT NO DATE.....
Water Connection	$.....	
Vehicle Crossing	$.....	INVOICE NO DATE.....
Damage Deposit	$508.00	24079 6/7/11
Code Compliance Administration	$.....	RECEIPT NO DATE.....
Building Research Levy	$500.00	381367 6/7/11
Development Levy	$.....	FEES PAID BY:
DBH Levy	$1005.00	Anthony & Lorna Ward
Compliance Schedule	$.....	
Digital Storage Fee	$40.00	BUILDING CONSENT NUMBER / DATE ISSUED
Certificate of Title Charge	$.....	110397 6/7/11
Photocopying	$.....	
SUBTOTAL	$.....	AUTHORISATION FOR REFUND OF DEPOSIT
Less Fee Paid	$.....	Deposit held = $.....
TOTAL	$5060.00	Cost to Repair Damage Caused During Construction = $.....
GST INCLUDED	$.....	Total Balance to be Refunded
		Authority Number:
		Authorised: DATE:

GST 51-860-608

Received with thanks by 49/01
KAPITI COAST DISTRICT COUNCIL

6-07-11 12:43 Receipt no.381367

DR BC110397
ANTHONY & LORNA WARD 5,060.00-
Anthony & Lorna Ward::35B Kotare Street
CQ W
Westpac Bank Cheque 5,060.00

Kāpiti Coast District Council

Private Bag 60 601
Paraparaumu 5254
New Zealand

Tel (04) 296 4700
or 0800 486 486
Fax (04) 296 4830 ■
kapiti.council@kapiticoast.govt.nz ■
www.kapiticoast.govt.nz ■

Building consent 110397

Section 51, Building Act 2004

The building

Street address of building: 35B Kotare Street, Waikanae

Legal description of land where building is located: LOT 1 DP 409453 C/T 34B/419

Valuation number: 1496061603

Building name: Dwelling & Separate Garage

Location of building within site/block number: House Nth end & Garage Sth end of site.

Level/unit number:

The owner

Name of owner: Anthony & Lorna Ward

Contact person: Stuart Jackson - Agent - 905 0550

Mailing address: 35B Kotare Street, Waikanae

Street address/registered office:

Phone number: Landline: 04 293 7203 Mobile: 027 551 4443

Daytime: After hours:

Facsimile number:

Email address: kotareg@xtra.co.nz

Website:

First point of contact for communications with the council/building consent authority:
As above

Building work

The following building work is authorised by this building consent:

Build new house at north end of site. Build shed and garage at south end of site. Construct retaining wall on excavation for drive access.

Residential dwelling

This building consent is issued under section 51 of the Building Act 2004. This building consent does not relieve the owner of the building (or proposed building) of any duty or responsibility under any other Act relating to or affecting the building (or proposed building).

This building consent also does not permit the construction, alteration, demolition, or removal of the building (or proposed building) if that construction, alteration, demolition, or removal would be in breach of any other Act.

delivering on the community's plan KĀPITI COAST DISTRICT COUNCIL me huri whakamuri, ka titiro whakamua

The building must be altered, removed, or demolished on or before the end of Over 50 years years from the date of issue of this consent (being the specified intended life of the building); and

Compliance schedule

A compliance schedule is not required for the building.

Attachments

Copies of the following documents are attached to this building consent:

Signature

Building Control Officer

Position

On behalf of: KAPITI COAST DISTRICT COUNCIL

Date: 18/08/11

13 September 2011

Anthony & Lorna Ward
35B Kotare Street
Waikanae

Dear Sir/Madam

Approval of Building Consent: 110397

Description: Build new house at north end of site. Build shed and garage at south end of site Construct retaining wall on excavation for drive access.
Location: 35B Kotare Street, Waikanae
Legal Description: LOT 1 DP 409453 C/T 34B/419

I am pleased to inform you that the above building consent application has been approved. The building consent documents have been issued and are enclosed.

Before starting any work please read ALL the building consent documents carefully and in full so that you as the owner understand the conditions under which the consent has been issued.

As the owner you are also responsible for the following:

- ensuring that building work starts within 12 months of the approval of the building consent and that work progresses at a reasonable pace.
- ensuring that all required inspections are completed and that a Code Compliance Certificate is obtained once the work has been completed – please be aware that before a Code Compliance Certificate is issued, the building work must comply with the Building Act 2004 and the Building Code as at the date of final inspection.
- that no work with noisy equipment is to be carried out before 7.30 a.m. or after 6 p.m. Monday to Saturday. During the week there may be workers on site from 6.30 a.m. quietly preparing for work. Work with noisy equipment is not permitted on Sundays and public holidays.
- ensuring that no damage occurs to public property, for example footpaths or retaining structures. Should damage occur you will be required to pay for any repairs.
- ensuring that if you wish to make any changes to the approved building consent, then an amendment to the building consent will need to be lodged with us.

If you have any questions regarding your building consent or your responsibilities, please contact Kapiti Coast District Council on (04) 9045 617.

Addenda to Application

Application

Anthony & Lorna Ward 35B Kotare Street Waikanae	No.	110397

Project

Description	New (& prebuilt) House, Unit, Bach, Crib, Town House etc. Being Stage 1 of an intended 1 Stages Build new house at north end of site. Build shed and garage at south end of site. Construct retaining wall on excavation
Intended Life	Specified as Over 50 years years
Intended Use	Residential dwelling
Estimated Value	$500,000
Location	35B Kotare Street, Waikanae
Legal Description	LOT 1 DP 409453 C/T 34B/419
Valuation No.	1496061603

Builder: Cox & Sweetman Ltd 37 Ihaka Street, Paraparaumu : 04 902 5618

Designer: Designscape - Allan Pullenger 298 Rosetta Road, Ramati : 04 902 8528 / 027 442 0486

Drainlayer: TBA

Plumber: Advanced Plumbing & Gas Services Ltd PO Box 45151, Waterloo, Lower Hutt : 04 577 3007 / 021 492 291

Contractor: Allan Pullenger 298 Rosetta Road, Raumati : 04 902 8528 / 027 442 0486

Contractor: Solar Works Ltd 6 Ocean Vista Lane, Paraparaumu : 0800 649 649 / 021 168 5062

General Requirements

a) The Building Inspector is to be given 24 hours' notice before carrying out the following inspections:

1. Foundations
2. Block
3. Pre-slab
4. Pre-slab
5. Drainage
6. Pre Wrap
7. Pre Clad
8. Weathertightness
9. Preline
10. Preline
11. Wet Area - pre Application

12. Wet Area - post application
13. Postline
14. Retaining Wall
15. Final Inspection

b) To arrange for any of the above required inspections by Building Control Team, please contact the Call Centre on (04) 296 4700 between the hours of 8am and 5pm.

I have read the foregoing addenda to application, and the Owner/Builder/Authorised Person hereby agrees to comply with them.

OWNER/BUILDER/
AUTHORISED PERSON **Date:**

3	Addenda to Application 110397

1. LAPSE AND CANCELLATION OF BUILDING CONSENT. A building consent shall lapse and be of no effect if the building work concerned has not been commenced within 12 calendar months after the date of issue. Or within such further period as the territorial authority allows.
2. The inspection of all specific design components of the building is the responsibility of the Design Engineer who is also required to supply a written report to Council.
3. All foundations are to be to solid bearing minimum of 300mm
4. Note and comply with endorsements on approved plans.
5. Minimum heights of finished concrete slab-on-ground floors above adjoining finished ground level to comply with the current NZS3604.
6. Contractor to leave site clear of all demolition materials and in a tidy state.
7. Textured Systems should be applied by licensed, trained applicators only. Supply copy of warranty to Certifier.
8. Exterior cladding system to be previously completed and inspected by Council's Inspector prior to any subsequent prelining inspection/approval being granted for the fixing of internal linings.
9. Compaction Certificate by Engineer to be supplied to Council prior to placing reinforcing and concrete.
10. All work shall be carried out in general accordance with RM`s 100144 & 050238 and approved plans.
11. DIF Fees: $1478.70

I have read the foregoing addenda to application, and the Owner/Builder/Authorised Person hereby agrees to comply with them.

OWNER/BUILDER/
AUTHORISED PERSON **Date:**

BC 110397

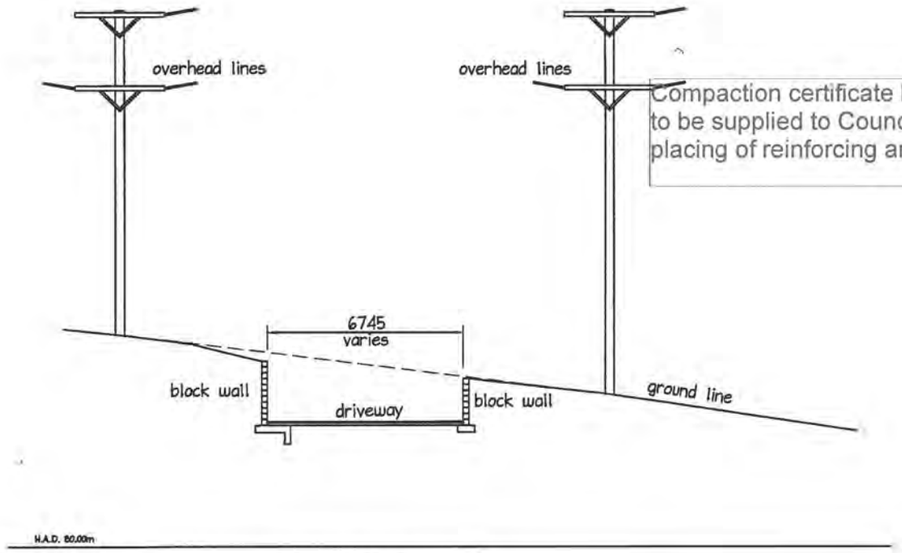

SECTION B 01
1:200

Compaction certificate by Engineer to be supplied to Council prior to placing of reinforcing and concrete

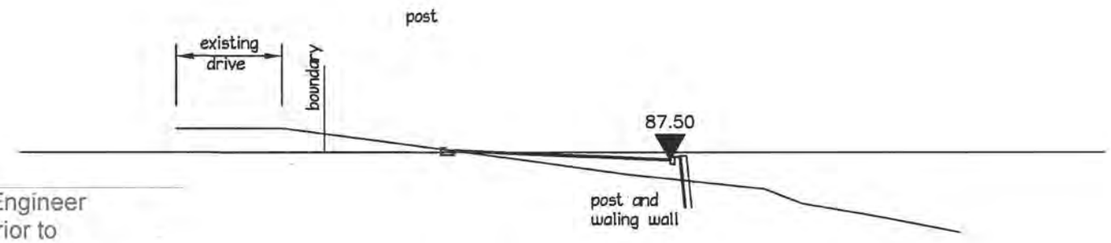

SECTION C 01
1:200

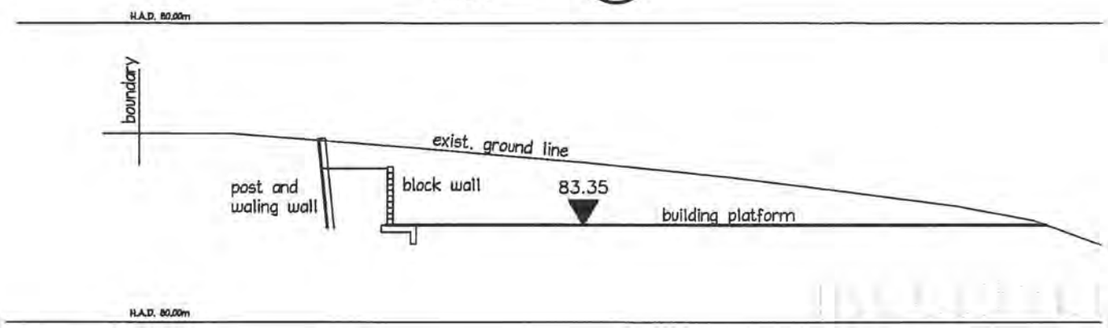

SECTION D 01
1:200

00002

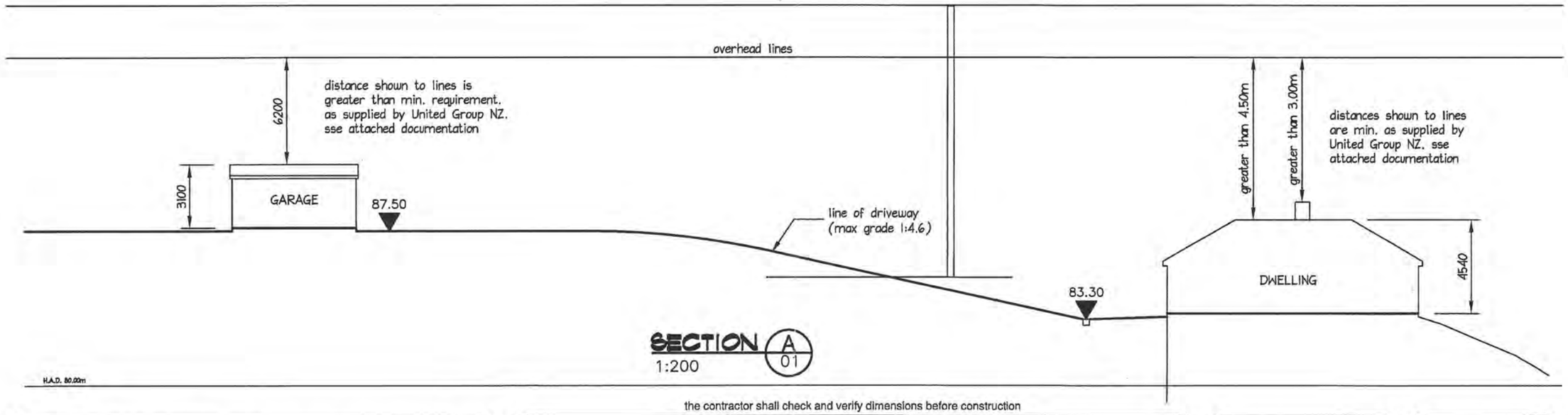

SECTION A 01
1:200

the contractor shall check and verify dimensions before construction

designscape
shark bait ltd
Civil, Structural and Building design
http://www.designscape.net.nz
email info@designscape.net.nz

Allan Pullenger AIPENZ CertETn
298 Rosetta Road
sunny Raumati

phone & fax 04 902 8528
Mob 027 442-0486

WARD HOUSE
35B KOTARE ST-WAIKANAE
PROPOSED DWELLING

scale	1:200
date	June 2011
drawn	Stuart Jackson
designed	Allan Pullenger

plan number
2690-01
Sheet 02 of 21

the water storage tank is to be topped up by a 600lt per day restricted supply from the second connection on the modified toby.No additional connections permited.Two water mains required! one for house one for the tank.

BC 110397

I recommend that the lid be secured of the water stoarge tank to prevent unauthorised access

water pipes running to w.c's and all hose taps are to be marked non potable for entire lenght

00103

No Hose Taps on the town water supply permitted

The plumber is to contact Aldrin Abad with the attached water connection form (159)when the toby is to be changed/modified 042964731 .the cost of this toby modification and any reinstatement work will be paid by the owner/agent when the invoice is sent out

Ensure that the lid of the tank is above the finished ground level

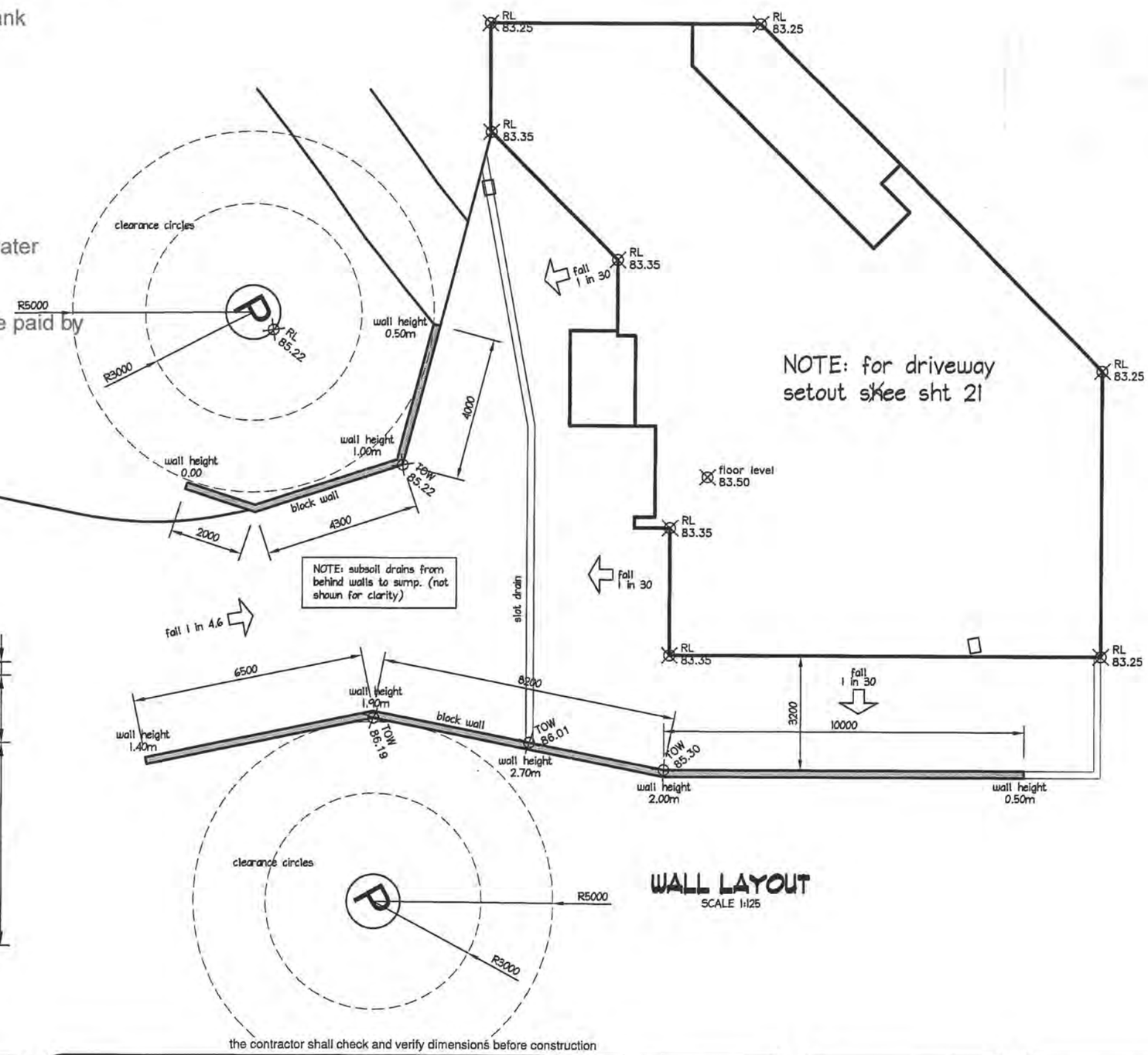

WALL LAYOUT
SCALE 1:125

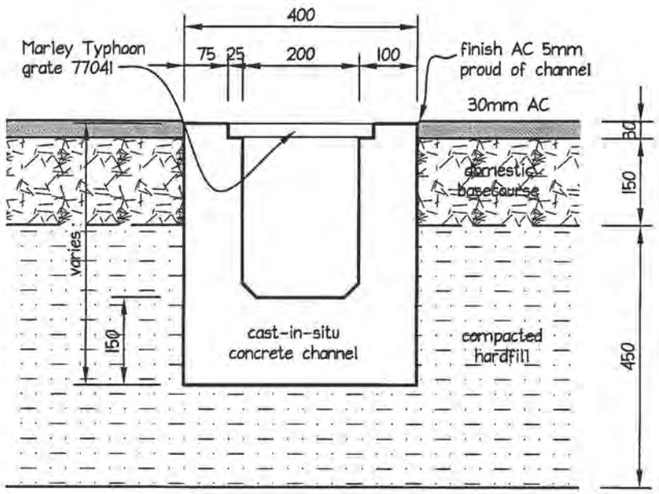

SLOT DRAIN SECTION
SCALE 1:10

the contractor shall check and verify dimensions before construction

designscape
shark bait ltd
Civil, Structural and Building design
http://www.designscape.net.nz
email info@designscape.net.nz

Allan Pullenger AIPENZ CertETn
298 Rosetta Road
sunny Raumati

phone & fax 04 902 8528
Mob 027 442-0486

WARD HOUSE
35B KOTARE ST-WAIKANAE
PROPOSED DWELLING

scale	as shown
date	June 2011
drawn	Stuart Jackson
designed	Allan Pullenger

plan number
2690-01
Sheet 03 of 21

BC 110397 Ensure that the solar tubes are sited for maximum exposure to the sun

GLAZING:
All glazing to conform to NZS 4223 Pt 3 1993.
Safety glass shall be Grade A. Toughened or Laminated.
Single paned glazed doors to be Grade A Safety glass.
New Joinery to conform to NZS 4211 based on min' 1550pa DWP for VERY HIGH WIND ZONING.
NOTE: all new windows to be double glazed Al frames with thermal breaks, arcon filled

VENTILATION:
all habitable/service rooms to have 5% of their floor area as opening windows or approved alternative, to achieve ventilation requirements.

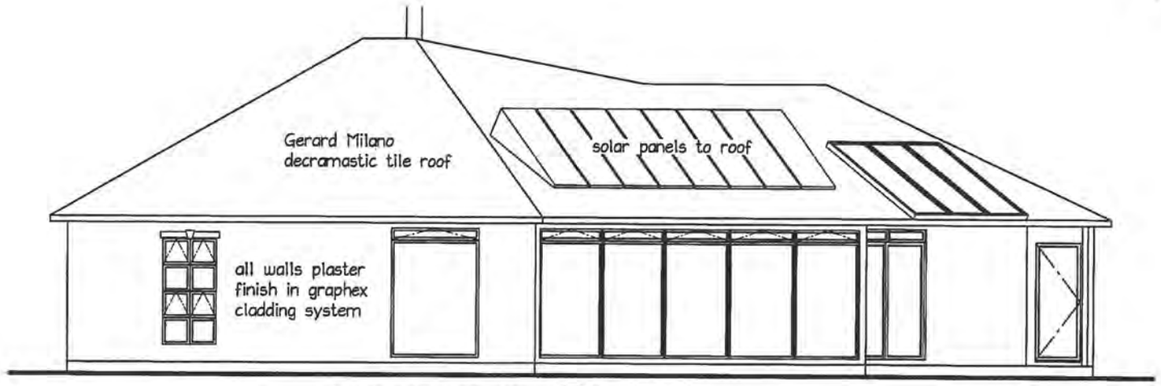

ELEVATION a
1:100

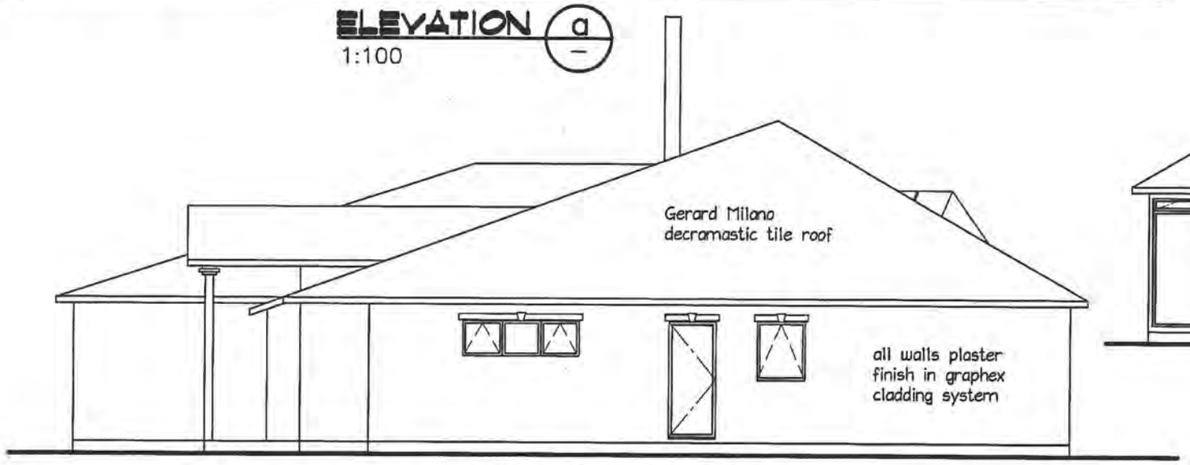

ELEVATION b
1:100

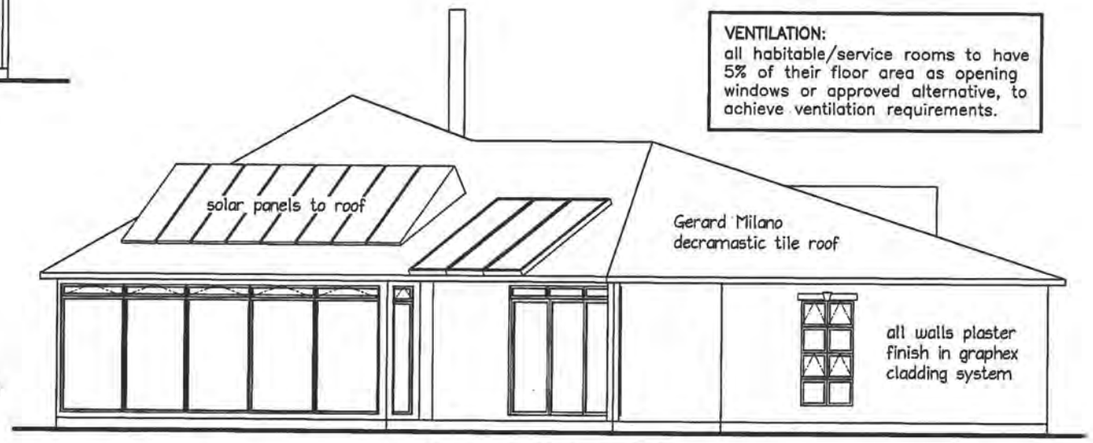

ELEVATION d
1:100

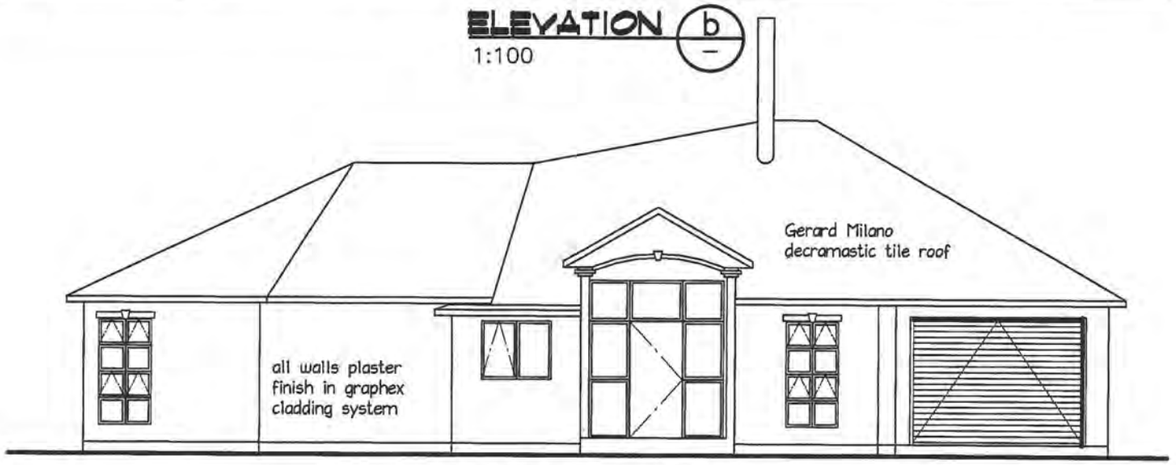

ELEVATION c
1:100

the contractor shall check and verify dimensions before construction

designscape
shark bait ltd
Civil, Structural and Building design
http://www.designscape.net.nz
email info@designscape.net.nz

Allan Pullenger AIPENZ CertETn
298 Rosetta Road
sunny Raumati

phone & fax 04 902 8528
Mob 027 442-0486

WARD HOUSE
35B KOTARE ST-WAIKANAE
PROPOSED DWELLING

scale	1:100
date	June 2011
drawn	Stuart Jackson
designed	Allan Pullenger

plan number
2690-01
Sheet 06 of 21

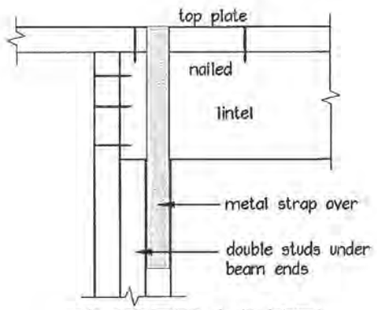

TIMBER LINTEL CONNECTION

SCALE 1:10

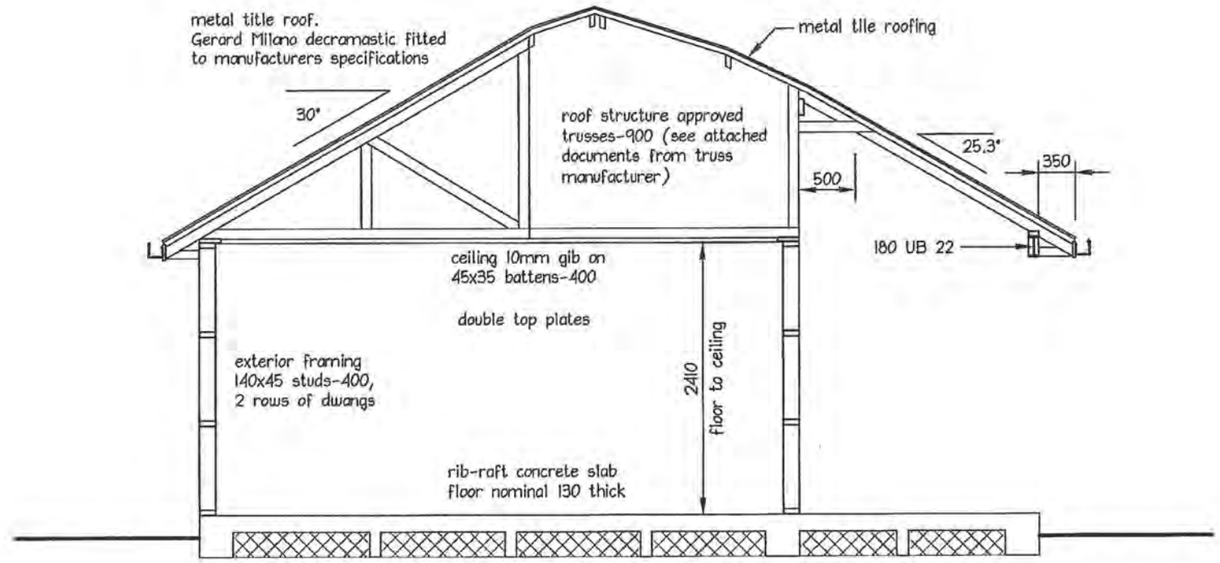

SECTION A 05

1:50

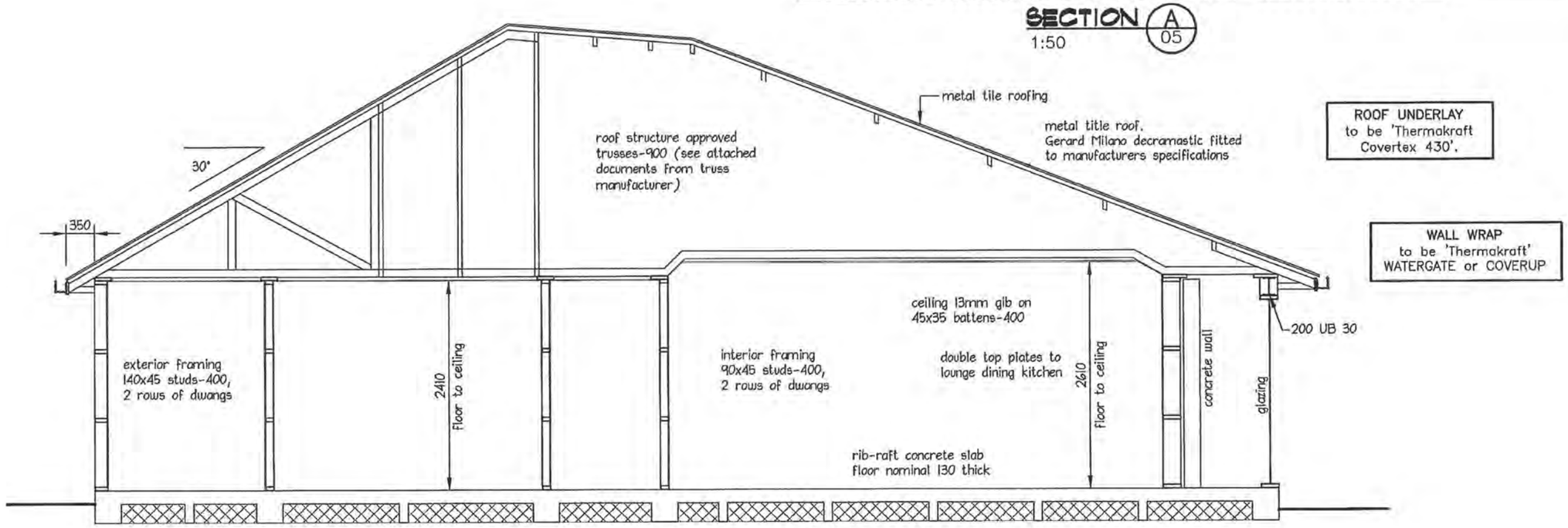

SECTION B 05

1:50

the contractor shall check and verify dimensions before construction

designscape
shark bait ltd
Civil, Structural and Building design
http://www.designscape.net.nz
email info@designscape.net.nz

Allan Pullenger AIPENZ CertETn
298 Rosetta Road
sunny Raumati

phone & fax 04 902 8528
Mob 027 442-0486

WARD HOUSE
35B KOTARE ST-WAIKANAE
PROPOSED DWELLING

scale	1:50
date	June 2011
drawn	Stuart Jackson
designed	Allan Pullenger

plan number
2690-01
Sheet 07 of 21

BC 110397

CONTROL JOINTS:
shrinkage control joints to be formed in floor slab as per section 7.5.8.6 of NZS3604:1999

CONCRETE STRENGTH:
to be 25 Mpa @ 28 days unless detail elsewhere

ground bearing must be reconfirmed on site following excavation but prior to placing of concrete and reinforcing

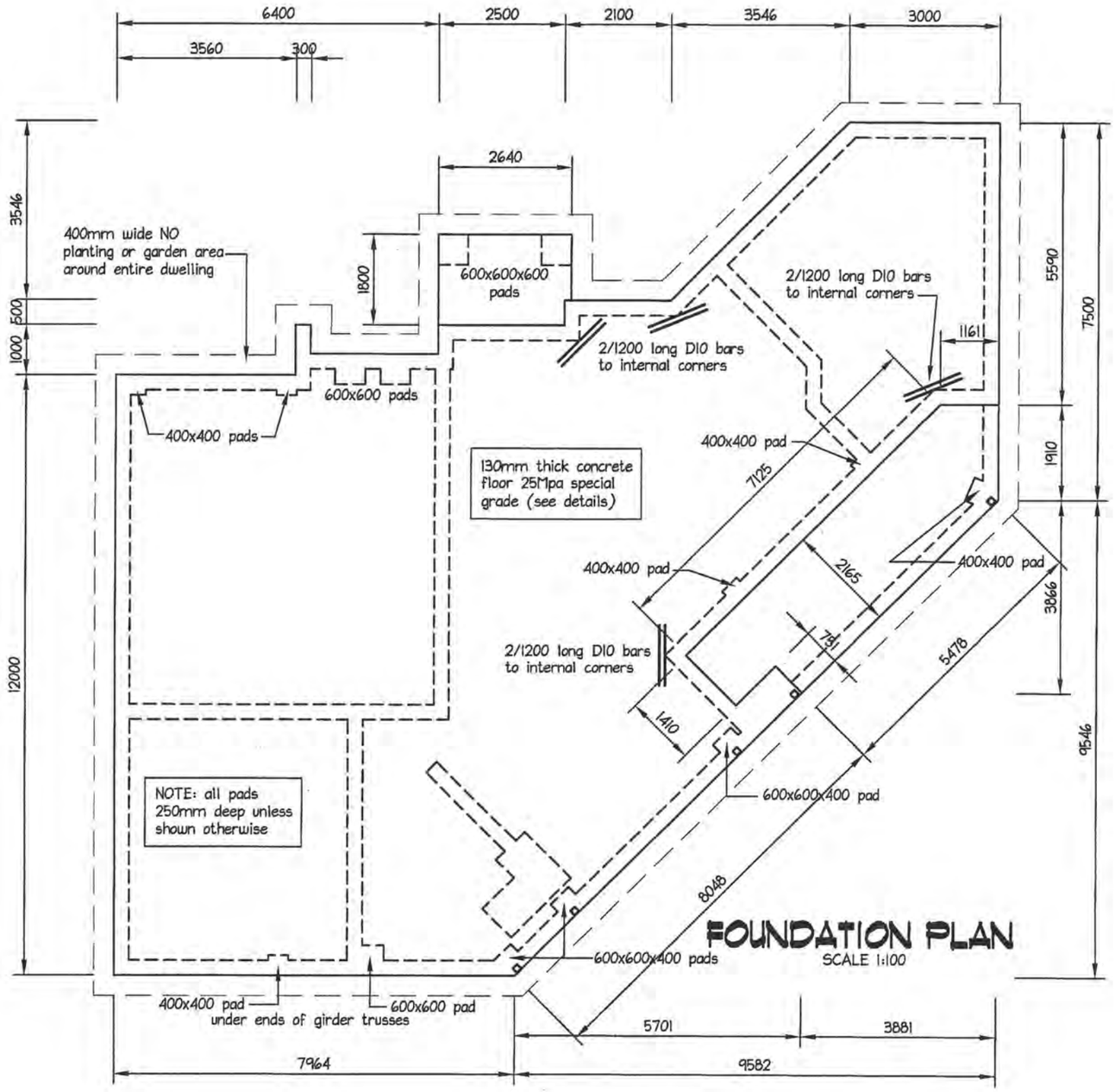

FOUNDATION PLAN

SCALE 1:100

the contractor shall check and verify dimensions before construction

designscape
shark bait ltd
Civil, Structural and Building design
http://www.designscape.net.nz
email info@designscape.net.nz

Allan Pullenger AIPENZ CertETn
298 Rosetta Road
sunny Raumati

phone & fax 04 902 8528
Mob 027 442-0486

WARD HOUSE
35B KOTARE ST-WAIKANAE
PROPOSED DWELLING

scale	1:100
date	June 2011
drawn	Stuart Jackson
designed	Allan Pullenger

plan number
2690-01
Sheet 08 of 21

BC 110397

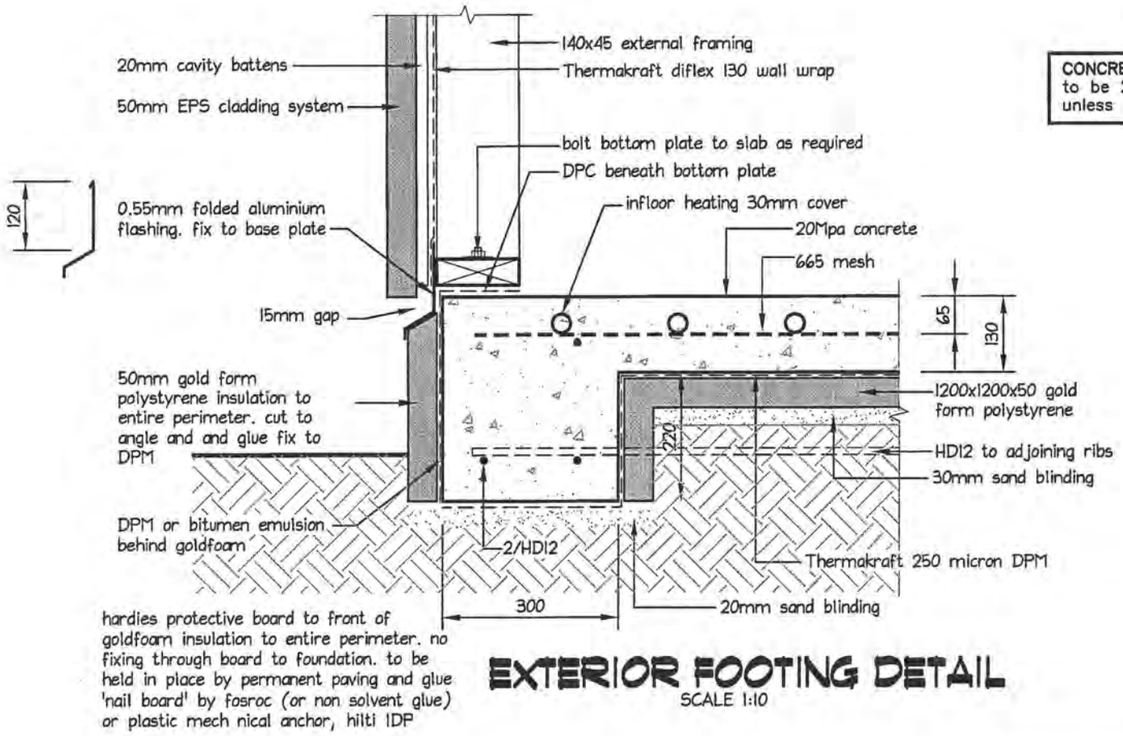

EXTERIOR FOOTING DETAIL
SCALE 1:10

CONCRETE STRENGTH:
to be 25 Mpa @ 28 days
unless detail elsewhere

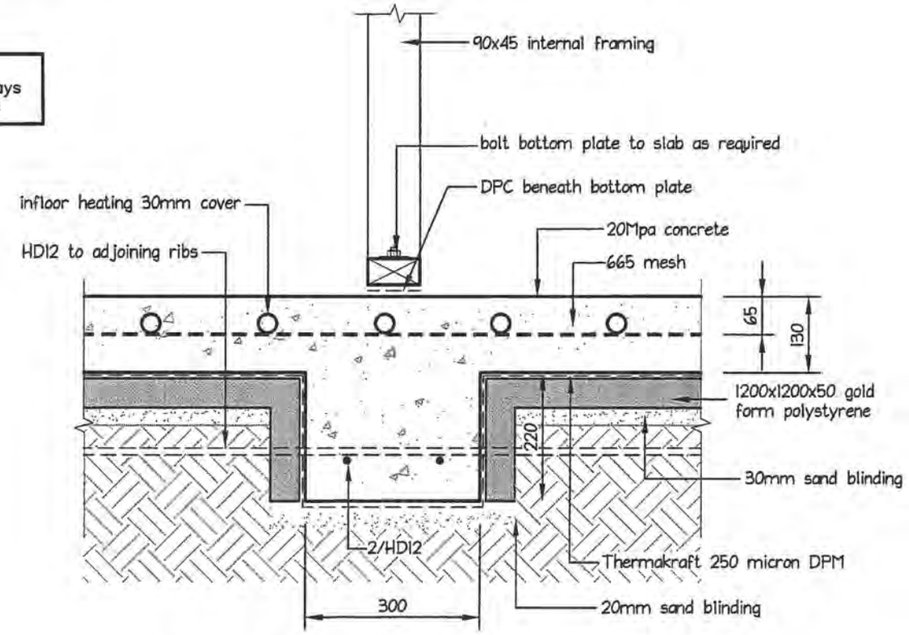

INTERIOR FOOTING DETAIL
SCALE 1:10

REINFORCING STEEL LAP:
D10 = 400 mm : HD10 = 700 mm
D12 = 480 mm : HD12 = 840 mm
D16 = 640 mm : HD16 = 1120 mm
D20 = 800 mm : HD20 = 1400 mm

REINFORCING STEEL BENDS:
D10 = min 50mmø & min 40mm for stirrups
D12 – min 60mmø & min 48mmø for stirrups
D16 = min 80mmø
REFER ALSO TO NZS3101 for clarity

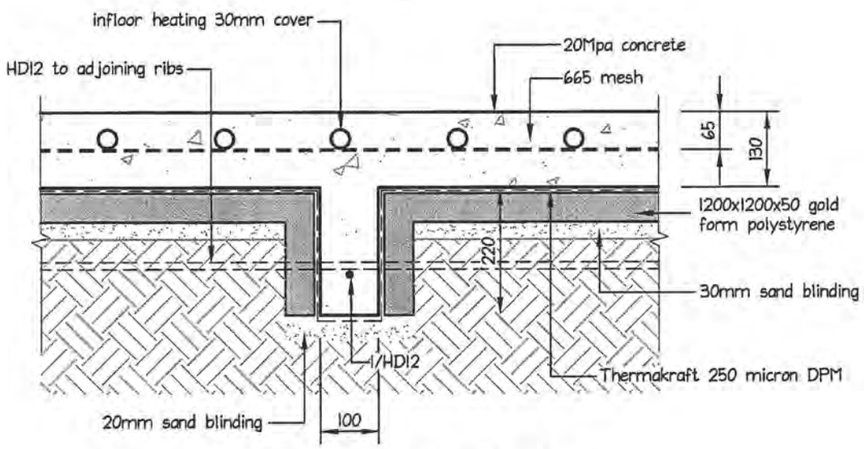

INTERMEDIATE RIB DETAIL
SCALE 1:10

00109

the contractor shall check and verify dimensions before construction

designscape
shark bait ltd
Civil, Structural and Building design
http://www.designscape.net.nz
email info@designscape.net.nz

Allan Pullenger AIPENZ CertETn
298 Rosetta Road
sunny Raumati

phone & fax 04 902 8528
Mob 027 442-0486

WARD HOUSE
35B KOTARE ST-WAIKANAE
PROPOSED DWELLING

scale	1:10
date	June 2011
drawn	Stuart Jackson
designed	Allan Pullenger

plan number
2690-01
Sheet 09 of 21

BC 110397

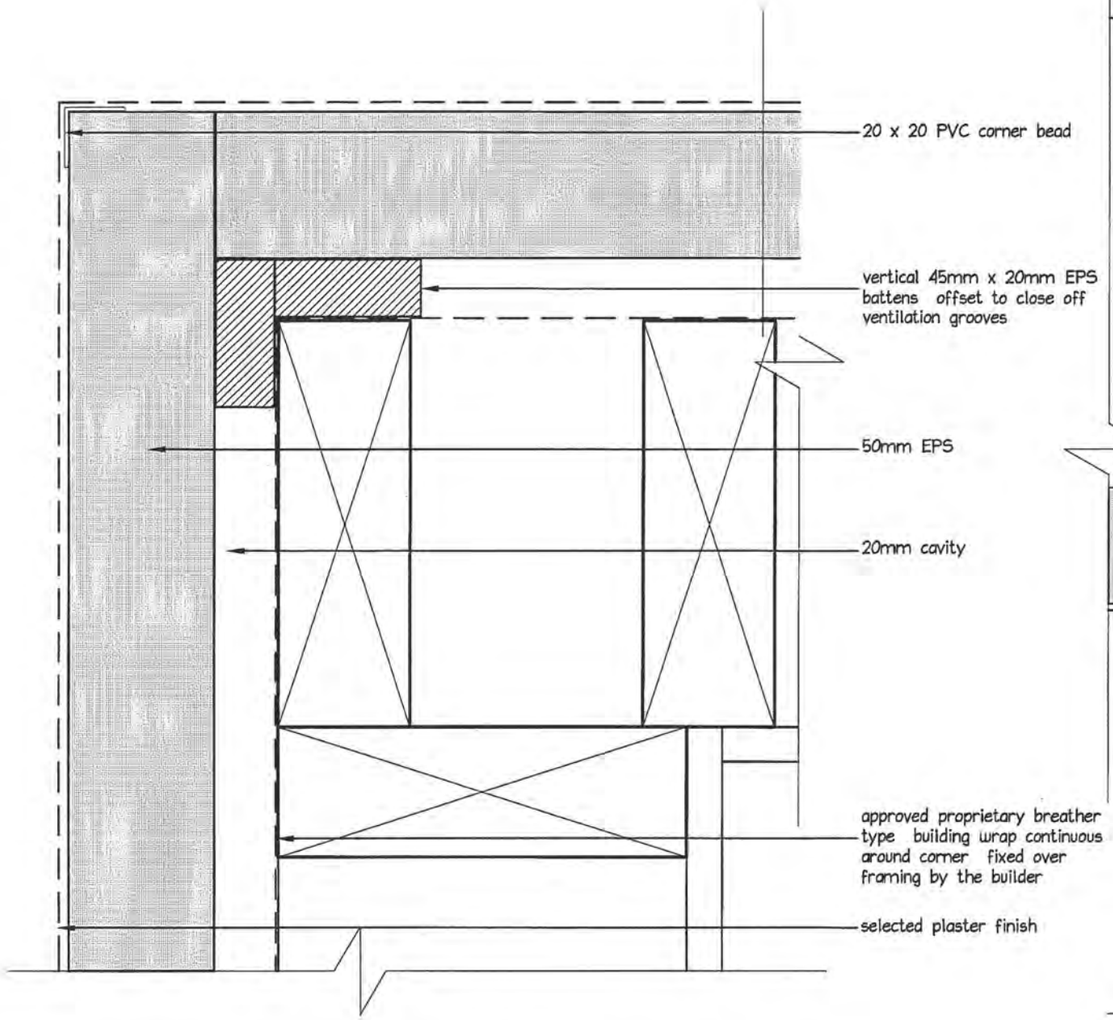

EXTERNAL CORNER DETAIL

SCALE 1:2

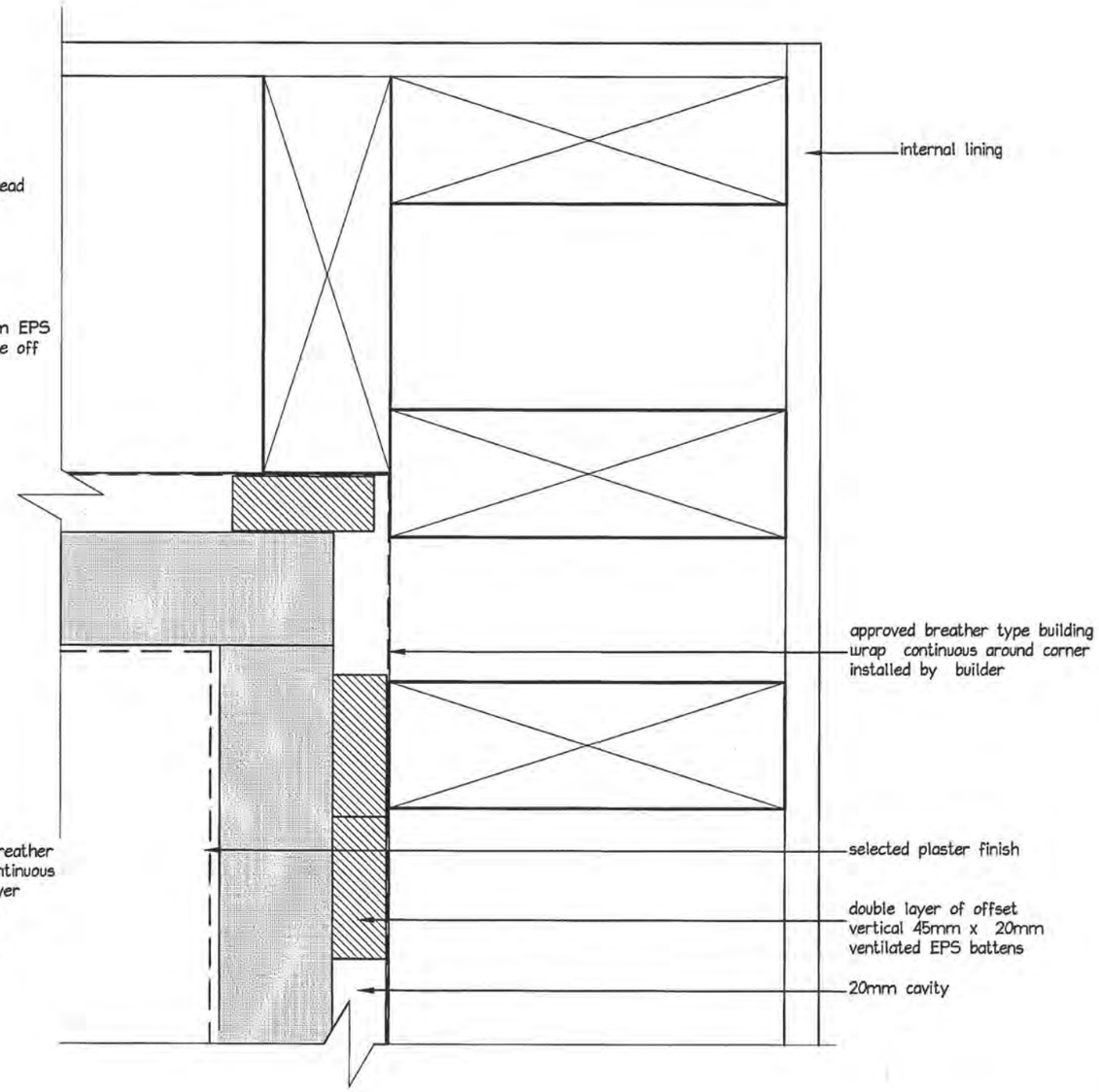

INTERNAL CORNER DETAIL

SCALE 1:2

00010

the contractor shall check and verify dimensions before construction

designscape
shark bait ltd
Civil, Structural and Building design
http://www.designscape.net.nz
email info@designscape.net.nz

Allan Pullenger AIPENZ CertETn
298 Rosetta Road
sunny Raumati

phone & fax 04 902 8528
Mob 027 442-0486

WARD HOUSE
35B KOTARE ST-WAIKANAE
PROPOSED DWELLING

scale	1:2
date	June 2011
drawn	Stuart Jackson
designed	Allan Pullenger

plan number
2690-01
Sheet 10 of 21

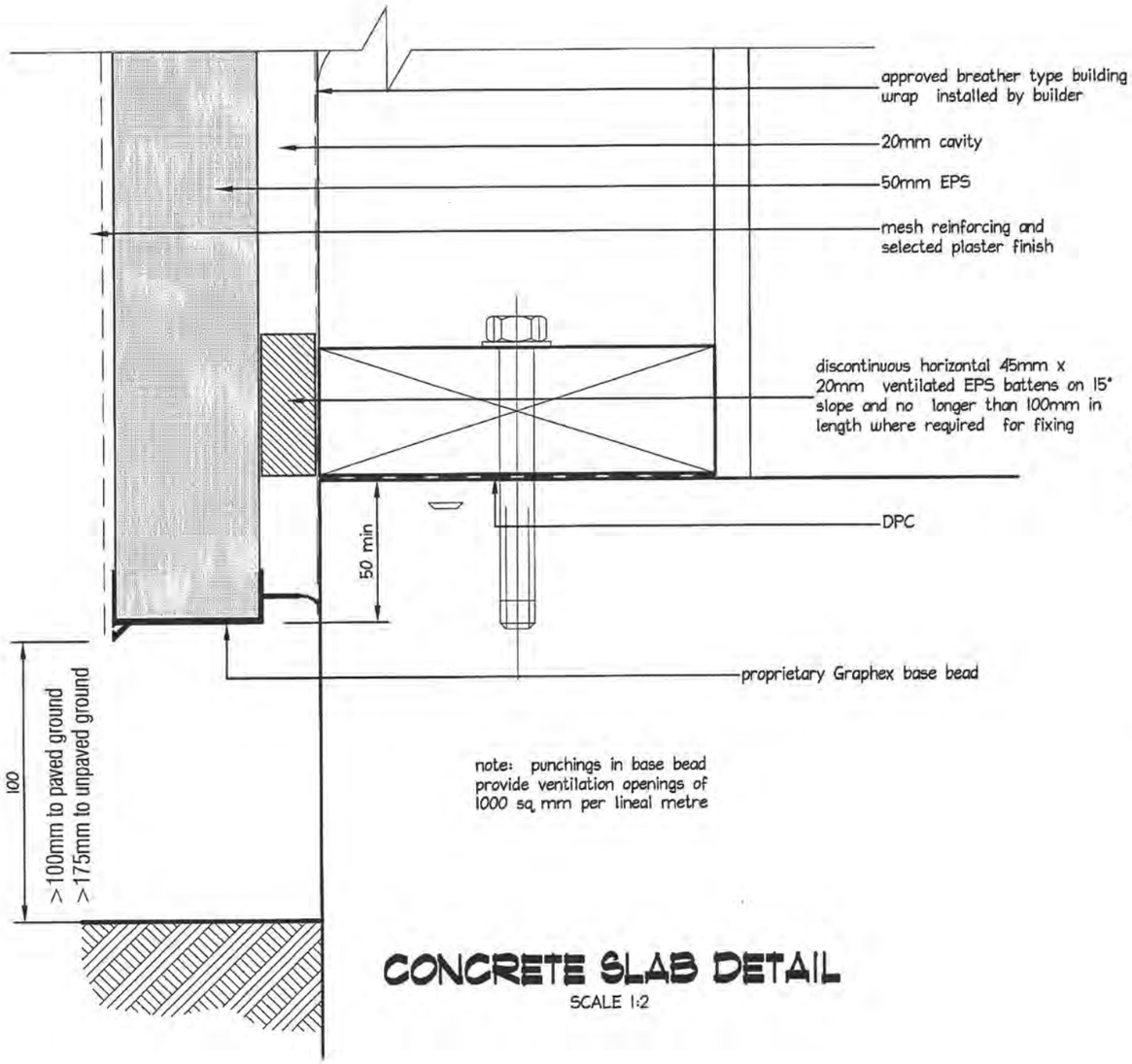

CONCRETE SLAB DETAIL

SCALE 1:2

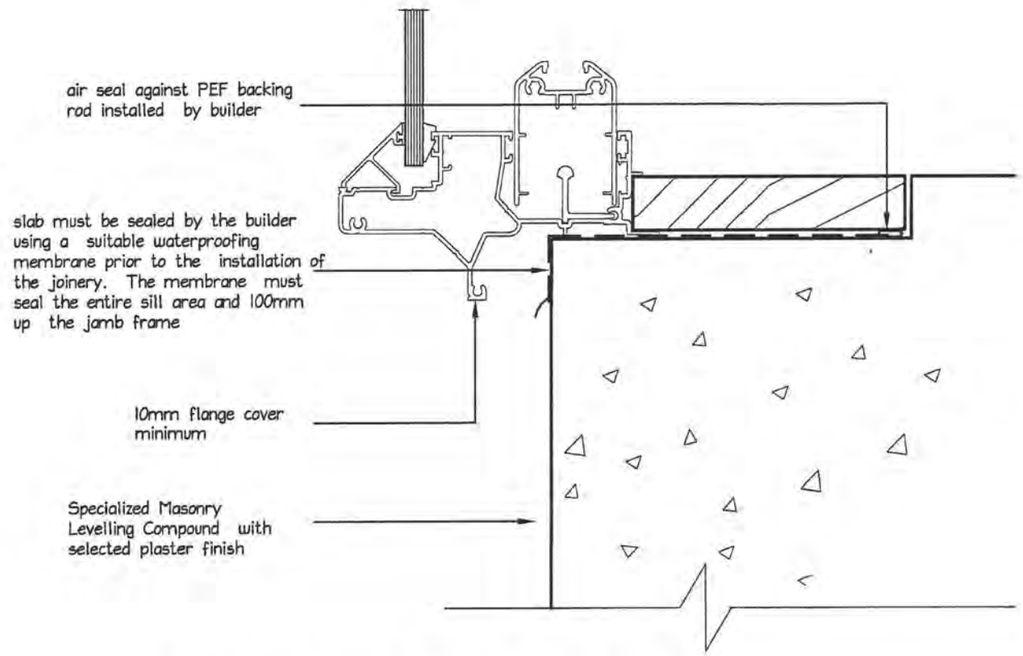

DOOR SILL CONCRETE DETAIL

SCALE 1:2

the contractor shall check and verify dimensions before construction

designscape
shark bait ltd
Civil, Structural and Building design
http://www.designscape.net.nz
email info@designscape.net.nz

Allan Pullenger AIPENZ CertETn
298 Rosetta Road
sunny Raumati

phone & fax 04 902 8528
Mob 027 442-0486

WARD HOUSE
35B KOTARE ST-WAIKANAE
PROPOSED DWELLING

scale	1:2
date	June 2011
drawn	Stuart Jackson
designed	Allan Pullenger

plan number
2690-01
Sheet 11 of 21

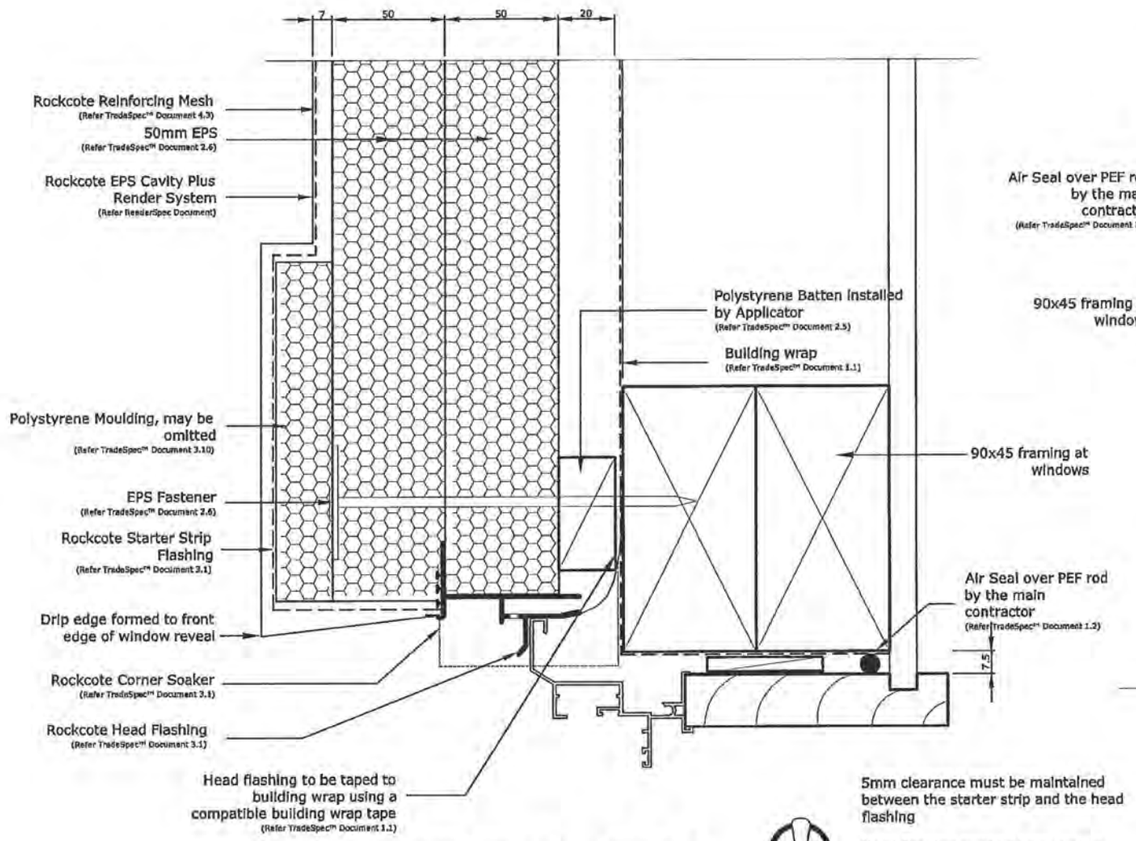

WINDOW HEAD FLASHING

SCALE 1:2

5mm clearance must be maintained between the starter strip and the head flashing

Head flashing must be taped to the Building Wrap by the main contractor/window installer

Head Flashing to have a minimum 15° fall

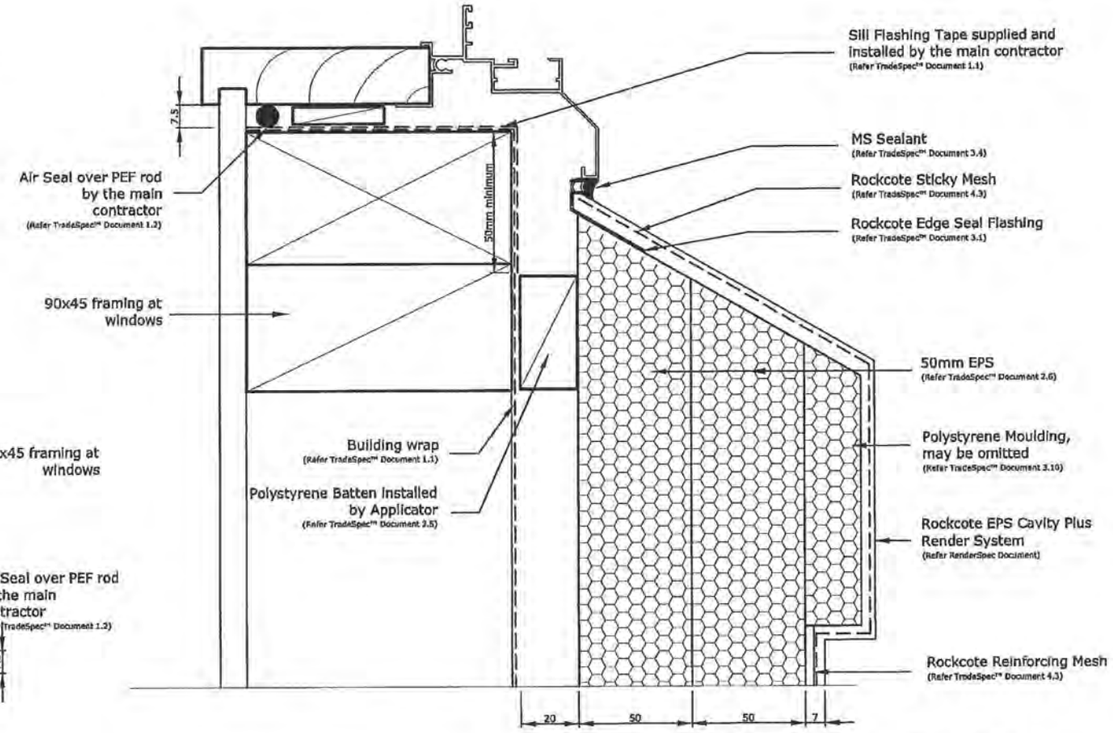

Allow a 25mm Gap between the back of the joinery and external facing timber framing to allow the sill flashing to fit.

WINDOW SILL FLASHING

SCALE 1:2

the contractor shall check and verify dimensions before construction

designscape
shark bait ltd
Civil, Structural and Building design
http://www.designscape.net.nz
email info@designscape.net.nz

Allan Pullenger AIPENZ CertETn
298 Rosetta Road
sunny Raumati

phone & fax 04 902 8528
Mob 027 442-0486

WARD HOUSE
35B KOTARE ST-WAIKANAE
PROPOSED DWELLING

scale	1:2
date	June 2011
drawn	Stuart Jackson
designed	Allan Pullenger

plan number
2690-01
Sheet 12 of 21

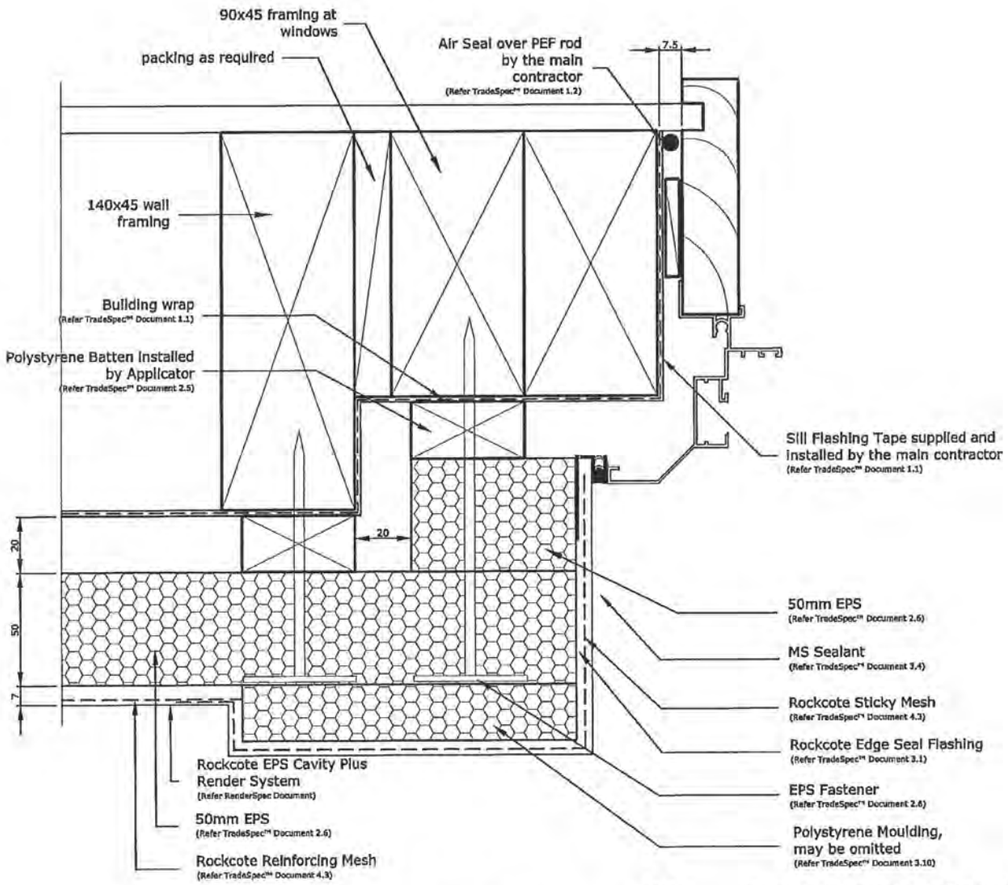

WINDOW JAMB FLASHING

SCALE 1:2

Allow a 25mm Gap between the back of the joinery and external facing timber framing to allow the jamb flashing to fit.

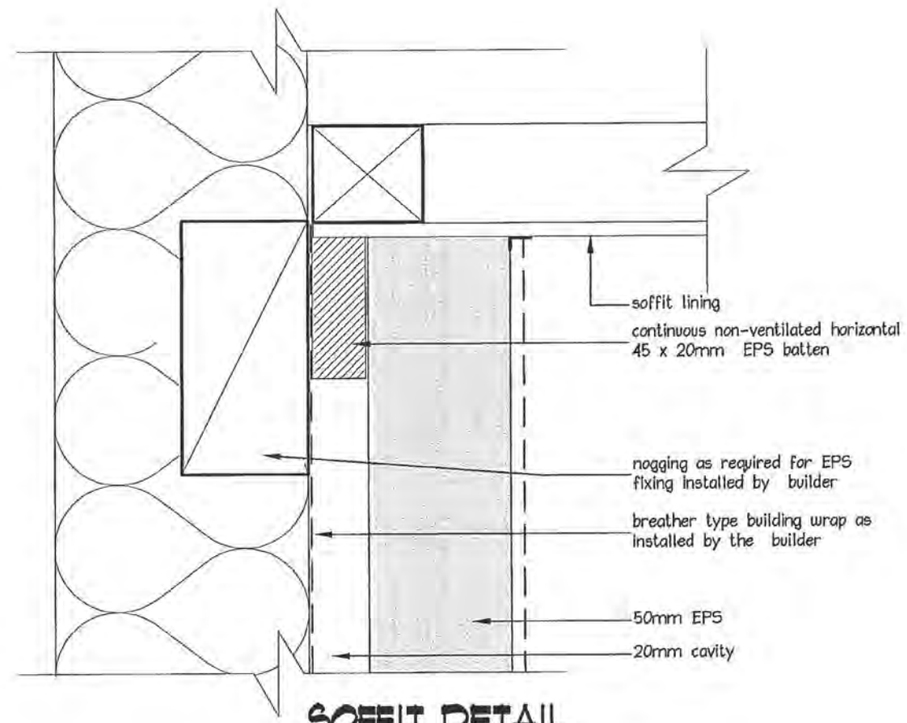

SOFFIT DETAIL

SCALE 1:2

NOTE: two layers of EPS above windows

the contractor shall check and verify dimensions before construction

designscape
shark bait ltd
Civil, Structural and Building design
http://www.designscape.net.nz
email info@designscape.net.nz

Allan Pullenger AIPENZ CertETn
298 Rosetta Road
sunny Raumati

phone & fax 04 902 8528
Mob 027 442-0486

WARD HOUSE
35B KOTARE ST-WAIKANAE
PROPOSED DWELLING

scale	1:2
date	June 2011
drawn	Stuart Jackson
designed	Allan Pullenger

plan number
2690-01
Sheet 13 of 21

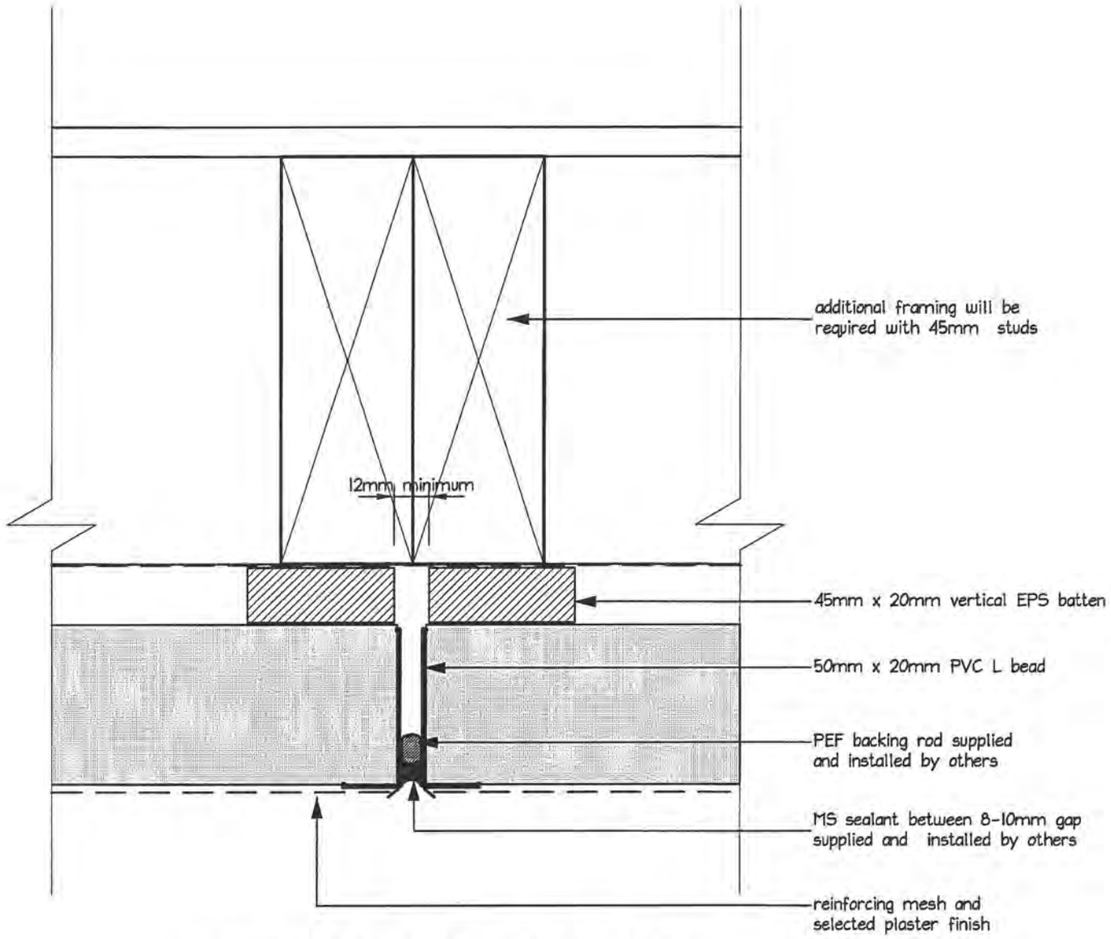

VERTICAL CONTROL JOINT

SCALE 1:2

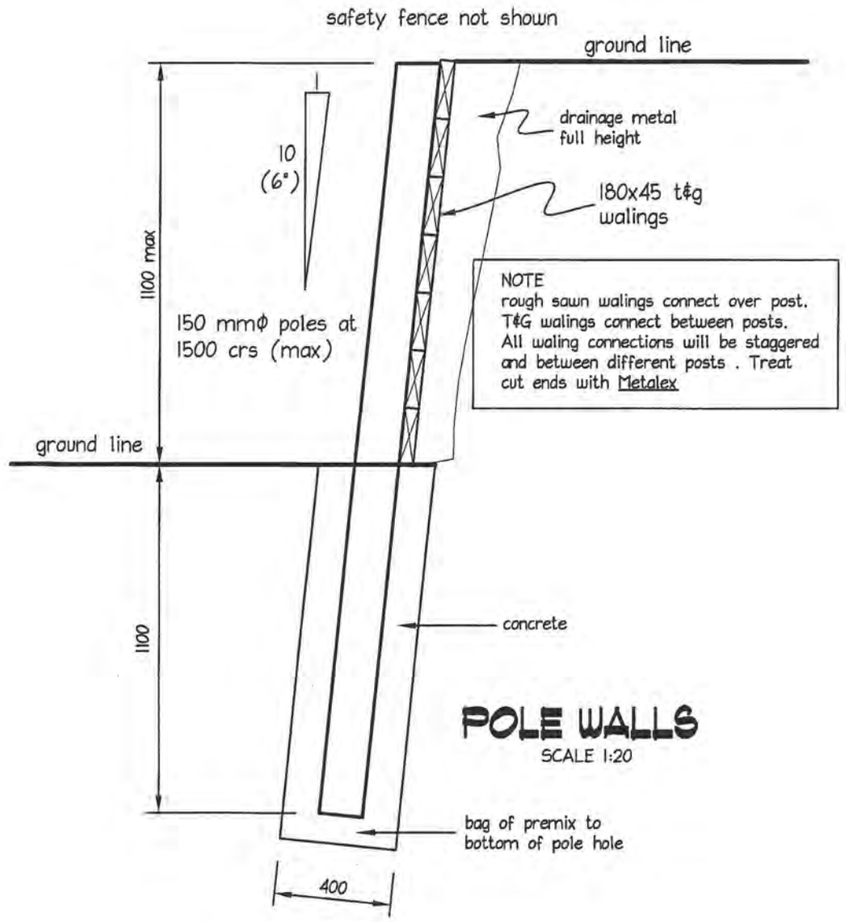

POLE WALLS

SCALE 1:20

00014

the contractor shall check and verify dimensions before construction

designscape
shark bait ltd
Civil, Structural and Building design
http://www.designscape.net.nz
email info@designscape.net.nz

Allan Pullenger AIPENZ CertETn
298 Rosetta Road
sunny Raumati

phone & fax 04 902 8528
Mob 027 442-0486

WARD HOUSE
35B KOTARE ST-WAIKANAE
PROPOSED DWELLING

scale	as shown
date	June 2011
drawn	Stuart Jackson
designed	Allan Pullenger

plan number
2690-01
Sheet 14 of 21

BC 110397

SPECIFICATION:
1) Concrete is 25 Mpa special grade
2) Reinforcing free of scale and rust
3) Subsoil pipe to be 100mm to approved outlet.
4) Drainage metal and fill behind wall, compacted to 300 Kpa.
5) Allow 7 days between concrete infilling of wall and backfilling.
6) Footing to solid bearing.
7) Fix reinforcing to correct spacing.
8) Upper vertical steel non aligned with base steel, will be full wall height.
9) Steel laps....Grade 500 (HD) = 70 diameters
Grade 300 (D) = 40 diameters
10) Three coats mulseal, then dampstop, then 30mm polystyrene

All blocks solid filled with concrete

REINFORCEMENT BENDS:
stirrups, 4 bar diameters
longitudinal bars, 5 bar diameters

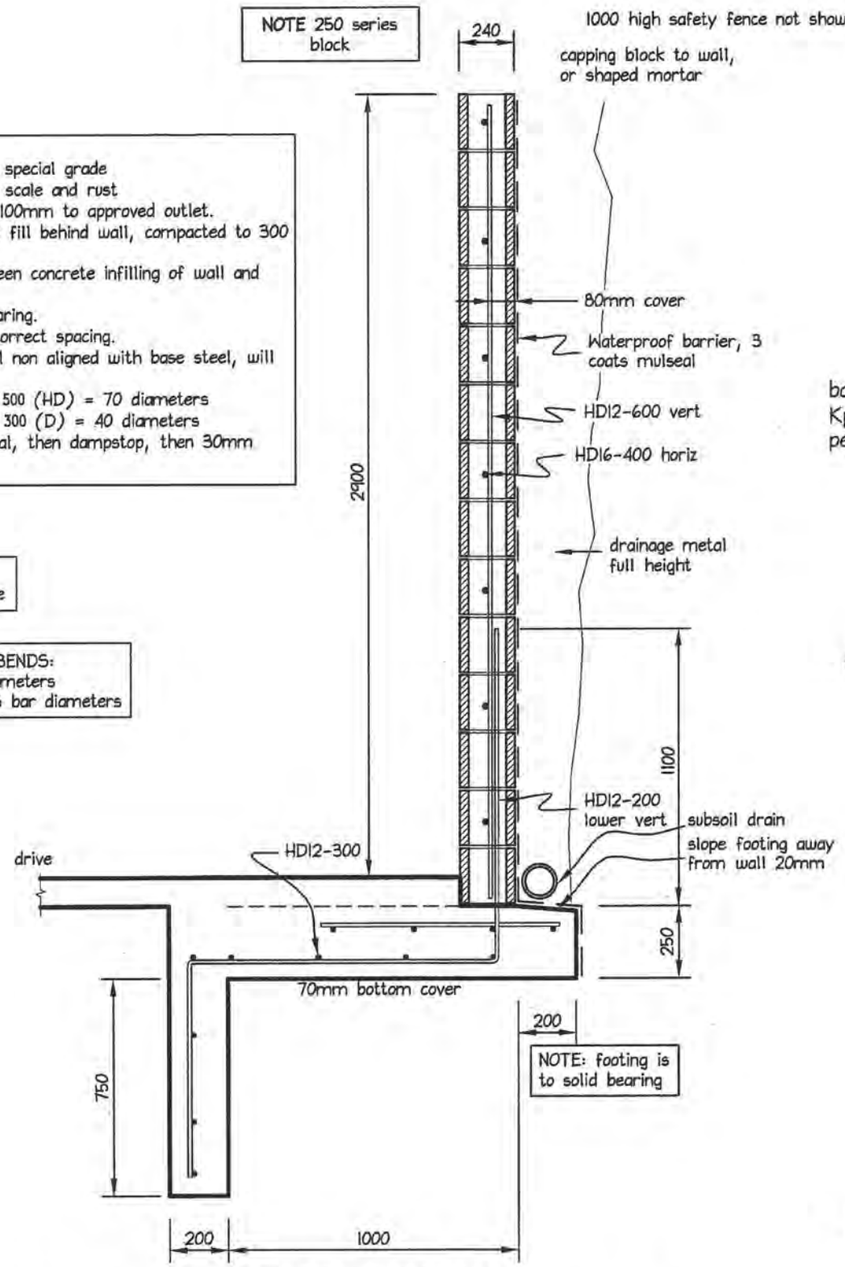

DO NOT SCALE FROM THIS DRAWING

25 SERIES BLOCK WALL WITH TOE

SCALE 1:20

backfill to be compacted to 100 Kpa, being greater than 2 blows per 50mm of penetrometer

drive walls

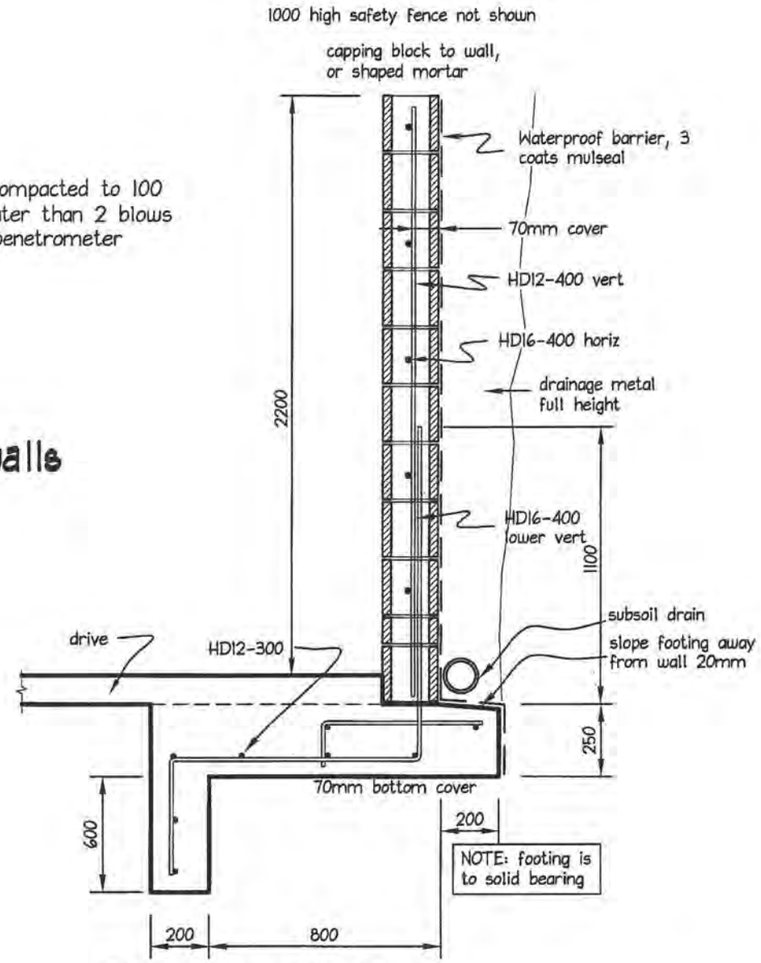

DO NOT SCALE FROM THIS DRAWING

20 SERIES BLOCK WALL WITH TOE

SCALE 1:20

00/15

the contractor shall check and verify dimensions before construction

designscape
shark bait ltd
Civil, Structural and Building design
http://www.designscape.net.nz
email info@designscape.net.nz

Allan Pullenger AIPENZ CertETn
298 Rosetta Road
sunny Raumati

phone & fax 04 902 8528
Mob 027 442-0486

WARD HOUSE
35B KOTARE ST-WAIKANAE
PROPOSED DWELLING

scale	1:20
date	June 2011
drawn	Stuart Jackson
designed	Allan Pullenger

plan number
2690-01
Sheet 15 of 21

drive walls

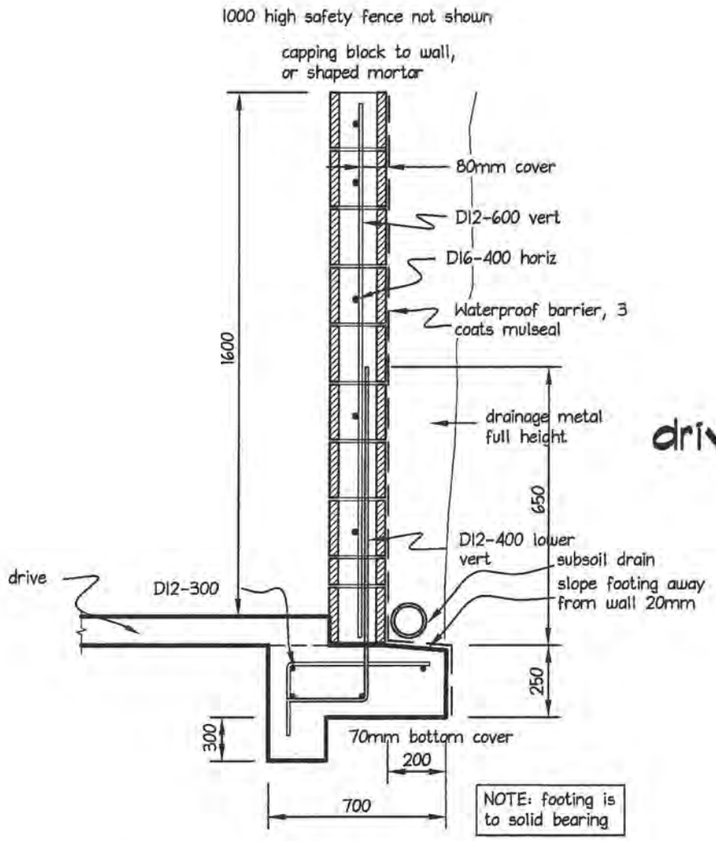

DO NOT SCALE FROM THIS DRAWING

20 SERIES BLOCK WALL WITH TOE

SCALE 1:20

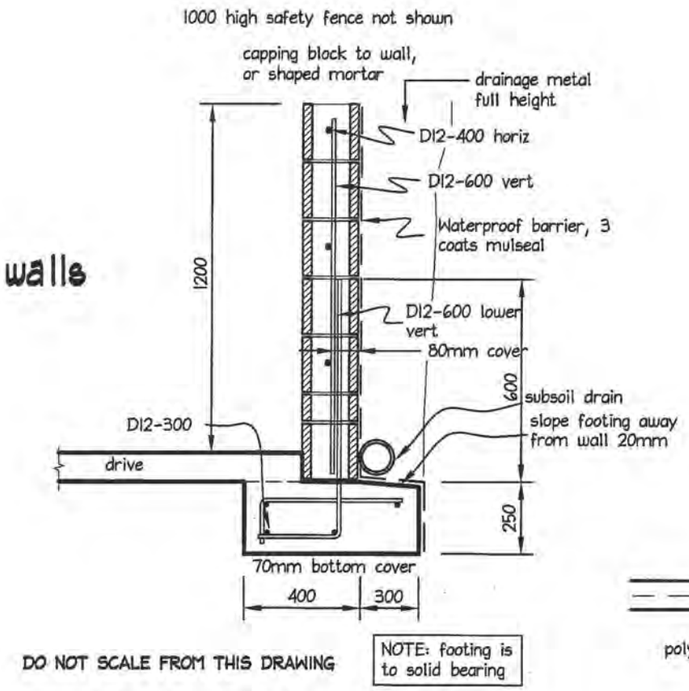

DO NOT SCALE FROM THIS DRAWING

20 SERIES BLOCK WALL

SCALE 1:20

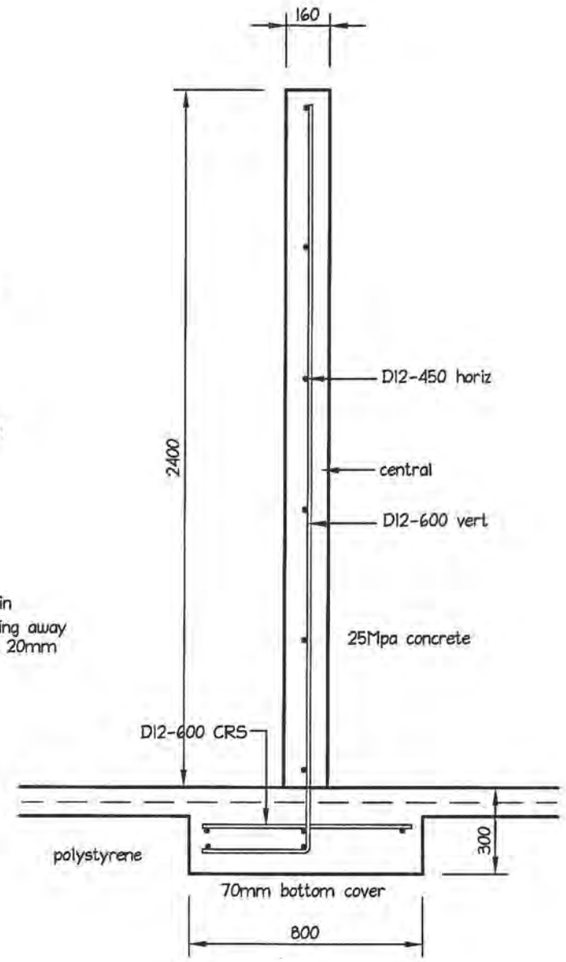

2400 INTERNAL CONCRETE WALLS

SCALE 1:20

00/16

the contractor shall check and verify dimensions before construction

designscape
shark bait ltd
Civil, Structural and Building design
http://www.designscape.net.nz
email info@designscape.net.nz

Allan Pullenger AIPENZ CertETn
298 Rosetta Road
sunny Raumati

phone & fax 04 902 8528
Mob 027 442-0486

WARD HOUSE
35B KOTARE ST-WAIKANAE
PROPOSED DWELLING

scale	1:20
date	June 2011
drawn	Stuart Jackson
designed	Allan Pullenger

plan number
2690-01
Sheet 16 of 21

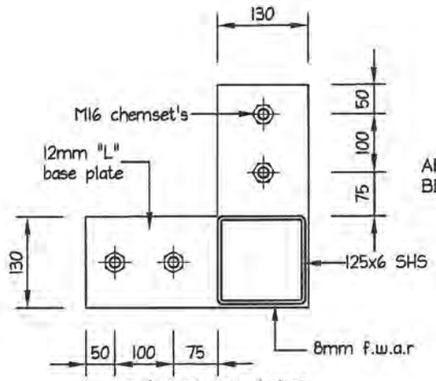

BASE PLATE

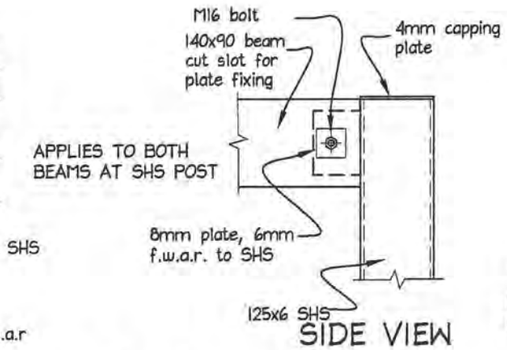

SIDE VIEW

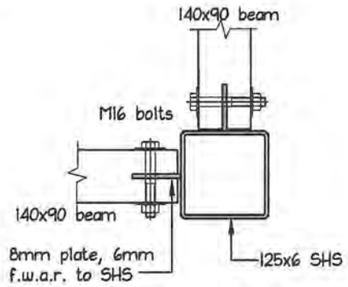

PLAN VIEW

BEAM 7 to SHS

SCALE 1:10

BOLT FIXING:
all nuts and bolts to have 50x50x5 washers when in contact with timber

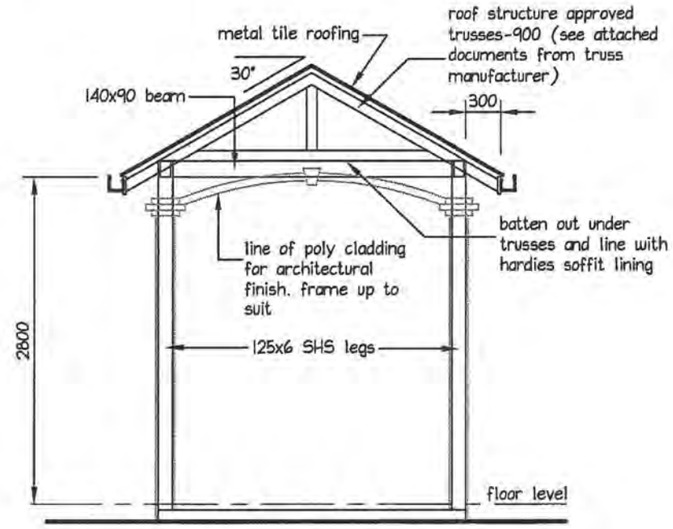

SECTION C

1:50

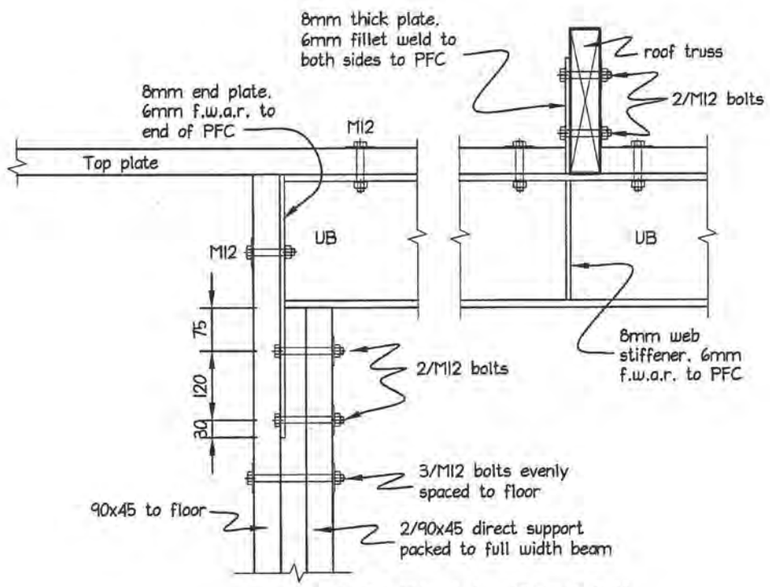

UB TO WALL DETAIL

SCALE 1:10

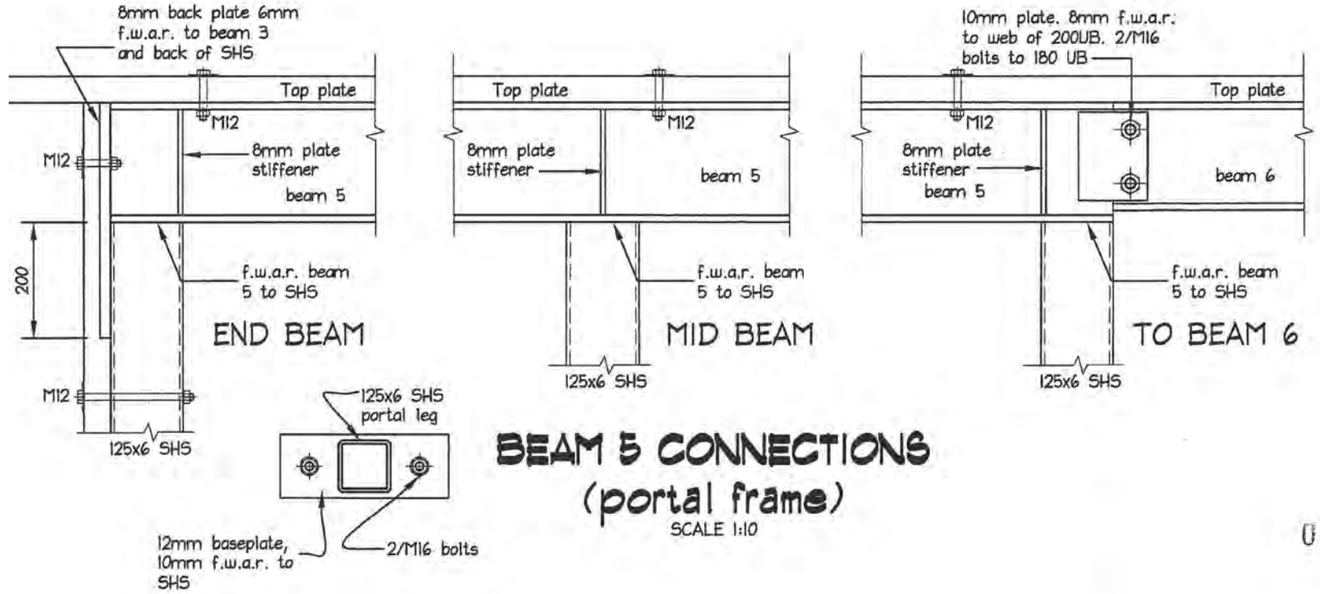

BEAM 5 CONNECTIONS (portal frame)

SCALE 1:10

00017

the contractor shall check and verify dimensions before construction

designscape
shark bait ltd
Civil, Structural and Building design
http://www.designscape.net.nz
email info@designscape.net.nz

Allan Pullenger AIPENZ CertETn
298 Rosetta Road
sunny Raumati

phone & fax 04 902 8528
Mob 027 442-0486

WARD HOUSE
35B KOTARE ST-WAIKANAE
PROPOSED DWELLING

scale	as shown
date	June 2011
drawn	Stuart Jackson
designed	Allan Pullenger

plan number 2690-01

Sheet 17 of 21

STEEL BEAMS
steel beams, portal frames and the like exact dimensions to be confirmed on site and in conjunction with architectural drawings

LINTEL TABLE (MSG 8)	
SPAN	Size
up to 1000	90x90
up to 2000	190x90
up to 2800	240x90
3000	290x90

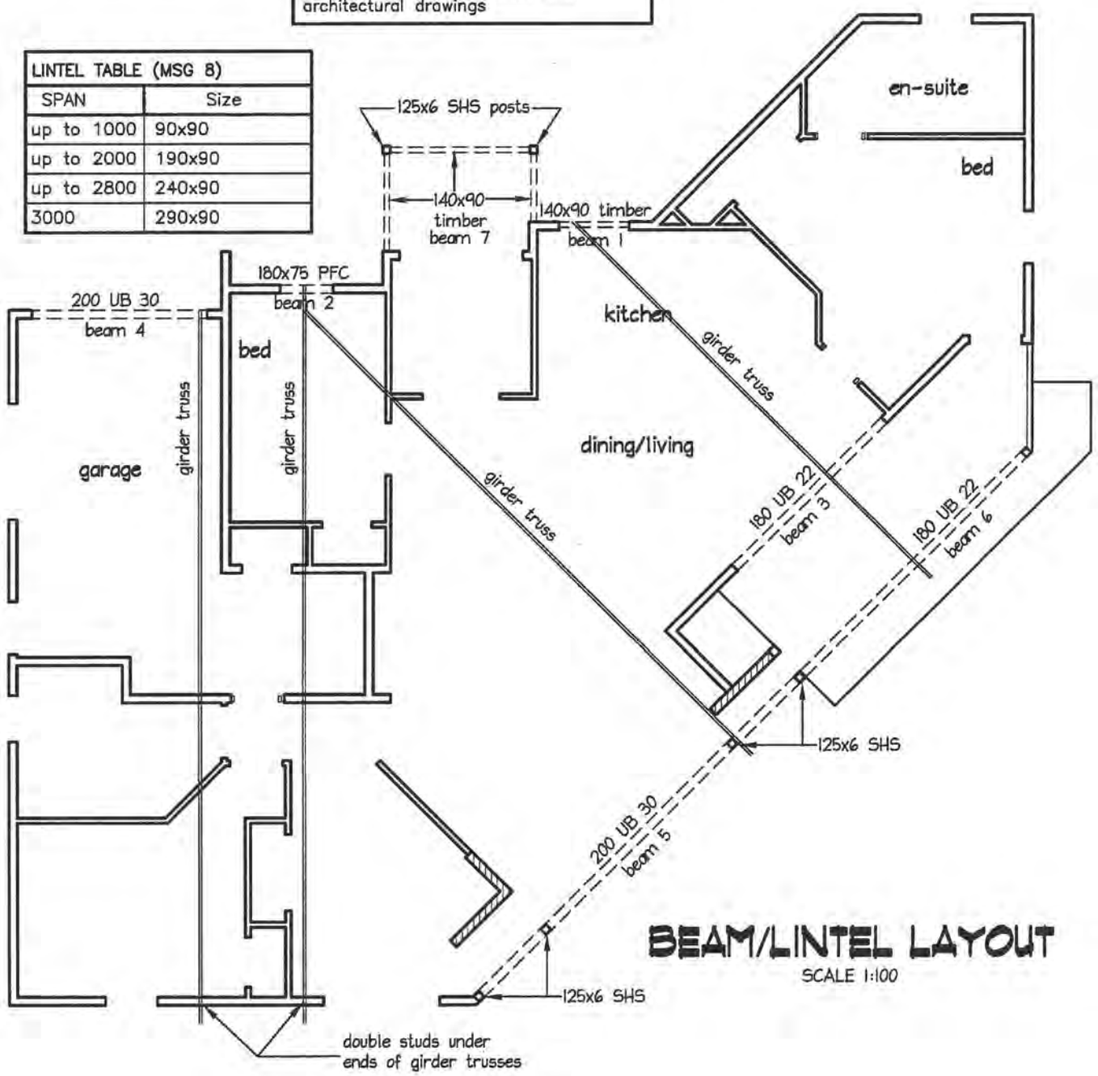

BEAM/LINTEL LAYOUT
SCALE 1:100

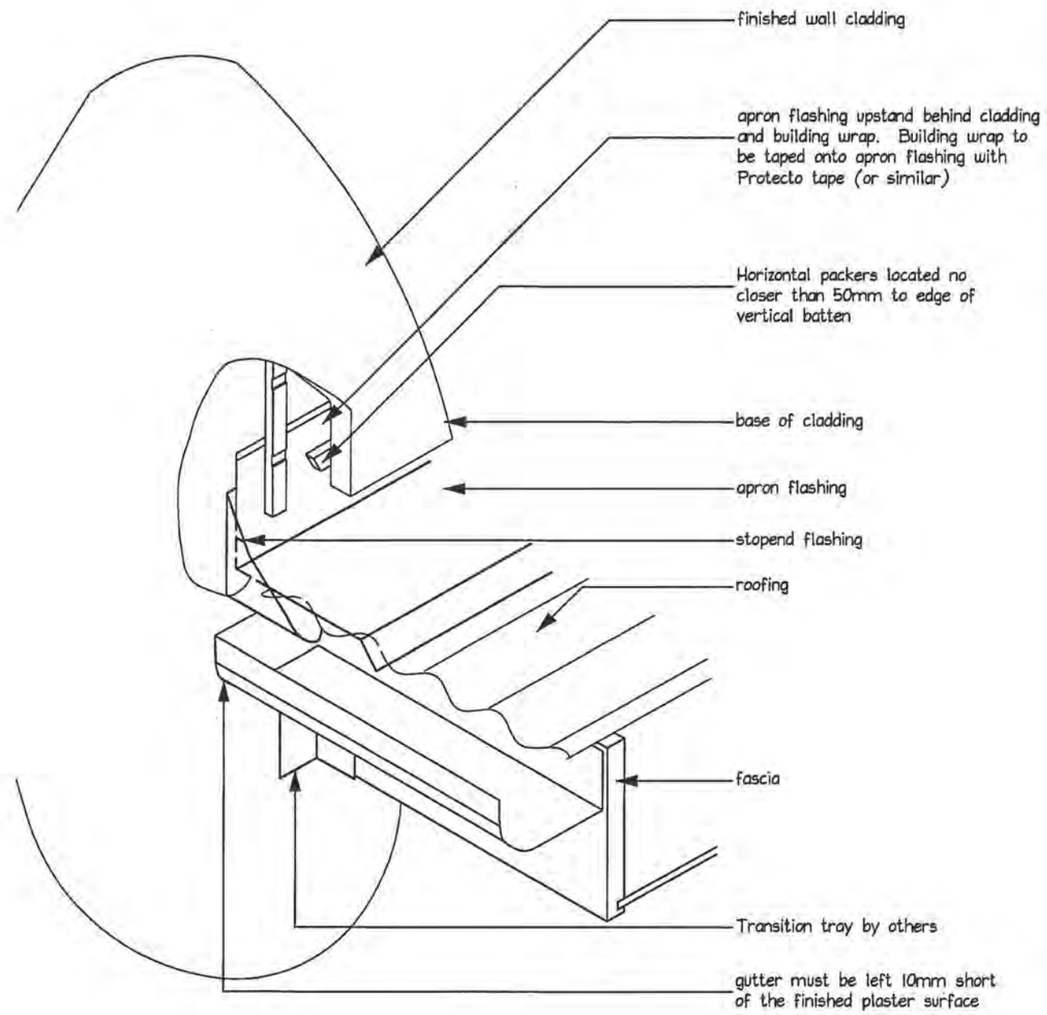

ROOF KICK OUT FLASHING
SCALE 1:5

the contractor shall check and verify dimensions before construction

designscape
shark bait ltd
Civil, Structural and Building design
http://www.designscape.net.nz
email info@designscape.net.nz

Allan Pullenger AIPENZ CertETn
298 Rosetta Road
sunny Raumati

phone & fax 04 902 8528
Mob 027 442-0486

WARD HOUSE
35B KOTARE ST-WAIKANAE
PROPOSED DWELLING

scale	1:100
date	June 2011
drawn	Stuart Jackson
designed	Allan Pullenger

plan number
2690-01
Sheet 18 of 21

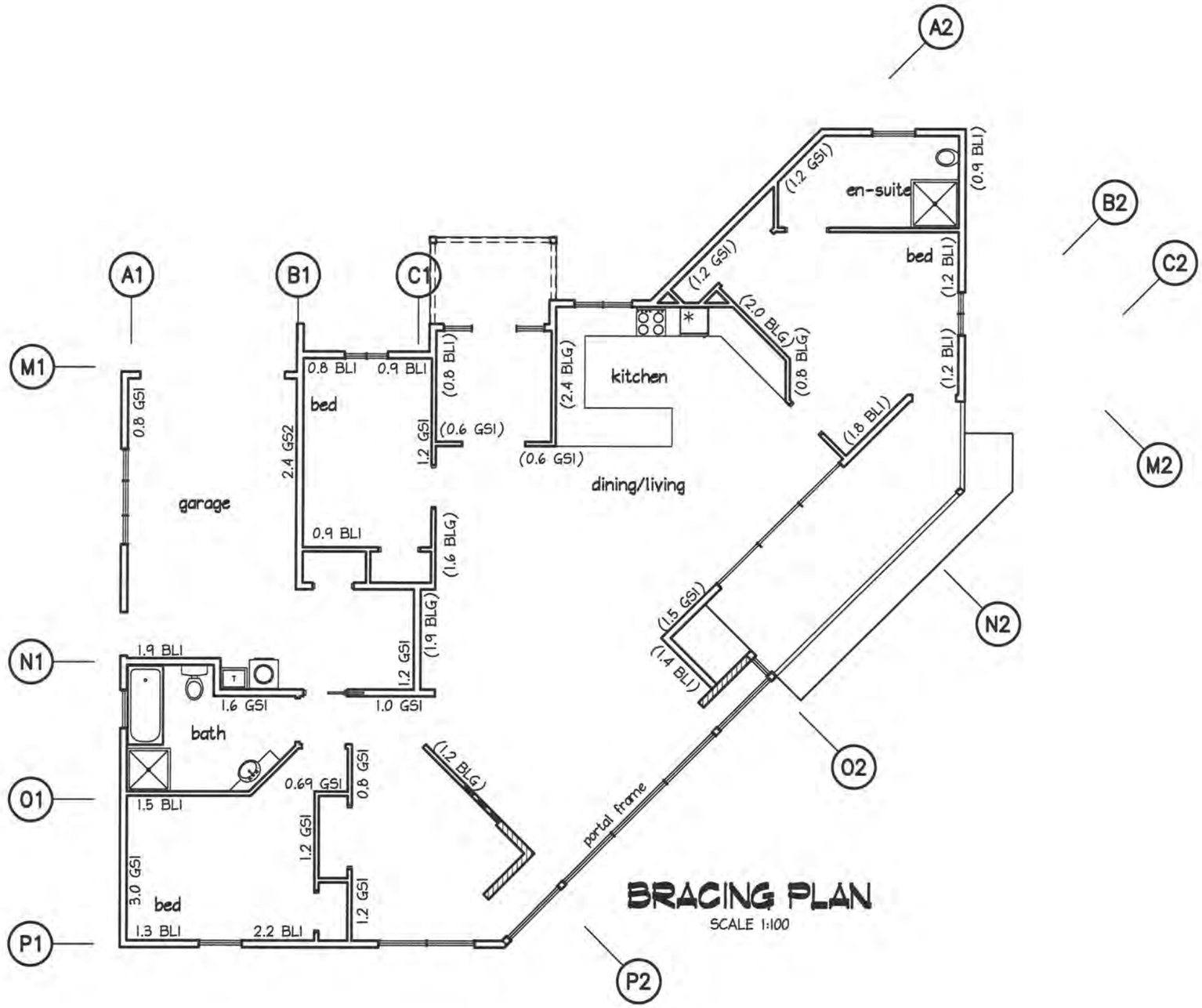

BRACING PLAN

SCALE 1:100

the contractor shall check and verify dimensions before construction

designscape
shark bait ltd
Civil, Structural and Building design
http://www.designscape.net.nz
email info@designscape.net.nz

Allan Pullenger AIPENZ CertETn
298 Rosetta Road
sunny Raumati

phone & fax 04 902 8528
Mob 027 442-0486

WARD HOUSE
35B KOTARE ST-WAIKANAE
PROPOSED DWELLING

scale	1:100
date	June 2011
drawn	Stuart Jackson
designed	Allan Pullenger

plan number
2690-01
Sheet 19 of 21

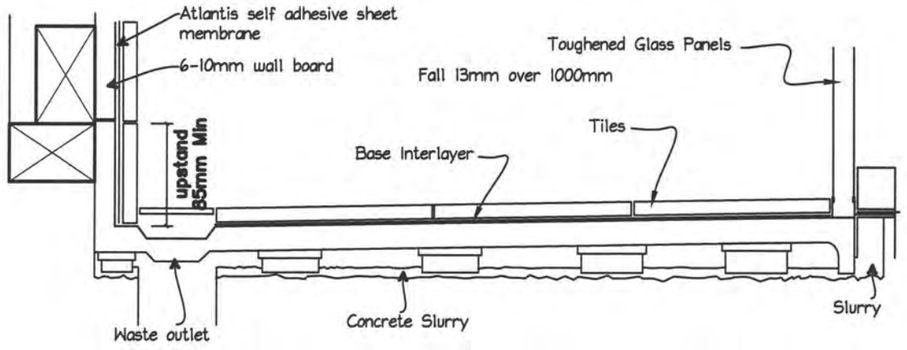

SET IN CONCRETE FLOOR
Scale 1:5

LINEA QUATTRO ONE PIECE WET AREA SHOWER BASE WITH INTEGRATED CHANNEL DRAIN FROM ATLANTIS.

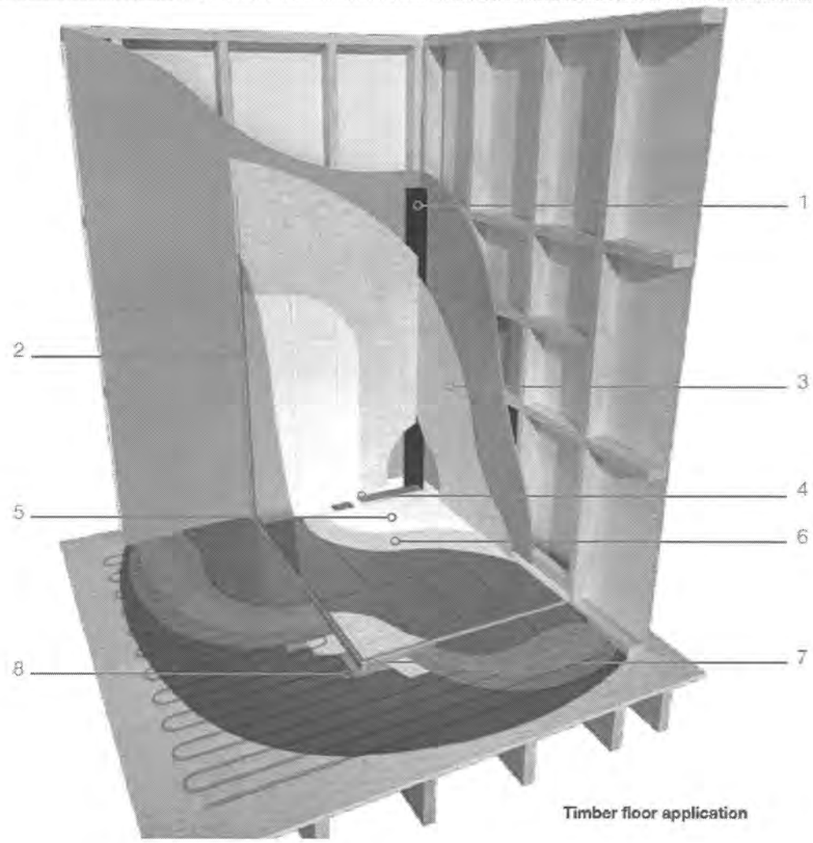

Timber floor application

LEAK-FREE SHOWERING, GUARANTEED.

1 Corner detail tape
2 Wall channel
3 Self-adhesive wall membrane
4 Channel drain and waste outlet
5 Shower base surface
6 Base interlayer (adhesion surface only)
7 Factory-fitted base channel
8 Base floor connector

BUILDING CODE COMPLIANT AND PERFORMANCE TESTED

The waterproofing membrane and connection to the Linea Quattro™ shower base have been BRANZ appraised and tested to meet the requirements of the NZ Building Code.

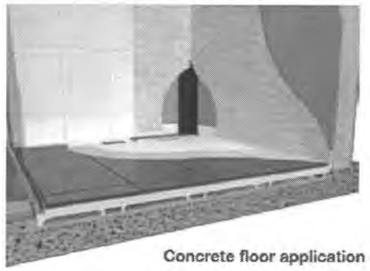

Concrete floor application

the contractor shall check and verify dimensions before construction

designscape
shark bait ltd
Civil, Structural and Building design
http://www.designscape.net.nz
email info@designscape.net.nz

Allan Pullenger AIPENZ CertETn
298 Rosetta Road
sunny Raumati

phone & fax 04 902 8528
Mob 027 442-0486

WARD HOUSE
35B KOTARE ST-WAIKANAE
PROPOSED DWELLING

scale	n.t.s.
date	June 2011
drawn	Stuart Jackson
designed	Allan Pullenger

plan number
2690-01
Sheet 20 of 21

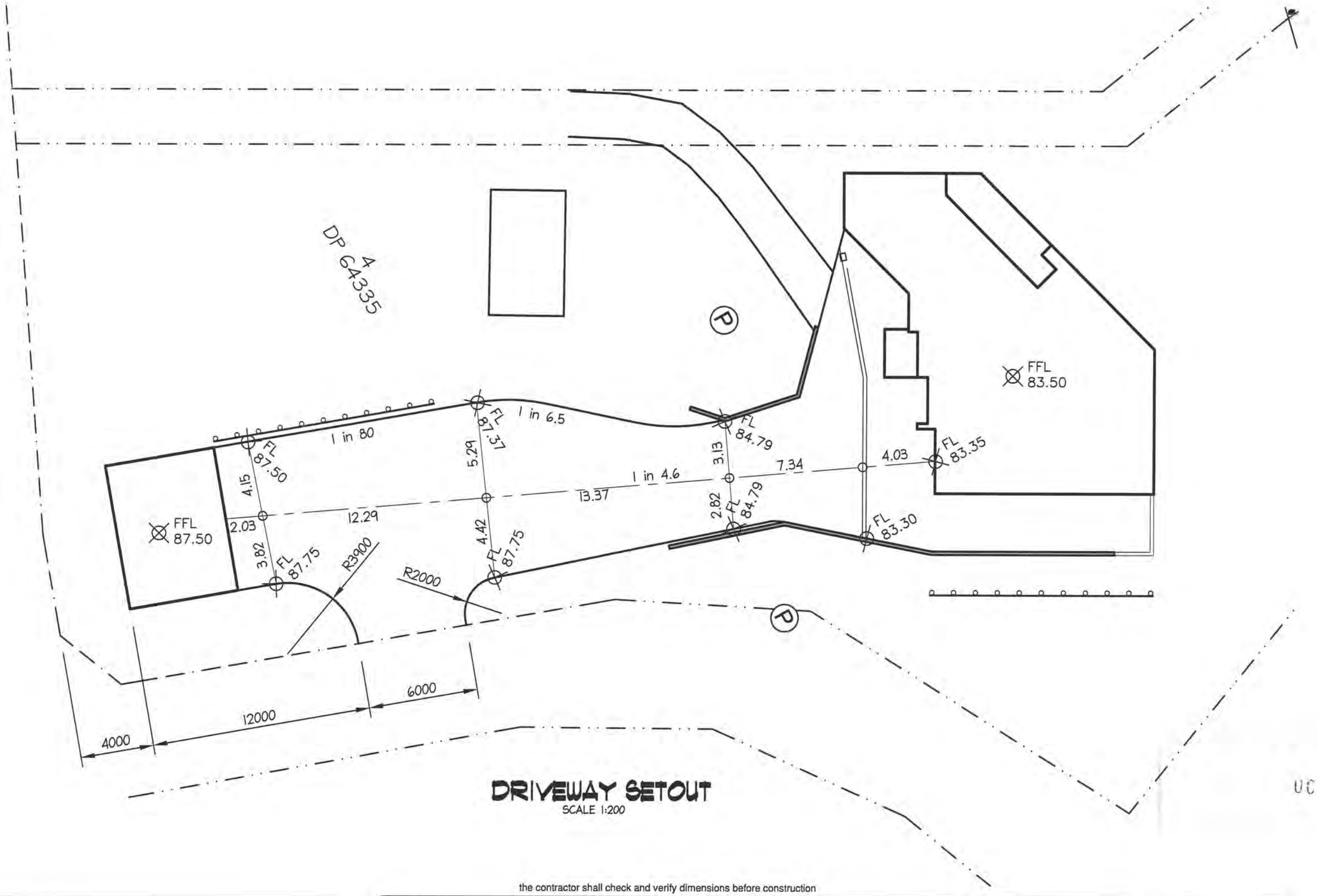

DRIVEWAY SETOUT

SCALE 1:200

the contractor shall check and verify dimensions before construction

designscape
shark bait ltd
Civil, Structural and Building design
http://www.designscape.net.nz
email info@designscape.net.nz

Allan Pullenger AIPENZ CertETn
298 Rosetta Road
sunny Raumati

phone & fax 04 902 8528
Mob 027 442-0486

WARD HOUSE
35B KOTARE ST-WAIKANAE
PROPOSED DWELLING

scale	1:200
date	June 2011
drawn	Stuart Jackson
designed	Allan Pullenger

plan number
2690-01
Sheet 21 of 21

TOTALSPAN®

GARAGES • SHEDS • CARPORTS

Engineered By:

F R Smith Consultant

consulting engineer, civil - structural

Producer Statement
Structural Details

CLIENT:

Tony Ward

Kotare Street
Waikanae
Kapiti

BUILDING:

Size & Stud Height: 5.914m long x 3.964m wide, with 2.700m stud height, Bay Size 3.000m
Awning(s): 1 x Awning 6.000m long x 4.000m wide
Wind Zone: HIGH (A6-A7)
Area: 47.443m²

Steel Framed Enclosed Buildings

NOTES

Copyright: These drawings must not be reproduced without express permission from Fred R. Smith Consultants and Versatile Buildings Limited

INDEX

Cover Page (this page)
Producer Statement: F.R. Smith Consultants - Design
Producer Statement: Versatile Buildings/BHP - Durability
Specifications - Building Components
Site Plan
Building Elevations
Foundation Details
Section - End Wall
Building Details
Roof Plans
Flashing Details
Bracing Reference
Awning
Awning Foundation

00031

I certify that buildings erected in accordance with these drawings will conform to the requirements of the New Zealand and Australian Building Codes.

F R Smith BE (civil) MIPENZ, MACENZ, MEIAust, no. 2410880, Cp.Eng. RPEQ (6225)

IPENZ ENGINEERS NEW ZEALAND | NEW ZEALAND INSTITUTE OF ARCHITECTS INCORPORATED | ACENZ

Building Code Clause(s) B1

PRODUCER STATEMENT – PS1 – DESIGN

(Guidance notes on the use of this form are printed on the reverse side)*

ISSUED BY: Frederick R Smith Consulting
(Design Firm)

TO: Tony Ward / Totalspan Buildings
(Owner/Developer)

TO BE SUPPLIED TO: KCDC
(Building Consent Authority)

IN RESPECT OF: Portal Building
(Description of Building Work)

AT: Kotare Street, Waikanae, Kapiti, , / High (A6-A7) - T.C.2 Rural
(Address)

..... **DP** ..... **SO** .....

We have been engaged by the owner/developer referred to above to provide structural design ..... services in respect of the requirements of
(Extent of Engagement)
Clause(s) B1 and B2 ..... of the Building Code for
(•) All or ( ) Part only (as specified in the attachment to this statement), of the proposed building work.

The design carried out by us has been prepared in accordance with:

☑ Compliance Documents issued by Department of Building & Housing B1/VM1, B1/VM4, AS/NZS 1170:2002 .....
(verification method / acceptable solution)
NZS 3101, AS/NZS 4600 ..... or

☐ Alternative solution as per the attached schedule .....

The proposed building work covered by this producer statement is described on the drawings titled Portal Building ..... and numbered 1-14 ;

together with the specification, and other documents set out in the schedule attached to this statement.

On behalf of the Design Firm, and subject to:

(i) Site verification of the following design assumptions Soil bearing strength to be not less than 75 kPa (Ultimate capacity of 225 kPa to NZS 3604:1999)

(ii) All proprietary products meeting their performance specification requirements;

I believe on reasonable grounds the building, if constructed in accordance with the drawings, specifications, and other documents provided or listed in the attached schedule, will comply with the relevant provisions of the Building Code.

I, Frederick R Smith ..... am: ☑ CPEng 34469 ..... #
(Name of Design Professional)
☐ Reg Arch ..... #

I am a Member of : ☑ IPENZ ☐ NZIA and hold the following qualifications: BE (Civil) .....

The Design Firm issuing this statement holds a current policy of Professional Indemnity Insurance no less than $200,000*.
The Design Firm is a member of ACENZ (•) **YES** ( ) **NO**

SIGNED BY Frederick Roland Smith ..... ON BEHALF OF Frederick Smith Consulting Engineers .....
(Design Firm)

Date 24-06-2010 ..... *(signature)* .....

Note: This statement shall only be relied upon by the Building Consent Authority named above. Liability under this statement accrues to the Design Firm only. The total maximum amount of damages payable arising from this statement and all other statements provided to the Building Consent Authority in relation to this building work, whether in contract, tort or otherwise (including negligence), is limited to the sum of $200,000.*

This form is to accompany **Form 2 of the Building (Forms) Regulations 2004** for the application of a Building Consent.

THIS FORM AND ITS CONDITIONS ARE COPYRIGHT TO ACENZ, IPENZ AND NZIA

MANUFACTURERS STATEMENT - DURABILTY

Cladding

To satisfy the requirements of Clause B2:"Durability" of the NZBC and to ensure the cladding material meets a **15-year durability** life the following provisions must apply:

Cladding Range of Product and Use

- Coating Type: Zinc/Aluminium & Painted (Coloured Steel).
- Steel thickness range: 0.35mm - 0.55mm BMT
- Steel grade range: G300 - G550
- Application: Standard Totalspan Roof and Wall Cladding
- Profile: Totalspan 7 Rib, Totalspan 6 Rib

Requirements, Limitations and Exclusions

- Fixing and installation of the cladding must be done exactly in accordance with Totalspan Buildings instructions and specifications.
- Normal and regular maintenance must be carried out on the exterior surface of the cladding and the following guide must be followed to ensure the durability requirements are met.

Regular Maintenance

- **Normal Maintenance to be completed in accordance with Durability - Acceptable Solution B2/AS 2.1.3**
- **Corrosion Zones 1, 2, 3, 4. (*Reference NZS 3604:1999 Corrosion Zone Figure 4.1)**
  Rain-washing only required on ***exposed*** *(open to airborne salts and rain wetting)* material. ***Sheltered*** *(open to airborne salts, but not rain washed)* or protected areas such as under spouting, top-cladding sheets and tops of doors require washing every 3 months.
- **Sea Spray Zones (Within 500m from the sea or 100m from sheltered harbours or inlets – *Reference NZS 3604:1999 4.2.3) and areas of Geothermal Activity (*Reference NZS 3604:1999 4.2.4).**
  Rain-washing only required on ***exposed*** *(open to airborne salts and rain wetting)* areas. ***Sheltered*** *(open to airborne salts, but not rain washed)* and protected areas such as under spouting, top cladding and tops of doors require washing down every month and whenever corrosive salts are present.

Extended Maintenance, Painting or Repainting

- **Extended Durability**
  Once the metallic coating or the paint system has weathered away, signs of red rust for bare material or signs of the metallic coating for painted material, painting of the entire surface is required to extend the life of the cladding product. Paint manufacturers recommendations are to be followed for surface preparation and paint type to be used.
- **Evident Corrosion**
  Areas that show signs of white or red rust/corrosion (typically in unwashed areas) require cleaning back with a stiff brush and cleaner to remove all dust, surface contaminants and corrosion products and present a sound substrate for painting. Priming of the surface and application of two coats of paint as per the Paint Manufacturer's recommendations is then required.
  Particular attention needs to be paid to laps (side, end, flashing etc) where earlier corrosion may start due to moisture and dirt entrapment.
  If evident corrosion is not treated quickly rapid deterioration of the sheet may occur which could result in perforation. At this stage replacement of the affected sheet is the best option.

Steel Framing

To satisfy the requirements of Clause B2:"Durability" of the NZBC and to ensure the structural framing material meets a 50-year durability life the following provisions must apply:

Steel Framing Range of Product and Use

- Coating Type: Galvanised
- Steel thickness range: 0.75mm – 2.4mm BMT
- Steel grade range: G450 – G550
- Application: Standard Totalspan Purlins, Girts, Portal Frames, Door Jambs, Wall Uprights, Bridging
- Profile: C Sections – 80x40, 150x64, 220x64, 250x85
  Z Sections – 100x53, 150x65
  Tophat Sections – 100x163, 120x170, 150x183

Regular Maintenance

- **Normal Maintenance to be completed in accordance with Durability - Acceptable Solution B2/AS 2.1.3**
- **Corrosion Zones 1, 2, 3, 4. (*Reference NZS 3604:1999 Corrosion Zone Figure 4.1)**
  Rain-washing only required on ***exposed*** *(open to airborne salts and rain wetting)* material. ***Sheltered*** *(open to airborne salts, but not rain washed)* or protected areas such as under spouting, top-cladding sheets and tops of doors require washing every 3 months.
- **Sea Spray Zones (Within 500m from the sea or 100m from sheltered harbours or inlets – *Reference**
- **NZS 3604:1999 4.2.3) and areas of Geothermal Activity (*Reference NZS 3604:1999 4.2.4).**
  Rain-washing only required on ***exposed*** *(open to airborne salts and rain wetting)* areas. ***Sheltered*** *(open to airborne salts, but not rain washed)* and protected areas such as under spouting, top cladding and tops of doors require washing down every month and whenever corrosive salts are present.

References

1. NZBC – Compliance Document – Clause B2 - Durability
2. NZS 3604, Clause 4, Durability*

* - Totalspan Buildings acknowledges and understands that NZS 3604 is a Timber Framed Building standard. Totalspan Buildings has used NZS 3604 as a reference only to identify Corrosion Zones, Sea Spray Zones and areas of Geothermal activity.

Building Tables

Zoned:	T.C.2 Rural		
Wind Zone:	High (A6-A7)	**Wind Region:**	Region A6-A7 (High)
Bay Size:	3.0m		
Live Roof Load:	0.25 kpa		
Roof Snow Load:	0.86kpa		
Inner Purlins:	C80x40(2)	**Row Numbers:**	6
Ridge & Gutter Purlins:	C80x40		
Girts:	B80x40	**End Wall:**	3
End Wall Post - On Edge:	B80x40		
Roof Frames - Portals:	C15010		

GENERAL

1 - All work shall conform to the New Zealand Building Code.
2 - Check diagonals to ensure building is square.

LOADINGS

1 - Buildings are designed to AS/NZS 1170 for NZS 3604 HIGH and VERY HIGH. Design Wind Speeds to limit state levels of 45 and 50m/s, T.C.2 roof live load of 0.25kPa, and basic Roof Snow loads of 0.86kPa. Heavier snow loads will be a specific design as will buildings used for habitable purposes.
2 - The roofing is not designed for point loads of 1 Kn.

FOUNDATIONS

1 - Support ground to have a safe bearing capacity of at least 75 kPa. In weaker ground building loads to be taken to subsoil which has a bearing capacity of at least 75 kPa.

CONCRETE

1 - Remove vegetation, 60mm of top soil and loose material from the site of the building, backfill with compacted hardfill, if required, and lay a blinding of sand to the underside of the concrete slab. Ensure the surface of the slab will be at least 100mm above the highest level of cleared ground around the slab.
2 - Concrete shall have a maximum aggregate size of 20mm, slump of 80mm maximum and a 20 MPa compression strength at 28 days.
3 - The concrete floor slab shall be 100mm thick with a 200 x 200 mm edge thickening and a D16 rod continuous around the perimeter of the slab with 600 laps and 75 bottom cover.
4 - Concrete slab to be reinforced with 668 mesh placed 30mm maximum below the slab surface with 225mm laps.
5 - Provide a 0.25mm black polythene dampproof and slip layer under the slab taped with 100mm laps (optional but recommended).
6 - Fix roof frames to concrete with M10 zinc screwbolts screwed into holes drilled in the slab.

STEELWORK

1 - All structural framing members shall be G550-1.0mm BMT, G500-1.2mm BMT, G450-1.5mm, 1.9mm BMT grade steel galvanised to Z200 (G550 for 80 x 40 boxed and single channels). Cleats to be G450, Z200.
2 - Purlins and girts shall be 80 x 40 x 0.75 B.M.T. lipped, crimped channel located at centres shown on the drawings.
3 - Boxed members to be flange fixed with #10 Tek screws at 600 centres.
4 - Screws to be #10 x 16mm long Tek screws Class 3 zinc plated, fixed at a minimum edge distance of 6mm and to a12mm minimum pitch.
5 - Girts to be connected with 2 #10 Tek screws each side of girt.
6 - Steelwork shall conform to:
NZ/AS 4600 Cold Formed Steel Structures Code
NZ/AS 1397:1993
AS 1562:1962 Design and Installation of Metal Roofing
AS 1111/1112 Hex Commercial Bolts and Screws
AS 3566 Self Drilling Screws for Building

CLADDING

1 - Roof and wall sheeting shall be 0.35 B.M.T., G550 grade steel zincalumed to AZ150 and rolled to profile as detailed.
2 - Roof sheets shall be fixed to ridge and eaves purlins with a Tek screw at every rib, as shown, tekscrew to alternative ribs at intermediate fixings, all complete with neoprene washers tigtened firmly but not to form depressions in the roof cladding. Ensure all roof fixings are waterproof.
3 - Wall sheeting shall be fixed to the eave purlins and to the rafters of the end wall frames with a Tek screw at third points of each pan and to third points of alternate pans at other girts and fixings.
4 - Ridges, gables and all penetrations to be flashed with similar sheet steel.
5 - Guttering to be fixed with Tek screws and joint sealed with silicone. Fit downpipes to guttering to discharge to an approved stormwater drainage system, provided by the Owner.
6 - Frame for personnel door and windows with 80 x 40 x 0.75 unlipped channels. Flange connect members with 2 screws to each flange Fix jambs to floor with 40x40x1.2 angle cleat having 1/M10 screwbolt to concrete and 2 Tek screws to jamb.

FREDERICK R SMITH
chartered consulting engineer
363 Wairakei Rd, Burnside
Christchurch 8053
Phone 03 348 1521

I certify that buildings erected in accordance with these drawings will comply with the New Zealand Building Code.

F R Smith
BE (civil) MIPENZ MACENZ MIEAust
CPEng RPEQ (6225)

TOTALSPAN
A Division of VERSATILE BUILDINGS LTD
112 WATERLOO ROAD, HORNBY
P.O. BOX 11-013, CHRISTCHURCH
PH: (09) 261 2306 FAX: (09) 262 1535

Drawing Title:
PORTAL BUILDING SPECIFICATIONS

For: Tony Ward
Kotare Street
Waikanae
Kapiti

SCREWBOLT NOTE

1 EMBEDMENT DEPTH OF SCREW BOLTS= 70mm
2 SCREWBOLTS SHALL BE M10/75 ZINC PLATED IN 10DIA. HOLES 80 DEEP.

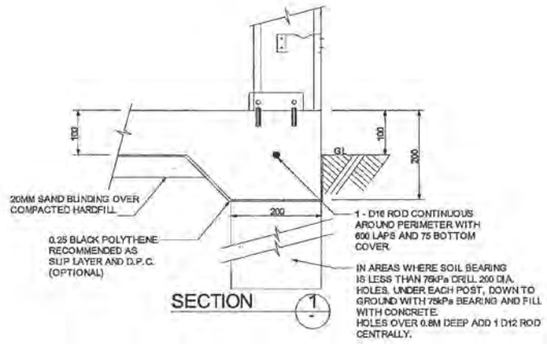

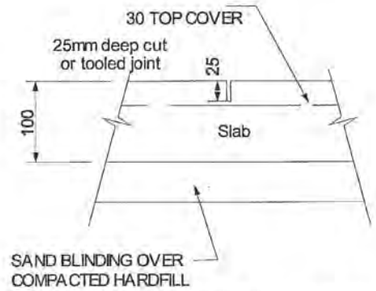

CONTROL JOINT DETAIL (TYP.)

CONCRETE SLAB NOTE:

Concrete slabs to have construction joints keyed during placing or cut in panels not exceeding the following dimensions:

Unreinforced	3m x 3.9m
Fibre reinforced	4m x 6m (Fibre dosage 0.7kg/cu.m)
Mesh reinforcement	6m x 12m (668 mesh, 225 laps, 30mm top cover)

For slabs 15m to 30m long, form keyed joints at mid length of floors. For slabs over 30m long keyed joints to be at a maximum of 15m centres.

BOXED C80x40 END WALL UPRIGHT

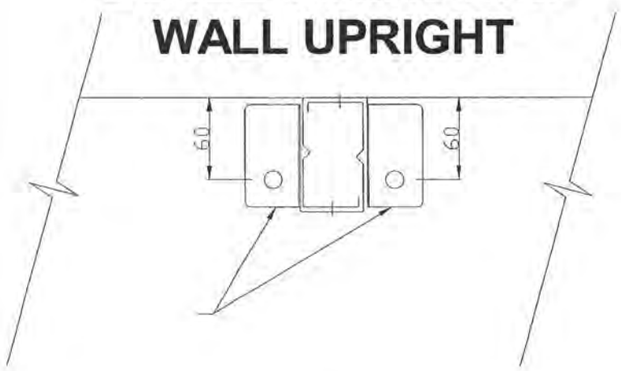

40X40X1 ANGLE 75 LONG WITH
4#10 TEKS OR 2/M10 BOLTS TO POST
& 1/M10 SCREWBOLTS TO CONCRETE.

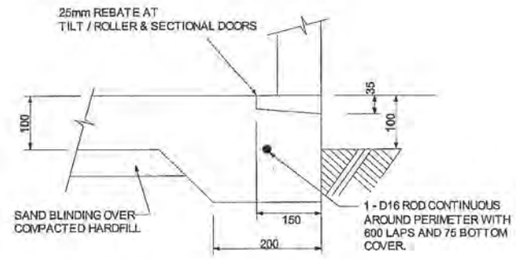

P.A. DOOR & GARAGE ENTRY
SLAB EDGE DETAIL (TYP.)

FREDERICK R SMITH
chartered consulting engineer
363 Wairakei Rd, Burnside
Christchurch 8053
Phone 03 348 1521

I certify that buildings erected in accordance with these drawings will comply with the New Zealand Building Code.

F R Smith
BE (civil) MIPENZ MACENZ MIEAust
CPEng RPEQ (6225)

TOTALSPAN
A Division of VERSATILE BUILDINGS LTD
112 WATERLOO ROAD, HORNBY
P.O. BOX 11-013, CHRISTCHURCH
PH: (09) 261 2306 FAX: (09) 262 1535

Drawing Title:
PORTAL BUILDING
FOUNDATION DETAILS

For: Tony Ward
Kotare Street
Waikanae
Kapiti

C150
END WALL FRAME

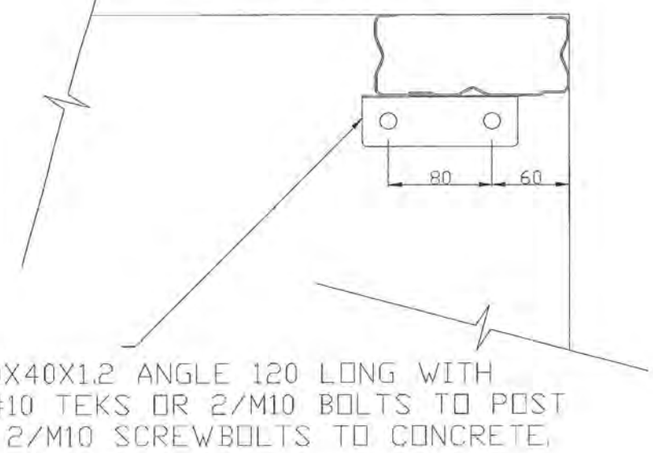

SINGLE C150
INTERIOR FRAME

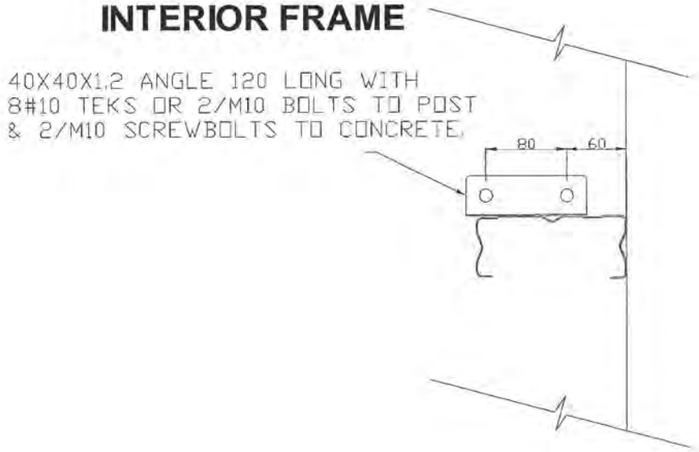

FREDERICK R SMITH **chartered consulting engineer** 363 Wairakei Rd, Burnside Christchurch 8053 Phone 03 348 1521	I certify that buildings erected in accordance with these drawings will comply with the New Zealand Building Code. F R Smith BE (civil) MIPENZ MACENZ MIEAust CPEng RPEQ (6225)	TOTALSPAN **A Division of VERSATILE BUILDINGS LTD** 112 WATERLOO ROAD, HORNBY P.O. BOX 11-013, CHRISTCHURCH PH: (09) 261 2306 FAX: (09) 262 1535	Drawing Title: **PORTAL BUILDING** **FOUNDATION DETAILS**	For: Tony Ward Kotare Street Waikanae Kapiti

Apex Height (mm): 3232
Wall Height (mm): 2700

Girts Centre Lines mm (above floor level):					
Girts Rows:	**1**	**2**	**3**	**4**	**5**
	95	1200	2500	-	-

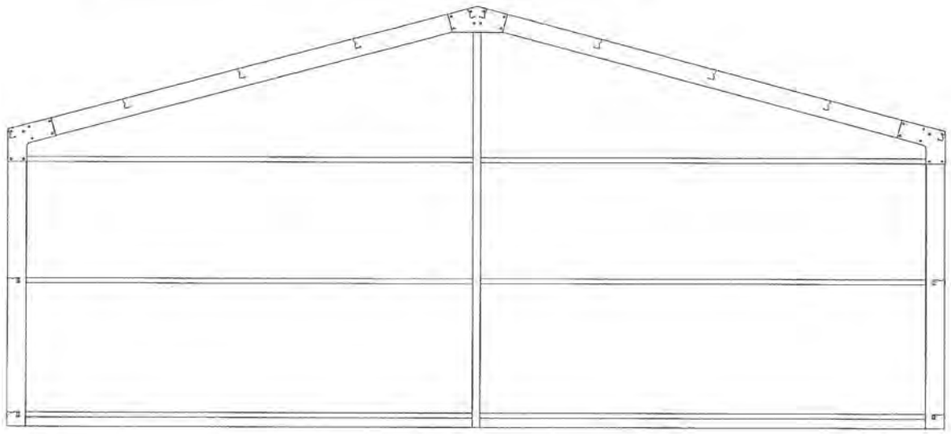

END WALL FRAME

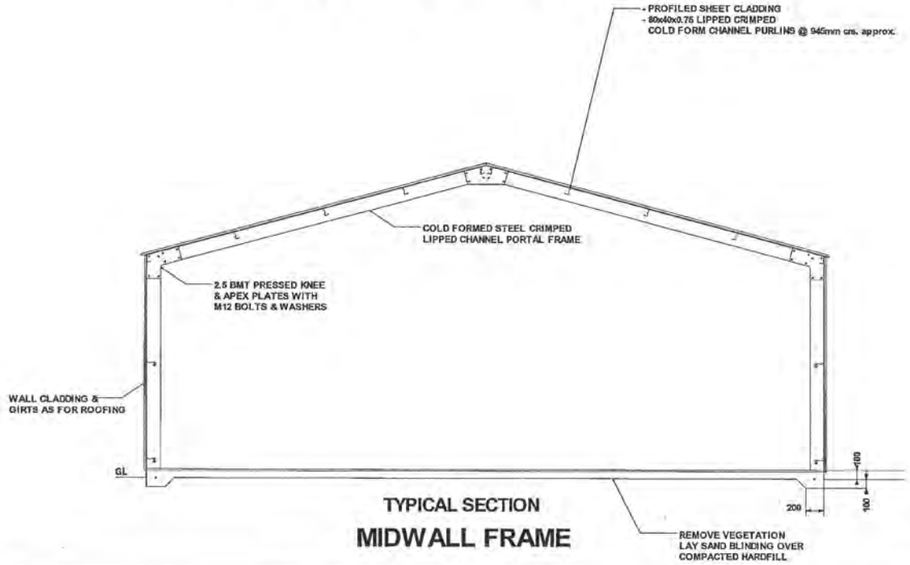

TYPICAL SECTION

MIDWALL FRAME

FREDERICK R SMITH **chartered consulting engineer** 363 Wairakei Rd, Burnside Christchurch 8053 Phone 03 348 1521	I certify that buildings erected in accordance with these drawings will comply with the New Zealand Building Code. F R Smith BE (civil) MIPENZ MACENZ MIEAust CPEng RPEQ (6225)	TOTALSPAN **A Division of VERSATILE BUILDINGS LTD** 112 WATERLOO ROAD, HORNBY P.O. BOX 11-013, CHRISTCHURCH PH: (09) 261 2306 FAX: (09) 262 1535	Drawing Title: **PORTAL BUILDING** **SECTION - END WALL**	For: Tony Ward Kotare Street Waikanae Kapiti

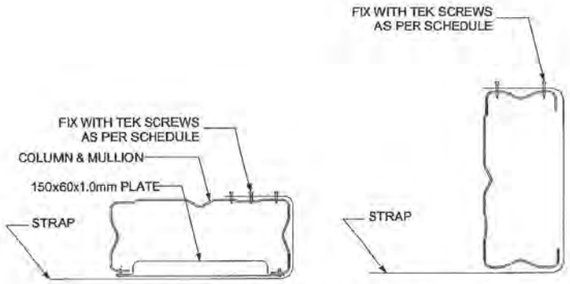

BRACING STRAP FIXING DETAIL
(FOR ALL CASES PER STRAP)

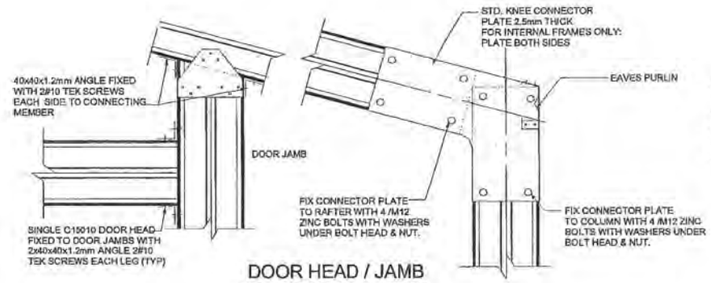

DOOR HEAD / JAMB
CONNECTION DETAIL
TYP. DETAIL B

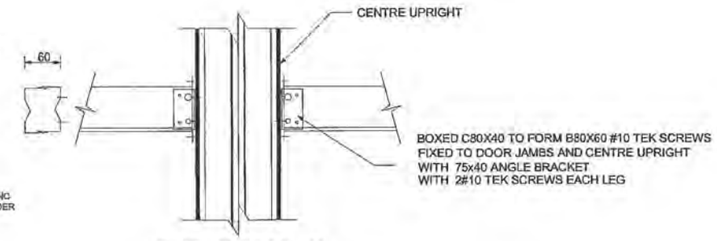

TYP. DETAIL C

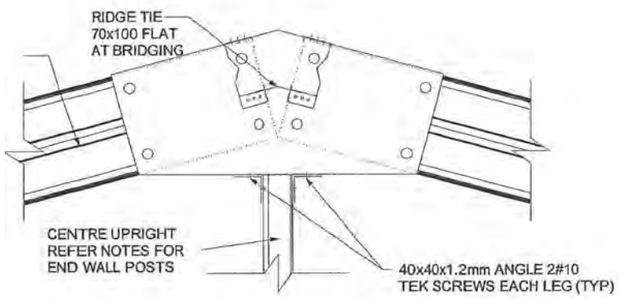

TYP. DETAIL A

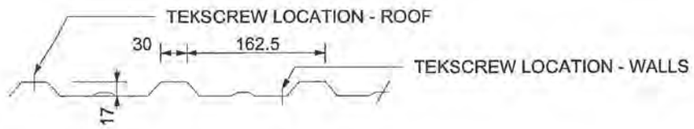

SHEETING PROFILE 0.35 T.C.T.

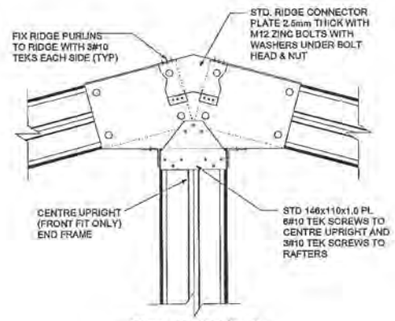

TYP. DETAIL D

FREDERICK R SMITH **chartered consulting engineer** 363 Wairakei Rd, Burnside Christchurch, 8053 Phone 03 348 1521	I certify that buildings erected in accordance with these drawings will comply with the New Zealand Building Code. F R Smith BE (civil) MIPENZ MACENZ MIEAust CPEng RPEQ (6225)	TOTALSPAN **A Division of VERSATILE BUILDINGS LTD** 112 WATERLOO ROAD, HORNBY P.O. BOX 11-013, CHRISTCHURCH PH: (09) 261 2306 FAX: (09) 262 1535	Drawing Title: **PORTAL BUILDING** **BUILDING DETAILS**	For: Tony Ward Kotare Street Waikanae Kapiti Page 8 of 14

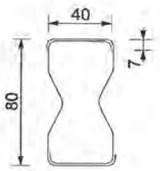

TYPICAL BOXED CRIMPED LIPPED CHANNEL SECTION (EX 0.75 BMT)

ALL PURLINS AND GIRTS SINGLE UNLESS NOTED TO BE BOXED.

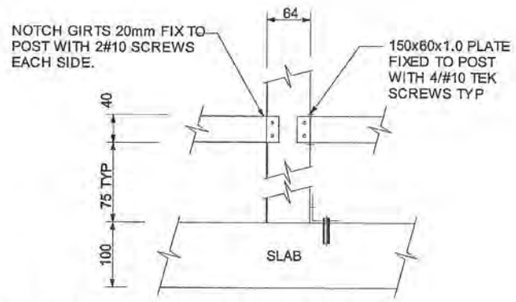

TYP. GIRT TO POST DETAIL

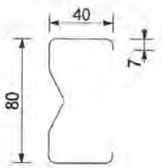

TYPICAL CRIMPED LIPPED CHANNEL SECTION (EX 0.75 BMT)

ALL PURLINS AND GIRTS SINGLE UNLESS NOTED TO BE BOXED.

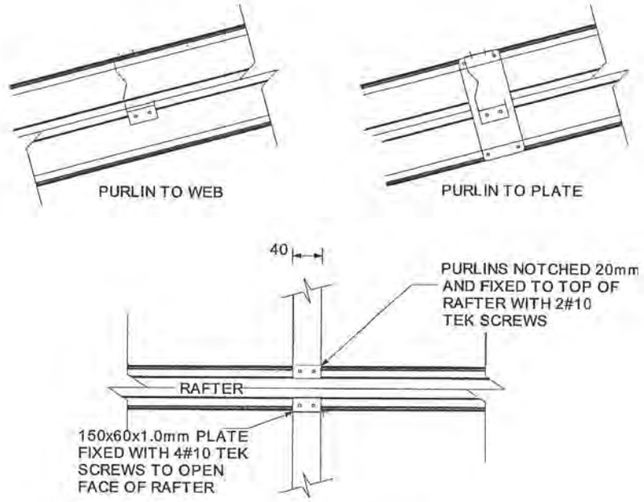

TYPICAL PURLIN TO RAFTER DETAILS

FREDERICK R SMITH
chartered consulting engineer
363 Wairakei Rd, Burnside
Christchurch, 8053
Phone 03 348 1521

I certify that buildings erected in accordance with these drawings will comply with the New Zealand Building Code.

F R Smith
BE (civil) MIPENZ MACENZ MIEAust
CPEng RPEQ (6225)

TOTALSPAN
A Division of VERSATILE BUILDINGS LTD
112 WATERLOO ROAD, HORNBY
P.O. BOX 11-013, CHRISTCHURCH
PH: (09) 261 2306 FAX: (09) 262 1535

Drawing Title:

PORTAL BUILDING

BUILDING DETAILS

For: Tony Ward
Kotare Street
Waikanae
Kapiti

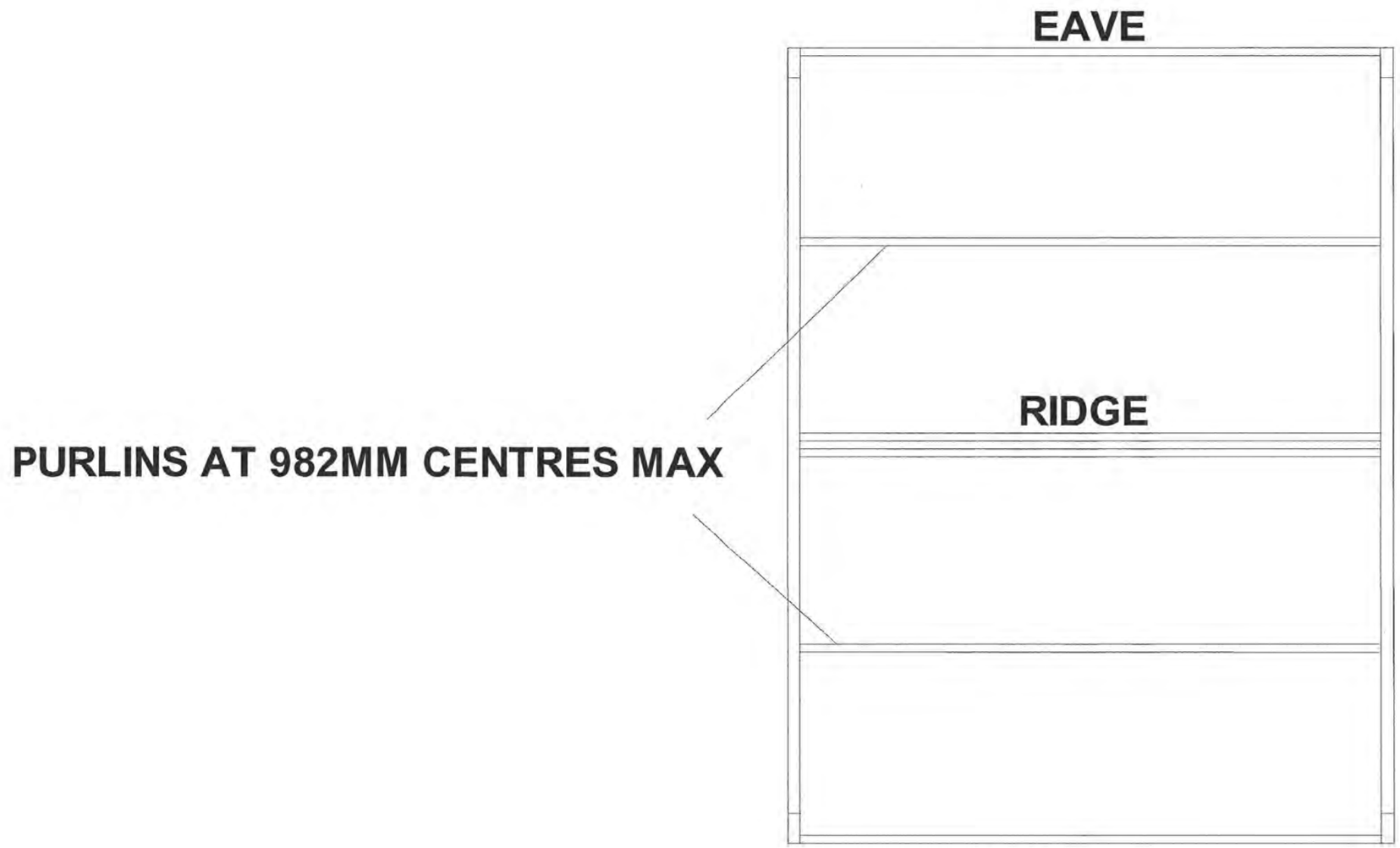

FREDERICK R SMITH **chartered consulting engineer** 363 Wairakei Rd, Burnside Christchurch 8053 Phone 03 348 1521	I certify that buildings erected in accordance with these drawings will comply with the New Zealand Building Code. F R Smith BE (civil) MIPENZ MACENZ MIEAust CPEng RPEQ (6225)	**TOTALSPAN** **A Division of VERSATILE BUILDINGS LTD** 112 WATERLOO ROAD, HORNBY P.O. BOX 11-013, CHRISTCHURCH PH: (09) 261 2306 FAX: (09) 262 1535	Drawing Title: **PORTAL FRAME** **ROOF PLANS**	For: Tony Ward Kotare Street Waikanae Kapiti

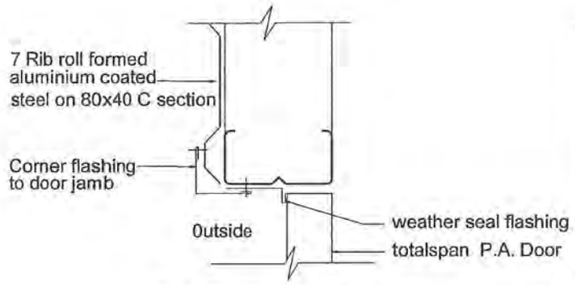

P.A. Door Jamb Detail

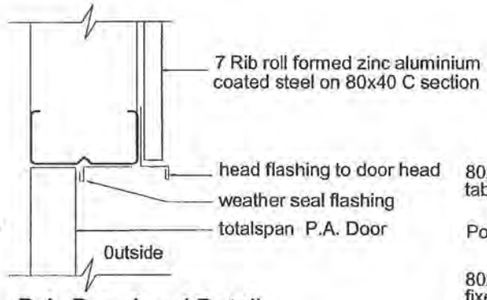

P.A. Door head Detail

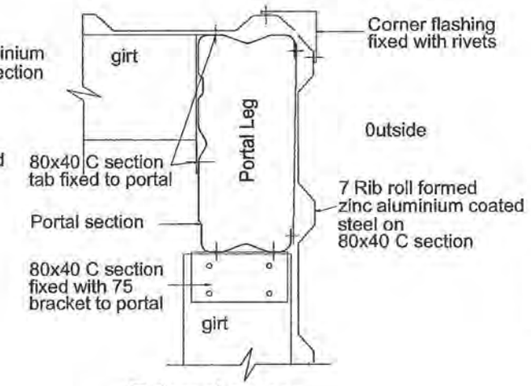

External corner

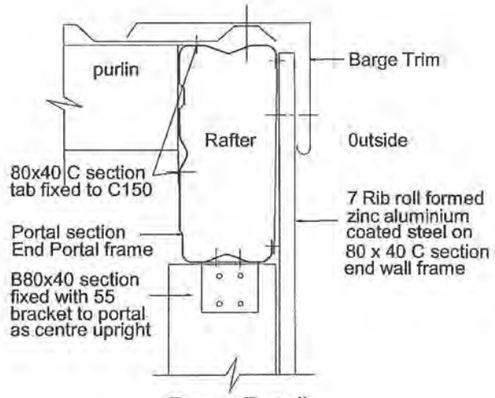

Barge Detail

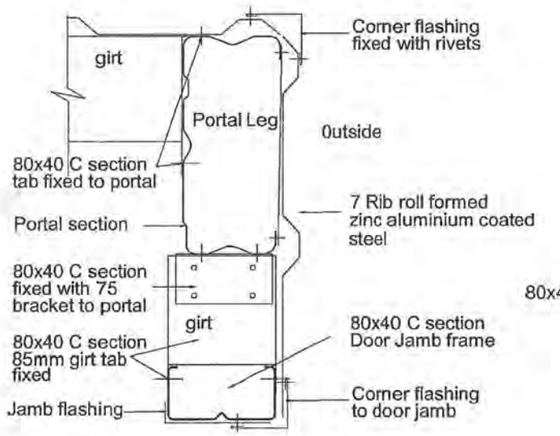

Roller Door Jamb Detail

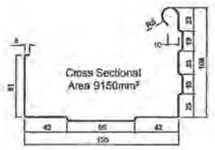

Gutter Profile

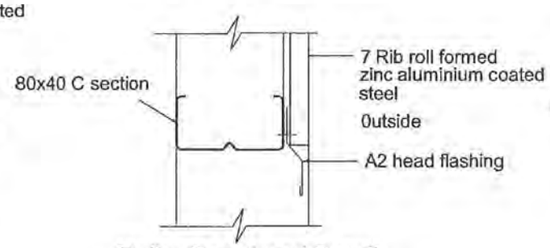

Roller Door head Detail

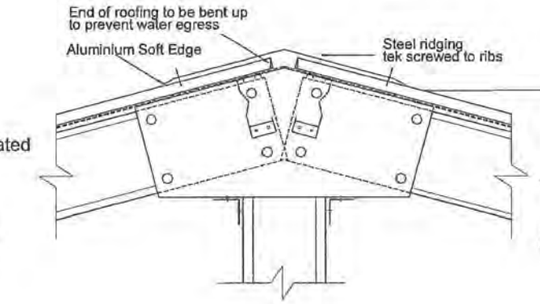

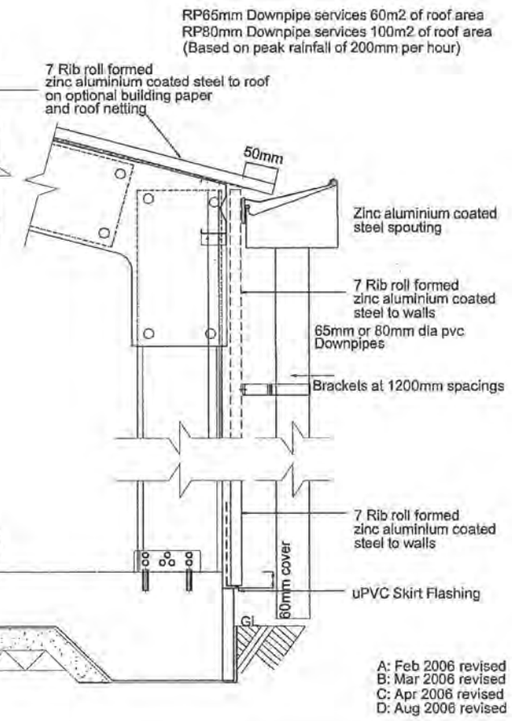

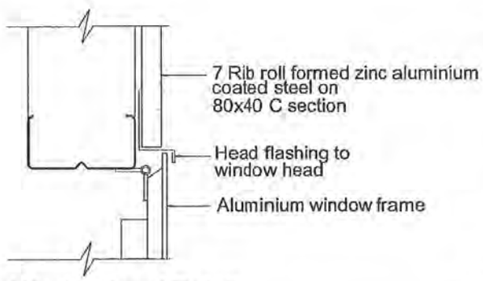

Window head Detail

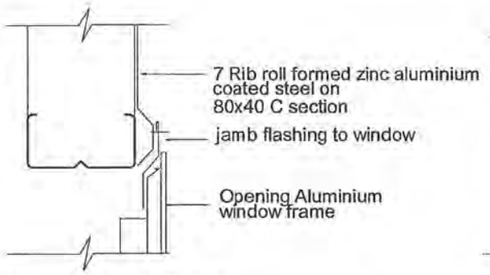

Window Jamb Detail

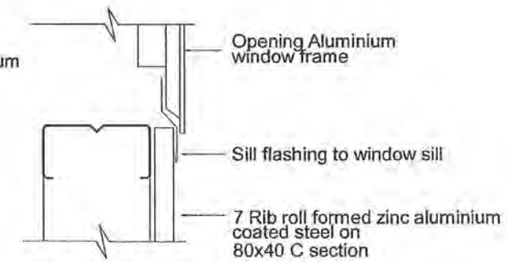

Window Sill Detail

A: Feb 2006 revised
B: Mar 2006 revised
C: Apr 2006 revised
D: Aug 2006 revised

FREDERICK R SMITH
chartered consulting engineer
363 Wairakei Rd, Burnside
Christchurch 8053
Phone 03 348 1521

I certify that buildings erected in accordance with these drawings will comply with the New Zealand Building Code.

F R Smith
BE (civil) MIPENZ MACENZ MIEAust
CPEng RPEQ (6225)

TOTALSPAN
A Division of VERSATILE BUILDINGS LTD
112 WATERLOO ROAD, HORNBY
P.O. BOX 11-013, CHRISTCHURCH
PH: (09) 261 2306 FAX: (09) 262 1535

Drawing Title:

PORTAL BUILDING

FLASHING DETAILS

NOTE;
1. Bracing shall be 27X0.6mm G550 steel strap fixed with 4 #10 tek screws each end.

2. BRACING LOCATION GABLE WALLS:
Building 2 to 4 Bays long, excluding garaport bays shall have 1 braced panel in either gable wall.
Building 5 bays and longer, excluding garaport bays shall have 1 braced panel in each of the gable walls.
When building is gable entry, bracing can be relocated to the opposite gable wall.

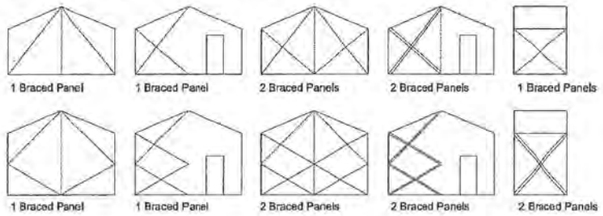

3. BRACING LOCATION SIDE WALLS
Buildings 2 to 4 bays long shall have 1 braced panel located as close as possible to the gable end wall on each side wall of the building.
Buildings 5 bays and longer excluding garaport bays shall have at least 2 braced panels in each side wall.
There must be 1 braced panel in the first four bays and 1 braced panel in the last four bays, both located as close as possible to the gable end walls and there must be no more than 5 bays between each braced panel.

4. BRACING RELOCATION SIDE WALLS:
If a braced panel can not be acheived with the above rules, then the conflicting braced panel shall be relocated in the opposite wall side and as close as possible directly opposite the original location.

If 1 or more braced panels are relocated from one side wall to the other, then add 1 braced panel to a gable wall that is closest to the original position of the relocated braced panel.

5. ROOF BRACING LOCATION
Buildings, 2 to 4 bays excluding garaport bays shall have 1 braced panel located in one of the end bays
Buildings, 5 bays and longer excluding Garaport bays, shall have at least 3 braced panels, 2 located in each end bay and there must be no more than five bays between each braced panel.

Other configurations of openings shall be specific design.

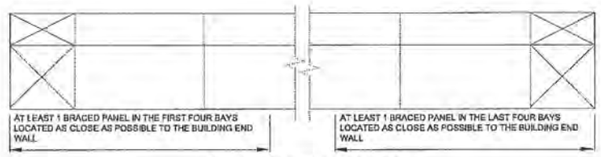

SIDE WALL ELEVATION

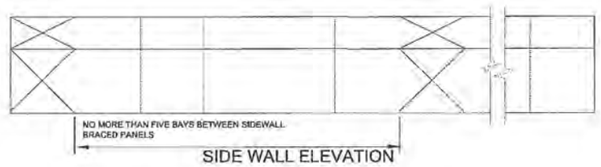

SIDE WALL ELEVATION

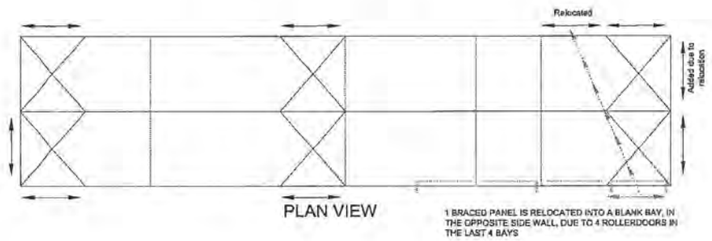

PLAN VIEW

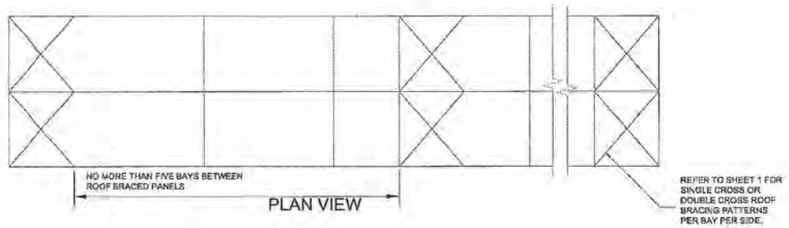

PLAN VIEW

FREDERICK R SMITH
chartered consulting engineer
363 Wairakei Rd, Burnside
Christchurch 8053
Phone 03 348 1521

I certify that buildings erected in accordance with these drawings will comply with the New Zealand Building Code.

F R Smith
BE (civil) MIPENZ MACENZ MIEAust
CPEng RPEQ (6225)

TOTALSPAN
A Division of VERSATILE BUILDINGS LTD
112 WATERLOO ROAD, HORNBY
P.O. BOX 11-013, CHRISTCHURCH
PH: (09) 261 2306 FAX: (09) 262 1535

Drawing Title:
PORTAL BUILDING
BRACING - WALLS AND ROOF

For: Tony Ward
Kotare Street
Waikanae
Kapiti

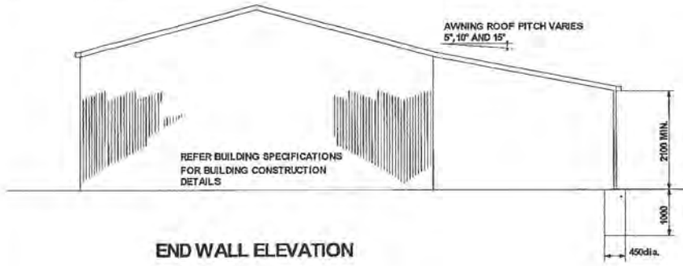

END WALL ELEVATION

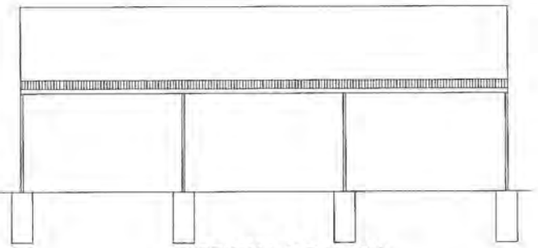

SIDE WALL ELEVATION
(NOT TO SCALE)
3M BAY SPACING

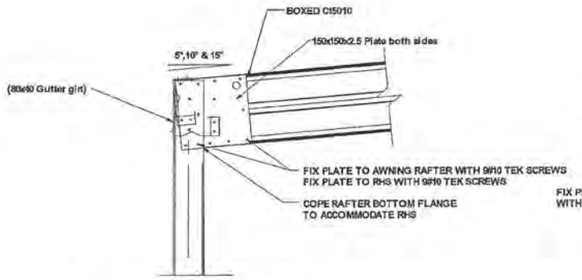

POST CONNECTION

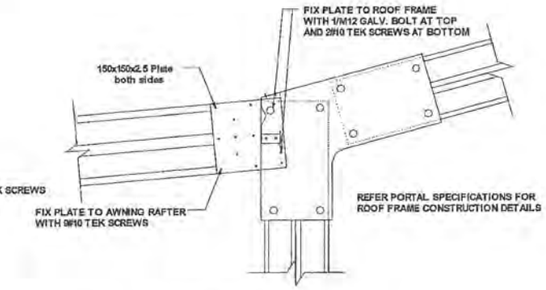

ROOF FRAME CONNECTION

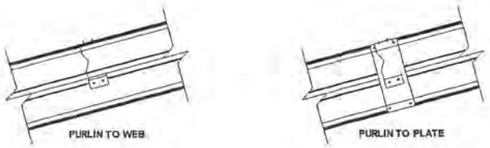

TYPICAL PURLIN TO
RAFTER DETAILS

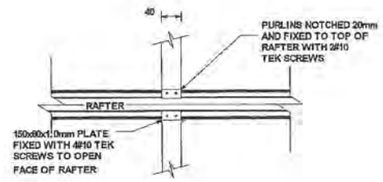

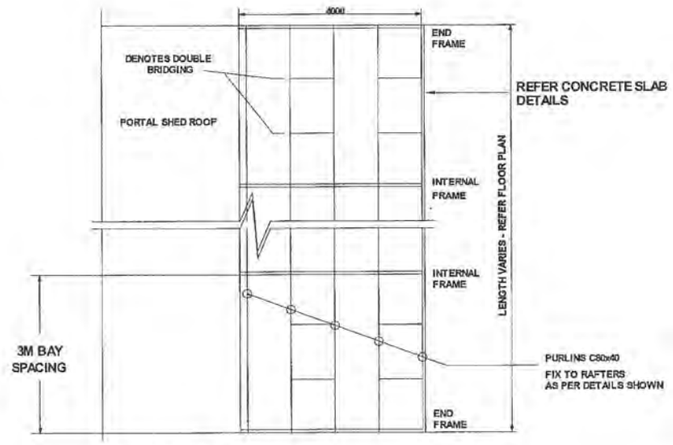

AWNING ROOF LAYOUT
(NOT TO SCALE)

Awning Rafters: B15010
Awning Purlins (Rows:5): C80x40(2)

FREDERICK R SMITH **chartered consulting engineer** 363 Wairakei Rd, Burnside Christchurch 8053 Phone 03 348 1521	I certify that buildings erected in accordance with these drawings will comply with the New Zealand Building Code. F R Smith BE (civil) MIPENZ MACENZ MIEAust CPEng RPEQ (6225)	TOTALSPAN **A Division of VERSATILE BUILDINGS LTD** 112 WATERLOO ROAD, HORNBY P.O. BOX 11-013, CHRISTCHURCH PH: (09) 261 2306 FAX: (09) 262 1535	Drawing Title: **AWNING 4M** **AWNING**	For: Tony Ward Kotare Street Waikanae Kapiti

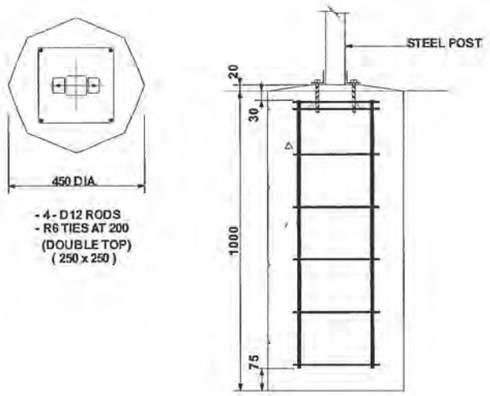

CONCRETE FOOTINGS

(FOR AWNINGS AND WHERE CONCRETE FLOOR SLABS ARE NOT REQUIRED)

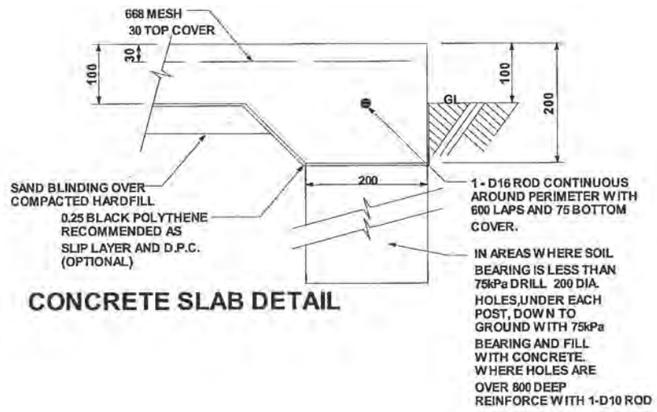

CONCRETE SLAB DETAIL

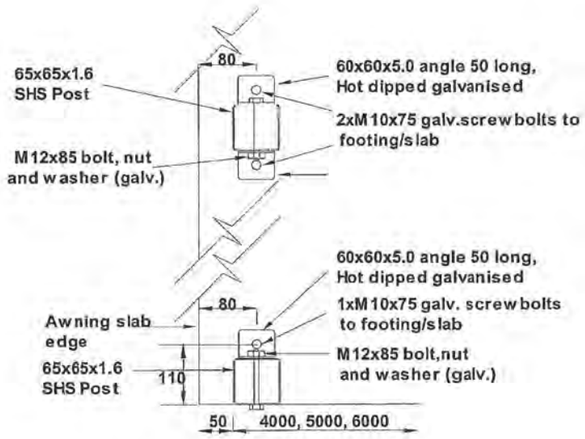

POST HOLD DOWN DETAILS

FREDERICK R SMITH chartered consulting engineer 363 Wairakei Rd, Burnside Christchurch 8053 Phone 03 348 1521	I certify that buildings erected in accordance with these drawings will comply with the New Zealand Building Code. F R Smith BE (civil) MIPENZ MACENZ MIEAust CPEng RPEQ (6225)	TOTALSPAN A Division of VERSATILE BUILDINGS LTD 112 WATERLOO ROAD, HORNBY P.O. BOX 11-013, CHRISTCHURCH PH: (09) 261 2306 FAX: (09) 262 1535	Drawing Title: **PORTAL BUILDING** **AWNING FOUNDATION DETAILS**	For: Tony Ward Kotare Street Waikanae Kapiti Page 14 of 14

Date Drawn:	10/02/2010
Main Building Length:	5914mm
Main Building Width:	3964mm
Main Building Area:	23.443m²
Awning Length:	6000mm
Awning Width:	4000mm
Awning Area:	24.000m²
Total Building Length:	5914mm
Total Building Width:	7964mm
Total Building Area:	47.443m²
Stud Height:	2700
Wind Rating:	High (A6-A7)
Bay Size:	3000
Cladding:	7 Rib Profile Colour: TBC
Foundation:	Concrete Slab

Notes:
The design has been checked in accordance with B1/VM1, B1/VM4 and B2 of the approved documents issued by the Department of Building and Housing (DHB) and the work is described on drawings prepared by Frederick R Smith, Chartered Professional Engineer.

Durability requirements for wall cladding detailed in Manufacturers Statement-Durability.

This specification is to be read in conjunction with the attached Totalspan Specification drawings and Producer Statement by Frederick R Smith, Chartered Professional Engineer.

Construction to comply with the New Zealand Building Code.

COPYRIGHT: THESE DRAWINGS MUST NOT BE REPRODUCED WITHOUT THE EXPRESS PERMISSION OF SPANBILD NEW ZEALAND LTD.

TOTALSPAN BUILDINGS
A Division of Spanbild New Zealand Ltd
112 Waterloo Road, Hornby,
P.O.Box 11-013, Christchurch
PH: (09) 261 2306 FAX: (09) 262 1535

PREPARED BY: Kevin Calcott, Wellington-Horowhenua, 04 297 0033
FOR: Tony Ward
REFERENCE: KevinC-1903

SITE ADDRESS: Kotare Street
Waikanae
Kapiti

SPECIFICATIONS

BC 110397

DIMENSIONS IN mm UNLESS OTHERWISE STATED THIS IS A C.A.D. DRAWING AND MUST NOT BE ALTERED BY MANUAL METHODS

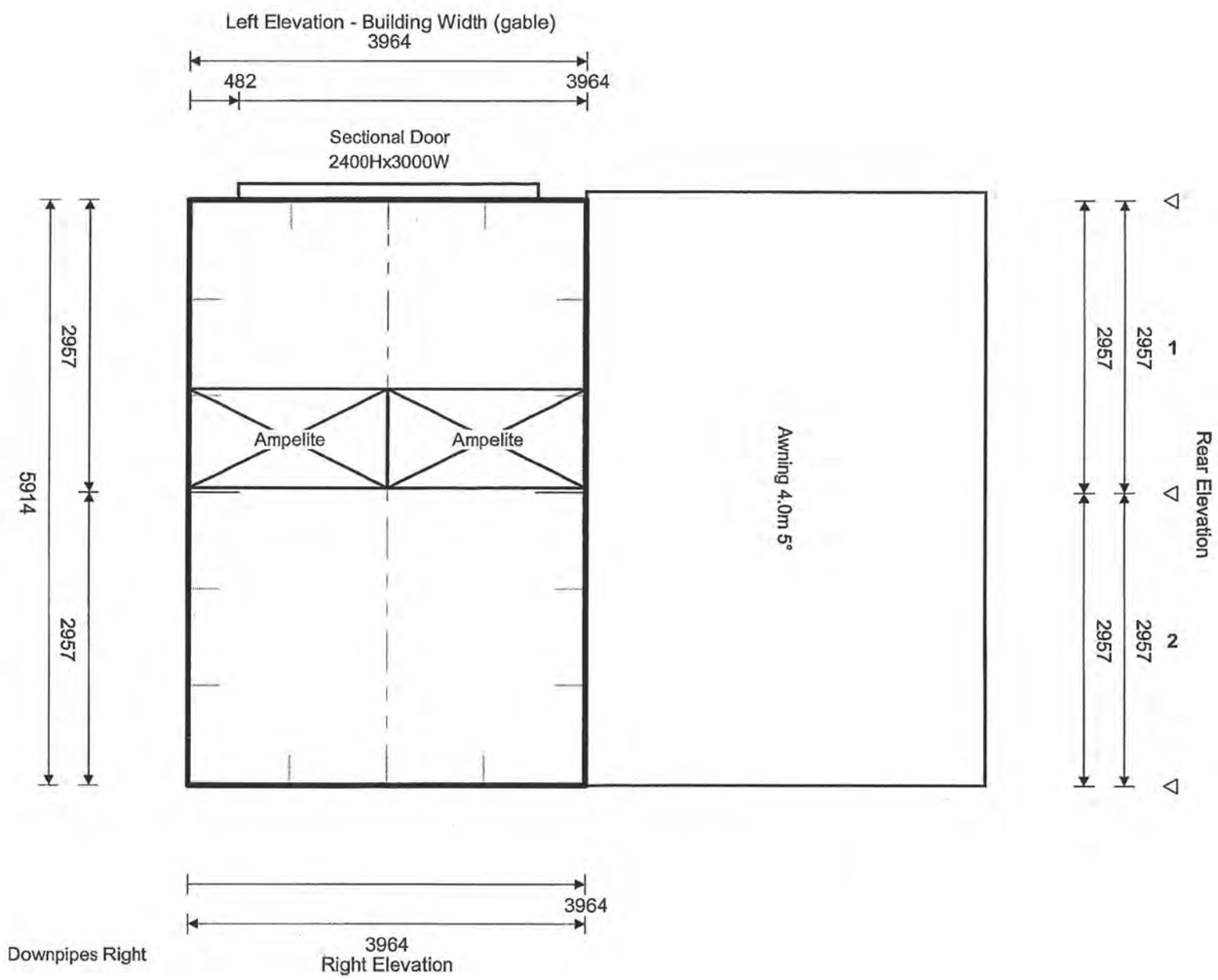

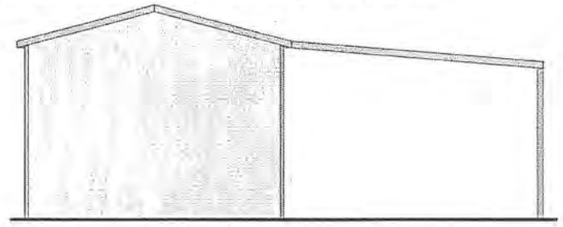

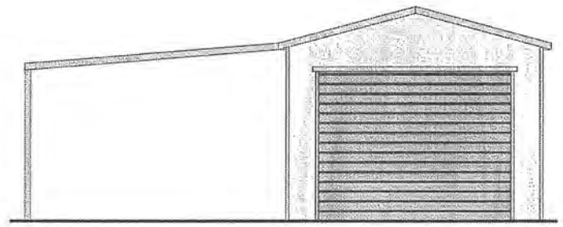

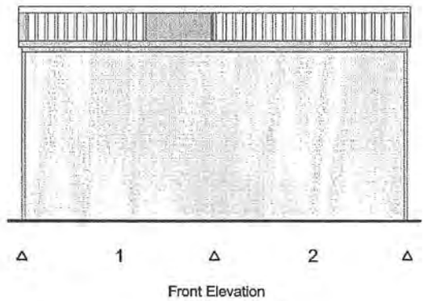

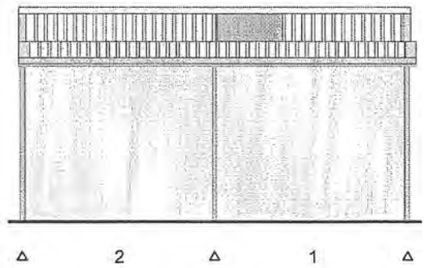

COPYRIGHT: THESE DRAWINGS MUST NOT BE REPRODUCED WITHOUT THE EXPRESS PERMISSION OF SPANBILD NEW ZEALAND LTD.

TOTALSPAN BUILDINGS
A Division of Spanbild New Zealand Ltd
112 Waterloo Road, Hornby,
P.O.Box 11-013, Christchurch
PH: (09) 261 2306 FAX: (09) 262 1535

PREPARED BY: Kevin Calcott, Wellington-Horowhenua, 04 297 0033

FOR: Tony Ward

REFERENCE: KevinC-1903

SITE ADDRESS: Kotare Street
Waikanae
Kapiti

N.T.S

PLAN & ELEVATIONS

Sheet 2 of 7

BC 110397

DIMENSIONS IN mm UNLESS OTHERWISE STATED THIS IS A C.A.D. DRAWING AND MUST NOT BE ALTERED BY MANUAL METHODS

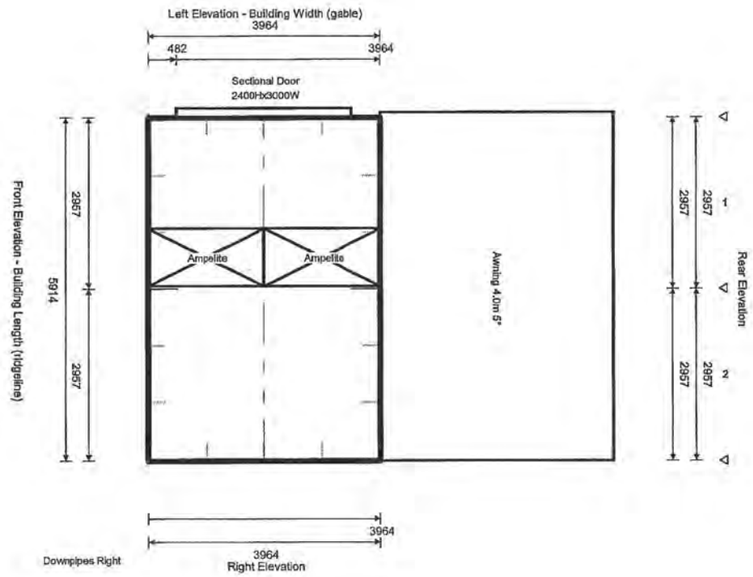

COPYRIGHT: THESE DRAWINGS MUST NOT BE REPRODUCED WITHOUT THE EXPRESS PERMISSION OF SPANBILD NEW ZEALAND LTD.

TOTALSPAN BUILDINGS
A Division of Spanbild New Zealand Ltd
112 Waterloo Road, Hornby,
P.O.Box 11-013, Christchurch
PH: (09) 261 2306 FAX: (09) 262 1535

PREPARED BY: Kevin Calcott, Wellington-Horowhenua, 04 297 0033

FOR: Tony Ward

REFERENCE: KevinC-1903

SITE ADDRESS: Kotare Street
Waikanae
Kapiti

Scale 1 : 100

PLAN

Sheet 3 of 7

DIMENSIONS IN mm UNLESS OTHERWISE STATED THIS IS A C.A.D. DRAWING AND MUST NOT BE ALTERED BY MANUAL METHODS

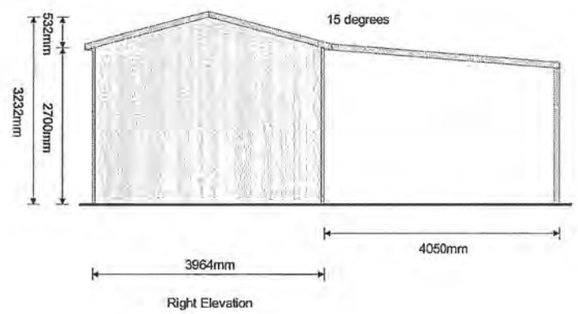

Right Elevation

COPYRIGHT: THESE DRAWINGS MUST NOT BE REPRODUCED WITHOUT THE EXPRESS PERMISSION OF SPANBILD NEW ZEALAND LTD.

TOTALSPAN BUILDINGS
A Division of Spanbild New Zealand Ltd
112 Waterloo Road, Hornby,
P.O.Box 11-013, Christchurch
PH: (09) 261 2306 FAX: (09) 262 1535

PREPARED BY: Kevin Calcott, Wellington-Horowhenua, 04 297 0033

FOR: Tony Ward

REFERENCE: KevinC-1903

SITE ADDRESS: Kotare Street
Waikanae
Kapiti

Scale 1 : 100

RIGHT ELEVATION

Sheet 4 of 7

TOTALSPAN®

GARAGES • SHEDS • CARPORTS

Engineered By:

F R Smith Consultant

consulting engineer, civil - structural

Producer Statement
Structural Details

CLIENT:

Tony Ward

Kotare Street
Waikanae
Kapiti

BUILDING:

Size & Stud Height: 5.914m long x 3.964m wide, with 2.700m stud height, Bay Size 3.000m
Awning(s): 1 x Awning 6.000m long x 4.000m wide
Wind Zone: HIGH (A6-A7)
Area: 47.443m²

Steel Framed Enclosed Buildings

NOTES

Copyright: These drawings must not be reproduced without express permission from Fred R. Smith Consultants and Versatile Buildings Limited

INDEX

Cover Page (this page)
Producer Statement: F.R. Smith Consultants - Design
Producer Statement: Versatile Buildings/BHP - Durability
Specifications - Building Components
Site Plan
Building Elevations
Foundation Details
Section - End Wall
Building Details
Roof Plans
Flashing Details
Bracing Reference
Awning
Awning Foundation

RECEIVED
KAPITI COAST DISTRICT COUNCIL
00031

I certify that buildings erected in accordance with these drawings will conform to the requirements of the New Zealand and Australian Building Codes.

F R Smith BE (civil) MIPENZ, MACENZ, MEIAust, no. 2410880, Cp.Eng. RPEQ (6225)

MANUFACTURERS STATEMENT - DURABILTY

Cladding

To satisfy the requirements of Clause B2:"Durability" of the NZBC and to ensure the cladding material meets a **15-year durability** life the following provisions must apply:

Cladding Range of Product and Use

- Coating Type: Zinc/Aluminium & Painted (Coloured Steel).
- Steel thickness range: 0.35mm - 0.55mm BMT
- Steel grade range: G300 - G550
- Application: Standard Totalspan Roof and Wall Cladding
- Profile: Totalspan 7 Rib, Totalspan 6 Rib

Requirements, Limitations and Exclusions

- Fixing and installation of the cladding must be done exactly in accordance with Totalspan Buildings instructions and specifications.
- Normal and regular maintenance must be carried out on the exterior surface of the cladding and the following guide must be followed to ensure the durability requirements are met.

Regular Maintenance

- **Normal Maintenance to be completed in accordance with Durability - Acceptable Solution B2/AS 2.1.3**
- **Corrosion Zones 1, 2, 3, 4. (*Reference NZS 3604:1999 Corrosion Zone Figure 4.1)**

  Rain-washing only required on ***exposed*** *(open to airborne salts and rain wetting)* material. ***Sheltered*** *(open to airborne salts, but not rain washed)* or protected areas such as under spouting, top-cladding sheets and tops of doors require washing every 3 months.

- **Sea Spray Zones (Within 500m from the sea or 100m from sheltered harbours or inlets – *Reference NZS 3604:1999 4.2.3) and areas of Geothermal Activity (*Reference NZS 3604:1999 4.2.4).**

  Rain-washing only required on ***exposed*** *(open to airborne salts and rain wetting)* areas. ***Sheltered*** *(open to airborne salts, but not rain washed)* and protected areas such as under spouting, top cladding and tops of doors require washing down every month and whenever corrosive salts are present.

Extended Maintenance, Painting or Repainting

- **Extended Durability**

  Once the metallic coating or the paint system has weathered away, signs of red rust for bare material or signs of the metallic coating for painted material, painting of the entire surface is required to extend the life of the cladding product. Paint manufacturers recommendations are to be followed for surface preparation and paint type to be used.

- **Evident Corrosion**

  Areas that show signs of white or red rust/corrosion (typically in unwashed areas) require cleaning back with a stiff brush and cleaner to remove all dust, surface contaminants and corrosion products and present a sound substrate for painting. Priming of the surface and application of two coats of paint as per the Paint Manufacturer's recommendations is then required.

  Particular attention needs to be paid to laps (side, end, flashing etc) where earlier corrosion may start due to moisture and dirt entrapment.

  If evident corrosion is not treated quickly rapid deterioration of the sheet may occur which could result in perforation. At this stage replacement of the affected sheet is the best option.

Steel Framing

To satisfy the requirements of Clause B2:"Durability" of the NZBC and to ensure the structural framing material meets a 50-year durability life the following provisions must apply:

Steel Framing Range of Product and Use

- Coating Type: Galvanised
- Steel thickness range: 0.75mm – 2.4mm BMT
- Steel grade range: G450 – G550
- Application: Standard Totalspan Purlins, Girts, Portal Frames, Door Jambs, Wall Uprights, Bridging
- Profile: C Sections – 80x40, 150x64, 220x64, 250x85
  Z Sections – 100x53, 150x65
  Tophat Sections – 100x163, 120x170, 150x183

Regular Maintenance

- **Normal Maintenance to be completed in accordance with Durability - Acceptable Solution B2/AS 2.1.3**
- **Corrosion Zones 1, 2, 3, 4. (*Reference NZS 3604:1999 Corrosion Zone Figure 4.1)**

  Rain-washing only required on ***exposed*** *(open to airborne salts and rain wetting)* material. ***Sheltered*** *(open to airborne salts, but not rain washed)* or protected areas such as under spouting, top-cladding sheets and tops of doors require washing every 3 months.

- **Sea Spray Zones (Within 500m from the sea or 100m from sheltered harbours or inlets – *Reference**
- **NZS 3604:1999 4.2.3) and areas of Geothermal Activity (*Reference NZS 3604:1999 4.2.4).**

  Rain-washing only required on ***exposed*** *(open to airborne salts and rain wetting)* areas. ***Sheltered*** *(open to airborne salts, but not rain washed)* and protected areas such as under spouting, top cladding and tops of doors require washing down every month and whenever corrosive salts are present.

References

1. NZBC – Compliance Document – Clause B2 - Durability
2. NZS 3604, Clause 4, Durability*

* - Totalspan Buildings acknowledges and understands that NZS 3604 is a Timber Framed Building standard. Totalspan Buildings has used NZS 3604 as a reference only to identify Corrosion Zones, Sea Spray Zones and areas of Geothermal activity.

Building Tables

Zoned:	T.C.2 Rural		
Wind Zone:	High (A6-A7)	**Wind Region:**	Region A6-A7 (High)
Bay Size:	3.0m		
Live Roof Load:	0.25 kpa		
Roof Snow Load:	0.86kpa		
Inner Purlins:	C80x40(2)	**Row Numbers:**	6
Ridge & Gutter Purlins:	C80x40		
Girts:	B80x40	**End Wall:**	3
End Wall Post - On Edge:	B80x40		
Roof Frames - Portals:	C15010		

GENERAL

1 - All work shall conform to the New Zealand Building Code.
2 - Check diagonals to ensure building is square.

LOADINGS

1 - Buildings are designed to AS/NZS 1170 for NZS 3604 HIGH and VERY HIGH. Design Wind Speeds to limit state levels of 45 and 50m/s, T.C.2 roof live load of 0.25kPa, and basic Roof Snow loads of 0.86kPa. Heavier snow loads will be a specific design as will buildings used for habitable purposes.
2 - The roofing is not designed for point loads of 1 Kn.

FOUNDATIONS

1 - Support ground to have a safe bearing capacity of at least 75 kPa. In weaker ground building loads to be taken to subsoil which has a bearing capacity of at least 75 kPa.

CONCRETE

1 - Remove vegetation, 60mm of top soil and loose material from the site of the building, backfill with compacted hardfill, if required, and lay a blinding of sand to the underside of the concrete slab. Ensure the surface of the slab will be at least 100mm above the highest level of cleared ground around the slab.
2 - Concrete shall have a maximum aggregate size of 20mm, slump of 80mm maximum and a 20 MPa compression strength at 28 days.
3 - The concrete floor slab shall be 100mm thick with a 200 x 200 mm edge thickening and a D16 rod continuous around the perimeter of the slab with 600 laps and 75 bottom cover.
4 - Concrete slab to be reinforced with 668 mesh placed 30mm maximum below the slab surface with 225mm laps.
5 - Provide a 0.25mm black polythene dampproof and slip layer under the slab taped with 100mm laps (optional but recommended).
6 - Fix roof frames to concrete with M10 zinc screwbolts screwed into holes drilled in the slab.

STEELWORK

1 - All structural framing members shall be G550-1.0mm BMT, G500-1.2mm BMT, G450-1.5mm, 1.9mm BMT grade steel galvanised to Z200 (G550 for 80 x 40 boxed and single channels). Cleats to be G450, Z200.
2 - Purlins and girts shall be 80 x 40 x 0.75 B.M.T. lipped, crimped channel located at centres shown on the drawings.
3 - Boxed members to be flange fixed with #10 Tek screws at 600 centres.
4 - Screws to be #10 x 16mm long Tek screws Class 3 zinc plated, fixed at a minimum edge distance of 6mm and to a12mm minimum pitch.
5 - Girts to be connected with 2 #10 Tek screws each side of girt.
6 - Steelwork shall conform to:

NZ/AS 4600 Cold Formed Steel Structures Code
NZ/AS 1397:1993
AS 1562:1962 Design and Installation of Metal Roofing
AS 1111/1112 Hex Commercial Bolts and Screws
AS 3566 Self Drilling Screws for Building

CLADDING

1 - Roof and wall sheeting shall be 0.35 B.M.T., G550 grade steel zincalumed to AZ150 and rolled to profile as detailed.
2 - Roof sheets shall be fixed to ridge and eaves purlins with a Tek screw at every rib, as shown, tekscrew to alternative ribs at intermediate fixings, all complete with neoprene washers tigtened firmly but not to form depressions in the roof cladding. Ensure all roof fixings are waterproof.
3 - Wall sheeting shall be fixed to the eave purlins and to the rafters of the end wall frames with a Tek screw at third points of each pan and to third points of alternate pans at other girts and fixings.
4 - Ridges, gables and all penetrations to be flashed with similar sheet steel.
5 - Guttering to be fixed with Tek screws and joint sealed with silicone. Fit downpipes to guttering to discharge to an approved stormwater drainage system, provided by the Owner.
6 - Frame for personnel door and windows with 80 x 40 x 0.75 unlipped channels. Flange connect members with 2 screws to each flange Fix jambs to floor with 40x40x1.2 angle cleat having 1/M10 screwbolt to concrete and 2 Tek screws to jamb.

FREDERICK R SMITH
chartered consulting engineer
363 Wairakei Rd, Burnside
Christchurch 8053
Phone 03 348 1521

I certify that buildings erected in accordance with these drawings will comply with the New Zealand Building Code.

F R Smith
BE (civil) MIPENZ MACENZ MIEAust
CPEng RPEQ (6225)

TOTALSPAN
A Division of VERSATILE BUILDINGS LTD
112 WATERLOO ROAD, HORNBY
P.O. BOX 11-013, CHRISTCHURCH
PH: (09) 261 2306 FAX: (09) 262 1535

Drawing Title:
PORTAL BUILDING SPECIFICATIONS

For: Tony Ward
Kotare Street
Waikanae
Kapiti

SCREWBOLT NOTE

1 EMBEDMENT DEPTH OF SCREW BOLTS= 70mm
2 SCREWBOLTS SHALL BE M10/75 ZINC PLATED IN 10DIA. HOLES 80 DEEP.

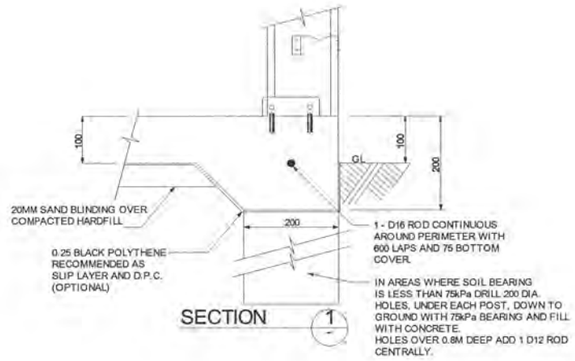

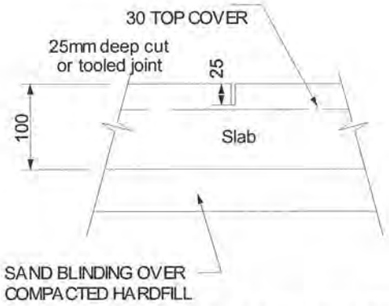

CONTROL JOINT DETAIL (TYP.)

CONCRETE SLAB NOTE:

Concrete slabs to have construction joints keyed during placing or cut in panels not exceeding the following dimensions:

Unreinforced	3m x 3.9m
Fibre reinforced	4m x 6m (Fibre dosage 0.7kg/cu.m)
Mesh reinforcement	6m x 12m (668 mesh, 225 laps, 30mm top cover)

For slabs 15m to 30m long, form keyed joints at mid length of floors. For slabs over 30m long keyed joints to be at a maximum of 15m centres.

BOXED C80x40 END WALL UPRIGHT

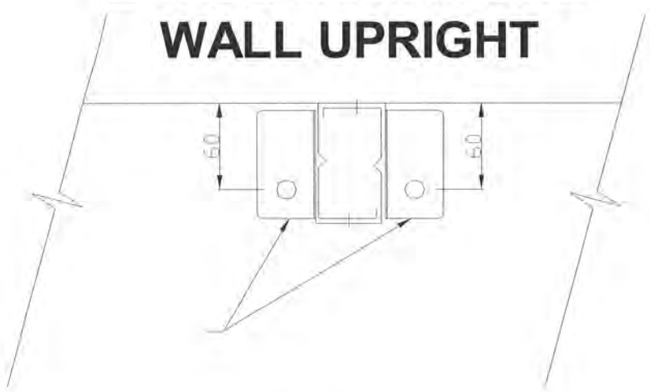

40X40X1 ANGLE 75 LONG WITH
4#10 TEKS OR 2/M10 BOLTS TO POST
& 1/M10 SCREWBOLTS TO CONCRETE.

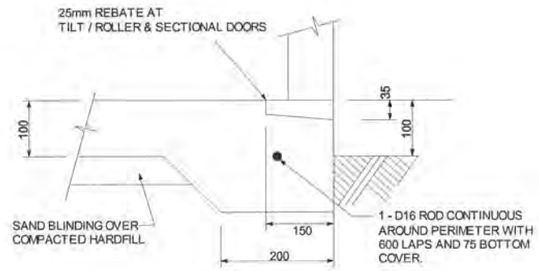

P.A. DOOR & GARAGE ENTRY
SLAB EDGE DETAIL (TYP.)

FREDERICK R SMITH
chartered consulting engineer
363 Wairakei Rd, Burnside
Christchurch 8053
Phone 03 348 1521

I certify that buildings erected in accordance with these drawings will comply with the New Zealand Building Code.

F R Smith
BE (civil) MIPENZ MACENZ MIEAust
CPEng RPEQ (6225)

TOTALSPAN
A Division of VERSATILE BUILDINGS LTD
112 WATERLOO ROAD, HORNBY
P.O. BOX 11-013, CHRISTCHURCH
PH: (09) 261 2306 FAX: (09) 262 1535

Drawing Title:
PORTAL BUILDING
FOUNDATION DETAILS

For: Tony Ward
Kotare Street
Waikanae
Kapiti

C150
END WALL FRAME

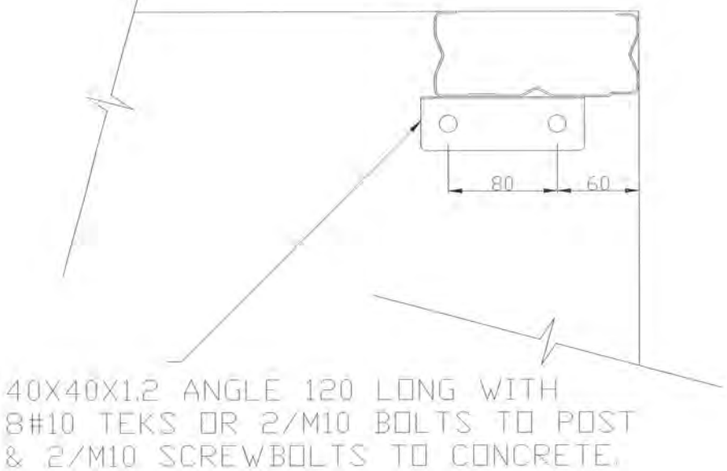

SINGLE C150
INTERIOR FRAME

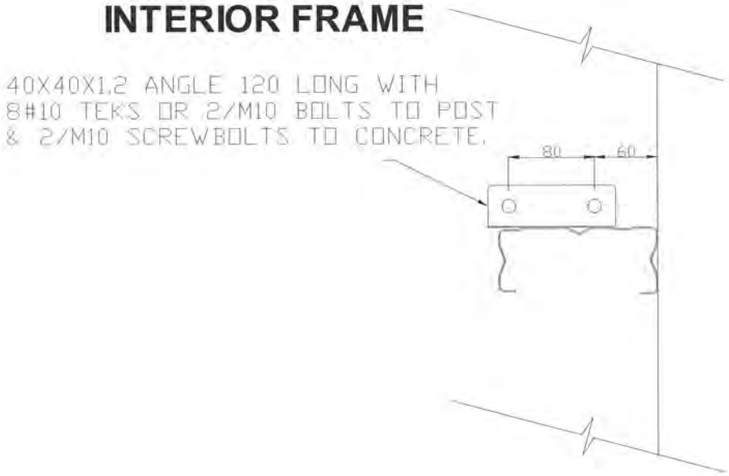

FREDERICK R SMITH **chartered consulting engineer** 363 Wairakei Rd, Burnside Christchurch 8053 Phone 03 348 1521	I certify that buildings erected in accordance with these drawings will comply with the New Zealand Building Code. F R Smith BE (civil) MIPENZ MACENZ MIEAust CPEng RPEQ (6225)	TOTALSPAN **A Division of VERSATILE BUILDINGS LTD** 112 WATERLOO ROAD, HORNBY P.O. BOX 11-013, CHRISTCHURCH PH: (09) 261 2306 FAX: (09) 262 1535	Drawing Title: **PORTAL BUILDING** **FOUNDATION DETAILS**	For: Tony Ward Kotare Street Waikanae Kapiti

Apex Height (mm): 3232
Wall Height (mm): 2700

Girts Centre Lines mm (above floor level):					
Girts Rows:	**1**	**2**	**3**	**4**	**5**
	95	1200	2500	-	-

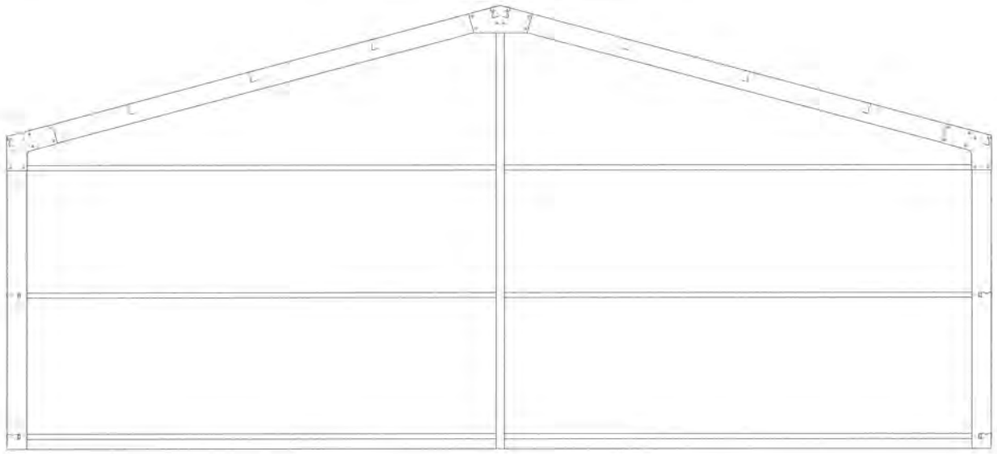

END WALL FRAME

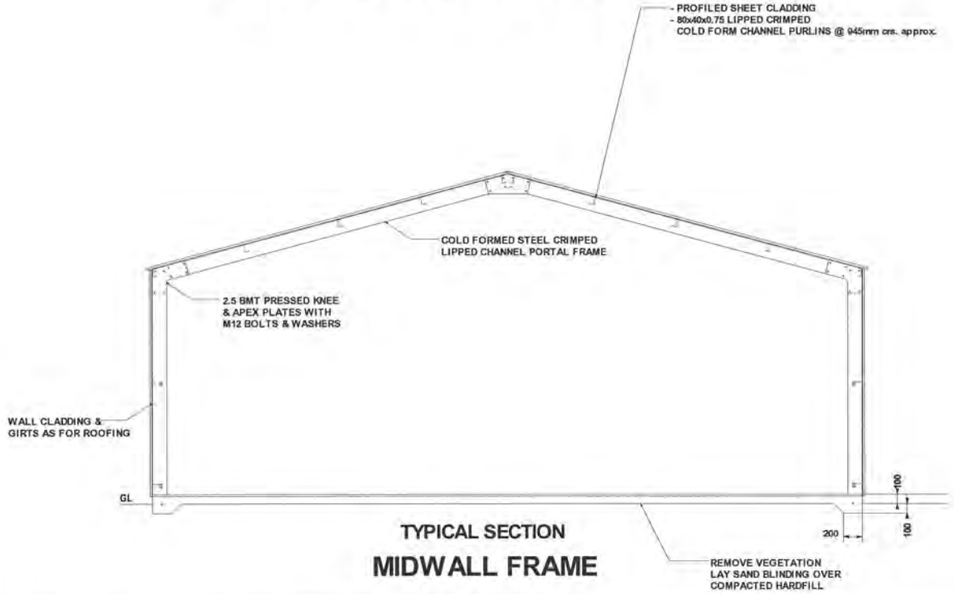

TYPICAL SECTION

MIDWALL FRAME

FREDERICK R SMITH **chartered consulting engineer** 363 Wairakei Rd, Burnside Christchurch 8053 Phone 03 348 1521	I certify that buildings erected in accordance with these drawings will comply with the New Zealand Building Code. F R Smith BE (civil) MIPENZ MACENZ MIEAust CPEng RPEQ (6225)	TOTALSPAN **A Division of VERSATILE BUILDINGS LTD** 112 WATERLOO ROAD, HORNBY P.O. BOX 11-013, CHRISTCHURCH PH: (09) 261 2306 FAX: (09) 262 1535	Drawing Title: **PORTAL BUILDING** **SECTION - END WALL**	For: Tony Ward Kotare Street Waikanae Kapiti

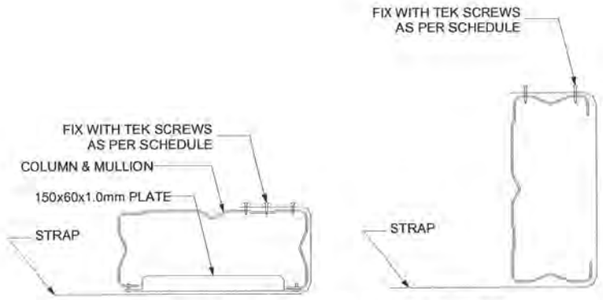

BRACING STRAP FIXING DETAIL
(FOR ALL CASES PER STRAP)

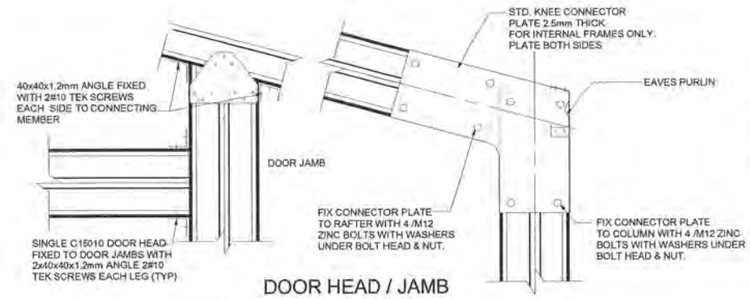

DOOR HEAD / JAMB
CONNECTION DETAIL
TYP. DETAIL B

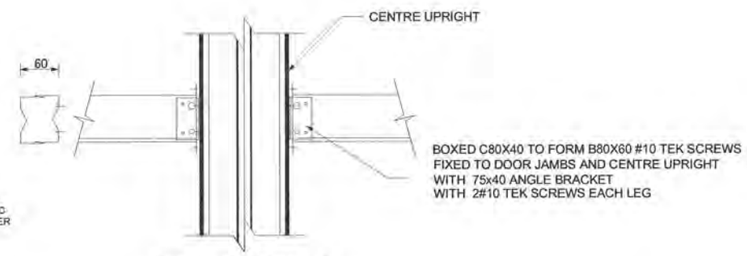

TYP. DETAIL C

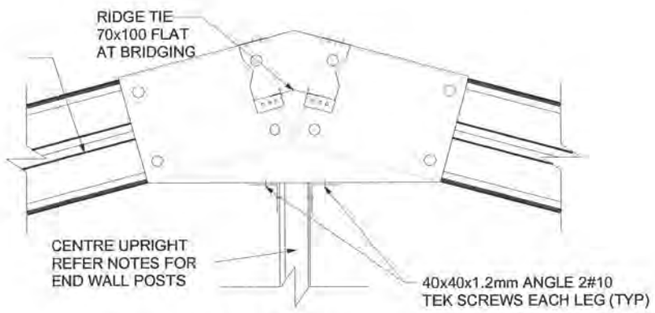

TYP. DETAIL A

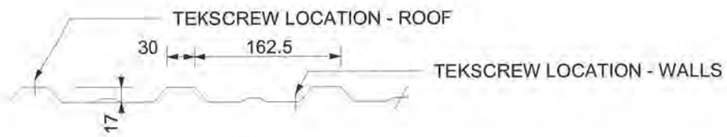

SHEETING PROFILE 0.35 T.C.T.

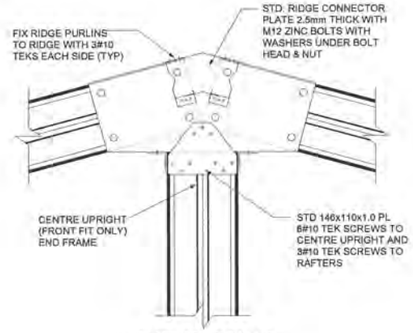

TYP. DETAIL D

FREDERICK R SMITH
chartered consulting engineer
363 Wairakei Rd, Burnside
Christchurch, 8053
Phone 03 348 1521

I certify that buildings erected in accordance with these drawings will comply with the New Zealand Building Code.

F R Smith
BE (civil) MIPENZ MACENZ MIEAust
CPEng RPEQ (6225)

TOTALSPAN
A Division of VERSATILE BUILDINGS LTD
112 WATERLOO ROAD, HORNBY
P.O. BOX 11-013, CHRISTCHURCH
PH: (09) 261 2306 FAX: (09) 262 1535

Drawing Title:

PORTAL BUILDING

BUILDING DETAILS

For: Tony Ward
Kotare Street
Waikanae
Kapiti

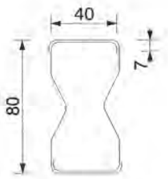

TYPICAL BOXED CRIMPED LIPPED CHANNEL SECTION (EX 0.75 BMT)

ALL PURLINS AND GIRTS SINGLE UNLESS NOTED TO BE BOXED.

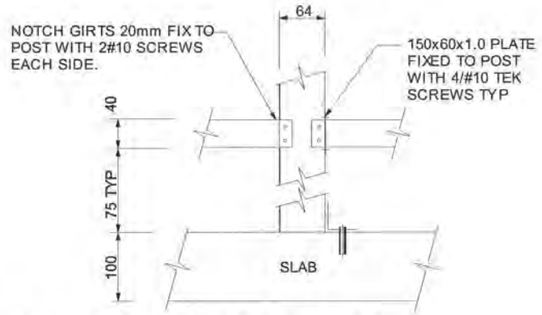

TYP. GIRT TO POST DETAIL

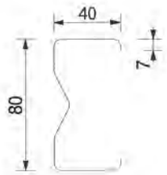

TYPICAL CRIMPED LIPPED CHANNEL SECTION (EX 0.75 BMT)

ALL PURLINS AND GIRTS SINGLE UNLESS NOTED TO BE BOXED.

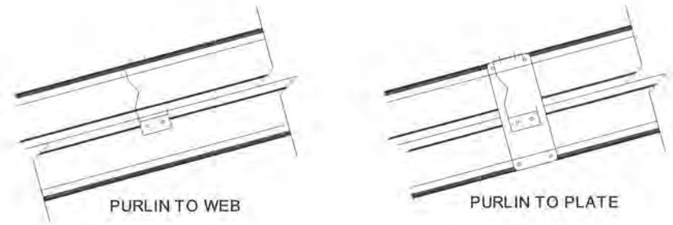

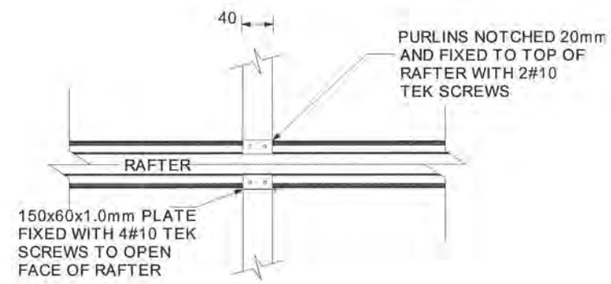

TYPICAL PURLIN TO RAFTER DETAILS

FREDERICK R SMITH
chartered consulting engineer
363 Wairakei Rd, Burnside
Christchurch, 8053
Phone 03 348 1521

I certify that buildings erected in accordance with these drawings will comply with the New Zealand Building Code.

F R Smith
BE (civil) MIPENZ MACENZ MIEAust
CPEng RPEQ (6225)

TOTALSPAN
A Division of VERSATILE BUILDINGS LTD
112 WATERLOO ROAD, HORNBY
P.O. BOX 11-013, CHRISTCHURCH
PH: (09) 261 2306 FAX: (09) 262 1535

Drawing Title:

PORTAL BUILDING

BUILDING DETAILS

For: Tony Ward
Kotare Street
Waikanae
Kapiti

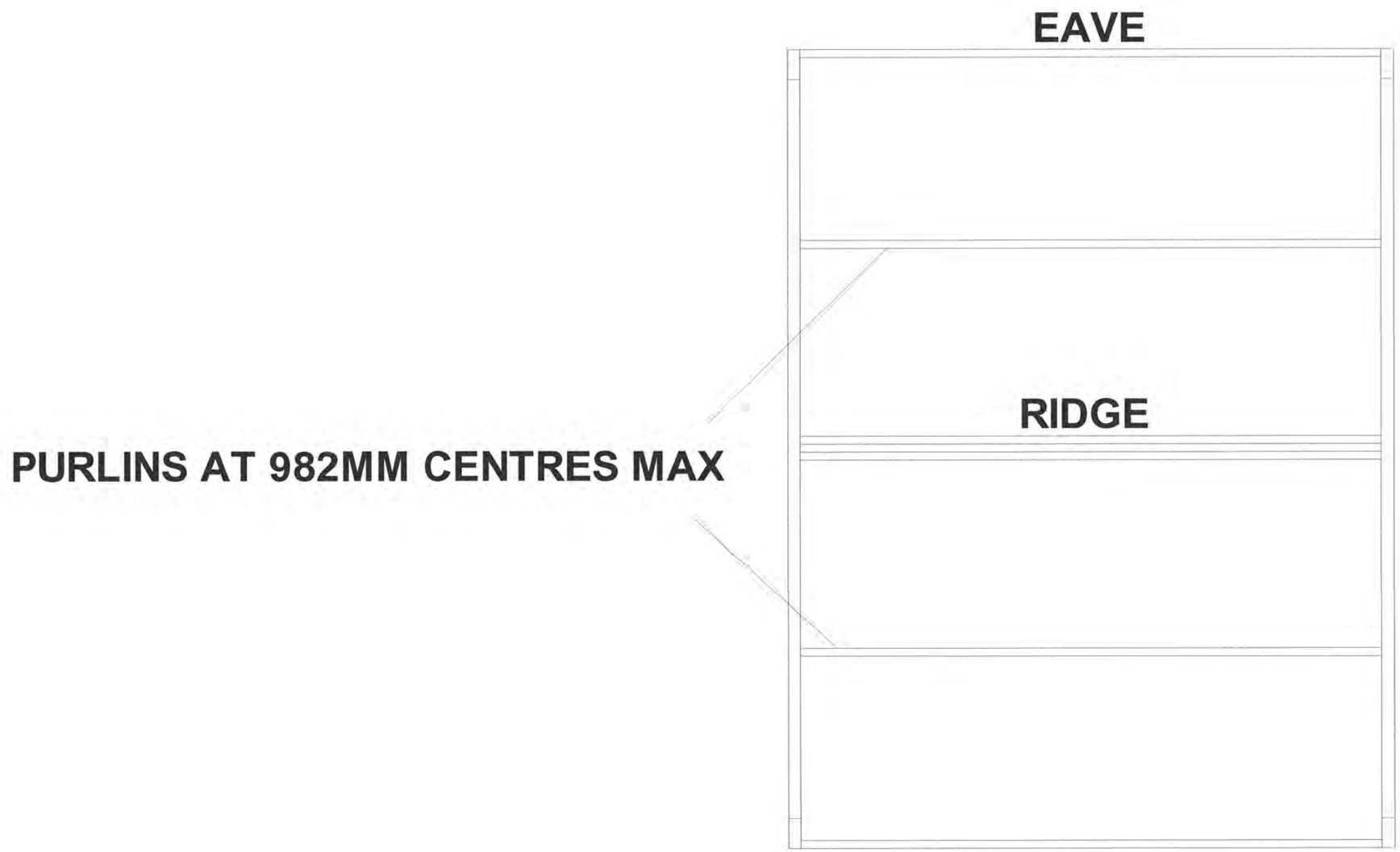

FREDERICK R SMITH
chartered consulting engineer
363 Wairakei Rd, Burnside
Christchurch 8053
Phone 03 348 1521

I certify that buildings erected in accordance with these drawings will comply with the New Zealand Building Code.

F R Smith
BE (civil) MIPENZ MACENZ MIEAust
CPEng RPEQ (6225)

TOTALSPAN
A Division of VERSATILE BUILDINGS LTD
112 WATERLOO ROAD, HORNBY
P.O. BOX 11-013, CHRISTCHURCH
PH: (09) 261 2306 FAX: (09) 262 1535

Drawing Title:

PORTAL FRAME

ROOF PLANS

For: Tony Ward
Kotare Street
Waikanae
Kapiti

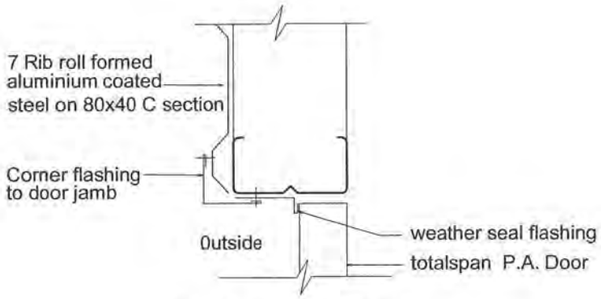

P.A. Door Jamb Detail

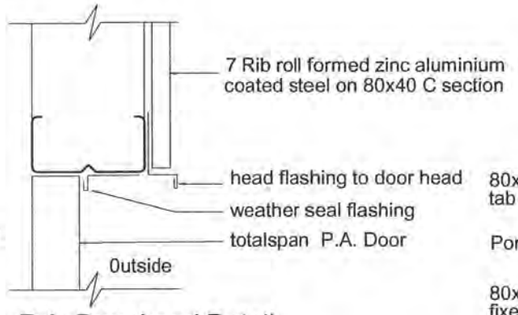

P.A. Door head Detail

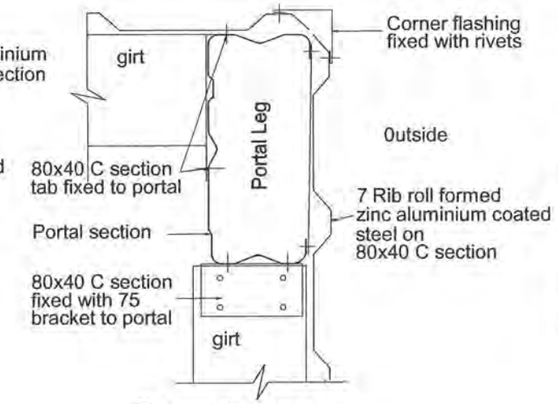

External corner

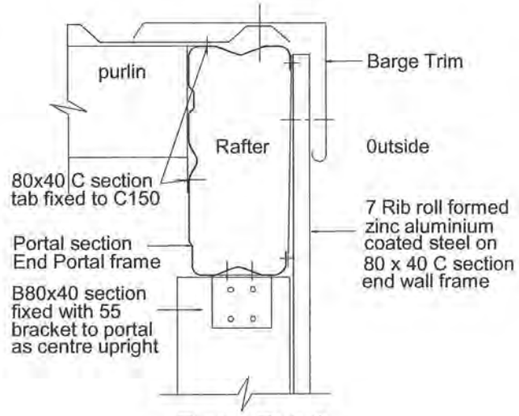

Barge Detail

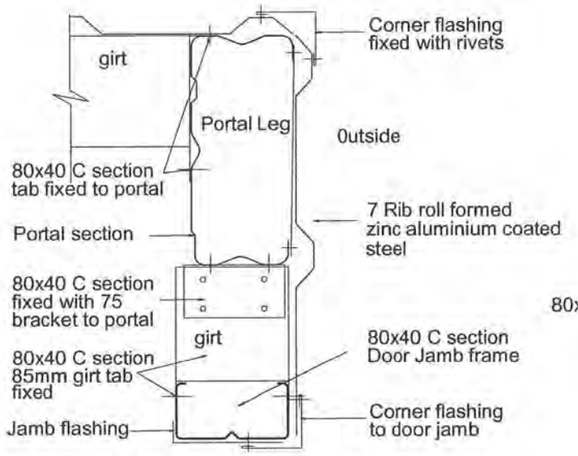

Roller Door Jamb Detail

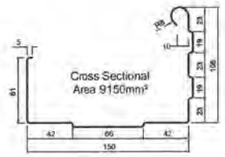

Gutter Profile

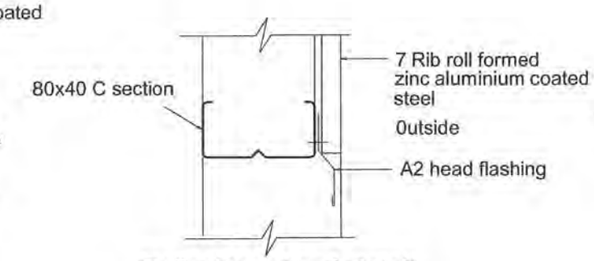

Roller Door head Detail

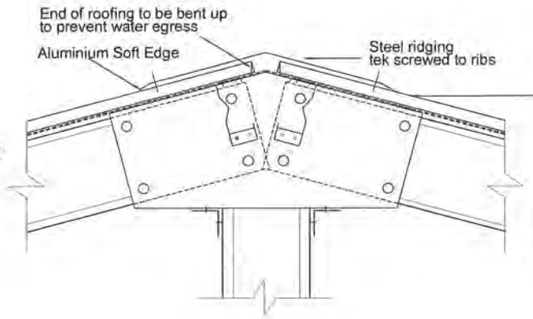

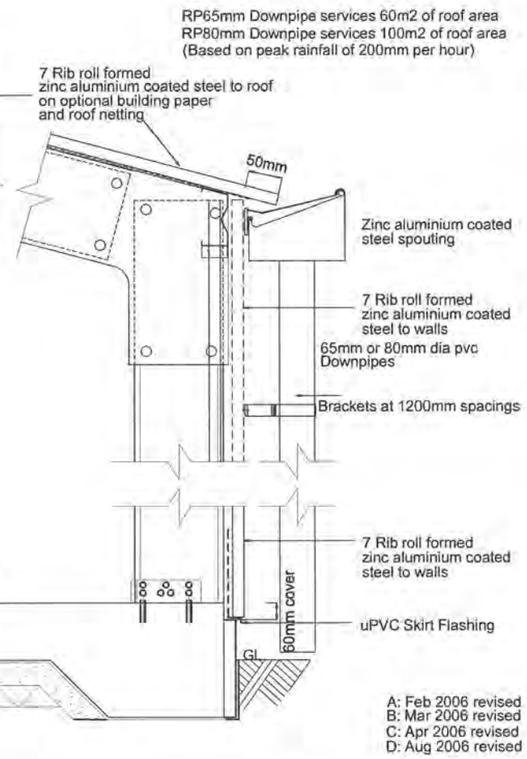

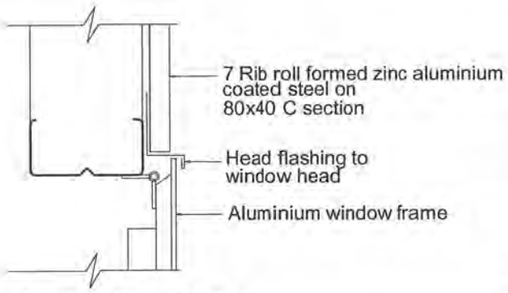

Window head Detail

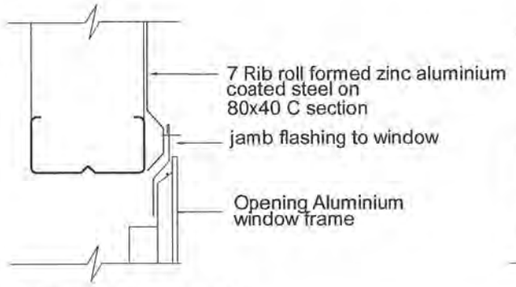

Window Jamb Detail

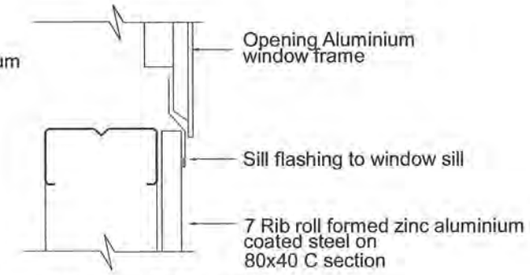

Window Sill Detail

A: Feb 2006 revised
B: Mar 2006 revised
C: Apr 2006 revised
D: Aug 2006 revised

FREDERICK R SMITH
chartered consulting engineer
363 Wairakei Rd, Burnside
Christchurch 8053
Phone 03 348 1521

I certify that buildings erected in accordance with these drawings will comply with the New Zealand Building Code.

F R Smith
BE (civil) MIPENZ MACENZ MIEAust
CPEng RPEQ (6225)

TOTALSPAN
A Division of VERSATILE BUILDINGS LTD
112 WATERLOO ROAD, HORNBY
P.O. BOX 11-013, CHRISTCHURCH
PH: (09) 261 2306 FAX: (09) 262 1535

Drawing Title:

PORTAL BUILDING

FLASHING DETAILS

NOTE;
1. Bracing shall be 27X0.6mm G550 steel strap fixed with 4 #10 tek screws each end.

2. BRACING LOCATION GABLE WALLS:
Building 2 to 4 Bays long, excluding garaport bays shall have 1 braced panel in either gable wall.
Building 5 bays and longer, excluding garaport bays shall have 1 braced panel in each of the gable walls.
When building is gable entry, bracing can be relocated to the opposite gable wall.

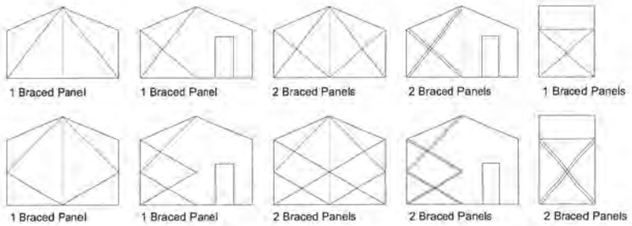

3. BRACING LOCATION SIDE WALLS
Buildings 2 to 4 bays long shall have 1 braced panel located as close as possible to the gable end wall on each side wall of the building.
Buildings 5 bays and longer excluding garaport bays shall have at least 2 braced panels in each side wall.
There must be 1 braced panel in the first four bays and 1 braced panel in the last four bays, both located as close as possible to the gable end walls and there must be no more than 5 bays between each braced panel.

4. BRACING RELOCATION SIDE WALLS:
If a braced panel can not be acheived with the above rules, then the conflicting braced panel shall be relocated in the opposite wall side and as close as possible directly opposite the original location.

If 1 or more braced panels are relocated from one side wall to the other, then add 1 braced panel to a gable wall that is closest to the original position of the relocated braced panel.

5. ROOF BRACING LOCATION
Buildings, 2 to 4 bays excluding garaport bays shall have 1 braced panel located in one of the end bays
Buildings, 5 bays and longer excluding Garaport bays, shall have at least 3 braced panels, 2 located in each end bay and there must be no more than five bays between each braced panel.

Other configurations of openings shall be specific design.

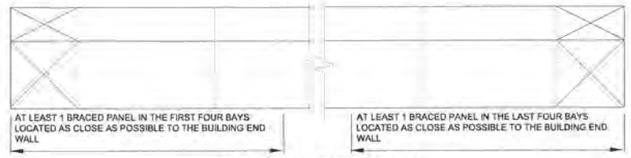

SIDE WALL ELEVATION

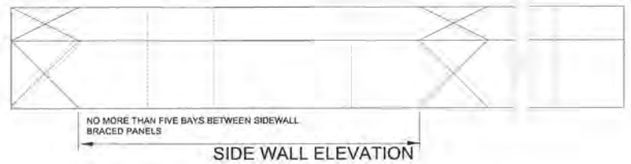

SIDE WALL ELEVATION

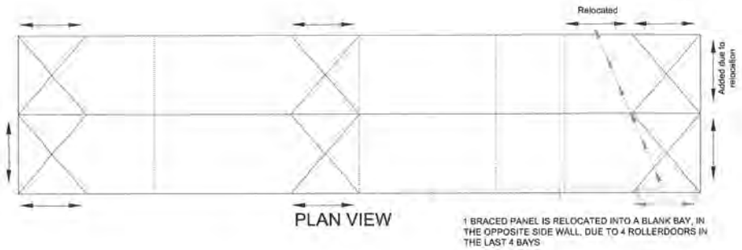

PLAN VIEW

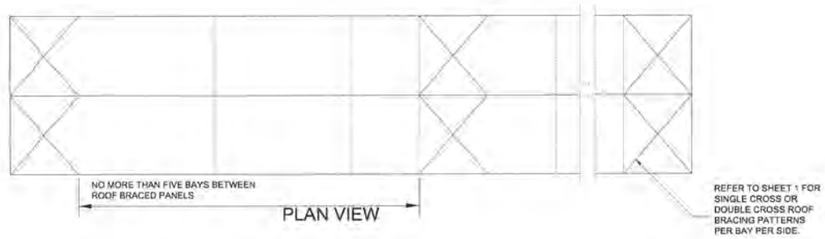

PLAN VIEW

FREDERICK R SMITH
chartered consulting engineer
363 Wairakei Rd, Burnside
Christchurch 8053
Phone 03 348 1521

I certify that buildings erected in accordance with these drawings will comply with the New Zealand Building Code.

F R Smith
BE (civil) MIPENZ MACENZ MIEAust
CPEng RPEQ (6225)

TOTALSPAN
A Division of VERSATILE BUILDINGS LTD
112 WATERLOO ROAD, HORNBY
P.O. BOX 11-013, CHRISTCHURCH
PH: (09) 261 2306 FAX: (09) 262 1535

Drawing Title:
PORTAL BUILDING
BRACING - WALLS AND ROOF

For: Tony Ward
Kotare Street
Waikanae
Kapiti

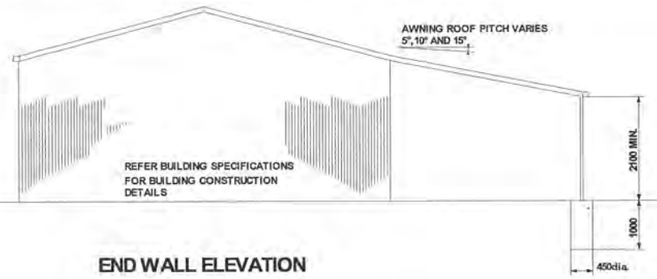

END WALL ELEVATION

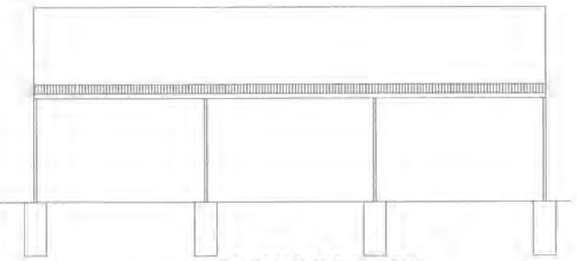

SIDE WALL ELEVATION
(NOT TO SCALE)
3M BAY SPACING

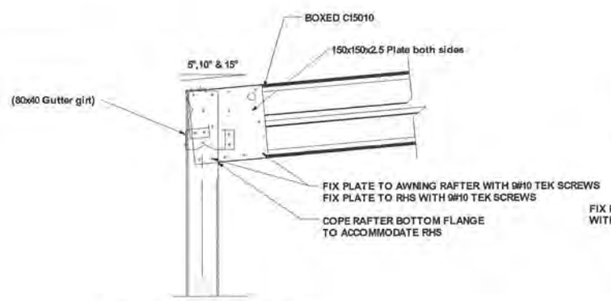

POST CONNECTION

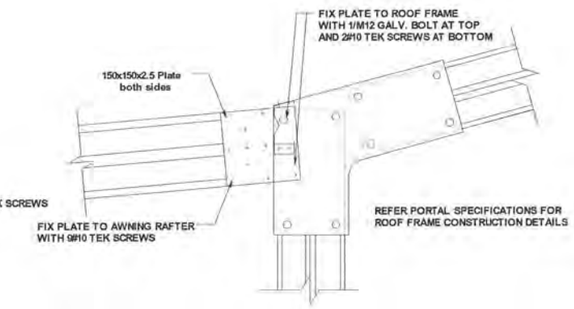

ROOF FRAME CONNECTION

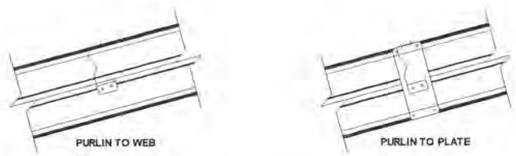

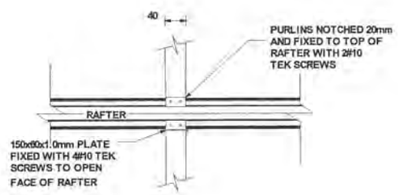

TYPICAL PURLIN TO RAFTER DETAILS

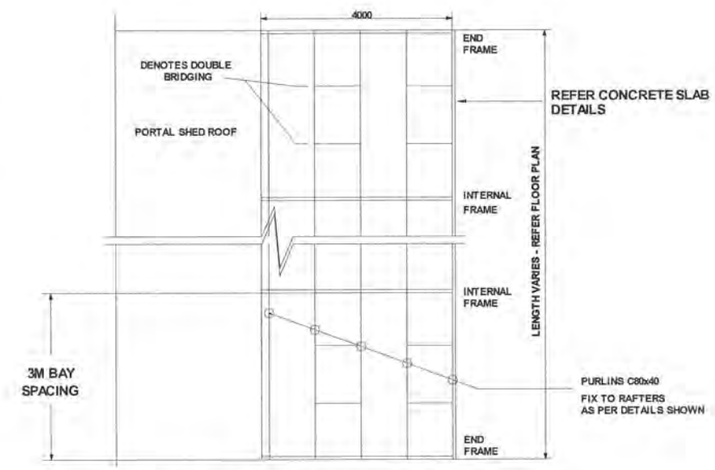

AWNING ROOF LAYOUT
(NOT TO SCALE)

Awning Rafters: B15010

Awning Purlins (Rows:5): C80x40(2)

FREDERICK R SMITH **chartered consulting engineer** 363 Wairakei Rd, Burnside Christchurch 8053 Phone 03 348 1521	I certify that buildings erected in accordance with these drawings will comply with the New Zealand Building Code. F R Smith BE (civil) MIPENZ MACENZ MIEAust CPEng RPEQ (6225)	TOTALSPAN **A Division of VERSATILE BUILDINGS LTD** 112 WATERLOO ROAD, HORNBY P.O. BOX 11-013, CHRISTCHURCH PH: (09) 261 2306 FAX: (09) 262 1535	Drawing Title: **AWNING 4M** **AWNING**	For: Tony Ward Kotare Street Waikanae Kapiti

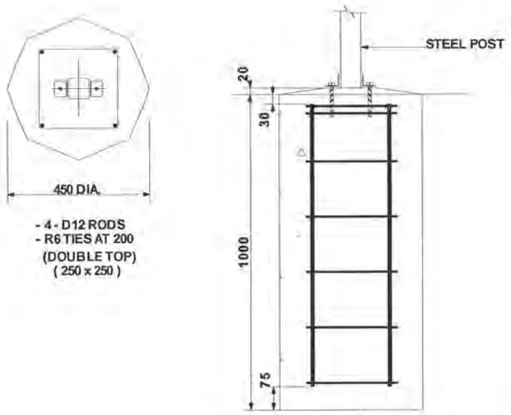

CONCRETE FOOTINGS

(FOR AWNINGS AND WHERE CONCRETE FLOOR SLABS ARE NOT REQUIRED)

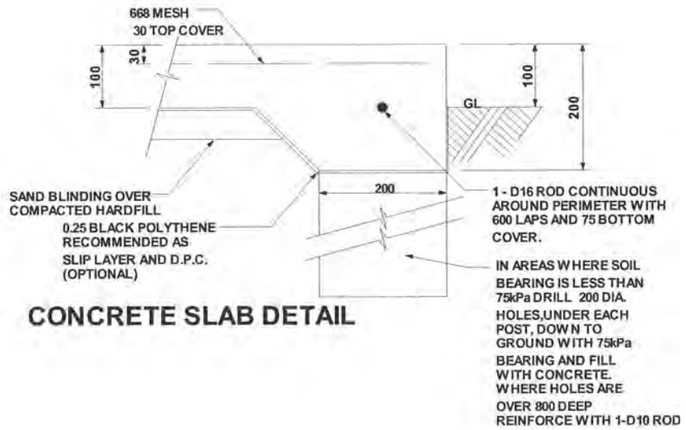

CONCRETE SLAB DETAIL

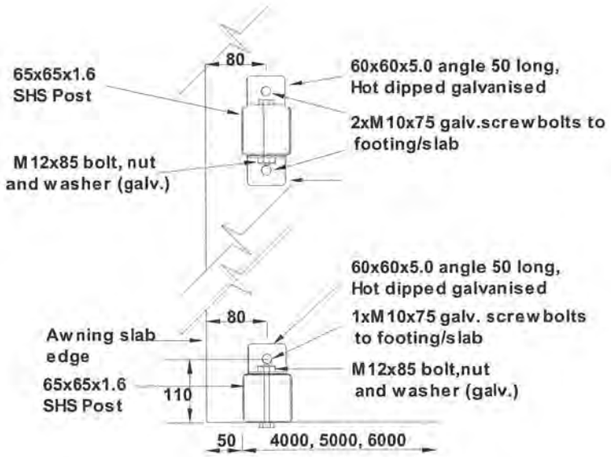

POST HOLD DOWN DETAILS

FREDERICK R SMITH **chartered consulting engineer** 363 Wairakei Rd, Burnside Christchurch 8053 Phone 03 348 1521	I certify that buildings erected in accordance with these drawings will comply with the New Zealand Building Code. F R Smith BE (civil) MIPENZ MACENZ MIEAust CPEng RPEQ (6225)	TOTALSPAN **A Division of VERSATILE BUILDINGS LTD** 112 WATERLOO ROAD, HORNBY P.O. BOX 11-013, CHRISTCHURCH PH: (09) 261 2306 FAX: (09) 262 1535	Drawing Title: **PORTAL BUILDING** **AWNING FOUNDATION DETAILS**	For: Tony Ward Kotare Street Waikanae Kapiti

Date Drawn:	10/02/2010
Main Building Length:	5914mm
Main Building Width:	3964mm
Main Building Area:	23.443m²
Awning Length:	6000mm
Awning Width:	4000mm
Awning Area:	24.000m²
Total Building Length:	5914mm
Total Building Width:	7964mm
Total Building Area:	47.443m²
Stud Height:	2700
Wind Rating:	High (A6-A7)
Bay Size:	3000
Cladding:	7 Rib Profile Colour: TBC
Foundation:	Concrete Slab

Notes:
The design has been checked in accordance with B1/VM1, B1/VM4 and B2 of the approved documents issued by the Department of Building and Housing (DHB) and the work is described on drawings prepared by Frederick R Smith, Chartered Professional Engineer.

Durability requirements for wall cladding detailed in Manufacturers Statement-Durability.

This specification is to be read in conjunction with the attached Totalspan Specification drawings and Producer Statement by Frederick R Smith, Chartered Professional Engineer.

Construction to comply with the New Zealand Building Code.

COPYRIGHT: THESE DRAWINGS MUST NOT BE REPRODUCED WITHOUT THE EXPRESS PERMISSION OF SPANBILD NEW ZEALAND LTD.

TOTALSPAN BUILDINGS
A Division of Spanbild New Zealand Ltd
112 Waterloo Road, Hornby,
P.O.Box 11-013, Christchurch
PH: (09) 261 2306 FAX: (09) 262 1535

PREPARED BY: Kevin Calcott, Wellington-Horowhenua, 04 297 0033
FOR: Tony Ward
REFERENCE: KevinC-1903

SITE ADDRESS: Kotare Street
Waikanae
Kapiti

SPECIFICATIONS

DIMENSIONS IN mm UNLESS OTHERWISE STATED THIS IS A C.A.D. DRAWING AND MUST NOT BE ALTERED BY MANUAL METHODS

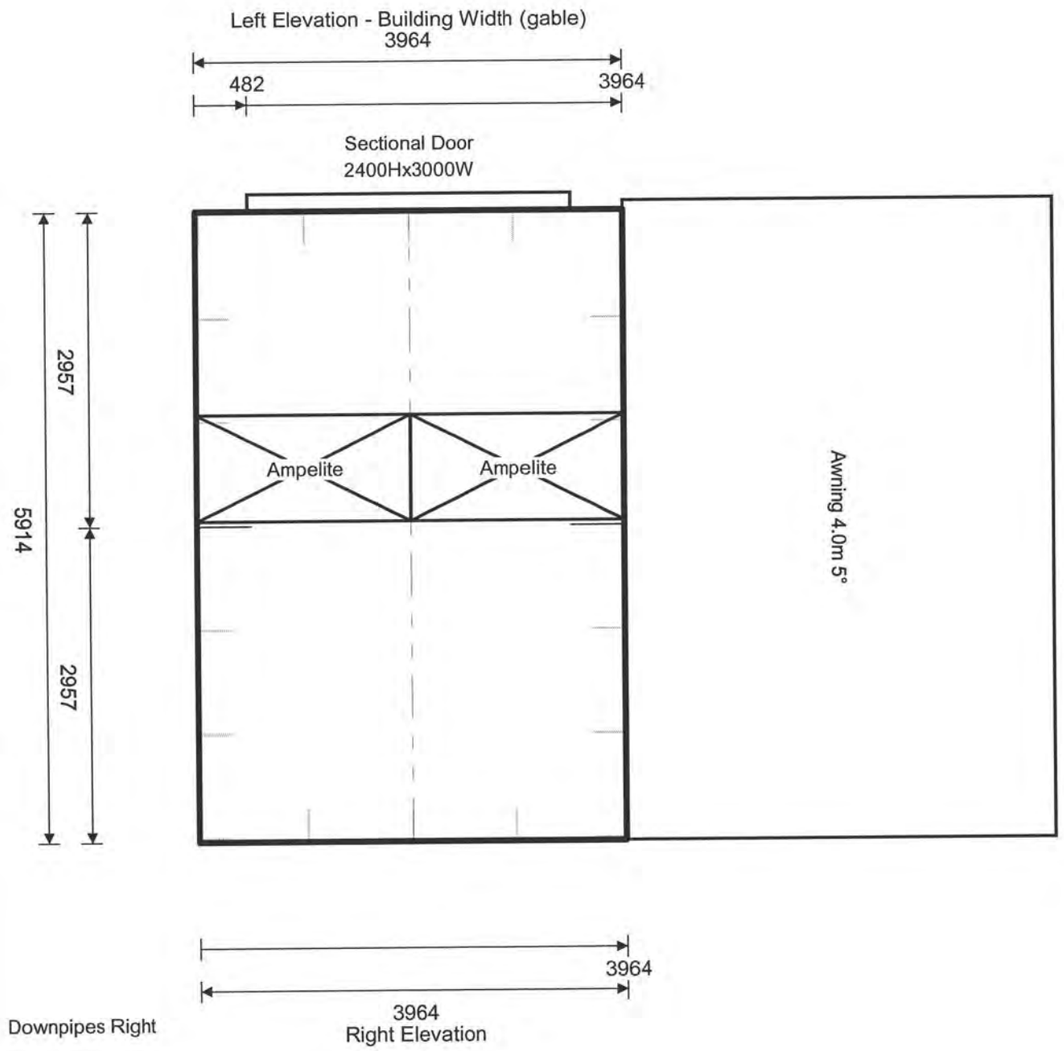

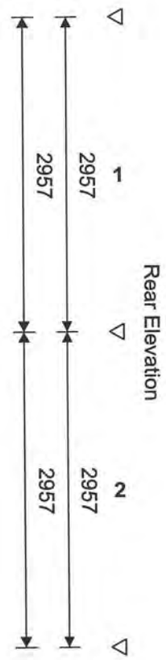

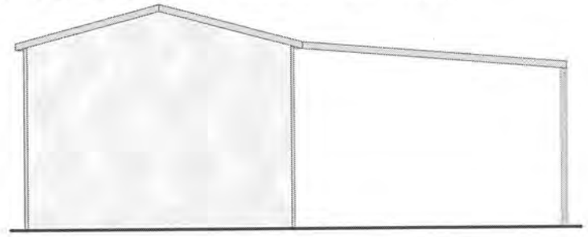

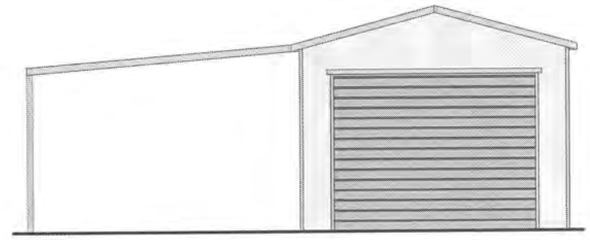

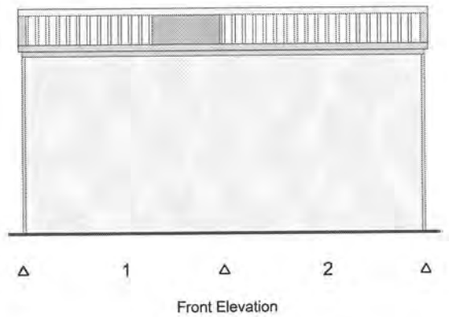

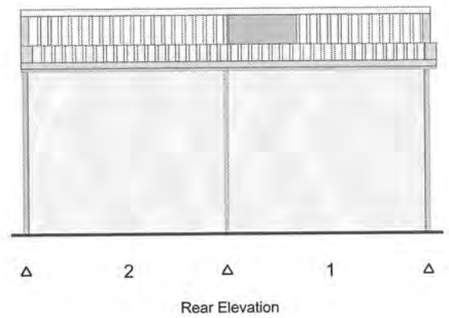

COPYRIGHT: THESE DRAWINGS MUST NOT BE REPRODUCED WITHOUT THE EXPRESS PERMISSION OF SPANBILD NEW ZEALAND LTD.

TOTALSPAN BUILDINGS
A Division of Spanbild New Zealand Ltd
112 Waterloo Road, Hornby,
P.O.Box 11-013, Christchurch
PH: (09) 261 2306 FAX: (09) 262 1535

PREPARED BY: Kevin Calcott, Wellington-Horowhenua, 04 297 0033

FOR: Tony Ward

REFERENCE: KevinC-1903

SITE ADDRESS: Kotare Street
Waikanae
Kapiti

N.T.S

PLAN & ELEVATIONS

Sheet 2 of 7

DIMENSIONS IN mm UNLESS OTHERWISE STATED THIS IS A C.A.D. DRAWING AND MUST NOT BE ALTERED BY MANUAL METHODS

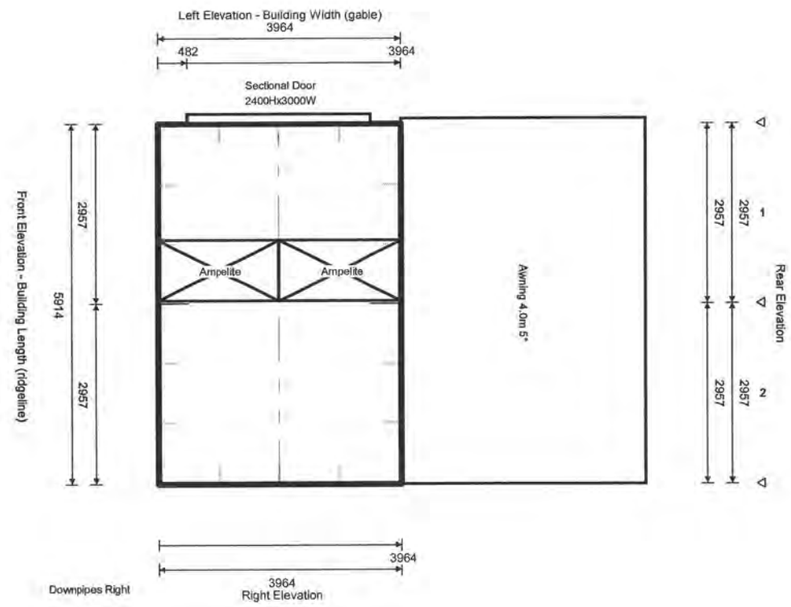

COPYRIGHT: THESE DRAWINGS MUST NOT BE REPRODUCED WITHOUT THE EXPRESS PERMISSION OF SPANBILD NEW ZEALAND LTD.

TOTALSPAN BUILDINGS
A Division of Spanbild New Zealand Ltd

112 Waterloo Road, Hornby,
P.O.Box 11-013, Christchurch
PH: (09) 261 2306 FAX: (09) 262 1535

PREPARED BY: Kevin Calcott, Wellington-Horowhenua, 04 297 0033

FOR: Tony Ward

REFERENCE: KevinC-1903

SITE ADDRESS: Kotare Street
Waikanae
Kapiti

Scale 1 : 100

PLAN

Sheet 3 of 7

DIMENSIONS IN mm UNLESS OTHERWISE STATED THIS IS A C.A.D. DRAWING AND MUST NOT BE ALTERED BY MANUAL METHODS

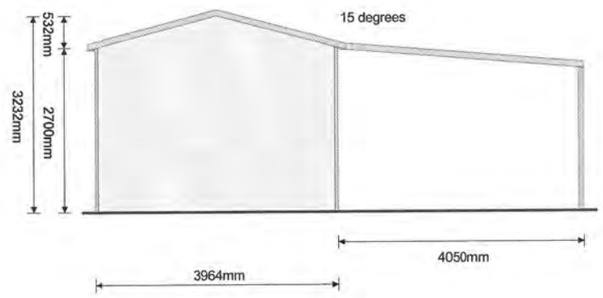

Right Elevation

COPYRIGHT: THESE DRAWINGS MUST NOT BE REPRODUCED WITHOUT THE EXPRESS PERMISSION OF SPANBILD NEW ZEALAND LTD.

TOTALSPAN BUILDINGS
A Division of Spanbild New Zealand Ltd

112 Waterloo Road, Hornby,
P.O.Box 11-013, Christchurch
PH: (09) 261 2306 FAX: (09) 262 1535

PREPARED BY: Kevin Calcott, Wellington-Horowhenua, 04 297 0033

FOR: Tony Ward

REFERENCE: KevinC-1903

SITE ADDRESS: Kotare Street
Waikanae
Kapiti

Scale 1 : 100

RIGHT ELEVATION

Sheet 4 of 7

DIMENSIONS IN mm UNLESS OTHERWISE STATED THIS IS A C.A.D. DRAWING AND MUST NOT BE ALTERED BY MANUAL METHODS

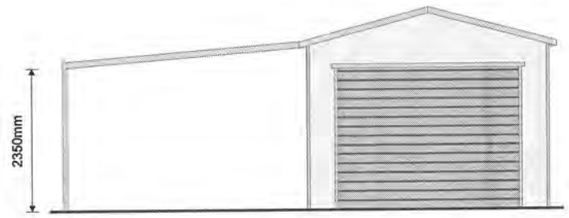

Left Elevation

COPYRIGHT: THESE DRAWINGS MUST NOT BE REPRODUCED WITHOUT THE EXPRESS PERMISSION OF SPANBILD NEW ZEALAND LTD.

TOTALSPAN BUILDINGS
A Division of Spanbild New Zealand Ltd

112 Waterloo Road, Hornby,
P.O.Box 11-013, Christchurch
PH: (09) 261 2306 FAX: (09) 262 1535

PREPARED BY: Kevin Calcott, Wellington-Horowhenua, 04 297 0033

FOR: Tony Ward

REFERENCE: KevinC-1903

SITE ADDRESS: Kotare Street
Waikanae
Kapiti

Scale 1 : 100

LEFT ELEVATION

Sheet 5 of 7

DIMENSIONS IN mm UNLESS OTHERWISE STATED THIS IS A C.A.D. DRAWING AND MUST NOT BE ALTERED BY MANUAL METHODS

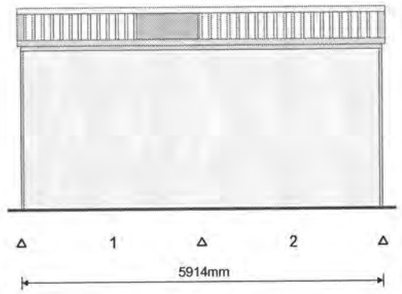

Front Elevation

COPYRIGHT: THESE DRAWINGS MUST NOT BE REPRODUCED WITHOUT THE EXPRESS PERMISSION OF SPANBILD NEW ZEALAND LTD.

TOTALSPAN BUILDINGS
A Division of Spanbild New Zealand Ltd

112 Waterloo Road, Hornby,
P.O.Box 11-013, Christchurch
PH: (09) 261 2306 FAX: (09) 262 1535

PREPARED BY: Kevin Calcott, Wellington-Horowhenua, 04 297 0033

FOR: Tony Ward

REFERENCE: KevinC-1903

SITE ADDRESS: Kotare Street
Waikanae
Kapiti

Scale 1 : 100

FRONT ELEVATION

Sheet 6 of 7

DIMENSIONS IN mm UNLESS OTHERWISE STATED THIS IS A C.A.D. DRAWING AND MUST NOT BE ALTERED BY MANUAL METHODS

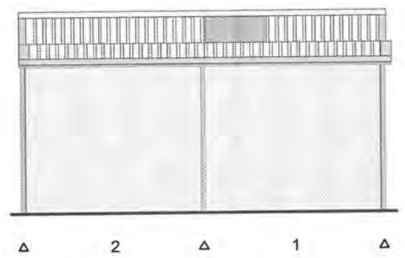

COPYRIGHT: THESE DRAWINGS MUST NOT BE REPRODUCED WITHOUT THE EXPRESS PERMISSION OF SPANBILD NEW ZEALAND LTD.

TOTALSPAN BUILDINGS
A Division of Spanbild New Zealand Ltd

112 Waterloo Road, Hornby,
P.O.Box 11-013, Christchurch
PH: (09) 261 2306 FAX: (09) 262 1535

PREPARED BY: Kevin Calcott, Wellington-Horowhenua, 04 297 0033

FOR: Tony Ward

REFERENCE: KevinC-1903

SITE ADDRESS: Kotare Street
Waikanae
Kapiti

Scale 1 : 100

REAR ELEVATION

Sheet 7 of 7

IPENZ ENGINEERS NEW ZEALAND | NEW ZEALAND INSTITUTE OF ARCHITECTS INCORPORATED | ACENZ

Building Code Clause(s) B1

PRODUCER STATEMENT – PS1 – DESIGN

(Guidance notes on the use of this form are printed on the reverse side)*

ISSUED BY: Frederick R Smith Consulting
(Design Firm)

TO: Tony Ward / Totalspan Buildings
(Owner/Developer)

TO BE SUPPLIED TO: KCDC
(Building Consent Authority)

IN RESPECT OF: Portal Building
(Description of Building Work)

AT: Kotare Street, Waikanae, Kapiti, , / High (A6-A7) - T.C.2 Rural
(Address)

..... **DP** ..... **SO** .....

We have been engaged by the owner/developer referred to above to provide structural design
(Extent of Engagement)
services in respect of the requirements of Clause(s) B1 and B2 of the Building Code for

(●) All or ( ) Part only (as specified in the attachment to this statement), of the proposed building work.

The design carried out by us has been prepared in accordance with:

☑ Compliance Documents issued by Department of Building & Housing B1/VM1, B1/VM4, AS/NZS 1170:2002
(verification method / acceptable solution)
NZS 3101, AS/NZS 4600 or

☐ Alternative solution as per the attached schedule .....

The proposed building work covered by this producer statement is described on the drawings titled Portal Building and numbered 1-14;

together with the specification, and other documents set out in the schedule attached to this statement.

On behalf of the Design Firm, and subject to:

(i) Site verification of the following design assumptions Soil bearing strength to be not less than 75 kPa (Ultimate capacity of 225 kPa to NZS 3604:1999)

(ii) All proprietary products meeting their performance specification requirements;

I **believe on reasonable grounds** the building, if constructed in accordance with the drawings, specifications, and other documents provided or listed in the attached schedule, will comply with the relevant provisions of the Building Code.

I, Frederick R Smith am: ☑ CPEng 34469 #
(Name of Design Professional)
☐ Reg Arch .....#

I am a Member of : ☑ IPENZ ☐ NZIA and hold the following qualifications: BE (Civil)

The Design Firm issuing this statement holds a current policy of Professional Indemnity Insurance no less than $200,000*.
The Design Firm is a member of ACENZ (●) **YES** ( ) **NO**

SIGNED BY Frederick Roland Smith ON BEHALF OF Frederick Smith Consulting Engineers
(Design Firm)

Date 24-06-2010 *(signature)*

Note: This statement shall only be relied upon by the Building Consent Authority named above. Liability under this statement accrues to the Design Firm only. The total maximum amount of damages payable arising from this statement and all other statements provided to the Building Consent Authority in relation to this building work, whether in contract, tort or otherwise (including negligence), is limited to the sum of $200,000.*

This form is to accompany **Form 2 of the Building (Forms) Regulations 2004** for the application of a Building Consent.

THIS FORM AND ITS CONDITIONS ARE COPYRIGHT TO ACENZ, IPENZ AND NZIA

DESIGN PRODUCER STATEMENT – PS1

ISSUED BY:	David Smart Consulting Ltd
TO:	Fergusson Tanks
TO BE SUPPLIED TO:	Building Consent Authority
IN RESPECT OF:	Flat Top 10500 Litre Cement Mortar Water Tank
LOCATION:	Ground Burial

David Smart Consulting Ltd has been engaged by Fergusson Tanks of Feilding to provide structural design services for a design check to assess suitability for ground burial of their standard 10500 litre flat top cement mortar water tanks.

The design check has been undertaken in accordance with verification methods B1/VM1 & B1/VM4 of the approved documents issued by the Department of Building and Housing with additional reference to NZS 3106:1986 'Code of Practise for Concrete Structures for the storage of Liquids' for the tank construction as specified below.

The standard flat top tank construction is detailed to consist of;

- Circular Tank 2.9m in diameter and 2.0m high having a flat top roof with a centre post to provide a water holding capacity of more than 10,000 litres
- Concrete Floor 100mm thick reinforced with 665 mesh centrally placed transitioned into the wall with a 250 mm concrete ring fillet
- 50mm thick cement mortar walls reinforced with 50 mm chain link mesh wire netting and 6 wraps of 4.0 mm dia galvanised wire spirally wound at the bottom changing to 3.15 mm dia wire for the rest of the wall to the top at a 50 mm pitch spacing
- 80mm thick concrete roof reinforced with 665 mesh centrally placed and supported on a 160 mm dia concrete post reinforced with 4 D10 bars.

On behalf of the Design Firm, and subject to;

- all proprietary products meeting performance specifications
- ground burial depth not exceeding 200mm above the tank roof
- no additional ground or floor loading surcharge being placed on the roof
- backfill around the tank being uniformly placed
- no influence of adjacent ground loading surcharge outside the tank from nearby structures or vehicles and the like being placed on the walls
- the tank not being emptied in the presence of a high ground water table to avoid flotation
- Concrete and cement mortar strength exceeding 25 Mpa to NZS 3106:1986 requirements
- Construction being completed in accordance with NZS 3106:1986
- ultimate ground bearing capacity exceeding 200 kPa

I BELIEVE ON REASONABLE GROUNDS that the tank, if constructed as described, will comply with the relevant provisions of the New Zealand Building Code

Signed: ..... Date: 5 November 2010

David L Smart
BE (Civil), MIPENZ

On behalf of David Smart Consulting Ltd (Design Firm)
28 Amesbury St, Palmerston North
with a current policy of Professional Indemnity Insurance no less than $200,000

Note: Liability under this statement accrues to the Design Firm only. The total maximum amount of damages payable arising from this statement and all other statements provided to the Building Consent Authority in relation to this building work, whether in contract, tort or otherwise (including negligence), is limited to the sum of $200,000.

This form to accompany Form 2 of the Building (Forms) Regulations 2004 for the application of a Building Consent

P.I.M. No.....

Building Regulation Clause(s) B1& B2

PRODUCER STATEMENT – PS1 – DESIGN

ISSUED BY: Allan Bruce Pullenger
(Suitably qualified Design Professional)

TO: Mr & Mrs Ward
(Owner)

TO BE SUPPLIED TO: Kapiti Coast District Council
(Territorial Authority)

IN RESPECT OF: Structural Beams, Retaining, pole & concrete walls
(Description of Building Work)

AT: 35b Kotare Street

Waikanae
(Address)

LOT 3 **DP** 64335

Designscape sharkbait ltd *(Design Firm)* has been engaged by owner *(Owner/Developer/Contractor)*

to provide Structural design services in respect of the *(Extent of Engagement)*

requirements of Clause(s) B1, B2 (limited to structural materials) of the Building Regulations 2004 for

☐ All ■ Part only as specified

of the building work. The design has been prepared in accordance with B1 *(verification method(s)/acceptable solutions(s))*

(respectively) of the approved documents issued by the Building Industry Authority and the work is described on

Designscape sharkbait ltd drawings titled **Ward House** and numbered **2690** and the specification and other documents according to which the building is proposed to be constructed.

As an independent design professional covered by a current policy of Professional Indemnity Insurance to a minimum value of $200,000. **I BELIEVE ON REASONABLE GROUNDS** that subject to:

(i) the site verification of the following design assumptions

and (ii) all proprietary products meeting the performance specification requirements, the drawings, specifications, and other documents according to which the building is proposed to be constructed comply with the relevant provisions of the building code.

..... Date 20/06/2011
(Signature suitably qualified Design Professional)

NZCE, Rea
(Professional Qualifications)

IPENZ Reg No **57930**

Member CertETn ■

298 Rosetta Road, Raumati
(Address)

GUIDANCE ON USE OF PRODUCER STATEMENTS

This producer statement has been prepared by a combined task committee consisting of members of the New Zealand Institute of Architects, Institution of Professional Engineers New Zealand, Association of Consulting Engineers New Zealand and the Building Officials Institute of New Zealand.

Four producer statements are available and brief details on the purpose of each are as follows:

Design: Intended for use by the person responsible for the design in circumstances where the Territorial Authority will rely on the producer statement to issue a Building Consent.

Design Review: Intended for use by a suitably qualified independent design professional where the Territorial Authority does not undertake an internal review and relies on the independent design professional's review to issue the Building Consent.

Construction: Intended for the use by the contractor of the building works where the Territorial Authority requires a producer statement at the completion of construction.

Construction Review: Intended for use by the person required by the Building Consent to undertake construction monitoring of the building works in circumstances where the Territorial Authority will rely on the producer statement to issue a Code Compliance Certificate.

The producer statements system is intended to provide Territorial Authorities with reasonable grounds for the issuing of a Building Consent or Code Compliance Certificate without having to duplicate design or construction checking by others.

The following criteria are recommended to Territorial Authorities with respect to the use of the producer statements.

Definition of Suitably Qualified Design Professional

A suitably qualified design professional should have recognised qualifications and experience for the work undertaken and should be either:

(i) an active member of the Association of Consulting Engineers New Zealand (ACENZ) or;
(ii) a member of the Institution of Professional Engineers New Zealand (IPENZ) having a current policy of Professional Indemnity Insurance for a sum not less than $200,000 or;
(iii) a member of the New Zealand Institute of Architects (NZIA) having a current policy of Professional Indemnity Insurance for a sum of not less than $200,000.

Design Build Contracts

If the design professional is engaged by the contractor, the territorial authority should satisfy itself that it is appropriate for the territorial authority to rely upon a producer statement from the design professional.

Consulting Services during Construction Phase

There are several levels of service which a design professional may provide during the construction phase of a project. The territorial authority is encouraged to require that the service to be provided by the design professional is appropriate for the project concerned.

Requirement to provide Producer Statement

Territorial Authorities should ensure that the applicant is aware of any circumstances in which there may be a requirement for producer statements for the construction phase of building work at the time the building consent is issued as no design professional should be expected to provide a producer statement unless such a requirement forms part of the design professional's engagement.

Attached Particulars

Attached particulars referred to in this producer statement refer to supplementary information appended to the producer statement.

Paraparaumu Prenail Ltd.

37 Ihakara St. PARAPARAUMU Ph (04) 902 5618 Fax (04) 902 5619

Date: 24 June 2011

Preliminary Producer Statement - PS1 - Design

Job Ref: 4481

Truss Design Criteria For Building Consent Application

CLIENT Name: ***Tony Ward***

SITE Details: ***Ward House***

Address : 35c Kotare Street

City: Waikanae

Post Code: State:

00024

Nominal Design Criteria:

Building importance: Residential
Roofing: Metal Tile
Ceiling: 13mm Gibboard
Top chord purlins: 380mm
BC restraints: 400mm
Standard truss spacing: 900mm
Standard roof pitch: 30.00 deg.
Ult. design wind speed:50 m/s (wind classification = Very High)

Design roof snow load: 1.5 KPA
(incl. probability factor)
Ground snow load: 0 Pa
Location: Region N1 - lower Nth Island
Altitude above sea level: 100 m

Max. eaves height: 3 m
Max. ridge height: 8 m

Int pressure coeff. up: 0.2
Structural Fascia: Not required except at hip corners

The truss designs for this job have been determined using computer software provided by Pryda New Zealand, using sound and widely accepted engineering principles. In particular, loadings and designs are performed in accordance with the Standards adopted by primary reference in the Compliance Document, B1 Structure, as called up in the New Zealand Building Code, NZBC 2008.

In addition, the following secondary referenced Australian Standard also applies:

AS 1649-2001 Timber - Methods of test for mechanical fasteners and connectors - Basic working loads and characteristic strengths

All trusses are to be manufactured in accordance with the fabrication specifications provided by Pryda, and installed, connected and braced in accordance with the recommendations given in - : AS4440:2004 "Installation of nailplated timber roof trusses" and any other supplementary details that may be provided.

All truss designs and their connections have been designed using Pryda design software. Additional items such as roof/ceiling plane bracing, special notes, supplementary timber, etc., which may be shown on the plan drawings are the responsibility of others.

I/we confirm that the trusses for this project have been manufactured in accordance with the fabrication specifications provided by Pryda New Zealand

Name: **Bruce Dyhrberg** Position: **Head Detailer**

Signed: *B. Dyhrberg* Date: **Friday, 24 June 2011**

Paraparaumu Prenail Ltd.
37 Ihakara St. PARAPARAUMU Ph (04) 902 5618 Fax (04) 902 5619

Date: 24-06-2011
Pryda Build V 2.0.8.79

Producer Statement - PS1 - Design

Job Ref: **4481D**

This producer statement applies to the structural engineering design software "Pryda Build" supplied by Pryda NZ to

Paraparaumu Prenail Ltd.

who is licensed to use the software to produce nailplated timber roof truss, floor truss, lintel and beam designs. These truss designs are in accordance with sound and widely accepted engineering principles and comply with the Compliance Document for the New Zealand Building Code, Clause B1, and New Zealand Building Code Verification Method B1/VM1.

In addition to the above, this software also complies in part with:

ANSI / TPI 1 - 2002 National Design Standard for metal plate connected wood truss construction.

AS 1649 - 2001 Timber - Methods of test for mechanical fasteners and connectors - Basic working loads and characteristic strengths.

The truss designs require that the supporting structure is stable in its own right, and that the trusses will be braced in accordance with the New Zealand Building Code Standard NZS3604:1999 and amendments 1 & 2, and any supplementary documentation provided by Pryda NZ.

Pryda NZ holds a current policy of Professional Indemnity Insurance with cover no less than NZ$2 million. The policy includes the engineering design processes used in the software.

On behalf of Pryda NZ (a division of ITW New Zealand)

A C van Blerk BSc (Eng) MIPENZ (214689) CPEnd IntPE
Engineering Services Manager

IPENZ ARCHITECTS ACENZ

Building Code Clause(s) .....

PRODUCER STATEMENT – PS1 – DESIGN

(Guidance notes on the use of this form are printed on the reverse side)

ISSUED BY: BUMI RESOURCES LTD
(Design Firm)

TO: LARSENS CONCRETE & DRAINAGE
(Owner/Developer)

TO BE SUPPLIED TO: .....
(Building Consent Authority)

IN RESPECT OF: LARSENS ELE 10000 LITRE WATER TANK
(Description of Building Work)

AT: .....
(Address)

..... LOT ..... DP ..... SO .....

We have been engaged by the owner/developer referred to above to provide STRUCTURAL DESIGN TO REINFORCED CONCRETE TANK services in respect of the requirements of
(Extent of Engagement)
Clause(s) 6-7 of AS/NZS 1546.1 : 1998 of the Building Code for
(Number)
~~☐ All or ☐ Part only (as specified in the attachment to this statement), of the proposed building work.~~

The design carried out by us has been prepared in accordance with:

☐ Compliance Documents issued by Department of Building & Housing .....
(verification method / acceptable solution)
..... or

☐ Alternative solution as per the attached schedule .....

The proposed building work covered by this producer statement is described on the drawings titled.....
..... and numbered .....;
together with the specification, and other documents set out in the schedule attached to this statement.

On behalf of the Design Firm, and subject to:

(i) Site verification of the following design assumptions .....

(ii) All proprietary products meeting their performance specification requirements;

I believe on reasonable grounds the building, if constructed in accordance with the drawings, specifications, and other documents provided or listed in the attached schedule, will comply with the relevant provisions of the Building Code.

I, DAVID MULHOLLAND ..... am: ☐ CPEng ..... #
(Name of Design Professional)
☐ Reg Arch ..... #

I am a Member of: ☑ IPENZ ☐ NZIA and hold the following qualifications: .....

The Design Firm issuing this statement holds a current policy of Professional Indemnity Insurance no less than $200,000*.
The Design Firm is a member of ACENZ ○ YES ○ NO

SIGNED BY ..... ON BEHALF OF BUMI RESOURCES LTD
(Design Firm)

Date 15/2/2010 (signature) DAVID MULHOLLAND

Note: This statement shall only be relied upon by the Building Consent Authority named above. Liability under this statement accrues to the Design Firm only. The total maximum amount of damages payable arising from this statement and all other statements provided to the Building Consent Authority in relation to this building work, whether in contract, tort or otherwise (including negligence), is limited to the sum of $200,000.*

This form is to accompany Form 2 of the Building (Forms) Regulations 2004 for the application of a Building Consent.

THIS FORM AND ITS CONDITIONS ARE COPYRIGHT TO ACENZ, IPENZ AND NZIA

ENGINEERS NEW ZEALAND ARCHITECTS ACENZ

Building Code Clause(s) B1

PRODUCER STATEMENT – PS1 – DESIGN

(Guidance notes on the use of this form are printed on the reverse side)*

ISSUED BY: GHD LTD
(Design Firm)

TO: AZZURO Solar System
(Owner/Developer)

TO BE SUPPLIED TO: Local Councils
(Building Consent Authority)

IN RESPECT OF: Structural design of angle bracket (only)to support solar panel
(Description of Building Work)

AT: Different locations
(Address)

..... **LOT** ..... **DP** ..... **SO** .....

We have been engaged by the owner/developer referred to above to provide Structural design of angle bracket to supp solar panel (excluding other supporting elements ie roof members ,walls,etc)....services in respect of the requirements of
(Extent of Engagement)
Clause(s) B1 ..... of the Building Code for
○ All or ◉ Part only (as specified in the attachment to this statement), of the proposed building work.

The design carried out by us has been prepared in accordance with:

☑ Compliance Documents issued by Department of Building & Housing B1
(verification method / acceptable solution)
..... or

☐ Alternative solution as per the attached schedule .....

The proposed building work covered by this producer statement is described on the drawings titled Detail and specification solar water heating only ..... and numbered AZZ RK-STD20 stamped singed by GHD LTD .....;
together with the specification, and other documents set out in the schedule attached to this statement.

On behalf of the Design Firm, and subject to:

(i) Site verification of the following design assumptions roof elements supporting the panels are adequate &to be
(ii) All proprietary products meeting their performance specification requirements; checked by engineer

I **believe on reasonable grounds** the building, if constructed in accordance with the drawings, specifications, and other documents provided or listed in the attached schedule, will comply with the relevant provisions of the Building Code.

I, Hamid Rahmanian .....am: ☑ CPEng 250574 .....#
(Name of Design Professional)
☐ Reg Arch ..... #

I am a Member of : ☑ IPENZ ☐ NZIA and hold the following qualifications: .....

The Design Firm issuing this statement holds a current policy of Professional Indemnity Insurance no less than $200,000*.
The Design Firm is a member of ACENZ ◉ **YES** ○ **NO**

SIGNED BY Hamid Rahmanian ..... ON BEHALF OF GHD LTD .....
(Design Firm)

Date 07/03/11 ..... *(signature)* .....

Note: This statement shall only be relied upon by the Building Consent Authority named above. Liability under this statement accrues to the Design Firm only. The total maximum amount of damages payable arising from this statement and all other statements provided to the Building Consent Authority in relation to this building work, whether in contract, tort or otherwise (including negligence), is limited to the sum of $200,000.*

This form is to accompany **Form 2 of the Building (Forms) Regulations 2004** for the application of a Building Consent.

THIS FORM AND ITS CONDITIONS ARE COPYRIGHT TO ACENZ, IPENZ AND NZIA

GUIDANCE ON USE OF PRODUCER STATEMENTS

Producer statements were first introduced with the Building Act 1992. The producer statements were developed by a combined task committee consisting of members of the New Zealand Institute of Architects, Institution of Professional Engineers New Zealand, Association of Consulting Engineers New Zealand in consultation with the Building Officials Institute of New Zealand. The original suite of producer statements has been revised at the date of this form as a result of enactment of the Building Act (2004) by these organisations to ensure standard use within the industry.

The producer statement system is intended to provide Building Consent Authorities (BCAs) with reasonable grounds for the issue of a Building Consent or a Code Compliance Certificate, without having to duplicate design or construction checking undertaken by others.

PS1 Design	Intended for use by a suitably qualified independent design professional in circumstances where the BCA accepts a producer statement for establishing reasonable grounds to issue a Building Consent;
PS2 Design Review	Intended for use by a suitably qualified independent design professional where the BCA accepts an independent design professional's review as the basis for establishing reasonable grounds to issue a Building Consent;
PS3 Construction	Forms commonly used as a certificate of completion of building work are Schedule 6 of NZS 3910:2003[1] or Schedules E1/E2 of NZIA's SCC 2007 [2]
PS4 Construction Review	Intended for use by a suitably qualified independent design professional who undertakes construction monitoring of the building works where the BCA requests a producer statement prior to issuing a Code Compliance Certificate. This must be accompanied by a statement of completion of building work (Schedule 6).

The following guidelines are provided by ACENZ, IPENZ and NZIA to interpret the Producer Statement.

Competence of Design Professional

This statement is made by a Design Firm that has undertaken a contract of services for the services named, and is signed by a person authorised by that firm to verify the processes within the firm and competence of its designers.

A competent design professional will have a professional qualification and proven current competence through registration on a national competence-based register, either as a Chartered Professional Engineer (CPEng) or a Registered Architect.

Membership of a professional body, such as the Institution of Professional Engineers New Zealand (IPENZ)or the New Zealand Institute of Architects (NZIA), provides additional assurance of the designer's standing within the profession. If the design firm is a member of the Association of Consulting Engineers New Zealand (ACENZ), this provides additional assurance about the standing of the firm.

Persons or firms meeting these criteria satisfy the term "suitably qualified independent design professional".

*** Professional Indemnity Insurance**

As part of membership requirements, ACENZ requires all member firms to hold Professional Indemnity Insurance to a minimum level.

The PI insurance minimum stated on the front of this form reflects standard, small projects. If the parties deem this inappropriate for large projects the minimum may be up to $500,000.

Professional Services during Construction Phase

There are several levels of service which a Design Firm may provide during the construction phase of a project (CM1-CM5)[3] (OL1-OL4)[2]. The Building Consent Authority is encouraged to require that the service to be provided by the Design Firm is appropriate for the project concerned.

Requirement to provide Producer Statement PS4

Building Consent Authorities should ensure that the applicant is aware of any requirement for producer statements for the construction phase of building work at the time the building consent is issued as no design professional should be expected to provide a producer statement unless such a requirement forms part of the Design Firm's engagement.

Attached Particulars

Attached particulars referred to in this producer statement refer to supplementary information appended to the producer statement.

Refer Also:

1 *Conditions of Contract for Building & Civil Engineering Construction NZS 3910: 2003*

2 *NZIA Standard Conditions of Contract SCC 2007 (1st edition)*

3 *Guideline on the Briefing & Engagement for Consulting Engineering Services (ACENZ/IPENZ 2004)*

www.acenz.org.nz
www.ipenz.org.nz
www.nzia.co.nz

THIS FORM AND ITS CONDITIONS ARE COPYRIGHT TO ACENZ, IPENZ AND NZIA

APPLICATOR'S PRODUCER STATEMENT

I/~~We~~ MIKE COOKSLEY TILING.

Of 36 FREEMANS ROAD OTAKI (Address)

Being an Applicator

Confirm that we have applied HYDRATHANE (Product)

At 35 B KOTERE STREET WAIKANAE

Completed 9/4/2012 for MR & MRS WARD.

in accordance with the manufacturers written application instructions, AS3740-2004 and clauses E2, E3 and B2 of the current NZ Building Code.

I/~~We~~ are satisfied that the substrate over which this system has been applied has been suitably prepared, and the materials have been correctly installed, including 50mm wide Bond Breaking Tape or Neutral-Cure Silicone , Reinforcing Tape 140mm minimum and Reinforcing Matting 970mm as required.

This work has been certified by MIKE COOKSLEY TILING & KCDC INSPECTION

Signed MI Cooksley Date 9/4/2012.

Manufacturer's 15 year Guarantee

- ***Construction Chemicals manufactures products throughout Australia, Asia and New Zealand and has over 30 years of manufacturing experience.***

- ***We maintain a Research and development laboratory that maintains and develops leading edge technology.***

- ***We guarantee our tile adhesives and grout; Waterproof membranes are guaranteed when applied by an Accredited Applicator.***

"When tiles are installed in accordance with AS 3958 Part 1- guide to the installation of ceramic tiles, and waterproofing is installed in accordance with AS 3740 –2004, Waterproofing of wet areas within residential areas, in conjunction with our written instructions, good trade practise and any relevant local requirement, Construction Chemicals guarantees the performance of the products mentioned on the guarantee when applied to structurally sound surfaces"

This guarantee is for a fifteen (15) year period from the time of the original installation and covers only the cost of materials and labour of the original installation when the product is proven and acknowledged to be faulty.

CONSTRUCTION CHEMICALS

Adelaide, Brisbane
Melbourne, Sydney, Perth
Auckland & Kuala Lumpur

Dribond

Construction Chemicals (NZ) Ltd 16 Carpenter Road East Tamaki Auckland	Signed on behalf of Construction Chemicals (NZ) Ltd *S. Plester* Steve Plester NZ Representative (Adhesives)

Dribond

WATERPROOFING & REPAIR PRODUCTS
FOR CONCRETE AND MASONRY

NZ669

Certificate of Proficiency

For the Installation of

Waterproofing

This certificate is to confirm that

On 24th July 2007

Michael Cooksley

Has been instructed by Construction Chemicals (NZ) Ltd in the application of our waterproofing membranes and is hereby classed as an approved applicator.

All waterproofing must be installed according to A.S.3740-2004 Construction Chemicals written instructions and good trade practices and any relevant local requirements under Sections B2, E2 and E3 of the NZBC

Steve Plester

Authorized by *Steve Plester* *Technical Manager*

CONSTRUCTION CHEMICALS

Adelaide
467-469 South Road, Regency Park.
Brisbane, Melbourne, Sydney, Perth, Auckland, Kuala Lumpur

P & J Plastering Contractors Ltd

Joe Tousoon
P O Box 312
Waikanae
Kapiti Coast
p: 04 293 1466
f: 04 293 1471
m: 021 548 536
pandjplastering@inspire.net.nz

LICENSED PLASTERER WARRANTY

Job Number :	27812
Site Address :	35 Kotare Street, , Waikanae
Consent No :	
Building Owner :	Tony Ward
Builder :	Cox & Sweetman
Licensed Plasterer :	P & J Plastering Contractors Ltd
Systems Used :	EPS Cavity Plus Render System,
Substrates Used :	50mm EPS,
Textures Used :	Santa Fe (Painted),
Colours Used :	1/2 Truffle (R)
Start Date :	10-Feb-2012
End Date :	10-Apr-2012
Clauses and Further Information :	

The Licensed Plasterer warrants that defects in the work carried out by the Licensed Plasterer arising within five years of the Completion Date recorded above and caused by faulty workmanship in the application of the Rockcote Resene Products ("RRP") or as a result of RRP being applied other than in accordance with the manufacturer's or supplier's specifications will be made good by the Licensed Plasterer and without cost to the Purchaser.

- The warranty will only apply if the Purchaser has made full payment for the supply and application of the RRP and thereafter will extend to subsequent owners of the property.
- The warranty will only apply where the defect is a direct result of faulty workmanship in the application of the RRP.
- The liability of the licensed plasterer is limited to remedying the defect in the workmanship and the licensed plasterer will not by virtue of this warranty be liable for any other damage, loss, liability, expense or any other loss of any kind whatsoever.
- The warranty will not apply to any repair or maintenance work if any such repair or maintenance work is done other than under the supervision of and subject to the inspection and approval of the Licensed Plasterer or Rockcote Resene Limited.
- Any remedial work carried out under this warranty will not extend the term of this warranty.

P&J PLASTERING
CONTRACTORS LTD
PO BOX 312
WAIKANAE

Signed by P & J Plastering Contractors Ltd

ROCKCOTE
reduce
reuse

License Number
BP111734

ROCKCOTE

advanced construction

MANUFACTURERS GUARANTEE

Job Number :	27812
Site Address :	35 Kotare Street, , Waikanae
Consent No :	
Building Owner :	Tony Ward
Builder :	Cox & Sweetman
Licensed Plasterer :	P & J Plastering Contractors Ltd
Systems Used :	EPS Cavity Plus Render System,
Substrates Used :	50mm EPS,
Textures Used :	Santa Fe (Painted),
Colours Used :	1/2 Truffle (R)
Start Date :	10-Feb-2012
End Date :	10-Apr-2012
Clauses and Further Information :	

Guarantee Periods :
EPS Cavity Plus Render System : - This system has a 15 Year Manufacturers Guarantee for product as per conditions below.

The Manufacturer, Rockcote Resene Limited (herein after called "the Manufacturer") hereby guarantees:-

This guarantee is limited to necessary repairs arising from defects in the manufacture of any products manufactured by the manufacturer, affixed and applied in accordance with all specifications, installation directions, procedures and instructions established by the Manufacturer but does not include damage to or deterioration of the products caused by factors beyond the control of the Manufacturer. For example, but without limiting the foregoing factors damage or defects could be caused by:-

- Faulty Workmanship and/or materials by others.
- Damage caused by acts of God, for example earthquakes, flood, wind or storm damage.
- Damage caused by fire or unlawful acts.
- Damage caused by accidental or intentional impact.
- Damage caused by localised ground movement, including slips and subsidence.
- The manufacturer will not by virtue of this warranty be liable for any consequential, indirect or special damage or loss of any kind whatsoever.

NOTE:

- The manufacturer accepts no Liability for damage caused to other surfaces products or property through water leakage or water penetration which occurs because of improper fixing of doors, windows or door and window flashings.
- This Guarantee extends to product only and does not include the making of any refunds or payments by the manufacturer.
- Please refer to Rockcote specifications which are to be read in conjunction with this Guarantee.
- This Guarantee shall meet the requirements of the current E2 including proposed changes to E2 AS1 & B2 Durability which complies with the New Zealand Building Code Performance B2.3
- The Guarantee is subject to maintenance requirements, if Vector 5 has been applied to balustrades/parapet area's, these areas are to be cleaned and maintained annually, over coated with Resene X-200 after the first two years and subsequentially every five years there after .
- No liability is assumed or implied for project supervision or defects caused by improper installation of the system.

This Product is for application by Licensed Plasterers only. Product only applied in non-conformance with the product data sheet and installation manual or to non approved substrates will invalidate Rockcote's Guarantee.

Signed By Manufacturer.
Mike Olds
General Manager

P & J Plastering Contractors Ltd

Joe Tousoon
P O Box 312
Waikanae
Kapiti Coast
p: 04 293 1466
f: 04 293 1471
m: 021 548 536
pandjplastering@inspire.net.nz

PRODUCER / CONSTRUCTION STATEMENT
EXTERNAL CLADDING

Job Number :	27812
Site Address :	35 Kotare Street, , Waikanae
Consent No :	
Building Owner :	Tony Ward
Builder :	Cox & Sweetman
Licensed Plasterer :	P & J Plastering Contractors Ltd
Systems Used :	EPS Cavity Plus Render System,
Substrates Used :	50mm EPS,
Textures Used :	Santa Fe (Painted),
Colours Used :	1/2 Truffle (R)
Start Date :	10-Feb-2012
End Date :	10-Apr-2012
Clauses and Further Information :	

We the above firm have completed the above work in accordance with NZBC E2/AS1, B2/AS1 , BRANZ Appraisal 476 and the Rockcote Resene Limited Specifications.

P&J PLASTERING
CONTRACTORS LTD
PO BOX 312
WAIKANAE

Signed by P & J Plastering Contractors Ltd
Date: 30/05/2012

ROCKCOTE
reduce
reuse

License Number
BP111734

nulook

Certificate No: 095

Date: 20.3.12

PRODUCER STATEMENT CERTIFICATE

Client: TONY WARD

Address: 35c KOTARE STREET
WAIKANAE

Site Legal Description: LOT 1: 35B KOTARE ST, WAIKANAE

Local Authority: KAPITI COAST DISTRICT COUNCIL Permit No.: 110397

W.A.N.Z. Registration No.: 06476

Confirm that all products supplied by this company as described in our Quotation

No.: 12613 Dated: 27.10.11 Revision Dated: 12.1.12

Supplied Only ☑ Supplied & Installed ☐ Unglazed ☑ Glazed ☑

Comply with the following current New Zealand Standard Specification:

Performance of Windows NZS 4211 S.W.P.: VH

Water Leakage Grade: 330 Air Infiltration Grade: 8

Aluminium Joinery NZS 3504 ☑

Glass & Glazing NZS 4223 ☑

B.I.A. "Safety from Falling" Clause F4 ☑

W.A.N.Z. Installation Code of Practice ☑

Other Specified Documents:

Signed:

CLIENTS COPY

nulook
windows & doors

Warranty for Nulook Aluminium

The organisations involved in the manufacture of your Nulook aluminium joinery warrant the product they have supplied and their workmanship.

Fabricator Warranty:

The joinery supplier who has supplied you with Nulook aluminium joinery (the "Fabricator") will, subject, to the conditions below, at its option, repair or replace free of charge any Nulook aluminium joinery due to a failure in workmanship or installation carried out by the Fabricator within a period of five years from the date of delivery or installation by the Fabricator.

The Fabricator shall not be liable for any defect in materials covered by any other supplier warranty. This Warranty does not affect any applicable statutory consumer rights.

Nalco Extrusion Warranty:

National Aluminium Limited ("NALCO") has supplied the Fabricator with aluminium and will, subject to the conditions below, at its option, repair or replace free of charge any Nulook aluminium extrusion supplied by NALCO where it:

- Fails to remain waterproof
- Fails to be durable as defined by the New Zealand Building Code Requirement: Fifteen Years
- Fails to comply with the performance requirements of NZS4211: Specification for windows: within a period of TWO Years from the date of manufacture.

NALCO shall not be liable for any defect in workmanship, fabrication installation or failure of powdercoating paint finish covered by the Powdercoating Warranty or any defect in hardware not manufactured by NALCO.

This warranty does not affect any applicable statutory consumer rights.

Conditions of the Fabricator and NALCO Warranty ("the Warrantee"):

- The Warranties are only applicable to windows and doors fitted to domestic dwellings.
- The Warranties do not apply in the event of:
  - **a)** Any damage or deterioration arising from causes beyond the control of Nalco or the Fabricator including but not limited to impact, abrasion, earthquake, flood, mechanical damage, neglect, malicious damage, misuse, fire damage, act of God, pollution, abnormal weather, damage caused by geothermal gases, air pollution or severe coastal conditions, excessive heat, exposure to chemicals, or attempted repairs unauthorised by NALCO or the Fabricator.
  - **b)** Where the defect is caused by the use of adhesive tapes or by the use or failure of sealants or mastics.
  - **c)** Where the defect is caused by a failure to regularly maintain the surfaces in accordance with the recommended care and maintenance procedures as set out in the Powdercoat Warranty.
  - **d)** Where the defect is attributable to a defect in the structure to which the joinery has been affixed.

- The obligations under this Warranty are limited to either free replacement of the defective component or repair at the discretion of NALCO or the Fabricator, as the case may be.
- Neither NALCO nor the Fabricator is liable for any additional direct or indirect special consequential or third party claims for loss, damage or expenses.
- The Warranties are not assignable or transferable to subsequent owners without the prior written consent of both NALCO and the Fabricator.
- The liability of NALCO and the Fabricator shall not exceed the original invoice value of the applicable aluminium joinery product at fault.
- No liability shall arise where the purchase price for any product supplied remains unpaid in full, or where payment is not made on the due date for payment.
- No liability shall arise unless a claim is made in writing to the Fabricator or to NALCO within 30 days of the defect arising or being reasonably discoverable by the purchaser.

Nulook Windows and Doors is a registered trademark of National Aluminium Ltd (NALCO)
42 Lady Ruby Drive East Tamaki Auckland Ph: 64 9 272 1700, Fax 64 9 272 1708, Website www.nulook.co.nz

Metrotile
ROOFING SYSTEMS

Date: 16 December 2011 Warranty No: 100389.01 Distributor: O Ten M Ltd

TEXTURED STONE-COATED TILE WARRANTY FOR NEW ZEALAND USE ONLY

(Manufactured from Zincalume only)

To the Purchaser Named Hereunder: Cox and Sweetman Builders Ltd

Address: 35B Kotare Street, Waikanae

Tile warranty by Metrotile (NZ) Limited (hereinafter called the Company).

(a) Weather Security Warranty

The Company warrants that each Zincalume roofing tile comprised in the roof fitted to the purchaser's property described below; will carry a 50 year pro-rata weatherproof warranty. This warranty is a full 25-year weatherproof warranty plus a diminishing pro-rata weatherproof warranty for the subsequent 25 years. Should any tile not remain weatherproof over this period the Company may at its option repair or replace the tile. The Company's obligation under this section of the warranty shall be limited to the cost of the remedial work during the first 25 years following the date of this warranty, and thereafter shall be limited to sharing the costs with the purchaser based on the schedule on the reverse of this warranty.

(b) Surface Coating Warranty

If during a period of 20 years from the date of this warranty, the surface coatings of the tile deteriorates to the extent that in the Company's reasonable opinion the appearance of the roof is substantially affected, then the Company will at its option either repair the roof or apply the Company's surface coating to the roof. The Company's obligation under this surface warranty shall be limited to the cost of the remedial work during the first ten years following the date of this warranty, and thereafter shall be limited to the sharing of costs with the purchaser based on the schedule on the reverse side of this warranty.

(c) Installation Warranty by the Installation Contractor

The installation contractor warrants that defects in the purchaser's roof arising within five years of the date of this warranty and caused by faulty workmanship in the fitting of the roof shall, within a reasonable time, be made good by the installation contractor and without cost to the purchaser.

(d) Terms and Conditions of the Tile and Installation Warranties:

(i) The warranties shall only apply if the purchaser has made full payments for the supply and fitting of the roof and thereafter will extend to subsequent owners of the property.

(ii) The warranties shall only apply where the defect is a direct result of a manufacturing defect or faulty workmanship in fitting of the roof. (For example, damage caused by walking on the roof by the owner or any other persons such as plumbers, TV repairmen, electricians, painters etc. following the correct fitting of the roof, or any defects in the structure on which the roof is fitted, is not covered by the warranty.)

(iii) The Company by virtue of these warranties shall not be liable for any consequential, indirect or special damage or loss of any kind whatsoever beyond the period that the Company is liable to the consumer under the Consumer Guarantees Act 1993.

(iv) As colour variations may exist in tiles manufactured at different times the Company and installation contractor reserve the right to repair or replace tiles in a colour similar to the original.

(v) The warranties shall not apply if any work, except temporary emergency work, is done other than under the supervision of or subject to the inspection and approval of the Company.

(vi) The Company gives no warranty if during installation of the roof, skill saws, abrasive discs or hacksaws are used to cut tiles except as directed in fixing instructions issued by the manufacturer of the tiles.

(vii) The surface coating warranty shall not apply where the growth of organic matter such as moss or lichen occurs on the roof. Organic matter, if left unchecked, may damage the surface of any roofing or cladding product.

(viii) Any remedial work carried out under this warranty shall not extend the term of warranty.

(ix) This warranty does not in any way limit the rights of the consumer or limit the obligations of the Company under the Consumer Guarantees Act 1993

(e) Special Note:

If rainwater is to be collected from this roof and intended for drinking, the system must be disconnected for three good rainfalls or thoroughly hosed down before reconnecting.

How to care for your roof:

1. You should not walk on your roof unless absolutely necessary. If you do need to walk on your roof, to avoid denting or causing other damage to your roof, you should, firstly wear soft-soled shoes and secondly place your feet on the lowest point of the tile at the front edge.
2. Metrotile roofs must be washed down regularly with fresh water especially those areas sheltered by the eaves overhang of a higher roof. In areas near the sea, where salt deposits are noticeable on windows and similar surfaces, or near areas of industrial pollution, washing down should be carried out every 2-3 months. In other areas, washing down every 6 months should suffice.
3. All organic growth such as moss, mould, algae, lichen or other organic growth can damage the surface coating of your Metrotile roof and must be removed with chemical cleaners as recommended by Metrotile in order for your warranty to be valid – refer to section (d) (vii). Metrotile recommends to chemically clean the roof within a 3 year time period of your roof being installed and thereafter once every 2-3 years to maintain a good appearance and prevent the growth of moss, mould, algae, lichen or other organic growth. Metrotile recommends the use of MossBoss to chemically clean your roof.

Clause (a) **Weather Security Pro Rata Warranty Schedule**

Year	Company Contribution	%	Purchaser (Owner) Contribution	%
1 to 26	"	100%	"	0%
27	"	96%	"	4%
28	"	92%	"	8%
29	"	88%	"	12%
30	"	84%	"	16%
31	"	80%	"	20%
32	"	76%	"	24%
33	"	72%	"	28%
34	"	68%	"	32%
35	"	64%	"	36%
36	"	60%	"	40%
37	"	56%	"	44%
38	"	52%	"	48%
39	"	48%	"	52%
40	"	44%	"	56%
41	"	40%	"	60%
42	"	36%	"	64%
43	"	32%	"	68%
44	"	28%	"	72%
45	"	24%	"	76%
46	"	20%	"	80%
47	"	16%	"	84%
48	"	12%	"	88%
49	"	8%	"	92%
50	"	4%	"	96%
51 - thereafter	"	0%	"	100%

Clause (b) **Textured Surface Coating Pro Rata Warranty Schedule**

Year	Company Contribution	%	Purchaser (Owner) Contribution	%
1 to 10	"	100%	"	0%
11	"	50.0%	"	50.0%
12	"	45.0%	"	55.0%
13	"	40.0%	"	60.0%
14	"	35.0%	"	65.0%
15	"	30.0%	"	70.0%
16	"	25.0%	"	75.0%
17	"	20.0%	"	80.0%
18	"	15.0%	"	85.0%
19	"	10.0%	"	90.0%
20	"	5.0%	"	95.0%
21 - thereafter	"	0%		100%

Paraparaumu Prenail Ltd.
37 Ihakara St. PARAPARAUMU Ph (04) 902 5618 Fax (04) 902 5619

Date: 09-11-2011
Pryda Build V 3.0.3.169

Fabricator / Designer Statement

Job Ref: **4481A**

This statement may be used by the Building Consent Authority for compliance purposes and is issued by a licensed truss fabricator using the Pryda Build software.

CLIENT Name: *Ward Residence*

SITE Details:

Address : *35 Kotere Street*
Waikanae

City:

Post Code:

Nominal Design Criteria:

Design working life: 50 years
Building importance: Residential
Roofing: Corrugated iron (8.0 kg/sq.m)
Ceiling: 10mm Gib-board (6.8 kg/sq.m)
Top chord purlins: 900 mm

BC restraints: 600 mm
Standard truss spacing: 900 mm
Standard roof pitch: 30.00 deg.
Ult. design wind speed: 50 m/s (wind classification = Very high)

Max. eaves height: 3 m
Max. ridge height: 8 m

Int pressure coeff. up: 0.2
Overhang Condition: Metal fascia

Design roof snow load: 0 Pa
(incl. probability factor)
Ground snow load: 0 Pa
Location: Region N1 - lower Nth Island
Altitude above sea level: 100 m

The correctness of the Design Criteria used by the Pryda Build truss design software is the responsibility of the fabricator.

Note : A structural fascia beam is required at all hip and dutch hip corners to support the short creeper/rafter overhangs, as shown in AS4440-2004

Note: The external wind pressure coefficients for the standard trusses in this job have allowed for proximity to a gable end.

Note: Some trusses in this job support roofing and ceiling materials that are different to this nominal data (see individual truss detail sheets).

All truss designs and their connections have been designed using Pryda design software. Additional items such as roof/ceiling plane bracing, special notes, supplementary timber, etc., which may be shown on the plan drawings are the responsibility of others.

All trusses shall be manufactured in accordance with the fabrication specifications provided by Pryda, and installed, connected and braced in accordance with the recommendations given in - : AS4440:2004 "Installation of nailplated timber roof trusses" and any other supplementary details that may be provided, such as the Pryda Installation Guides.

Timber verification and grading values are in accordance with clause B1 and timber treatment in accordance with clause B2 of the New Zealand Building Code.

I/we confirm that the trusses for this project have been manufactured in accordance with the fabrication specifications provided by Pryda New Zealand

Name: Steve Carson Position: Detailer

Signed: Date: 09-11-2011

Paraparaumu Prenail Ltd.
37 Ihakara St. PARAPARAUMU Ph (04) 902 5618 Fax (04) 902 5619

Date: 09-11-2011
Pryda Build V 3.0.3.169

Producer Statement - PS1 - Design

Job Ref: **4481A**

This producer statement applies to the structural engineering design software "Pryda Build" supplied by Pryda NZ to

Paraparaumu Prenail Ltd.

who is licensed to use the software to produce nailplated timber roof truss, floor truss, lintel and beam designs. These truss designs are in accordance with sound and widely accepted engineering principles and comply with the Compliance Document for the New Zealand Building Code, Clause B1, and New Zealand Building Code Verification Method B1/VM1. The durability shall comply with the New Zealand Building Code, Clause B2, for importance level 2 and a design working life of 50 years.

In addition to the above, this software also complies in part with:

ANSI / TPI 1 - 2002 National Design Standard for metal plate connected wood truss construction.

AS 1649 - 2001 Timber - Methods of test for mechanical fasteners and connectors - Basic working loads and characteristic strengths.

The truss designs require that the supporting structure is stable in its own right, and that the trusses will be braced in accordance with the New Zealand Building Code Standard NZS 3604:2011, and any supplementary details provided, such as the Pryda Installation Guides.

Pryda NZ holds a current policy of Professional Indemnity Insurance with cover no less than NZ$2 million. The policy includes the engineering design processes used in the software.

On behalf of Pryda NZ (a division of ITW New Zealand)

A C van Blerk BSc (Eng) MIPENZ (214689) CPEnd IntPE
Engineering Services Manager

TRUSS TIEDOWN LEGEND

"Z" -2/ Z nails

"U" - 1/ U nail at bottom chord

2/MG -2/ Multigrips
(1/ each side of truss)

1/MGT - 1/ Multigrip

F/BKT - 1/Framing Bracket
(Joist Hanger)

WS6(wr) - ends of WS6 folded & nailed under top plate

N.O.A - 2/ Nail on Angles

Note : Remaining Trusses without fixings, require a minimum of 3 scew nails

BUILDER: Please tack all the trusses when standing and only nail home once you have completed the roof and all truss members are fitting.

IMPORTANT: Do not cut or alter structural spanning trusses in any way.

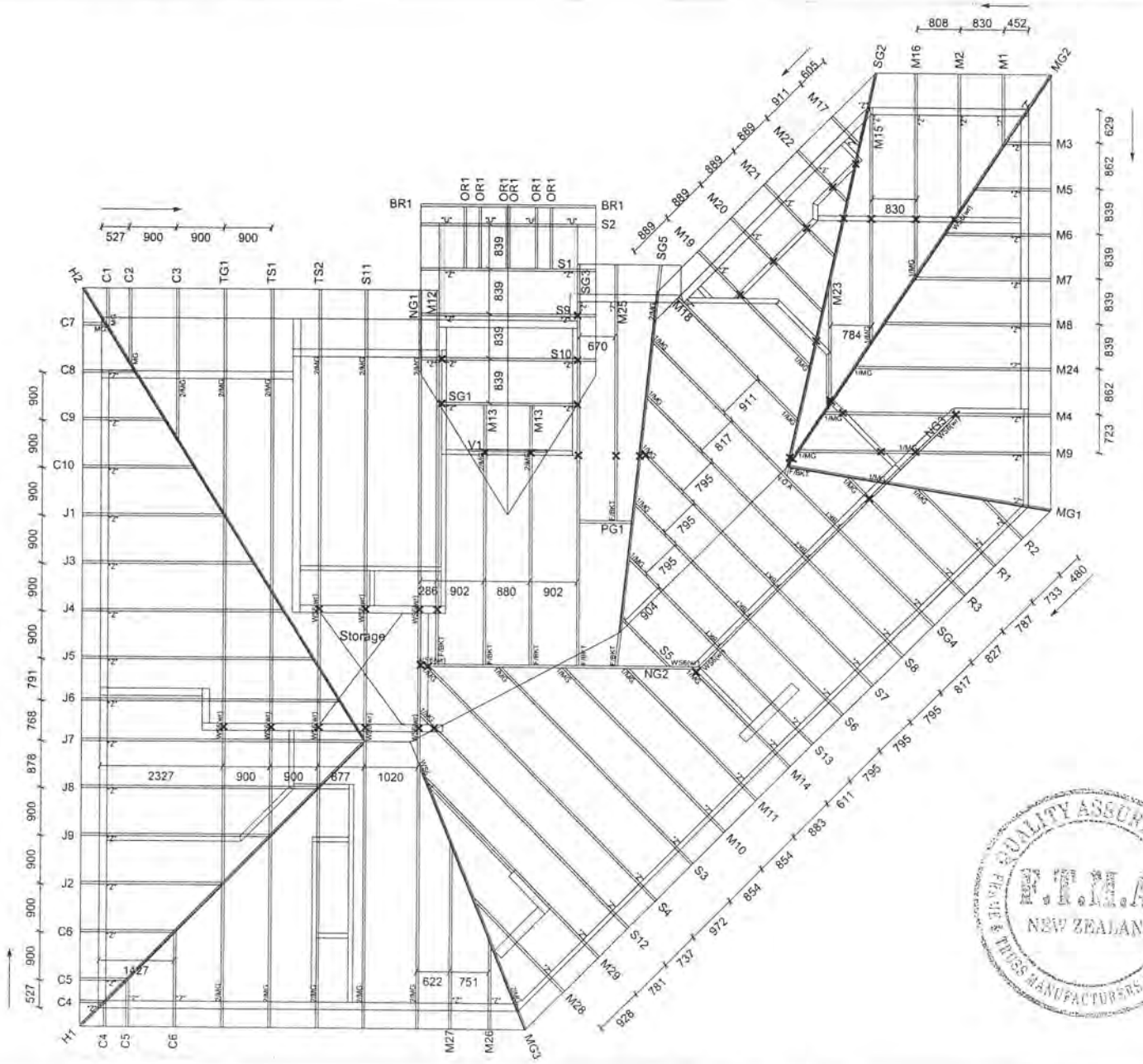

FTMA NEW ZEALAND

QUALITY ASSURANCE F.T.M.A. NEW ZEALAND TRUSS MANUFACTURERS ASSOCIATION

pryda

Customer : Ward Residence
Site Address : 35 Kotere Street
: Waikanae

Roofing	Corrugated iron
Pitch	30.00 Deg.
Spacing	900
Design Wind Velocity	50.00 m/s (Ult.)
Detailer	Steve Carson

Job Ref 4481a
Scale
Level

Model Producer Statement PS3 (Customer copy)

Form D2

Model Producer Statement PS3

Installation of Solar Water Heating System.

Council: Kapiti Council

Building Consent No: 110397

Producer Statement Issued By: Solar Works Ltd

(Suitably qualified solar water heating system installer)

Address of installer: 6 Ocean Vista Lane Paraparaumu 5032

Telephone Number for Installer: 0800 479 479

Product and Model Number Installed: Azzuro custom design

Supplier of Product: Solar Works Ltd

Registered Plumber (if applicable): Greg Winter Registration No. 13315

Registered Electrician (if applicable) Stones Electrical Registration No.

Address of Property on which installed: 35B Kotare Street Waikanae

Location of installation: North facing roof. Cylinder in garage.

Owner of Property on which installed: Tony Wood

Property description: Lot.....DP.....

The system has been installed such that the requirements of the New Zealand Building Code have been met. Plumbing work has been installed to meet the requirements of standard AS/NZS3500.4.

Registered Plumber Signature: ..... Date: 23/4/12

The solar water heating system described above has been installed on a dwelling on the named property according to the Code of Practice for Manufacture and Installation of Solar Water Heating Systems in New Zealand and the requirements of the Building Consent.

The system has been located as shown on the drawings provided with the Building Consent Application. A check has been made by a suitably qualified person to ensure that the system is located over suitably sound load bearing walls and strengthening of roof framing has been undertaken according to the guidelines provided by the system supplier and meets the requirements of Approved Document B1 of the New Zealand Building Code. The installation has been undertaken in terms of manuals and instructions from the Product Supplier who is a Solar Industries Association Accredited Supplier.

I certify that I have been appropriately trained in the installation of the named Product by the Product Supplier and operate under that Supplier's accreditation. As an independent solar water heating system installer I am covered by a current Professional Indemnity Insurance Policy to a current value of $ 2 million

Installer Signature: ..... Date: 23/4/12

Validity authenticated in accordance with KCDC Policy 002

21 NOV 2012

Signature:

Producer Statement

Solar Water Heater Installation

Construction Review

Issued by..... Registration Number.....

To Kapiti Coast District Council

In respect to the following AS/NZS 2712: 2007 G12/AS2

Piped Services installed in accordance with G12/AS1 as shown on the approved plans or as per the attached amended plan.

Installed at.....

Building Consent No.....

As a Craftsman plumber, currently holding an annual practicing license, certify that I, or personnel under my control, have carried out the installation of the above system and I believe on reasonable grounds that the installation complies with the New Zealand Building Code.

Name.....Signed.....Date.....

KCDC Office use only

Producer Statement author authenticated and current registration verified

Verification & Registration checked: https://www2.pgdb.co.nz/PGDB/PublicRegister

Date.....

Name.....

Signature.....

Electrical Certificate of Compliance

For a low voltage installation if prescribed electrical work has been done on any part of it and the prescribed electrical work involved placing, replacing or repositioning conductors or fittings attached to conductors.

ME 99916

No. of attachments:

To be completed whether or not an Inspection is required.

CUSTOMER INFORMATION – PLEASE PRINT CLEARLY

Name of customer: MR. WARD Contact Ph No: 04 293 7203

Address of installation: 35B Kotare St, Waikanae

Postal address of customer if different from above:

DECLARATION OF CONFORMITY *(Please tick appropriate boxes or attach the Declaration of Conformity from the installation designer)*

I declare that the design of the installation or part- installation described below complies with:

(a) either Part 2 of AS/NZS 3000:2007 ☑ or Part 1 of AS/NZS 3000:2007 and Regulation 59 ☐

(b) and is compatible with the following supply system: 230V/400V MEN ☑ or other system (attached) ☐

This declaration is issued by:

Name: T. GRIFFIN Date: 17/4/12 Signature: T. Griffin

WORK DETAILS

No. of lighting circuits 3

No. of socket outlets 35

No. of fixed appliances 4

Please tick as appropriate where work includes:

Mains ☑ Electrical Lines ☐

Main earthing system ☐

MEN switchboard closest to the point of supply ☐

Description of work carried out by the installer (or if multiple installers or homeowner please attach details of work done ☐)

Connect property to mains supply, install power + lighting to new residential property.

CERTIFICATION OF WORK *(Please tick appropriate boxes)*

I am satisfied, and certify, that the work described was done in accordance with the Electricity Act 1992; and that the completed installation or part-installation on which the work was done is electrically safe.

☑ The work has been installed in accordance with the design detailed in the Declaration of Conformity described above

☑ The tests as required by the Electricity (Safety) Regulations 2010 have been satisfactorily completed *(Results attached ☐)*

☑ The installation has an earthing system that is correctly rated

☑ The fittings on which work has been done are safe to connect to a power supply *(Supplier declaration of conformity attached ☐)*

☑ The installation or part-installation is safe to connect to a power supply

Certifier details (This section must be completed)

Name: T. Griffin Registration No: 257608

Company: LWS Contact Ph No: 027 522 2251

Date: 17/4/12 Signature: T. Griffin

Electrical Worker details (if not certifier)

Name: Registration No:

Company: Contact Ph No:

Date: Signature:

Inspected in accordance with KCDC Policy 002

Inspection details Electrical work requiring Inspection by a registered electrical Inspector

2 1 NOV 2012

☑ Mains work (Mains, MEN switchboards closest to the point of supply or main earthing systems)

☐ Medical ☐ High Voltage Work

☐ Mains parallel generation systems ☐ Hazardous ☐ Animal Stunning/Meat Conditioning

☐ Work carried out in accordance with Part 1 of AS/NZS 3000:2007

Signature:

I have inspected as per the Electricity (Safety) Regulations 2010 the work described above, and certify it electrically safe.

Name: N. WAGSTAFF Registration No: T241852 Contact Ph No:

Date: 18/4/12 Signature: N Wagstaff

ECANZ COC June 2010

CUSTOMER COPY – THIS IS AN IMPORTANT DOCUMENT AND SHOULD BE RETAINED

This form is approved by the Electrical Workers Registration Board (PO Box 10-156, Wellington. Freephone 0800 66 1000) for the purposes of the Electricity (Safety) Regulations 2010.

Electrical Certificate of Compliance

For a low voltage installation if prescribed electrical work has been done on any part of it and the prescribed electrical work involved placing, replacing or repositioning conductors or fittings attached to conductors.

ME 82676

No. of attachments: J/N 53843

$10,000 WORKMANSHIP GUARANTEE

To be completed whether or not an Inspection is required.

CUSTOMER INFORMATION – PLEASE PRINT CLEARLY

Name of customer: Cox and Sweetman Builders Contact Ph No:

Address of installation: 35B Kotare St, Waikanae

Postal address of customer if different from above:

DECLARATION OF CONFORMITY *(Please tick appropriate boxes or attach the Declaration of Conformity from the installation designer)*

I declare that the design of the installation or part- installation described below complies with:

(a) either Part 2 of AS/NZS 3000:2007 ☑ or Part 1 of AS/NZS 3000:2007 and Regulation 59 ☐

(b) and is compatible with the following supply system: 230V/400V MEN ☐ or other system (attached) ☐

This declaration is issued by:

Name: Jarred Hooper Date: 20/10/2011 Signature:

WORK DETAILS

No. of lighting circuits 1

No. of socket outlets 1

No. of fixed appliances ~~☐~~

Please tick as appropriate where work includes:

Mains ☑ Electrical Lines ~~☐~~

Main earthing system ~~☐~~

MEN switchboard closest to the point of supply ~~☐~~

Description of work carried out by the installer (or if multiple installers or homeowner please attach details of work done ☐)

Cut and Extended Underground mains

CERTIFICATION OF WORK *(Please tick appropriate boxes)*

I am satisfied, and certify, that the work described was done in accordance with the Electricity Act 1992; and that the completed installation or part-installation on which the work was done is electrically safe.

☑ The work has been installed in accordance with the design detailed in the Declaration of Conformity described above

☑ The tests as required by the Electricity (Safety) Regulations 2010 have been satisfactorily completed *(Results attached ☐)*

☑ The installation has an earthing system that is correctly rated

☑ The fittings on which work has been done are safe to connect to a power supply *(Supplier declaration of conformity attached ☐)*

☑ The installation or part-installation is safe to connect to a power supply

Certifier details (This section must be completed)

Name: Jarred Hooper Registration No: E249249

Company: Shores Electrical Contact Ph No: 0274512174

Date: 20/10/2011 Signature:

Electrical Worker details (if not certifier)

Name: Registration No:

Company: Contact Ph No:

Date: Signature:

Validity authenticated in accordance with KDC Policy 002

21 NOV 2012

Signature:

Inspection details Electrical work requiring Inspection by a registered electrical Inspector

☑ Mains work (Mains, MEN switchboards closest to the point of supply or main earthing systems)

☐ Medical ☐ High Voltage Work

☐ Mains parallel generation systems ☐ Hazardous ☐ Animal Stunning/Meat Conditioning

☐ Work carried out in accordance with Part 1 of AS/NZS 3000:2007

I have inspected as per the Electricity (Safety) Regulations 2010 the work described above, and certify it electrically safe.

Name: Chris Jennings Registration No: 1246594 Contact Ph No:

Date: 20th - 10 - 11 Signature:

ECANZ COC June 2010

CUSTOMER COPY – THIS IS AN IMPORTANT DOCUMENT AND SHOULD BE RETAINED

This form is approved by the Electrical Workers Registration Board (PO Box 10-156, Wellington. Freephone 0800 66 1000) for the purposes of the Electricity (Safety) Regulations 2010.

P.I.M. No 110397
Building Regulation Clause(s) B1 , B2 (limited)

PRODUCER STATEMENT – PS4 – CONSTRUCTION REVIEW

(Guidance notes on the use of this form are printed on the reverse side)

ISSUED BY: Allan Bruce Pullenger
(Suitably qualified Design Professional)

TO: Mr & Mrs Ward

TO BE SUPPLIED TO: Kapiti Coast District Council
(Territorial Authority)

IN RESPECT OF: Structural Beams, Retaining, pole & concrete walls
(Description of Building Work)

AT: 35b Kotare Street

Waikanae ,
(Address)

LOT 3 **DP** 64335 **SO**

Designscape shankbait ltd *(Design Firm)* been engaged by owner *(Owner/Developer/Contractor)*

to provide structural design and inspection services
(Extent of Engagement)

in respect of clause(s) B1, B2 (limited) of the Building Regulations 2004 for the building work described by the drawings and specifications prepared by Designscape shankbait ltd

titled Structural Details and numbered 2690

Authorised variation(s) No. 2 (copies attached) have been issued during the course of the works. I have sighted Building Consent No. 110397 and the attached conditions of building consent.

As an independent design professional covered by a current policy of Professional Indemnity Insurance to a minimum value of $200,000, I or personnel under my control have carried out periodic reviews of the work appropriate to the engagement and based upon these reviews and information supplied by the contractor during the course of the works

I BELIEVE ON REASONABLE GROUNDS that ☐ All ■ Part only as specified in the attached particulars of the building work under the above Building Consent with respect to Clause(s) B1 VM4 of the Building Regulations 1992 has been completed to the extent required by that Building Consent.

Validity authenticated in accordance with KCDC Policy 002

25 FEB 2013

.....
(Signature suitably qualified Design Professional)

Date 18/06/2012
Signature:

.....NZCE Rea.....
(Professional Qualifications)

IPENZ Reg No **57930**

Member CertETn ■

...298 Rosetta Road Raumati.....
(Address)

This form to accompany Form 9 of the Building Regulations 1992 for the issue of a Code Compliance Certificate.

GUIDANCE ON USE OF PRODUCER STATEMENTS

This producer statement has been prepared by a combined task committee consisting of members of the New Zealand Institute of Architects, Institution of Professional Engineers New Zealand, Association of Consulting Engineers New Zealand and the Building Officials Institute of New Zealand.

Four producer statements are available and brief details on the purpose of each are as follows:

Design: Intended for use by the person responsible for the design in circumstances where the Territorial Authority will rely on the producer statement to issue a Building Consent.

Design Review: Intended for use by a suitably qualified independent design professional where the Territorial Authority does not undertake an internal review and relies on the independent design professional's review to issue the Building Consent.

Construction: Intended for the use by the contractor of the building works where the Territorial Authority requires a producer statement at the completion of construction.

Construction Review: Intended for use by the person required by the Building Consent to undertake construction monitoring of the building works in circumstances where the Territorial Authority will rely on the producer statement to issue a Code Compliance Certificate.

The producer statements system is intended to provide Territorial Authorities with reasonable grounds for the issuing of a Building Consent or Code Compliance Certificate without having to duplicate design or construction checking by others.

The following criteria are recommended to Territorial Authorities with respect to the use of the producer statements.

Definition of Suitably Qualified Design Professional

A suitably qualified design professional should have recognised qualifications and experience for the work undertaken and should be either:

(i) an active member of the Association of Consulting Engineers New Zealand (ACENZ) or;
(ii) a member of the Institution of Professional Engineers New Zealand (IPENZ) having a current policy of Professional Indemnity Insurance for a sum not less than $200,000 or;
(iii) a member of the New Zealand Institute of Architects (NZIA) having a current policy of Professional Indemnity Insurance for a sum of not less than $200,000.

Design Build Contracts

If the design professional is engaged by the contractor, the territorial authority should satisfy itself that it is appropriate for the territorial authority to rely upon a producer statement from the design professional.

Consulting Services during Construction Phase

There are several levels of service which a design professional may provide during the construction phase of a project. The territorial authority is encouraged to require that the service to be provided by the design professional is appropriate for the project concerned.

Requirement to provide Producer Statement

Territorial Authorities should ensure that the applicant is aware of any circumstances in which there may be a requirement for producer statements for the construction phase of building work at the time the building consent is issued as no design professional should be expected to provide a producer statement unless such a requirement forms part of the design professional's engagement.

Attached Particulars

Attached particulars referred to in this producer statement refer to supplementary information appended to the producer statement.

Warranty & life time statement

aquatherm®	fusiotherm®	lilac	climatherm®	firestop
underfloor heating	pipe system	pipe system for recycled reclaimed water	pressure pipe system for chilled and hot applications	sprinkler pipe system

aquatherm GmbH manufacture all pipes and fittings in accordance with the German DIN confirming a 50 year guarantee of service life in accordance with the permissible working pressure / temperature of their technical product manuals. Within the scope of this, aquatherm will supply replacement material pipe and fittings if damages are traceable to materials faults and defects.

Liability Warranty

furthermore within the scope of the aquatherm GmbH gives a 10 year guarantee which compensates for material damage to third persons, for investigation, removal, replacement, acceptance, dismounting or laying bare of all defective goods.

aquatherm Gmbh guarantee is conditional on:

- The fusion of joining of pipe and fittings using only aquatherm GmbH welding tools and devices.
- Installation of pipe and fittings are certified aquatherm installers and adherence to aquatherm GmbH technical rules and guidelines for correct installation principles.

Limits of Liability

- For bodily injury 15.000.000 Euro
- For property damage [per occurrence] 15.000.000 Euro

Installation Address:		
35 B Kotare Waikanae		
Description of Installation	Domestic ✓	Commercial
Contractor: Andy Magee Plumbing Ltd		Installers # 11601
Completion Date: 30/10/12		Signature:

This warranty must be fully completed, signed and returned with the completed test sheet within three months of the completion of the project installation to the New Zealand agent:

aquatherm NZ Limited
P.O. Box 99 393
Newmarket,
Auckland 1149

Phone: 09 570 7204 Fax: 09/570 7206
www.aquatherm.co.nz

aquatherm NZ Test record - fusiotherm® - pipe installation principles

Description of the Installation		
Street Address	35B Kotare	
Suburb		
City	Waikanae	
Type of Installation	Domestic	✓
	Commercial	
Type of Pipe	fusiotherm®	
	climatherm	
	lilac	
	firestop	
✓	underfloor	
Time testing Started		25/11/11
Time testing finished		30/2/12
Test period (minutes)		Months
Client: Tony Ward		
Contractor: Andy Magee Plumbing		
Installers #: Andy	Date: 30/10/12	
Declaration: I declare that I have installed the above product in accordance with aquatherm specifications with no branding mix		
Signature:		

aquatherm® NZ limited must recieve this information within 3 months of the installation for the waranty to be valid. Please consult with your local area Council as the may require a copy of the test results for the records.

Preliminary Test
[Testing procedure NZ January 2001]
Test pressure - 20 bar:

1. Test pressure 20 bar 10 minutes.
2. Unpressurise for 1 minute.
3. Test pressure 20 bar 5 minutes.
4. Unpressurise for 1 minute.
5. Test pressure 20 bar for 5 minutes.
6. Unpressurise.

WARNING
It is imperative to have movement during test period. Tight clips or damaged pipes in frame work will result in an incomplete test which will result in the warranty being invalid.

Result preliminary test:
The test is to be conducted as a continuous test as 20 bar with the five steps noted above.

The system MUST be pressurised THREE TIMES with a minimum rest of one minute between re-pressurising.

If leaking occurs, please replace the part and re start the testing procedure.

The test is complete and acceptable when the above has been undertaken and no leaks are present.

Finally, complete all parts for the test sheet and return a copy to:

aquatherm NZ Limited

P.O. Box 99393,
Newmarket ,
Auckland 1149

designscape
298 rosetta road raumati
04 902 8528 or 027 442 0486

INSTRUCTION AND OR VARIATION TO CONTRACT 2690-01 BC 110397

CONTRACT : **New House**

PRINCIPAL : **Tony Ward**

DATE : **24/11/11**

NOTE this instruction is issued to the builder. It is the builders responsibility to liaise with the client, and to supply a copy to the local authority. If the local authority has a fee demand, then this is the builders responsibility. Designscape takes no liability for advising council, or any cost attached to the variation or instruction,

INSTRUCTION

Type instructions here
Owner has selected cavity slider doors in 3 locations. This has changed the bracing to line C1 and P2 (combined), and also to line N2 with reduction in wall length. Attached is plan showing altered brace layout to these lines.

e-mail allan@designscape.net.nz

designscape
298 rosetta road raumati
04 902 8528 or 027 442 0486

INSTRUCTION AND OR VARIATION TO CONTRACT 2690-02 BC 110397

CONTRACT : **New House**

PRINCIPAL : **Tony Ward**

DATE : **27/02/12**

NOTE this instruction is issued to the builder. It is the builders responsibility to liaise with the client, and to supply a copy to the local authority. If the local authority has a fee demand, then this is the builders responsibility. Designscape takes no liability for advising council, or any cost attached to the variation or instruction,

INSTRUCTION

Type instructions here
Altered bracing to ensuite, bathroom and entry. Attached plan and updated calculations.

e-mail allan@designscape.net.nz

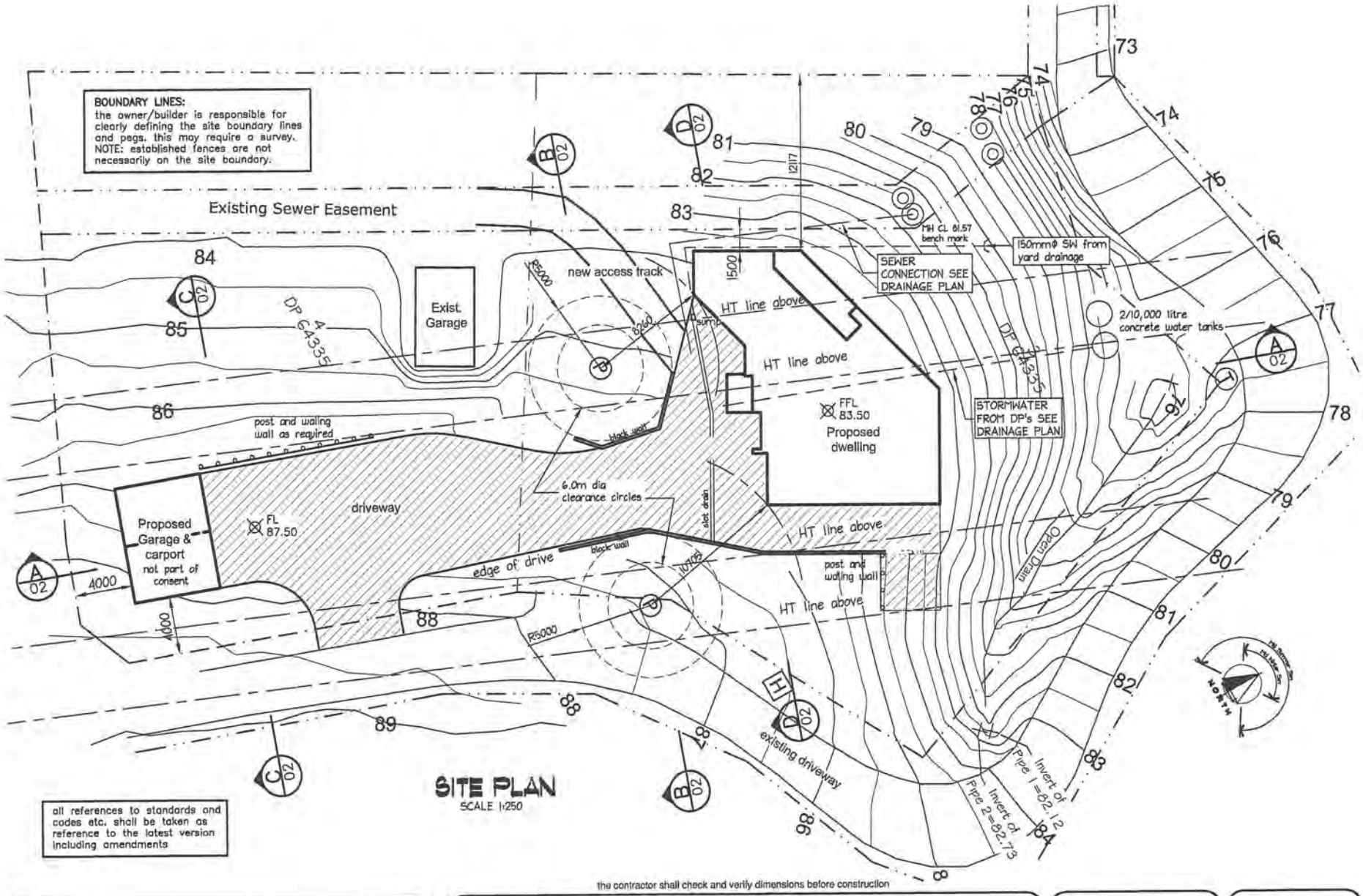

SITE PLAN
SCALE 1:250

all references to standards and codes etc. shall be taken as reference to the latest version including amendments

the contractor shall check and verify dimensions before construction

designscape
sharic ball ltd
Civil, Structural and Building design
http://www.designscape.net.nz
email info@designscape.net.nz

Allan Pullenger AIPENZ CertETn
298 Rosetta Road
sunny Raumati

phone & fax 04 902 8528
Mob 027 442-0486

WARD HOUSE
35B KOTARE ST-WAIKANAE
PROPOSED DWELLING

scale	1:250
date	June 2011
drawn	Stuart Jackson
designed	Allan Pullenger

plan number
2690-01
Sheet 01 of 21

designscape
298 rosetta road raumati
04 902 8528 or 027 442 0486

INSTRUCTION AND OR VARIATION TO CONTRACT 2690-01 BC 110397

CONTRACT : **New House**

PRINCIPAL : **Tony Ward**

DATE : **24/11/11**

NOTE this instruction is issued to the builder. It is the builders responsibility to liaise with the client, and to supply a copy to the local authority. If the local authority has a fee demand, then this is the builders responsibility. Designscape takes no liability for advising council, or any cost attached to the variation or instruction.

INSTRUCTION

Type instructions here
Owner has selected cavity slider doors in 3 locations. This has changed the bracing to line C1 and P2 (combined), and also to line N2 with reduction in wall length.
Attached is plan showing altered brace layout to these lines.

e-mail allan@designscape.net.nz

Ward

Allan Pullenger

GIB® EzyBrace™ FP for GIB® EzyBrace™ Systems, 2009

GIB® Wall Bracing Calculation Sheet B — Single or Upper Walls Across

V03/09

Across

Bracing Line		*Bracing Elements provided*						*Wind*	*Earthq.*
1	2	3	4	6	5	7	8	9W	10EQ
Line Label	Minimum BUs Req/Ach	Bracing Element No.	Available Wall Length L (m)	Angle to Bracing line (degrees)	Element Height H (m)	Bracing Type	Supplier	BUs Achieved	BUs Achieved
M	enter	1	0.8		2.4	BL1(10)	GIB®	102	89
	not enough	2	0.9		2.4	BL1(10)	GIB®	116	99
line totals		3							
W	218	4							
EQ	187	5							
N	enter	1	0.9		2.4	BL1(10)	GIB®	116	99
	not enough	2	1.1		2.4	BL1(10)	GIB®	144	118
line totals		3	1.6		2.4	BL1(10)	GIB®	219	163
W	546	4	1		2.4	GS1(10)	GIB®	68	55
EQ	435	5							
O	enter	1	1.5		2.4	BL1(10)	GIB®	203	155
	not enough	2	0.69		2.4	BL1(10)	GIB®	87	77
line totals		3							
W	291	4							
EQ	232	5							
P	enter	1	1.3		2.4	BL1(10)	GIB®	173	137
	not enough	2	2.2		2.4	BL1(10)	GIB®	306	220
line totals		3							
W	479	4							
EQ	357	5							
Q	enter	1							
		2							
line totals		3							
W		4							
EQ		5							
R	enter	1							
		2							
line totals		3							
W		4							
EQ		5							
S	enter	1							
		2							
line totals		3							
W		4							
EQ		5							
T	enter	1							
		2							
line totals		3							
W		4							
EQ		5							

©Winstone Wallboards Limited, 1999-2009. All rights reserved.

						Wind	Earthq.
Totals Achieved	Achieved/Demand	W	101%	EQ	439%	1534	1212
Concrete Slab						*OK*	*OK*
Totals Required (from Demand)						1521	276

Ward

Allan Pullenger

GIB® EzyBrace™ FP for GIB® EzyBrace™ Systems, 2009

GIB® Wall Bracing Calculation Sheet B

Single or Upper Walls Across

V03/09

Across

Bracing Line		*Bracing Elements provided*						*Wind*	*Earthq.*
1	2	3	4	6	5	7	8	9W	10EQ
Line Label	Minimum BUs Req/Ach	Bracing Element No.	Available Wall Length L (m)	Angle to Bracing line (degrees)	Element Height H (m)	Bracing Type	Supplier	BUs Achieved	BUs Achieved
M	enter	1	0.8	45	2.4	BLG	GIB®	83	76
	not enough	2	1.2	45	2.4	BL1(10)	GIB®	112	90
line totals		3	1.2	45	2.4	BL1(10)	GIB®	112	90
W	307	4							
EQ	257	5							
N	enter	1	2		2.4	BLG	GIB®	300	270
	not enough	2	0.8	45	2.4	BLG	GIB®	83	76
line totals		3							
W	383	4							
EQ	346	5							
O	enter	1	2.4	45	2.4	BLG	GIB®	255	229
	not enough	2	1.4		2.4	BL1(10)	GIB®	188	146
line totals		3							
W	443	4							
EQ	375	5							
P	enter	1	1.6	45	2.4	BLG	GIB®	170	153
	not enough	2	1.2		2.4	BLG	GIB®	180	162
line totals		3	0.8		2.4	BLG	GIB®	117	108
W	561	4	0.9	45	2.4	BLG	GIB®	94	86
EQ	509	5							
Q	enter	1							
		2							
line totals		3							
W		4							
EQ		5							
R	enter	1							
		2							
line totals		3							
W		4							
EQ		5							
S	enter	1							
		2							
line totals		3							
W		4							
EQ		5							
T	enter	1							
		2							
line totals		3							
W		4							
EQ		5							

©Winstone Wallboards Limited, 1999-2009. All rights reserved.

						Wind	Earthq.
Totals Achieved	Achieved/Demand	W	100%	EQ	398%	1694	1487
Concrete Slab						*OK*	*OK*
Totals Required (from Demand)						1693	374

designscape
298 rosetta road raumati
04 902 8528 or 027 442 0486

INSTRUCTION AND OR VARIATION TO CONTRACT 2690-02 BC 110397

CONTRACT : **New House**

PRINCIPAL : **Tony Ward**

DATE : **27/02/12**

NOTE this instruction is issued to the builder. It is the builders responsibility to liaise with the client, and to supply a copy to the local authority. If the local authority has a fee demand, then this is the builders responsibility. Designscape takes no liability for advising council, or any cost attached to the variation or instruction.

INSTRUCTION

Type instructions here
Altered bracing to ensuite, bathroom and entry. Attached plan and updated calculations.

e-mail allan@designscape.net.nz

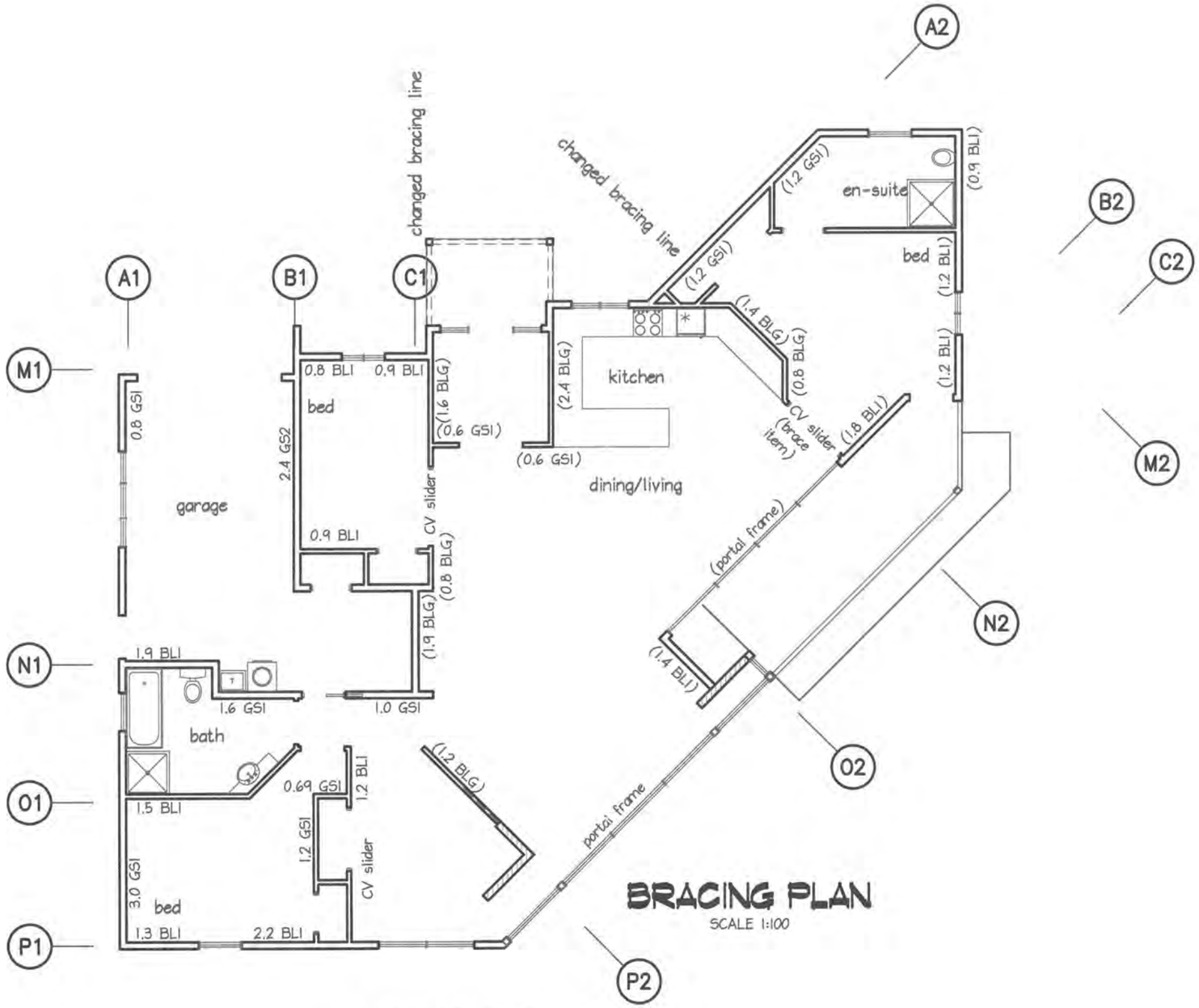

BRACING PLAN

SCALE 1:100

amended bracing plan nov 2011

the contractor shall check and verify dimensions before construction

designscape
shark bait ltd
Civil, Structural and Building design
http://www.designscape.net.nz
email info@designscape.net.nz

Allan Pullenger AIPENZ CertETn
298 Rosetta Road
sunny Raumati

phone & fax 04 902 8528
Mob 027 442-0486

WARD HOUSE
35B KOTARE ST-WAIKANAE
PROPOSED DWELLING

scale	1:100
date	June 2011
drawn	Stuart Jackson
designed	Allan Pullenger

plan number
2690-01
Sheet 19 of 21

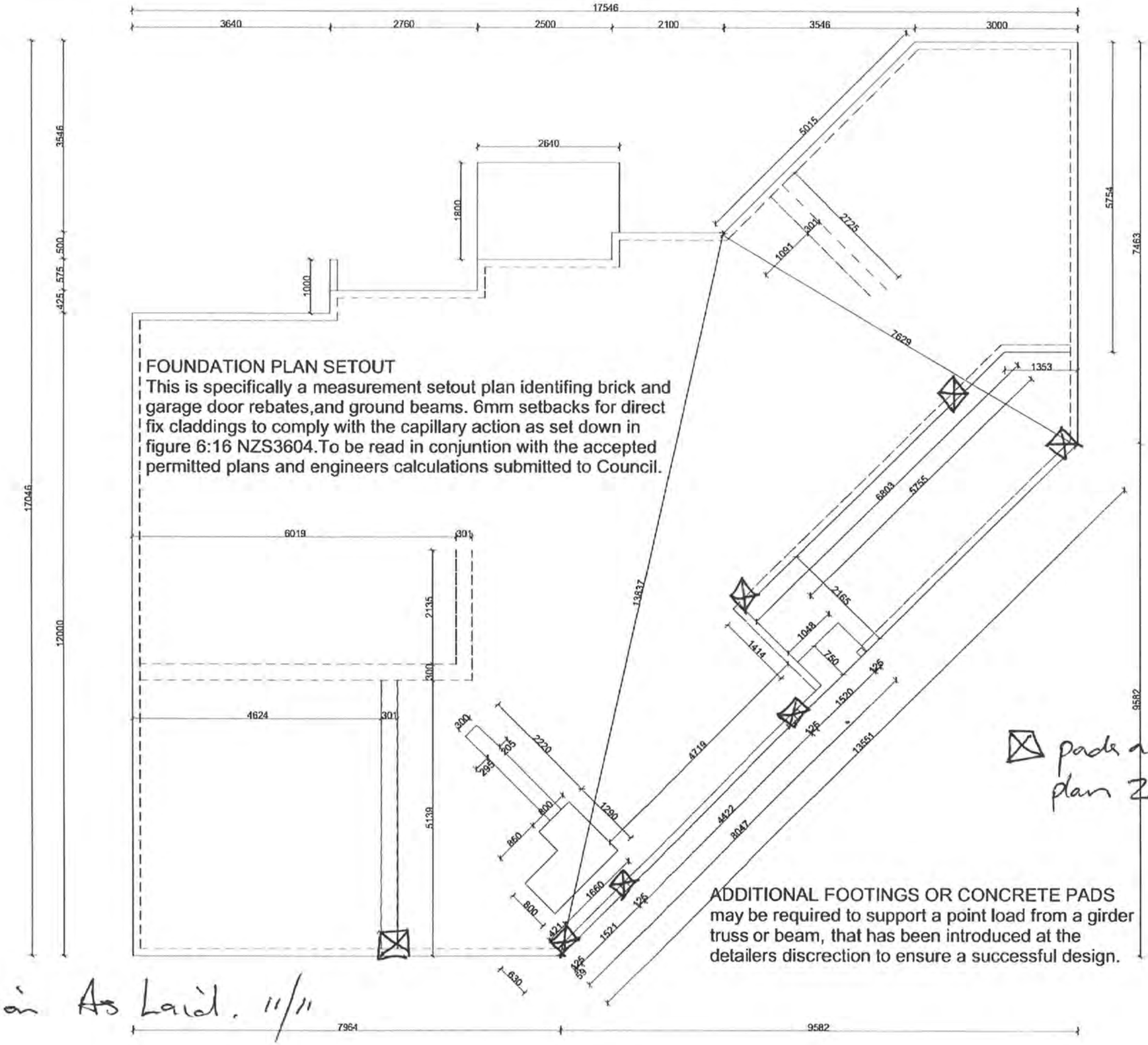

FOUNDATION PLAN SETOUT
This is specifically a measurement setout plan identifing brick and garage door rebates,and ground beams. 6mm setbacks for direct fix claddings to comply with the capillary action as set down in figure 6:16 NZS3604.To be read in conjuntion with the accepted permitted plans and engineers calculations submitted to Council.

pads as required plan 2690/8

ADDITIONAL FOOTINGS OR CONCRETE PADS may be required to support a point load from a girder truss or beam, that has been introduced at the detailers discrection to ensure a successful design.

Foundation As Laid. 11/11

designscape
sharkbait ltd
tel 902 8528 or shoe 027 442 0486
email allan@designscape.net.nz

INSPECTION SHEET

JOB NUMBER : 2690 **BC**: 110397
CLIENT : Tony Ward **DATE**: 10/11/11
LOCATION : 35b Kotare Street
CONTRACTOR: Cox & Sweetman **CONTACT**: Bryan
INSPECTOR : ☑ Allan ☐ Stuart ☐ Peter

WEATHER : Fine Overcast ✓ Wet
NUMBER WORKMAN ON SITE : 6
INSPECTION : ☐ Base check ☑ Base steel ☐ Stem steel ☐ Compaction
☐ Structural Steel ☐ Piling ☐ other

Verbal Instructions given (if any) : Confirmed in writing

General Comments :
Check base steel to slab, and first section retaining wall by house
Base slab has Ribraftpods instead of 50mm polystyrene.
Ground beams changed by prenailers
Checked steel. Needs cotter rods under thickening for pads to beamends.
Check steel to base of 3m high wall. All correct.

OK to pour.

This report does not constitute a PS4, but forms a basis on which it may be issued.

Faxed ☐ Charged ☐

designscape
298 rosetta road raumati
04 902 8528 or 027 442 0486

INSTRUCTION AND OR VARIATION TO CONTRACT 2690-01 BC 110397

CONTRACT : **New House**

PRINCIPAL : **Tony Ward**

DATE : **24/11/11**

NOTE this instruction is issued to the builder. It is the builders responsibility to liaise with the client, and to supply a copy to the local authority. If the local authority has a fee demand, then this is the builders responsibility. Designscape takes no liability for advising council, or any cost attached to the variation or instruction,

INSTRUCTION

Type instructions here
Owner has selected cavity slider doors in 3 locations. This has changed the bracing to line C1 and P2 (combined), and also to line N2 with reduction in wall length.
Attached is plan showing altered brace layout to these lines.

e-mail allan@designscape.net.nz

Ward House 35b Kotare Street

Bracing change assement

Line P2	*wind*	*seismic*
Total unts required	381	347
Line C1	249	545
Total units for this brace line	**630**	**892**
Achived by		
1.2 BL1		
1.8 BLg		
.8 BLG		
1.6 BLG		
Achieved	**786**	**695**

Brace line N2		
Change the 2 BLG required	***300***	***270***
1.4 BLG	210	189
CV Slider	114	99
Achieved	**324**	**288**

So Ok

Ward

Allan Pullenger

GIB® EzyBrace™ FP for GIB® EzyBrace™ Systems, 2009

GIB® Wall Bracing Calculation Sheet B — Single or Upper Walls Across

V03/09

Across

Bracing Line		*Bracing Elements provided*						*Wind*	*Earthq.*
1	2	3	4	6	5	7	8	9W	10EQ
Line Label	Minimum BUs Req/Ach	Bracing Element No.	Available Wall Length L (m)	Angle to Bracing line (degrees)	Element Height H (m)	Bracing Type	Supplier	BUs Achieved	BUs Achieved
M	enter	1	0.8		2.4	BL1(10)	GIB®	102	89
	not enough	2	0.9		2.4	BL1(10)	GIB®	116	99
line totals		3							
W	218	4							
EQ	187	5							
N	enter	1	0.9		2.4	BL1(10)	GIB®	116	99
	not enough	2	1.1		2.4	BL1(10)	GIB®	144	118
line totals		3	1.6		2.4	BL1(10)	GIB®	219	163
W	546	4	1		2.4	GS1(10)	GIB®	68	55
EQ	435	5							
O	enter	1	1.5		2.4	BL1(10)	GIB®	203	155
	not enough	2	0.69		2.4	BL1(10)	GIB®	87	77
line totals		3							
W	291	4							
EQ	232	5							
P	enter	1	1.3		2.4	BL1(10)	GIB®	173	137
	not enough	2	2.2		2.4	BL1(10)	GIB®	306	220
line totals		3							
W	479	4							
EQ	357	5							
Q	enter	1							
		2							
line totals		3							
W		4							
EQ		5							
R	enter	1							
		2							
line totals		3							
W		4							
EQ		5							
S	enter	1							
		2							
line totals		3							
W		4							
EQ		5							
T	enter	1							
		2							
line totals		3							
W		4							
EQ		5							

©Winstone Wallboards Limited, 1999-2009. All rights reserved.

						Wind	Earthq.
Totals Achieved	Achieved/Demand	W	101%	EQ	439%	1534	1212
Concrete Slab						*OK*	*OK*
Totals Required (from Demand)						1521	276

Ward Allan Pullenger

GIB® EzyBrace™ FP for GIB® EzyBrace™ Systems, 2009

GIB® Wall Bracing Calculation Sheet B — Single or Upper Walls Across — V03/09

Across

Bracing Line		Bracing Elements provided						Wind	Earthq.
1	2	3	4	6	5	7	8	9W	10EQ
Line Label	Minimum BUs Req/Ach	Bracing Element No.	Available Wall Length L (m)	Angle to Bracing line (degrees)	Element Height H (m)	Bracing Type	Supplier	BUs Achieved	BUs Achieved
M	enter	1	0.8	45	2.4	BLG	GIB®	83	76
	not enough	2	1.2	45	2.4	BL1(10)	GIB®	112	90
line totals		3	1.2	45	2.4	BL1(10)	GIB®	112	90
W	307	4							
EQ	257	5							
N	enter	1	2		2.4	BLG	GIB®	300	270
	not enough	2	0.8	45	2.4	BLG	GIB®	83	76
line totals		3							
W	383	4							
EQ	346	5							
O	enter	1	2.4	45	2.4	BLG	GIB®	255	229
	not enough	2	1.4		2.4	BL1(10)	GIB®	188	146
line totals		3							
W	443	4							
EQ	375	5							
P	enter	1	1.6	45	2.4	BLG	GIB®	170	153
	not enough	2	1.2		2.4	BLG	GIB®	180	162
line totals		3	0.8		2.4	BLG	GIB®	117	108
W	561	4	0.9	45	2.4	BLG	GIB®	94	86
EQ	509	5							
Q	enter	1							
		2							
line totals		3							
W		4							
EQ		5							
R	enter	1							
		2							
line totals		3							
W		4							
EQ		5							
S	enter	1							
		2							
line totals		3							
W		4							
EQ		5							
T	enter	1							
		2							
line totals		3							
W		4							
EQ		5							

©Winstone Wallboards Limited, 1999-2009. All rights reserved.

						Wind	Earthq.
Totals Achieved	Achieved/Demand	W	100%	EQ	398%	1694	1487
Concrete Slab						*OK*	*OK*
Totals Required (from Demand)						1693	374

Ward

Allan Pullenger

GIB® EzyBrace™ FP for GIB® EzyBrace™ Systems, 2009

GIB® Wall Bracing Calculation Sheet B — Single or Upper Walls Along

V03/09

Along

Bracing Line		*Bracing Elements provided*						*Wind*	*Earthq.*
1	2	3	4	6	5	7	8	9W	10EQ
Line Label	Minimum BUs Req/Ach	Bracing Element No.	Available Wall Length L (m)	Angle to Bracing line (degrees)	Element Height H (m)	Bracing Type	Supplier	BUs Achieved	BUs Achieved
A	enter	1	1.2		2.4	GS1(10)	GIB®	83	66
	not enough	2			2.4	GS2(10)	GIB®		
line totals		3	0.6	45	2.4	GS1(10)	GIB®	27	23
W	138	4	0.6	45	2.4	GS1(10)	GIB®	27	23
EQ	113	5							
B	enter	1	1.8		2.4	BL1(10)	GIB®	250	180
	not enough	2	1.5		2.4	GS1(10)	GIB®	104	83
line totals		3							
W	354	4							
EQ	263	5							
C	enter	1	1		2.4	portal	Steel	170	170
	not enough	2							
line totals		3							
W	170	4							
EQ	170	5							
D	enter	1							
		2							
line totals		3							
W		4							
EQ		5							
E	enter	1							
		2							
line totals		3							
W		4							
EQ		5							
F	enter	1							
		2							
line totals		3							
W		4							
EQ		5							
G	enter	1							
		2							
line totals		3							
W		4							
EQ		5							
H	enter	1							
		2							
line totals		3							
W		4							
EQ		5							

©Winstone Wallboards Limited, 1999-2009. All rights reserved.

						Wind	Earthq.
Totals Achieved	Achieved/Demand	W	101%	EQ	146%	661	545
Concrete Slab						*OK*	*OK*
Totals Required (from Demand)						658	374

designscape
298 rosetta road
telephone 04 902 8528

allan pullenger
rea a.ipenz

sharkbait ltd

Mr & Mrs Ward — Job 2690
LINTELS AND BEAMS

DATE ***11/08/2011***

BEAM NUMBER — *Tank Stand joists* — 8

LOADING

Span	L =	0.9		m
Load width (water)		0.45	0.9	m
Load LL + DL		6.10		kpa
Load per metre	**w =**	**2.745**		kn/m

BENDING MOMENT

BM = $WL^2/8$	M =	0.28	knm

BEAM SIZE

90 x 45 Timber

Depth	D =	0.09	m
Width	W =	0.045	m

STRESS

Fw = MY / I	Y =	0.045	m
I = $BD^3/12$	I =	2.73375E-06	m^4
	Fw	**4609**	kpa

DEFLECTION

E	8000000	
Deflection is $5WL^4/384EI$	**0.001**	m
Allowable L/360	0.003	m

REACTION

End Reaction is L x W /2	1.24	KN

BEAM NUMBER — *Tank Stand bearer* — 9

LOADING

Span	L =	0.9		m
Load width (water)		0.45	0.9	m
Load LL + DL		6.10		kpa
Load per metre	**w =**	**2.745**		kn/m

BENDING MOMENT

BM = $WL^2/8$	M =	0.28	knm

BEAM SIZE

90 x 45 Timber

Depth	D =	0.09	m
Width	W =	0.045	m

STRESS

Fw = MY / I	Y =	0.045	m
I = $BD^3/12$	I =	2.73375E-06	m^4
	Fw	**4609**	kpa

DEFLECTION

E	8000000	
Deflection is $5WL^4/384EI$	**0.001**	m
Allowable L/360	0.003	m

REACTION

End Reaction is L x W /2	2.47	KN

PAD AREA TO ENDS

Load 1	2.47	kn
Footing Size at 100 kpa	0.037	m^2
Each side	0.19	m

Use 190 mm square sides

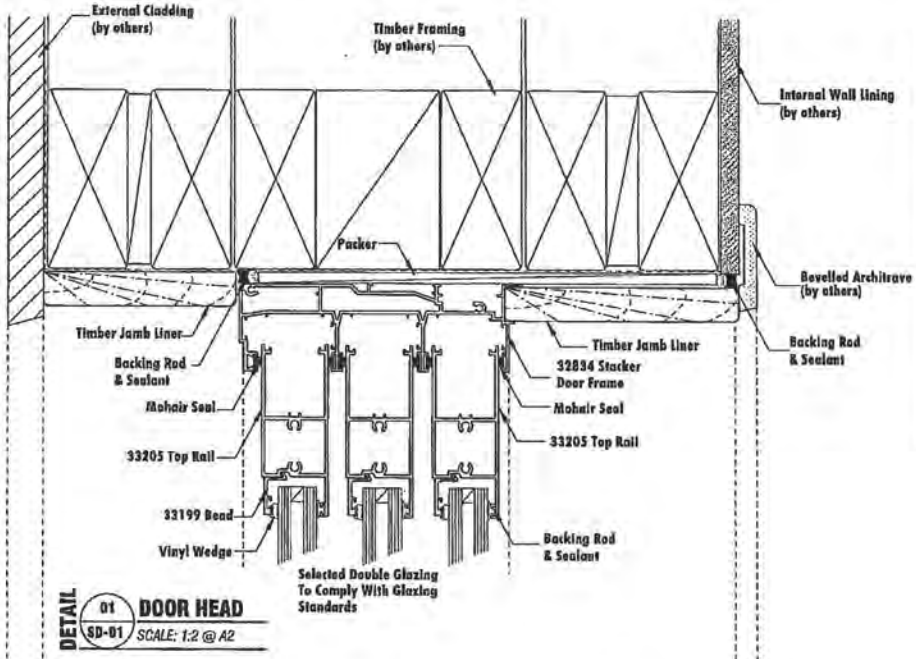

DETAIL 01 SD-01 **DOOR HEAD**
SCALE: 1:2 @ A2

OUTSIDE

INSIDE

DETAIL 02 SD-01 **DOOR SILL**
SCALE: 1:2 @ A2

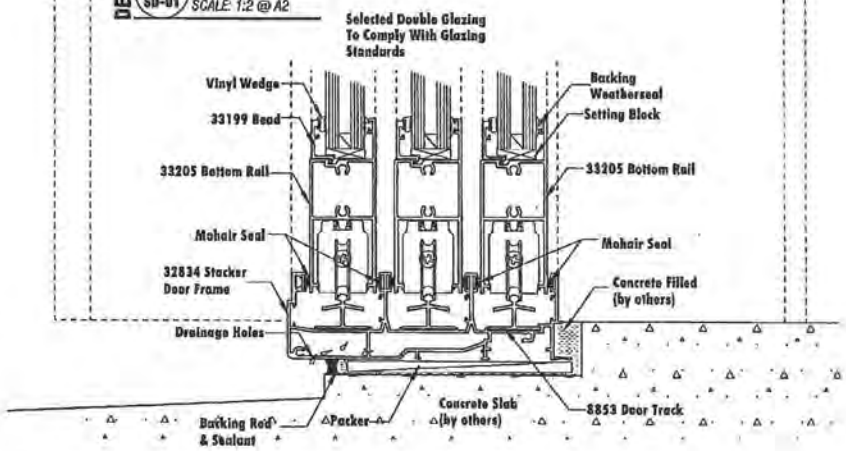

- TYPICAL ELEVATIONS -

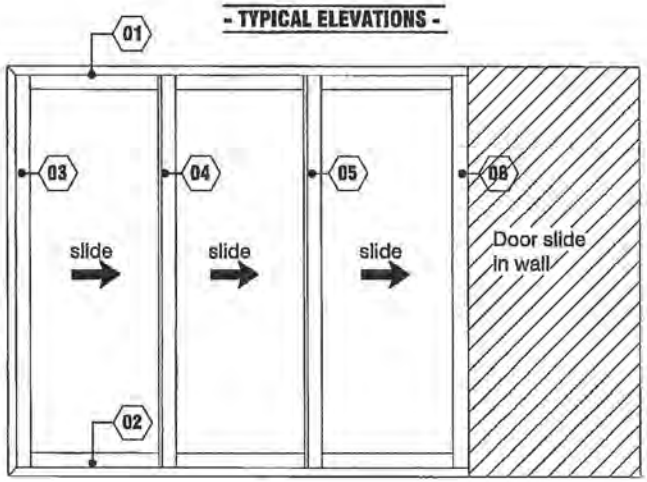

OMEGA Industries
22 Smart Road,
PO Box 326,
New Plymouth,
New Zealand.
Ph: +64 (6) 759 1740

Contract By:
OMEAG KAPITI

Project Name:

Drawing Title:
INSTALLATION DETAILS:
ROYALTY STACKER SLIDING
DOOR SUITE

Drawn: AKS	Date: 08/04/11
Scale: 1:2	Original Size: A2

Drawing Number:
SD - 01

Sheet Number: 01 of 02	Issue: -

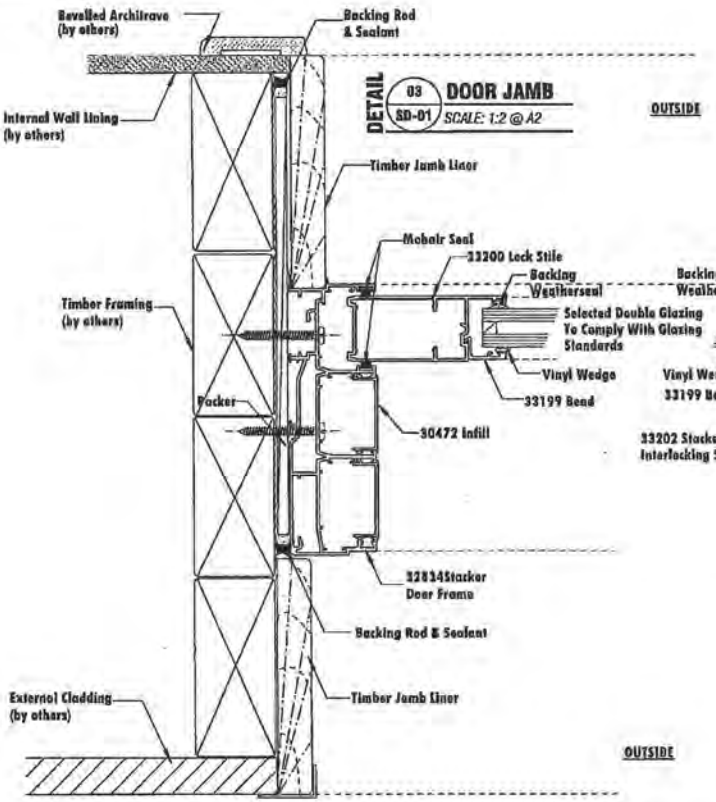

DETAIL 03 SD-01 **DOOR JAMB** SCALE: 1:2 @ A2

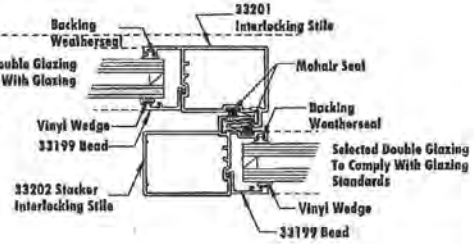

DETAIL 04 SD-01 **INRERLOCKING STILE** SCALE: 1:2 @ A2

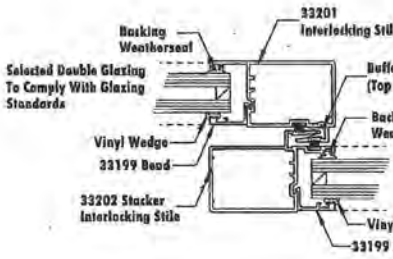

DETAIL 05 SD-01 **INRERLOCKING STILE** SCALE: 1:2 @ A2

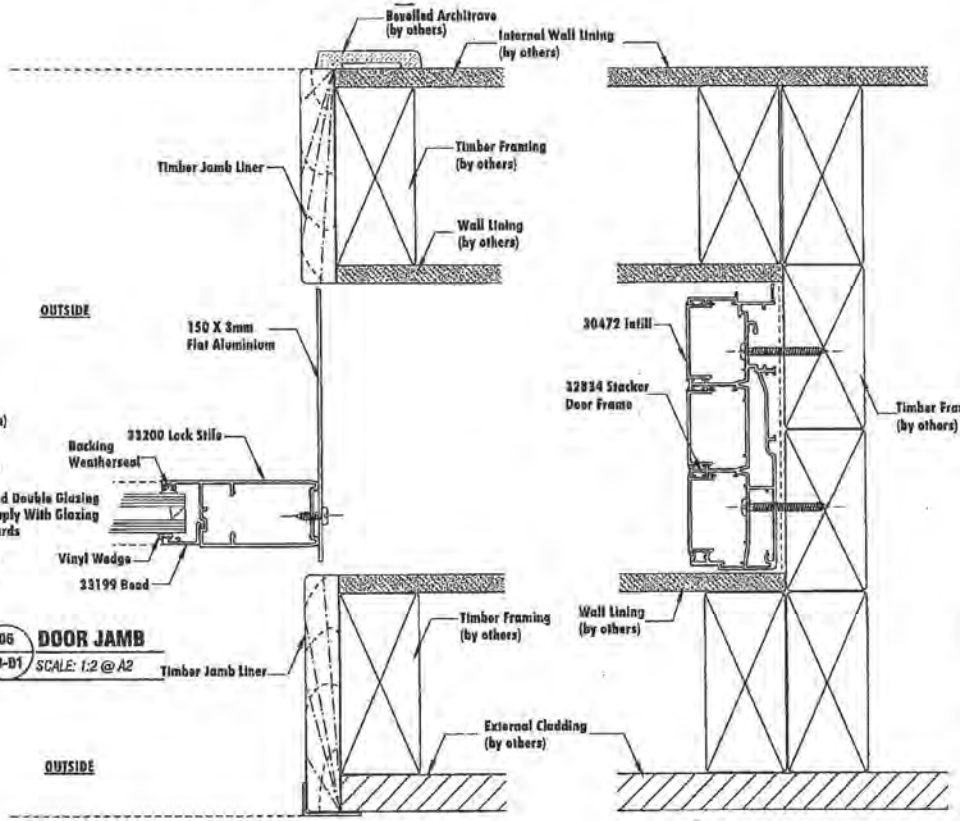

DETAIL 06 SD-01 **DOOR JAMB** SCALE: 1:2 @ A2

OMEGA Industries
22 Smart Road,
PO Box 326,
New Plymouth,
New Zealand.
Ph: +64 (6) 759 1740

Contract By:
OMEAG KAPITI

Project Name:

Drawing Title:
INSTALLATION DETAILS: ROYALTY STACKER SLIDING DOOR SUITE

Drawn: AKS	Date: 08/04/11
Scale: 1:2	Original Size: A2

Drawing Number:
SD - 02

Sheet Number: 02 of 02
Issue: -

Figure 128: Windows for EIFS on cavity
Paragraph 9.3.8 (b)

GENERAL: (a) Refer Figure 72 for wrapping of framed opening prior to window installation.
(b) Sliding and bi-fold windows will require specific design.
(c) A minimum of 8 mm effective cover at sills shall be permitted where necessary to allow for tolerances.

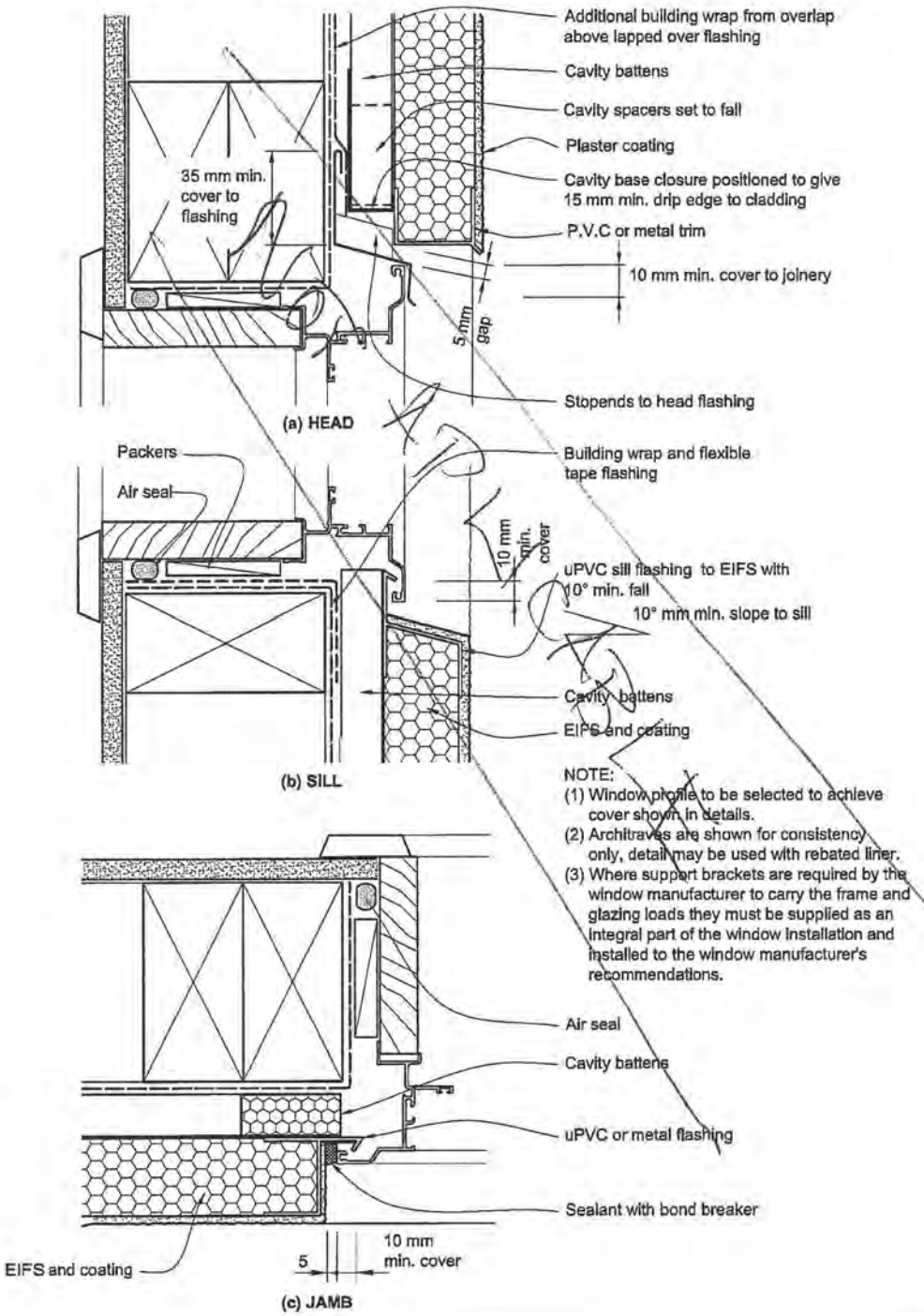

NOTE:
(1) Window profile to be selected to achieve cover shown in details.
(2) Architraves are shown for consistency only, detail may be used with rebated liner.
(3) Where support brackets are required by the window manufacturer to carry the frame and glazing loads they must be supplied as an integral part of the window installation and installed to the window manufacturer's recommendations.

Amend 2 Jul 2005

Figure 36: Eaves and barge for metal tile
Paragraph 8.3.8

Note: (1) Z = variable according to *wind zone* – refer Table 7.
(2) If alternate barge *flashing* profiles are used, these profiles must achieve equivalent covers.

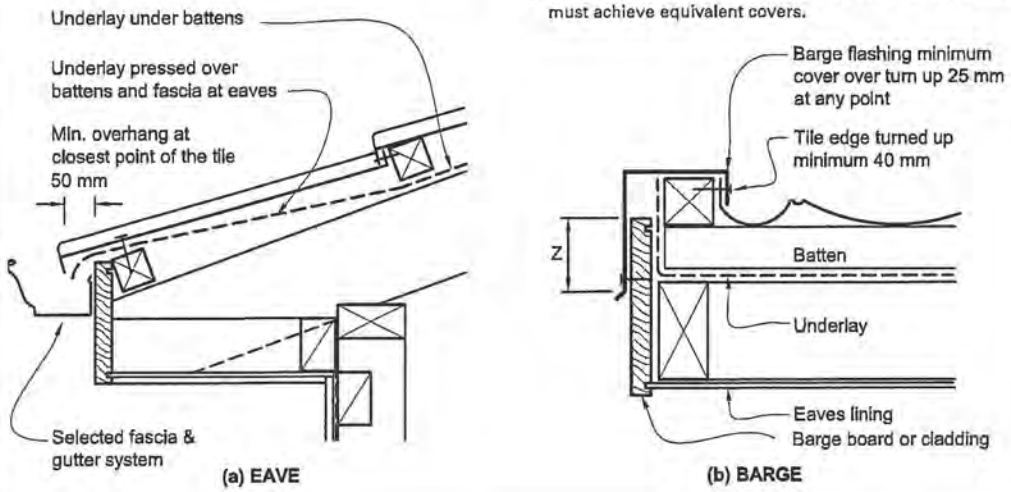

Amend 2 Jul 2005

Figure 37: Hidden and valley gutter flashings for metal tile
Paragraphs 8.3.1 and 8.3.8

NOTE: (1) Refer to Table 8 for maximum roof catchment areas for *valley gutters*.
(2) Minimum width of *valley gutter* may reduce to 160 mm, providing roof catchment area is in accordance with Table 8. In this case, cover of tiles over gutter shall be reduced to 60 mm to provide a clearance between tiles of 40 mm.

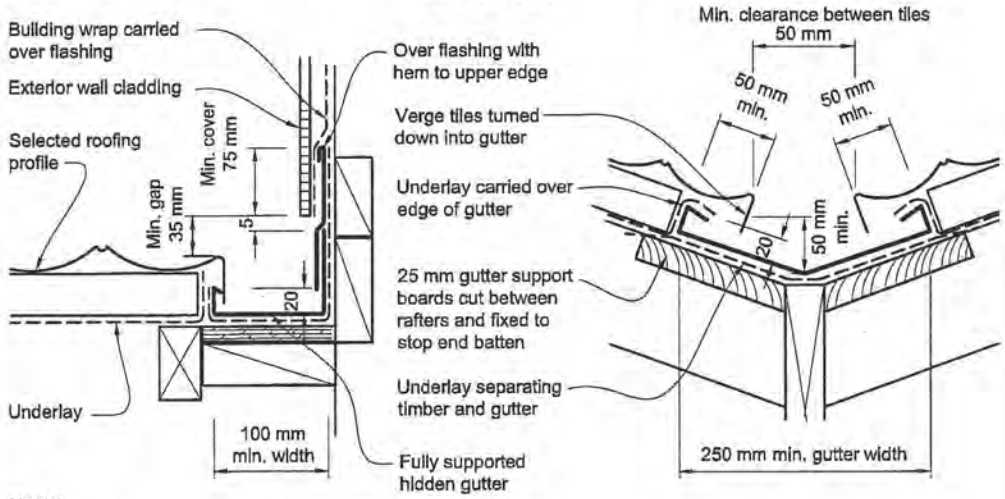

NOTE:
Where gutter finishes within the length of the wall, step lower part of gutter out to 10 mm past the *cladding* line, while maintaining required clearances, to allow the gutter to feed into the lower *eaves* gutter.

(a) PARALLEL HIDDEN GUTTER (b) VALLEY GUTTER

Amend 2 Jul 2005

Multi-fuel chimneys, twin wall, mineral wool or air gap insulation Therminox

Therminox TI and ZI flues are suitable for the evacuation of fumes from any gas, oil, wood and coal-fired atmospheric appliances. With seal they can also be used under positive pressure.

Incorporating a 30 mm thick insulation of high-density pressure injected mineral fibre, these twin wall stainless steel or stainless/aluzinc+ steel chimneys are now CE marked in compliance with EN 1856-1.

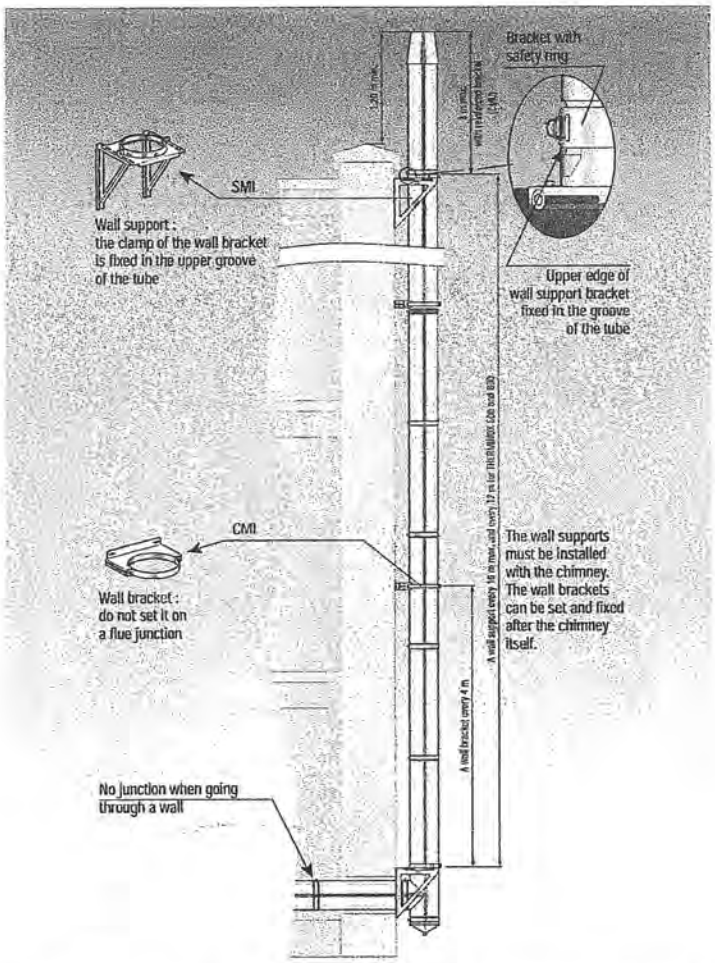

For gas boilers, we also offer :

- Therminox TR,
- Therminox ZR,

where the insulation is ensured by an air gap between the walls.

External appearance :

- RAL colour finishes available.
- Non overlapping locking band integrated in the diameter.

Safety :

- Stainless steel 316L inner wall.

Detailed sketch of the product

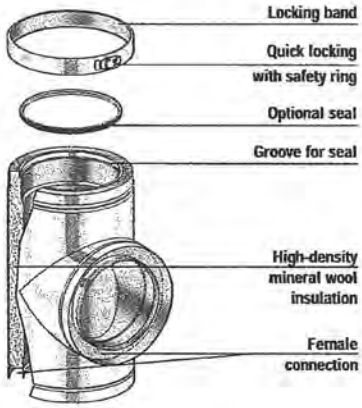

2004 the European Standard EN 1856-1 "Requirements for metal chimneys, Part 1 : System chimney products" was published. The table below shows the designations of the Therminox range, according to this standard. Do not hesitate to contact us if you have any questions about this standard.
CHIMNEY EN 1856-1 : Cert. 0071-CPD-0011 (TI/ZI) and 0012 (TR/ZR).

CE 0071	Normal operating temperature	Pressure level N1 : negative pressure P1 : positive pressure (up to 200 Pa)	Resistance to condensate W = wet (condensation)	Corrosion resistance Inner wall material V2L50 = Mat. Nr 1.4404 (AISI 316L) VmL20 = Mat. Nr 1.4301 (AISI 304)	Inner wall thickness 0.4 mm	Thermal performance G : sootfire resistant Distance to combustible mat. 50 mm min. O : not for sootfire resistant use Distance to combustible mat. 20 mm min.
TI/ZI without seal	450 °C	N1	W	V2L50	040	G 50
TI/ZI without seal	250 °C	N1	W	V2L50	040	O 20*
TI/ZI with seal	250 °C	P1	W	V2L50	040	O 20
TR/ZR without seal	160 °C	N1	W	VmL20	040	O 20*
TR/ZR with seal	160 °C	P1	W	VmL20	040	O 20

* For horizontal use with condensates, even for negative pressure chimneys, use the silicone lip seal.

BC 110397

designscape
298 rosetta road raumati

00026

FOUNDATION SOIL : 35b KOTARE STREET

The soil is clay soil, soft for about 700mm, then good ground as defined in NZS 3604.

The profile is the section is on the side of a hill, with a sealed access above the site channelling the surface water away. The site will be cut to form a level platform, and involves s small area of soft ground to be removed, and replaced with site fill (compacted).

The cut faces are being retained with engineered retaining walls. The walls effectively cut any subsurface water to the building platform, and this water is caught in the subsoil drains.

Fill and slab construction is under the control of the engineer.

BC 110397

RISK MATRIX SUMMARY

Client: **Ward house**
Address: 35B Kotare St
Job # 2690-01

Designscape
298 Rosetta Rd
Phone 04-902-8528

see plans for location of elevations

	Elevation 1		Elevation 2		Elevation 3		Elevation 4	
Wind Zone per NZS 3604	very high	2	very high	2	very high	2	very high	2
Number of Storeys	low	0	low	0	low	0	low	0
Roof/wall Intersection	low	0	low	0	low	0	low	0
Eaves width	high	3	high	3	high	3	high	3
Envelope complexity	medium	1	medium	1	medium	1	medium	1
Deck design	low	0	low	0	low	0	low	0
TOTALS		**6**		**6**		**6**		**6**
Cladding 1	EIFS		EIFS		EIFS		EIFS	
Fixing 1	~~Direct fixed~~		~~Direct fixed~~		~~Direct fixed~~		~~Direct fixed~~	
Cladding 2	Not applicable		Not applicable		Not applicable		Not applicable	
Fixing 2	Not applicable		Not applicable		Not applicable		Not applicable	

although direct fixed is shown ok cladding will be on cavity as per manufactures specifications

SOLATUBE
Innovation in Daylighting

Online Ordering Login | About Us | Media Resources | Contact Us

Homeowner

What Is Daylighting? Room Gallery Product Catalog What People Are Saying

Home > Homeowner

-- Select City -- GO

How Does it Work?
Learn More about Solatube Daylighting Systems and how they can brighten every room in the home.

Before & After Photo Gallery
Visit our Before & After Gallery and see for yourself how a Solatube Daylighting System can brighten any room.

Sign up for specials and promotions
Name:
Email: Subscribe

Search:
Search
powered by Google

Sitemap

Solatube New Zealand | HomeTech Ltd| 0800 HOMETECH (466 383) |
From overseas: +64 4 568 3232

hometech facebook

© HomeTech Ltd
Trademarks | Privacy Policy

RECEIVED
00023

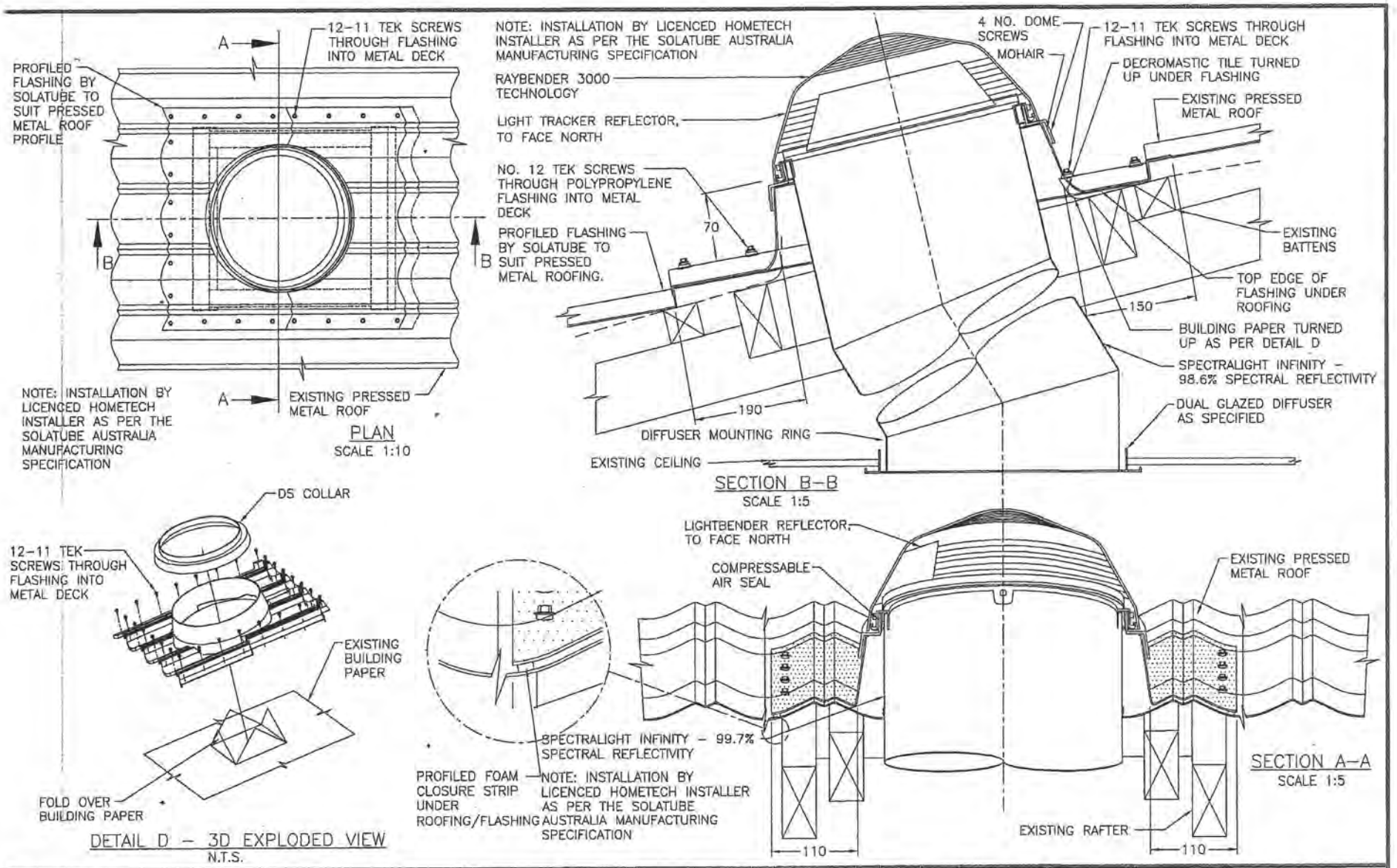

HOMETECH
HEALTHY HOME SOLUTIONS
PHONE: 0800 466-383
WEB: www.solatube.co.nz

SOLATUBE.
Innovation in Daylighting.
Copyright Trademarks and Patents registered.
Authorised Distributor HomeTech Limited New Zealand.

SOLATUBE 290DS (350ø) TUBULAR DAYLIGHTING DEVICE (TDD)
INSTALLATION FOR PRESSED METAL ROOF e.g. DECROBOND

INSTALLATION: INSTALLED BY A LICENCED HOMETECH INSTALLER AS PER THE SOLATUBE AUSTRALIA MANUFACTURING SPECIFICATION

© 2009 HomeTech Ltd

DRAWN	PCR	REVISION	B
DATE	25/9/09	SCALE	1:5,1:10,NTS
APPROVED	PN	DWG NO.	290DS-D
DATE	25/9/05		

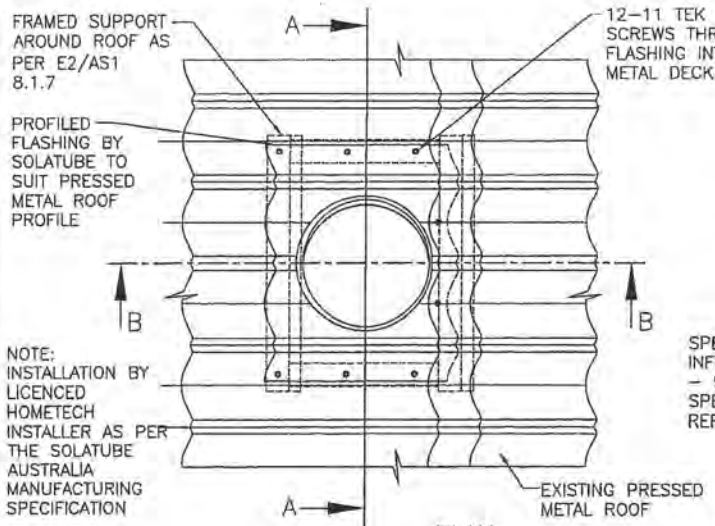

PLAN
SCALE 1:10

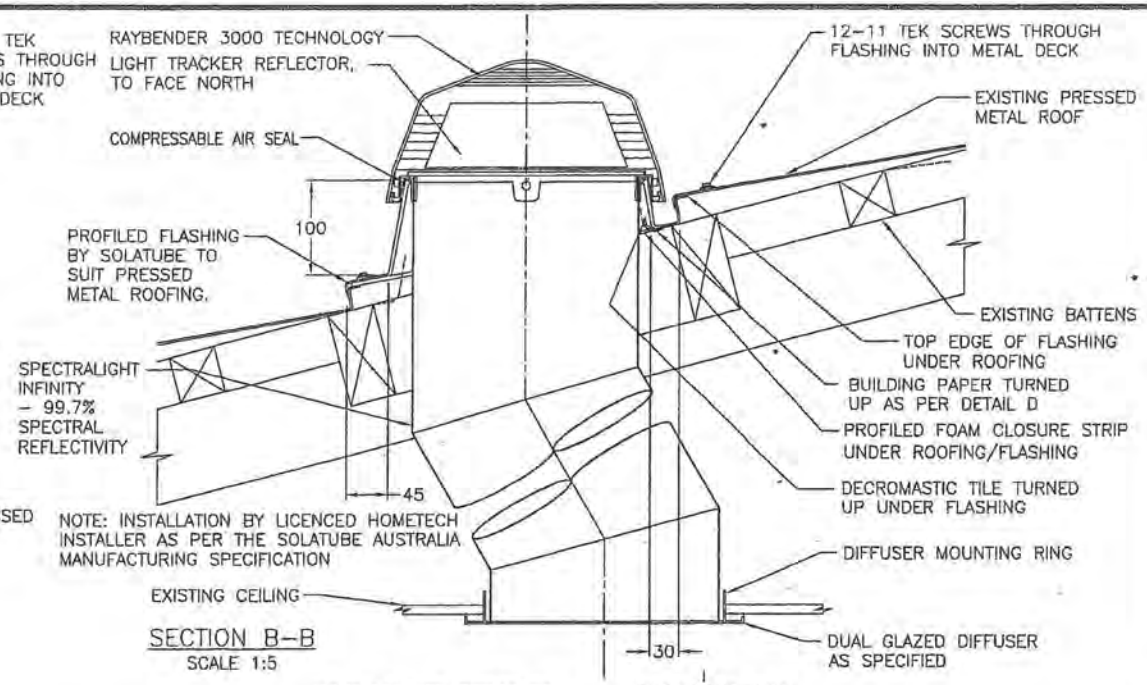

SECTION B-B
SCALE 1:5

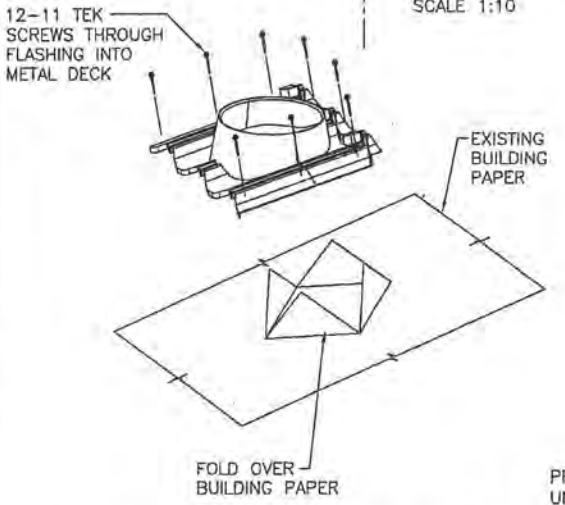

DETAIL D - 3D EXPLODED VIEW
N.T.S.

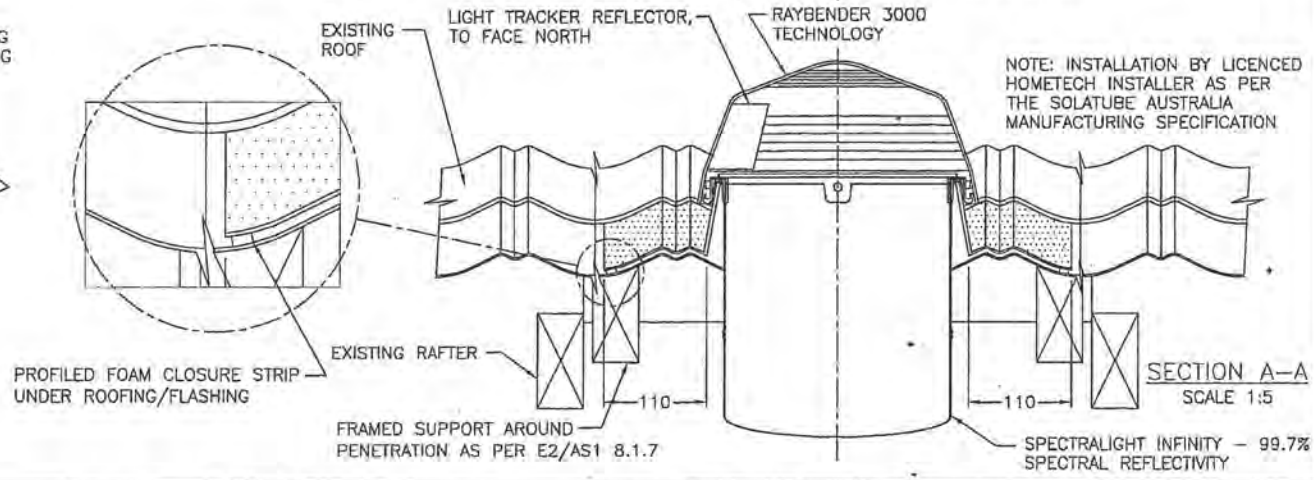

SECTION A-A
SCALE 1:5

HOMETECH
HEALTHY HOME SOLUTIONS
PHONE: 0800 466-383
WEB: www.solatube.co.nz

SOLATUBE.
Innovation in Daylighting.
Copyright Trademarks and Patents registered.
Authorised Distributor HomeTech Limited: New Zealand.

SOLATUBE 160DS (250ø) TUBULAR DAYLIGHTING DEVICE (TDD)
INSTALLATION FOR PRESSED METAL ROOF e.g. DECROBOND

INSTALLATION: INSTALLED BY A LICENCED HOMETECH INSTALLER AS PER THE SOLATUBE AUSTRALIA MANUFACTURING SPECIFICATION

© 2009 HomeTech Ltd

DRAWN	PCR	REVISION	A
DATE	15/09/09	SCALE	1:5,1:10,NTS
APPROVED	PN	DWG NO.	160DS-D
DATE	15/09/09		

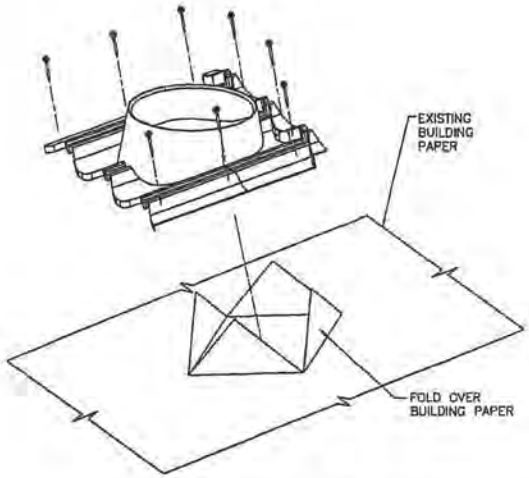

DETAIL D – 3D EXPLODED VIEW
N.T.S.

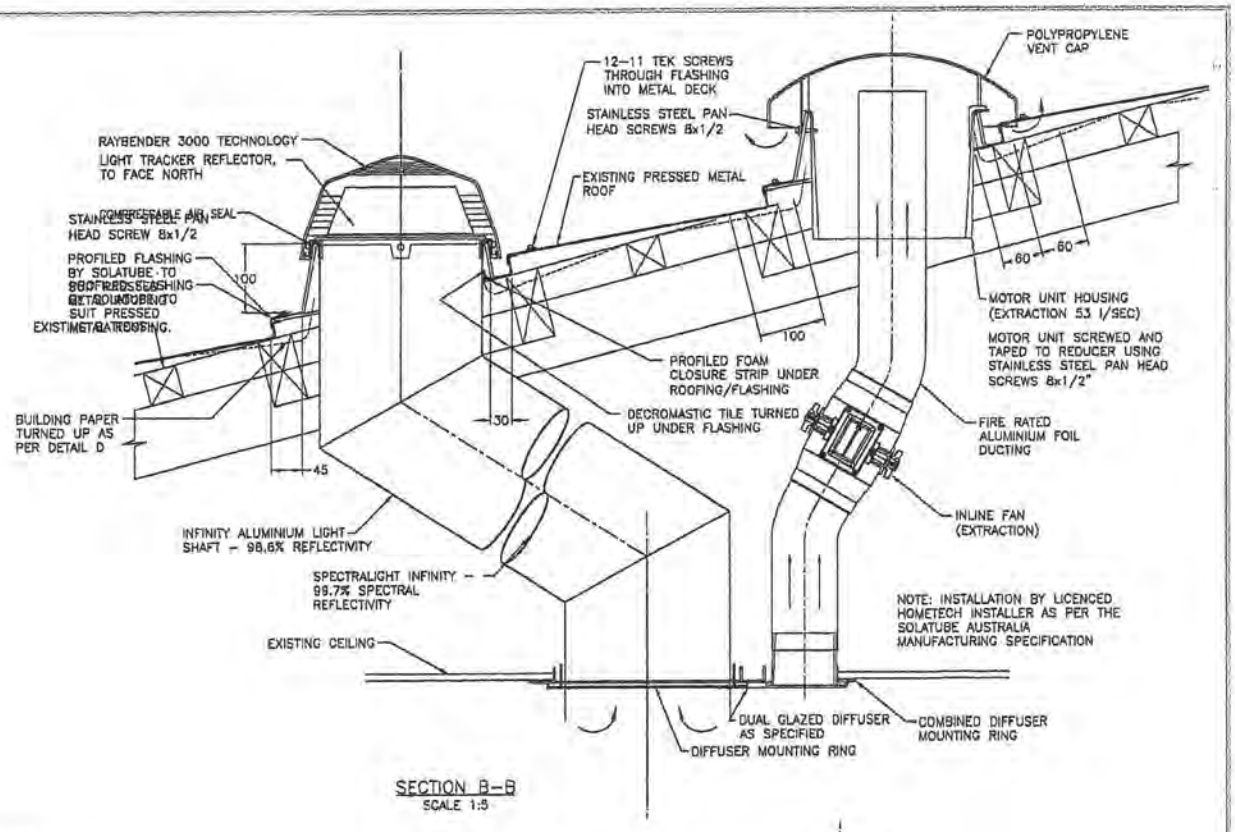

SECTION B–B
SCALE 1:5

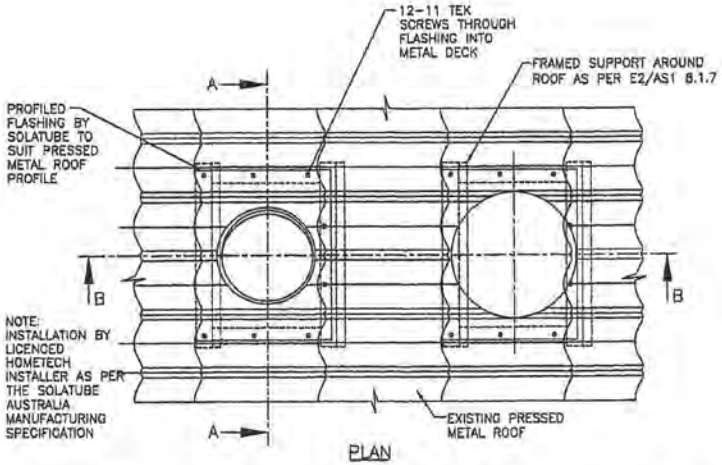

PLAN

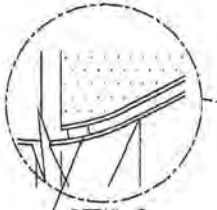

DETAIL C
N.T.S.

PROFILED FOAM CLOSURE STRIP UNDER ROOFING/FLASHING

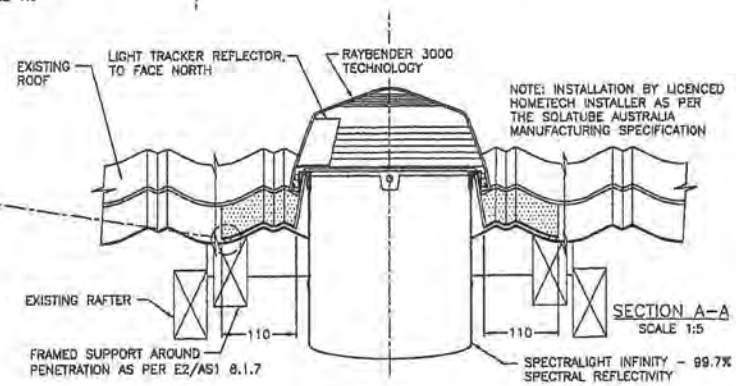

SECTION A–A
SCALE 1:5

HOMETECH
HEALTHY HOME SOLUTIONS
PHONE: 0800 466-383
WEB: www.solatube.co.nz

SOLATUBE.
Innovation In Daylighting.

SOLATUBE 160DS VENTED (250MM) TUBULAR DAYLIGHTING DEVICE (TDD)
INSTALLATION FOR PRESSED METAL ROOF e.g. DECROBOND

INSTALLATION: INSTALLED BY A LICENCED HOMETECH INSTALLER AS PER THE SOLATUBE AUSTRALIA MANUFACTURING SPECIFICATION

© 2005 HomeTech Ltd

DRAWN	PCR	REVISION	A
DATE	20/10/09	SCALE	1:5,1:10,NTS
APPROVED	PN	DWG NO.	160DS-V-D
DATE	20/10/09		

Linea Quattro™ | essential structure and connections

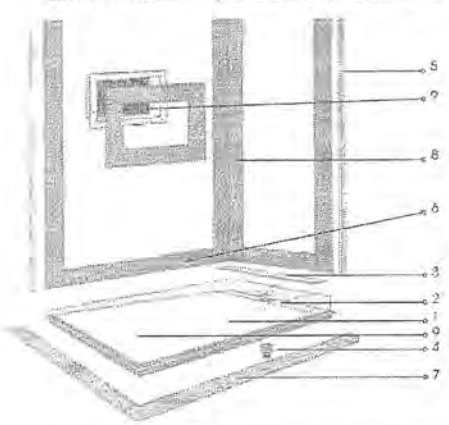

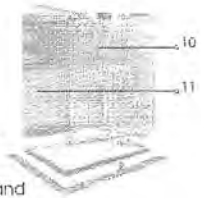

1. Shower base
2. Channel drain
3. Stainless steel drain cover
4. Waste outlet (40mm / 50mm)
5. Glazing channels
6. Base to wall reinforcement band
7. Base to floor reinforcement band
8. Corner connection band
9. (Optional) EasyNiche™ accessory
10. Fully frameless screen (& hardware)
11. (Optional) Atlantis self-adhesive sheet membrane for the full shower wall area.

Waterproofing

The 100% waterproof Atlantis shower base and connections are compliant with the requirements of the New Zealand Building Code.

The shower system is compatible with any compliant waterproofing membrane used on the walls and for the rest of the bathroom floor.

1. Shower base
2. Channel drain and stainless steel cover
3. Waste outlet
4. Glazing channels
5. Corner reinforcement band
6. Reinforcement band connections
7. Adhesion layer
8. (Optional) EasyNiche™ accessory
9. Liquid waterproofing (by others).

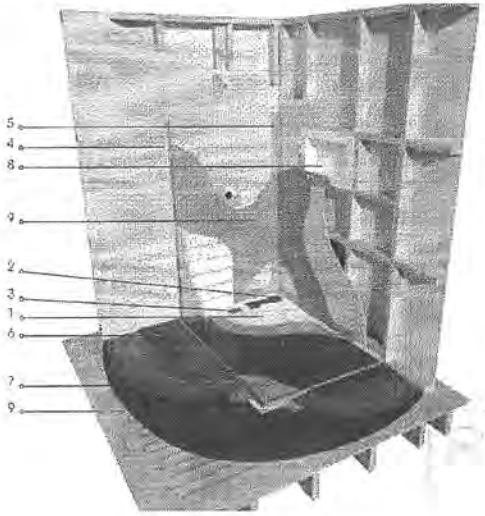

SHOWER BASE

- Structurally solid pre-formed base made of laminated GRP material – already 100% waterproof.
- Ready-to-tile gelcoat surface – accepts a wide range of (specified) cement-based tile adhesives.
- No structural alterations to (timber) floor required (where fall slide is less than 1600mm).
- Base support structure for level placement on floor or bedding into a concrete slurry.
- Can also be installed to achieve low-step entry on any existing floor.
- Minimum 70mm high upstand - for secure connection to wall membrane.
- Factory-fitted glass receiver channels on base
- Guaranteed fall (1:80) to waste.
- Single plane to channel drain surface accepts tiles up to 12mm thick (standard).
- Thicker tiles can be accommodated by special request
- Base underside adhesive supplied (for fixing to floor).
- Weight: 16kg/m².

CHANNEL DRAIN & WASTE

- Integral channel drain located at side (for 2 and 3½ walled showers) and at side or back (for 3-walled)showers.
- 40mm direct flow vertical waste outlet.
- Maximum flow rate 40 litres per minute.
- Stainless steel drain in optional polished (standard) or brushed finish.

WATERPROOFING

ESSENTIAL (Standard): Atlantis self-adhesive reinforcement band is supplied for internal corner(s), floor and wall connection.

- Compatible with any compliant liquid waterproofing membranes.

FULL MEMBRANE: Atlantis self-adhesive APM-WM sheet membrane for shower wall can be supplied as an upgrade option.

- Optimum controlled 1mm thickness.
- Applied membrane immediately ready for tiling
- Building Code compliant (AS 3740-2004). (BRANZ appraisal certificate on request).
- 15-year product durability warranty.

BASE PROFILE INTO CONCRETE FLOOR RECESS

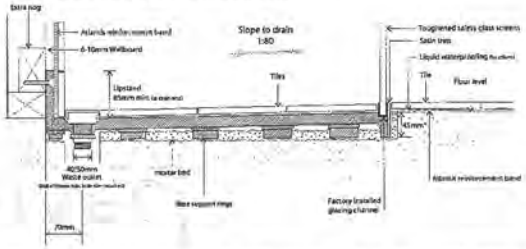

PRECISION-FIT NAKED FRAMELESS SCREENS

- 8mm toughened safety glass screens.
- Hinged door option complete with chrome/stainless steel handles, solid brass hinges and fixing materials.
- Sliding door option complete with stainless steel handles, roller assemblies and installation materials.
- Walk-in fixed panel options available in most sizes.
- Satin anodised wall glass receiver channels incorporate mechanical glass locking system and are machined to lock with base channels.
- High strength aluminium top rail brace at 2000mm high above base.
- Screens supplied at 2120mm overall height.
- 5-year durability warranty (screens).
- Supplied with cristalcote glass cleaner and surface protector (for after-purchase application)

EASYNICHE™ PRODUCT SHELF

- One-piece unit made of GRP composite.
- Already 100% waterproof
- Fits into 90mm wall cavity.
- Available in 10 sizes including footrest
- Supplied with self-adhesive reinforcement band for connection to wall
- Compatible with all wet area boards
- 25-year product warranty.

Illustration of 2-walled shower showing Linea Quattro™ base and fully enclosed H2 screens (hinged door) option

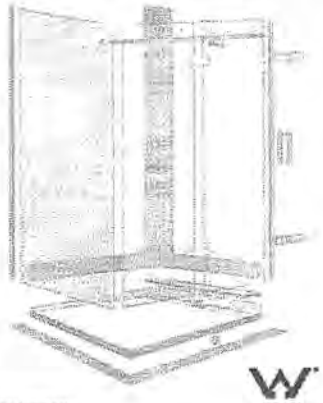

Specifications subject to change without notice. Please check **www.atlantis.net.nz** for latest version.

00022

NOCCHI
Pentair Water

PUMPING SUPPLIES & INSTALLATIONS LTD
461 Jackson St, Petone
Wellington 5012
T: 04 568 7482 F: 04 568 4860
info@pumpingsupplies.co.nz

MCX

MULTISTAGE CENTRIFUGAL PUMPS

The MCX series horizontal multistage centrifugal pumps offer the following benefits:
- High hydraulic pressure and flow rate performance
- Minimum electrical energy consumption
- Extremely silent operation

Applications

- Pumping and distribution of water in domestic systems
- Booster systems
- Firefighting systems
- Washing systems, irrigation

Usage limitations

- Type of liquid: clean water with no suspended solids or abrasive material
- Maximum liquid temperature 50°C
- Maximum recommended suction height 6 m with foot valve
- Maximum operating pressure 7 bar

Motor

- Enclosed, externally ventilated
- Level of protection IP 44
- Class F insulation
- Single phase power supply with capacitor permanently activated and thermal protection built into the motor winding
- Three phase power supply with external protection provided by the user
- Speed of rotation 2850 rpm
- Suitable for continuous use

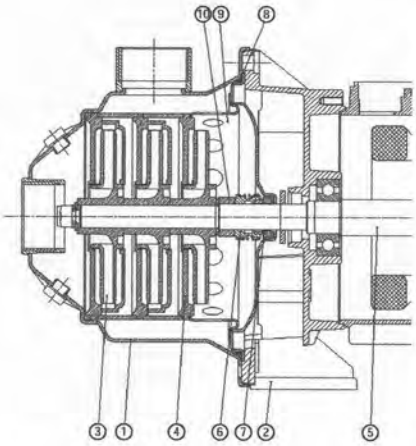

DESIGN FEATURES

	Component	Material
1	Pump casing	X5 CrNi 1810 (AISI 304) Stainless steel
2	Motor bracket	Die-cast aluminium
3	Impeller	Technopolymer with X5 CrNi 1810 (AISI 304) stainless steel shim ring
4	Diffusors	Technopolymer
5	Shaft (hydraulic end)	X5 CrNi 1810 (AISI 304) Stainless steel
6	Mechanical seal	Graphite
7	Counterface	Ceramic
8	O'ring	NBR 70 shore
9	Seal holder plate	GNF 2V Noryl (stainless steel on 200 Lt version)
10	Spacer (on 200 Lt)	X10 CrNiS 1809 (AISI 303) Stainless steel

PUMPING SUPPLIES & INSTALLATIONS LTD
461 Jackson St, Petone
Wellington 5012
T: 04 568 7482 F: 04 568 4860
info@pumpingsupplies.co.nz

TABLE OF HYDRAULIC PERFORMANCE

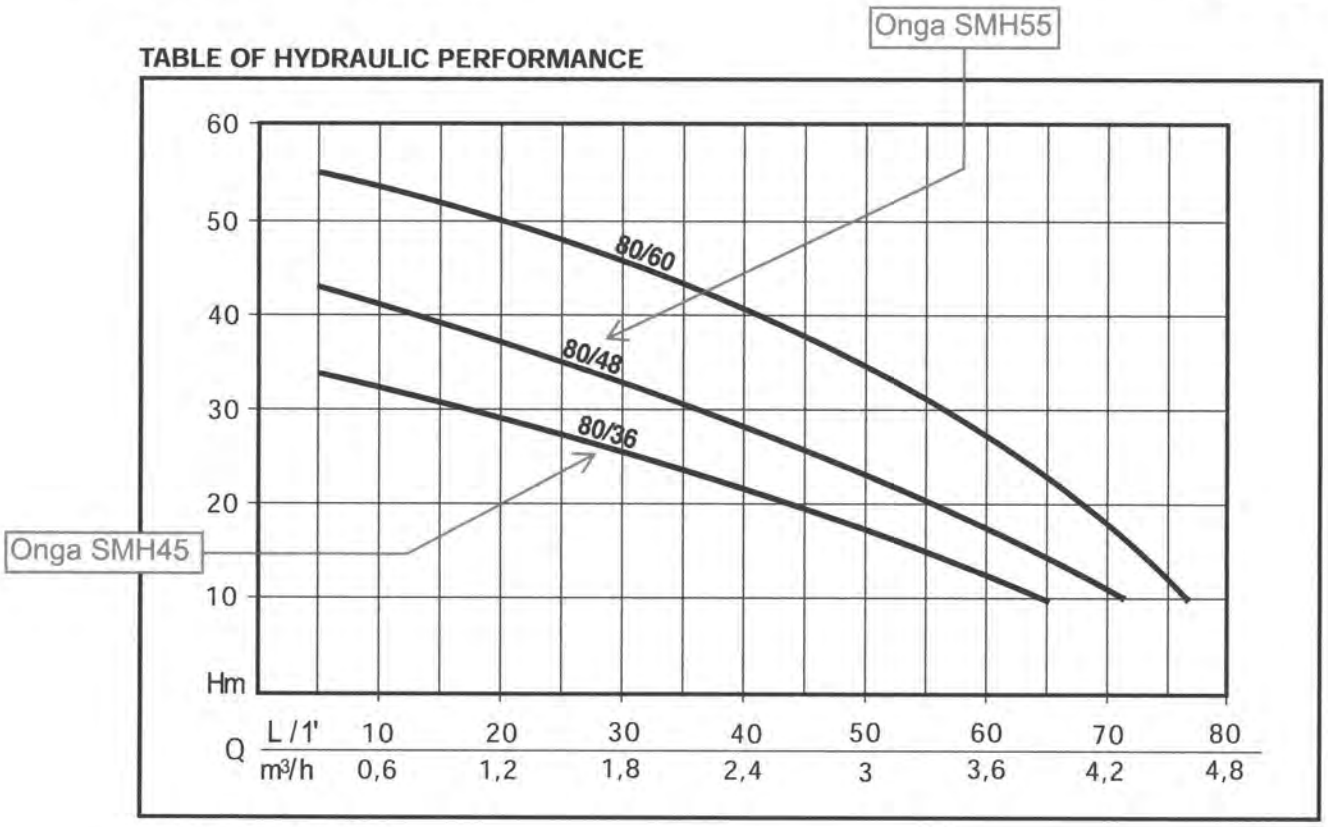

PUMP PERFORMANCE

CODE	MODEL	Nominal Power HP	Nominal Power kW	Absorbed Power HP	Absorbed Power kW	VOLTAGE	Amp.	µF.	Q L/1	0	20	40	60	80
									m³/	0	1,2	2,4	3,6	4,8
N4201180-B N4201240-B	MCX 80/36 M MCX 80/36 T	0,6	0,45	0,8	0,6	1 ~ 230 V 3 ~ 230 ÷ 400 V	2,9 2-1,2	12,5	Discharge head in meters	35	28	21	13	0,5
N4201190-B N4201250-B	MCX 80/48 M MCX 80/48 T	0,75	0,55	1,1	0,8	1 ~ 230 V 3 ~ 230 ÷ 400 V	4 2,6-1,5	12,5		45	36	28	17	1
N4201200-B N4201260-B	MCX 80/60 M MCX 80/60 T	1	0,75	1,3	1	1 ~ 230 V 3 ~ 230 ÷ 400 V	4,8 2,9-1,7	16		57	50	40	27	3

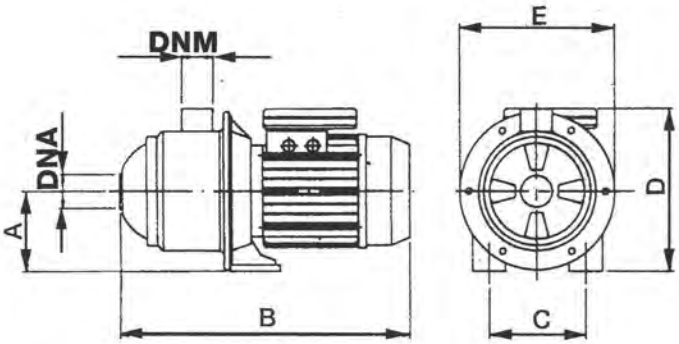

TABLE OF SIZES AND WEIGHTS

Model	Dimensions mm.							Weight
	A	B	C	D	E	DNA	DNM	kg
MCX 80/36	90	296	99	190	174	1"	1"	6
MCX 80/48	90	318	99	190	174	1"	1"	7
MCX 80/60	90	360	99	195	174	1"	1"	8

PUMPING SUPPLIES & INSTALLATIONS LTD
461 Jackson St, Petone
Wellington 5012
T: 04 568 7482 F: 04 568 4860
info@pumpingsupplies.co.nz

TABLE OF HYDRAULIC PERFORMANCE

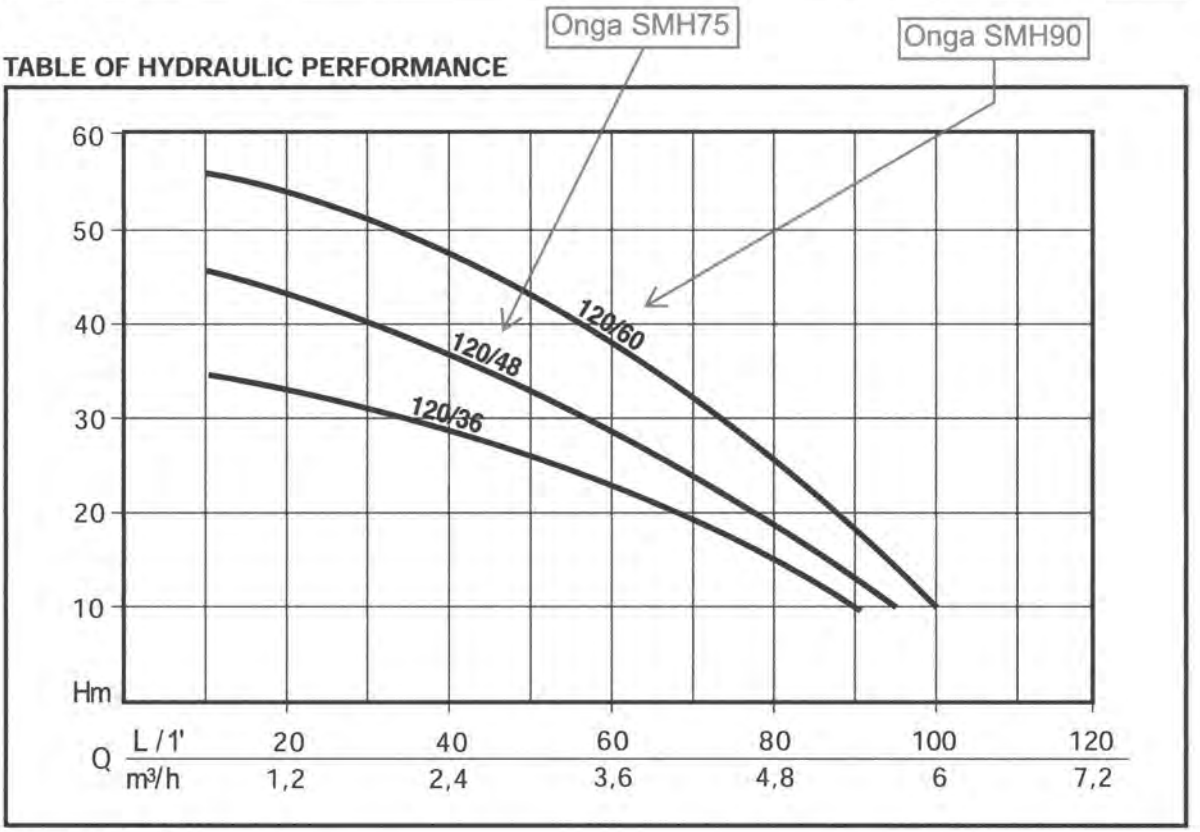

PUMP PERFORMANCE

CODE	MODEL	Nominal Power HP	Nominal Power kW	Absorbed Power HP	Absorbed Power kW	VOLTAGE	Amp.	µF.	Q L/1	0	20	40	60	80	100
									Q m³/	0	1,2	2,4	3,6	4,8	6
N4201210-B N4201270-B	MCX 120/36 M MCX 120/36 T	0,75	0,55	1,1	0,8	1 ~ 230 V 3 ~ 230 ÷ 400 V	3,5 2,9-1,7	12,5	Discharge head in meters	36	33	28	22	14	4
N4201220-B N4201280-B	MCX 120/48 M MCX 120/48 T	1	0,75	1,5	1,1	1 ~ 230 V 3 ~ 230 ÷ 400 V	4,6 3,6-2,1	16		48	42	37	27	18	5
N4201230-B N4201290-B	MCX 120/60 M MCX 120/60 T	1,2	0,9	1,7	1,25	1 ~ 230 V 3 ~ 230 ÷ 400 V	5,8 3,5-2	20		60	55	48	36	26	10

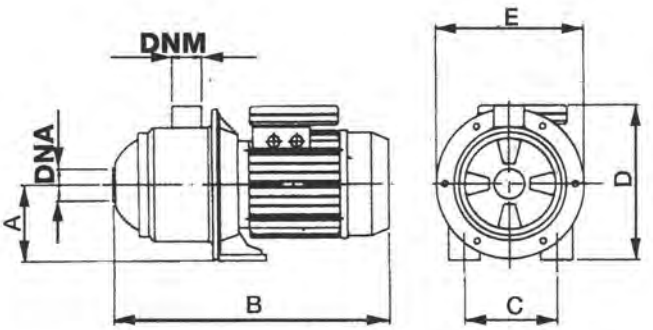

TABLE OF SIZES AND WEIGHTS

Model	Dimensions mm.							Weight
	A	B	C	D	E	DNA	DNM	kg
MCX 120/36	90	316	99	195	174	1"	1"	8
MCX 120/48	90	338	99	195	174	1"	1"	9
MCX 120/60	90	360	99	195	174	1"	1"	10

PUMPING SUPPLIES & INSTALLATIONS LTD
461 Jackson St, Petone
Wellington 5012
T: 04 568 7482 F: 04 568 4860
info@pumpingsupplies.co.nz

TABLE OF HYDRAULIC PERFORMANCE

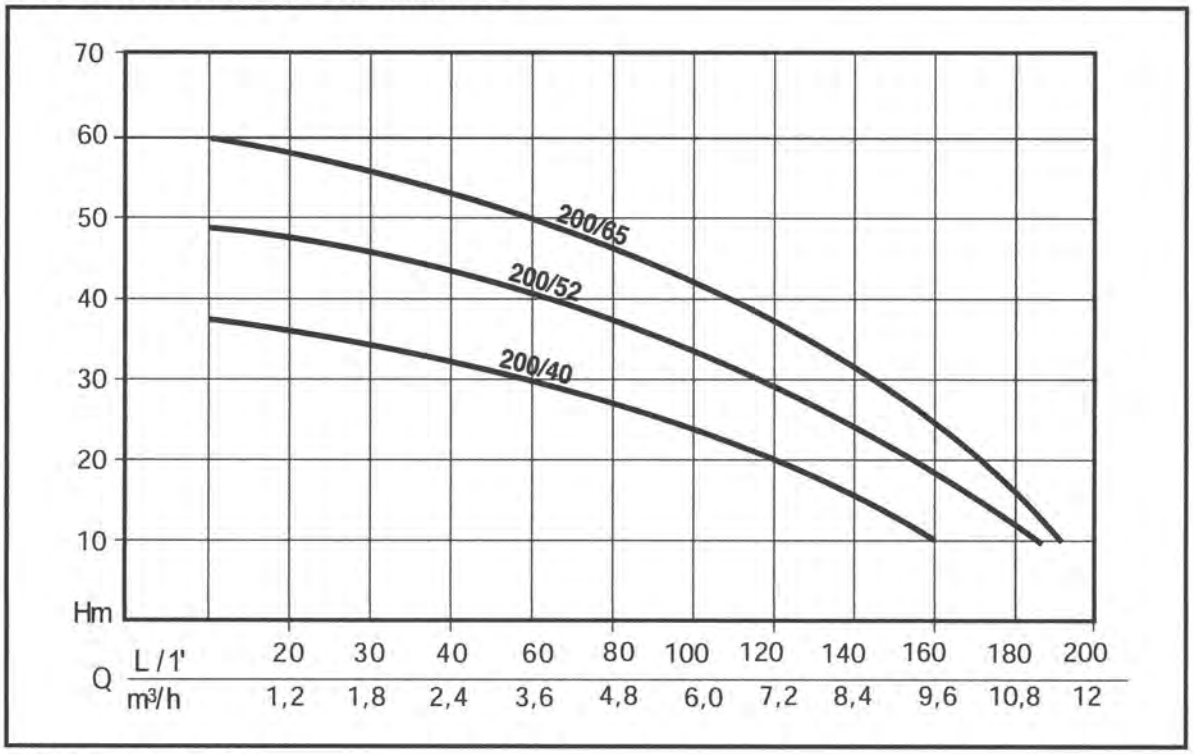

PUMP PERFORMANCE

CODE	MODEL	Nominal Power		Absorbed Power		VOLTAGE	Amp.	µF.	Q L/1'	0	20	40	80	120	160	200
		HP	kW	HP	kW				m³/h	0	1,2	2,4	4,8	7,2	9,6	12
N4201360-B N4201370-B	MCX 200/40 M MCX 200/40 T	1,5	1,1	2	1,5	1 ~ 230 V 3 ~ 230 ÷ 400 V	7 3,6-2,1	20	Discharge head in meters	38	35	32	26	19	11	
N4201380-B N4201390-B	MCX 200/52 M MCX 200/52 T	1,8	1,3	2,5	1,8	1 ~ 230 V 3 ~ 230 ÷ 400 V	8,5 5-2,9	25		49	47	44	38	29	18	3
N4201410-B N4201400-B	MCX 200/65 M MCX 200/65 T	1,9	1,4	2,7	2,0	1 ~ 230 V 3 ~ 230 ÷ 400 V	9 6-3,5	35		62	59	55	47	36	22	4

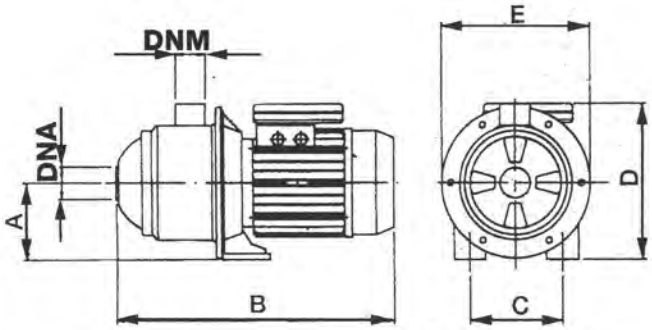

TABLE OF SIZES AND WEIGHTS

Model	Dimensions mm.							Weight
	A	B	C	D	E	DNA	DNM	kg
MCX 200/40	105	400	141	235	205	1" 1/4	1" 1/4	14
MCX 200/52	105	430	141	235	205	1" 1/4	1" 1/4	16
MCX 200/65	105	460	141	235	205	1" 1/4	1" 1/4	18

GHD CLIENTS|PEOPLE|PERFORMANCE

Calculations

GHD Limited

CLIENT:		JOB No:	5129748	SHEET:	of
JOB:		CALCS BY:	Co (PRINT NAME)	DATE:	16 FEB.
SUBJECT:	Azzuro CPC - stands.	CHECKED BY:	(PRINT NAME)	DATE:	

Brief:

To design an angle stand to support a solar panel. The stand is supported by 250x50 rafter. (Greenpeace project).

Design.

ASNZS 1664.1

Aluminium grade 6060T5.

GHD CLIENTS|PEOPLE|PERFORMANCE

Calculations

GHD Limited

CLIENT:	JOB No: 5129748	SHEET: 1 of
JOB:	CALCS BY: a (PRINT NAME)	DATE: 16 Feb
SUBJECT: A 22uRO CPC - Stands.	CHECKED BY: (PRINT NAME)	DATE:

Design angle to support Solar Panel.

P_{total} (P_T) = $P_1 + P_2$ (load from Solar Panel) — Solar panel.

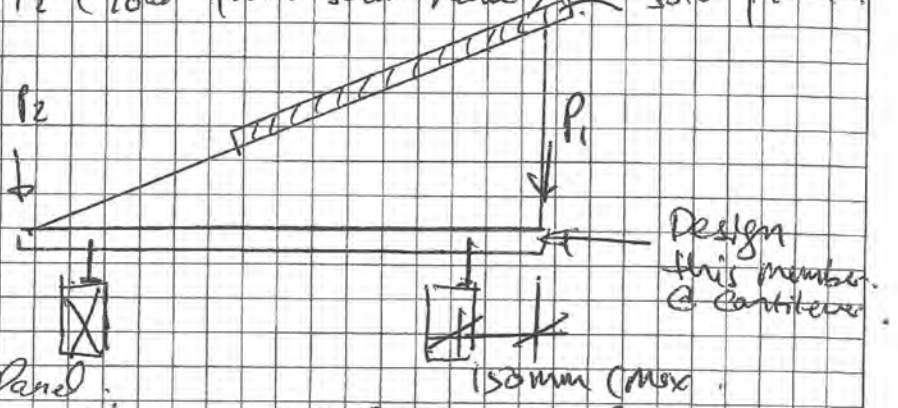

Loads from Solar Panel.

	CPC 6	CPC 12	CPC 18
P_T = 2 panel :	19kg x 2	37 x 2	58 x 2
3 panel	19kg x 3	37 x 3	58 x 3.

Point load in (kN) -

P_T = 2 panel	0.37kN	0.73 kN	1.04 kN
3 panel	0.56 kN	1.09 kN	1.60 kN

1.60 kN max point load from Solar panel

$P_1 = 0.6 \times P_T = 0.8 P_T$ (Arm)

$M^* = (0.6) \frac{1.6}{3} \times 1.2 \times 0.15 = 0.10$ kNm

(1.6 = P_T; 1.2 = Ult. Load factor)

Try 40 x 3 EA.

$Z_{xx} = 1.18 \times 10^3$ mm

$\phi M_u = 1.18 \times 10^3 \times 250 / 1000 = 0.295$ kNm OK

P_{Δ} Def = 0.04 mm - very small OK.

Adopt 40 x 3 EA - OK.

Check Rafter 50 X 250. Span 2.4m.
Assume Max Point load on 2.4m Rafter @ worst location.

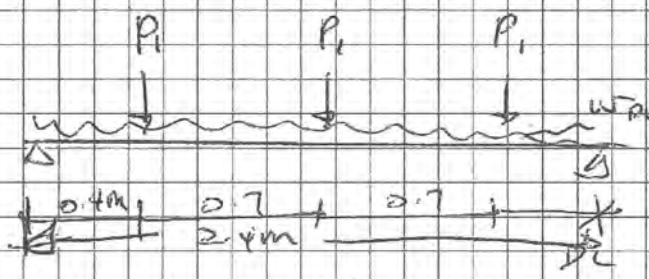

$w_{DL} = 1.2 \times 0.5 \times 0.84 = 0.504$ kN/m , 0.32 kN/m (ult)

$P_1 = \frac{1}{3} \times 0.6 \times 1.2 = 0.384$ kN (Point load).
Pg 1.

From Analysis $M^* = 0.6$ kNm. (See Page 5)

$\phi M_n = 3.7$ kNm (250 x 50 MGP 10) ∴ OK by inspection

Check wind load.

Wind load should be less critical because the structure actually adding more dead weight into the Rafter
Therefore by inspection wind load can be ignored in the Check.

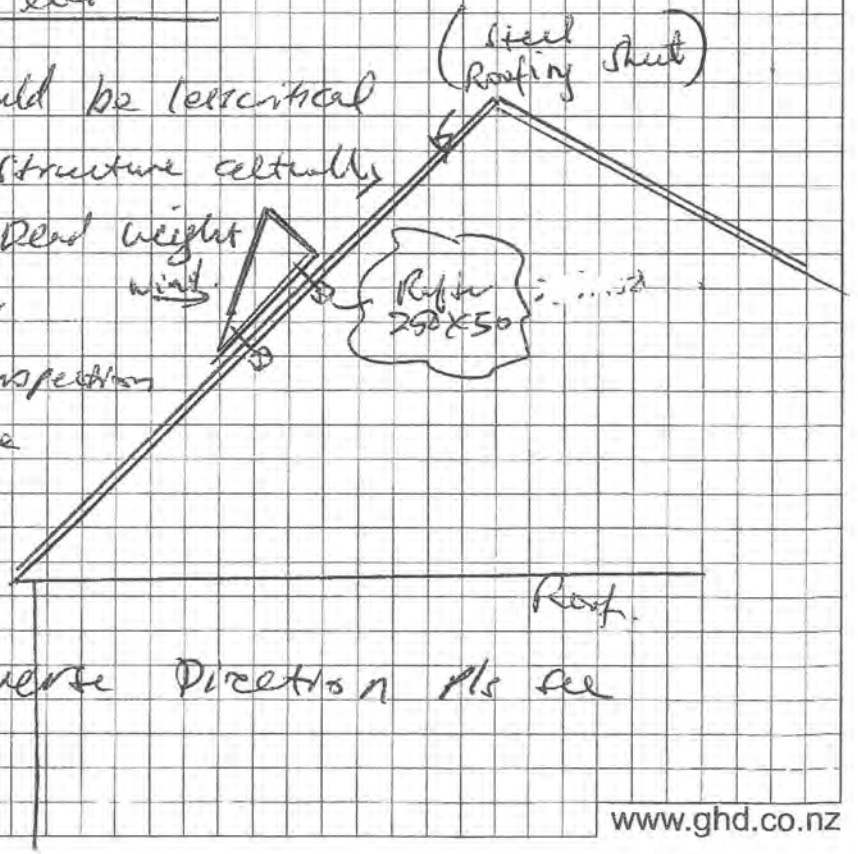

Wind on reverse Direction Pls see next Page.

GHD CLIENTS|PEOPLE|PERFORMANCE

Calculations

GHD Limited

CLIENT:		JOB No:	5129748.	SHEET:	3 of
JOB:		CALCS BY:	CO (PRINT NAME)	DATE:	17 Feb.
SUBJECT:	Azzuro CPC - Stands.	CHECKED BY:	(PRINT NAME)	DATE:	

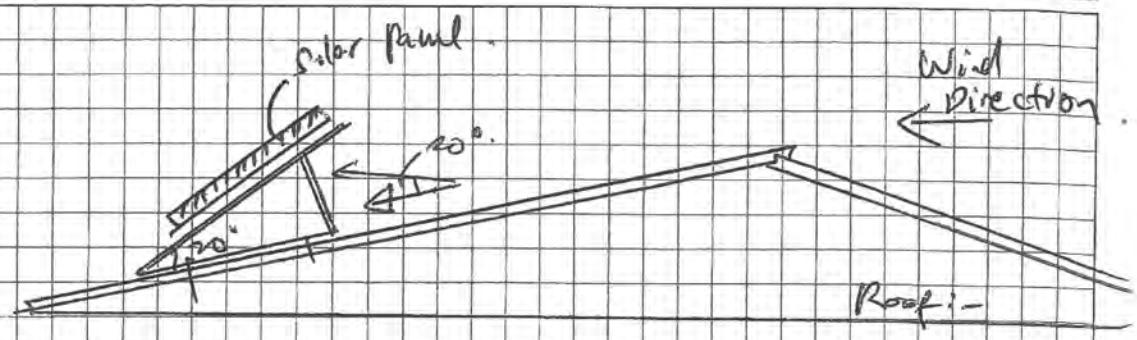

Windward is not issue.

Let Pressure of wind = 0.83 kpa

∴ Ke = 1.5. Roof Local Pressure.

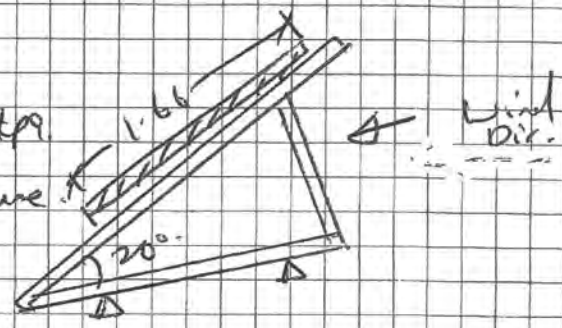

Wind Pressure. = 1.5 (Ke) × 0.83 kpa = 1.25 kpa.

Load on a single stand.

Stand width 0.7m
Length = 1.66m

Fx = 0.7m × 1.66 × 1.25 kpa = 1.45 kN.

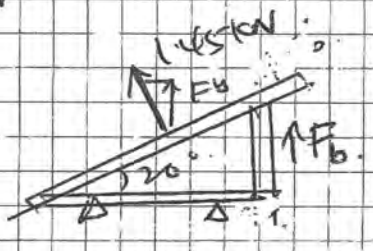

Fy = 1.45 kN × Cos 20°
= 1.36 kN.

Load on Fb = 0.6 Fy = 0.82 kN.

0.9G + Wind (Fb) = −0.9 × 0.38 + 0.82 = 0.48 kN ↑

By inspection the 40×3 EA is adequate.

M* = 0.5 kN × 0.15 = 0.07 kNm — very small.

Check Member "B"

$P^* = 0.38$ kN (Pg 2)

"B" = 612mm long (max).

Check mem. "B" for compression load.

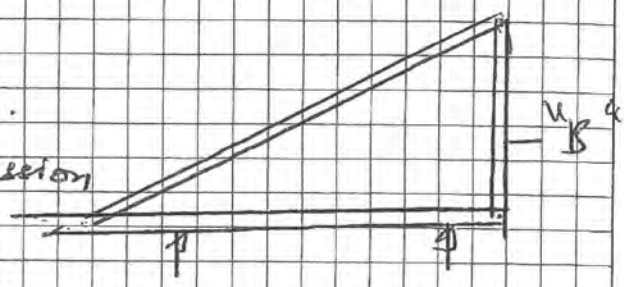

25 x 3 EA.

$\frac{L_e}{r} = 612\text{mm}/4.21 = 145.3$.

$\phi N_s = 9.1$ kN. >>> P^* ok.

M8 Bolts. By inspection ok. for the stands.

$\phi V = 6.7$ kN. >>> P^* ok. using M8 (4.6).

Try for "B" = 900mm.

$L_e/r = 900/4.21 = 213.7 > 200$.

$\phi N_s = ??$

Try 30 x 3 EA, $r_y = 5.25$.

$l/r_y = 900/5.25 = 171.4$.

$\phi N_s = 8.9$ kN >>> P^* ∴ ok.

Adopt 30x3 EA.

5129748 page 2.

Project :

Span	2.40	m
Left spt.	0	
Right spt.	0	

E	5.40E+06	kPa	1/250x50	
I	5.18E-05	m^4	Ix 5.18E+07	mm^4
EI	2.80E+02	kN.m2		

Mkz 0.6kNm

Load Type	Ultimate		Service	
Uniform	-0.82	0	-1.01	kNm
		0		
Conc. Loads:	Load(kN)			Position(m)
1	-0.38			0.4
2	-0.38			1.10
3	-0.38			1.80
4				
5				

Moment(Ult)=0.59kN.m @1.2m
Shear(Ult)=[-2.13,0.98]kN @ [0,2.4]m
Defln.(Ult)=1.26mm @ 1.2m , L/1904.8
Shear(Ult)=[-1.21,1.21]kN @ [0,2.4]m
Defln.(Serv)=1.56mm @1.2m L/1538.5

øMn=2.729 kN-m Use 250X50
Le=0.9 - Restrain

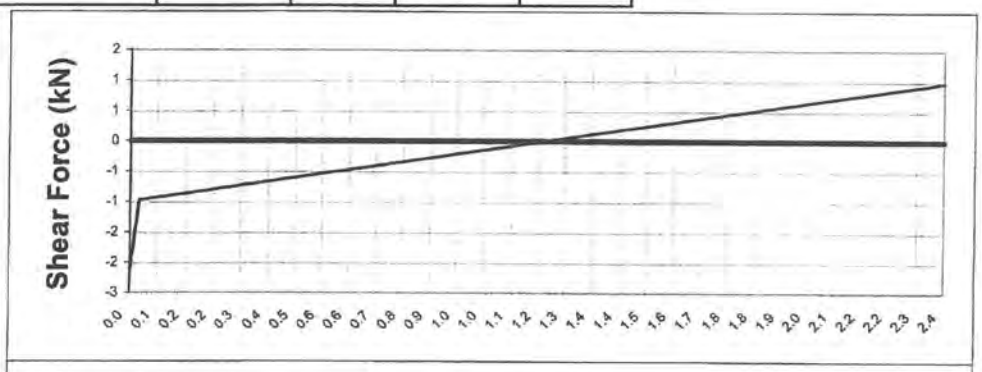

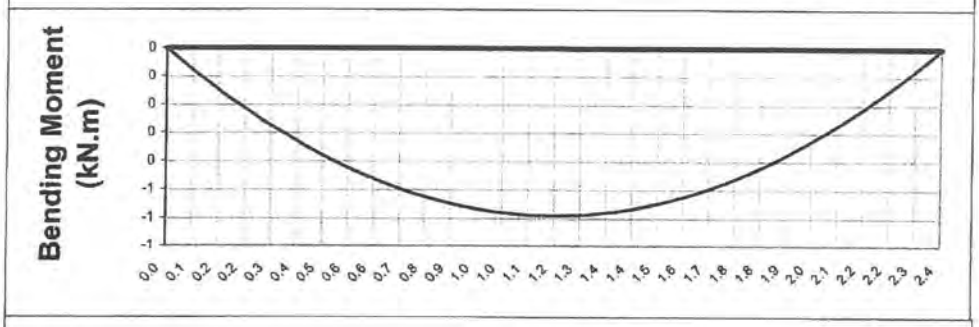

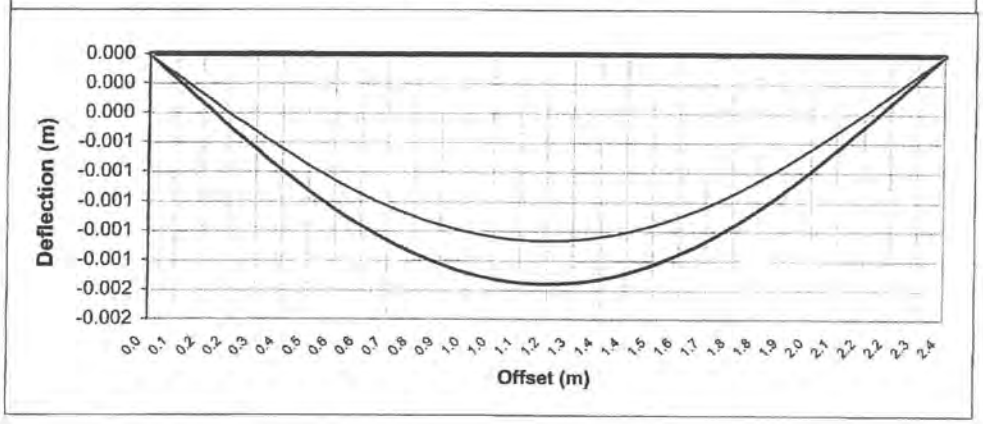

Check section using aluminium 6061 T5.
equivalent to 6063 T5 properties.
Compression on Angle.

$F_{tu} = 262$ Mpa.

$F_{ty} = 241$ Mpa.

$F_y = 241$ Mpa.

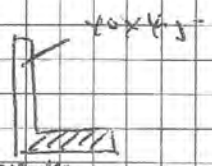

$\phi_y \times F_y \Rightarrow 0.95 \times 241 = 228.95$ Mpa.

Slenderness Limit S_1.

$b/t = (B_p - (\phi_y F_y / \phi_b))/5.1 P_p =$

$S_1 = 0.35 \times 271.04/(5.1 \times 1.637) = 11.02$ $b/t < S_1$

S_2: $L/t = 35.5/4.5 = 7.89$. $L/t < S_2$

$\phi F_c = 0.85 \times (271.04 - 5.1 \times 1.637 \times 10) = 157.25$ Mpa.

$I = 0.074 \times 10^6$

$Z = 2.91 \times 10^3$ mm³.

$\phi F_c Z = 2.91 \times 10^3 \times 157.25 = 0.46$ kNm

$M^* = 0.1$ kNm $< \phi F_c Z$ — ok

Check Bending / Tension on ~~M~~.

$1.3\,\phi_y F_{ty} = 1.3 * 0.95 \times 241 = 297.6\,MPa$

$1.4L\ \phi_u F_{yu}/k_t = 1.4 \times 0.85 \times 262/0.5 = 623.6$.

Compression given design ∴ ok ~~M~~. for bending.

Check Compression capacity.

$\phi F_c = 0.85 \times \pi^2 E/(5.15 r)^2 = 71.86\,MPa$.

$A = 0.390 \times 10^3\,mm^2$.

$\phi P_n = 71.86 \times 0.39 \times 10^3 = 28.0\,kN$. $> P^*(0.4kN)$ ok

Shear check.

$S_1 = (229.59 - 131.1/0.9)/(1.25 \times 1.315) = 51.5$

$h/t \not> S_1$ ∴ $\phi F_s = \phi_y F_{sy}$

$= 131.1\,MPa$

Area $= 45 \times 4.5 = 202.5\,mm^2$

Shear capacity $= 202.5 * 131.1 = 26.54\,kN$ ok

Final Design Adopt 45×4.5 EA Aluminium.

CLIENT:	JOB No: 5129148	SHEET: 3 of
JOB:	CALCS BY: CO (PRINT NAME)	DATE:
SUBJECT:	CHECKED BY: (PRINT NAME)	DATE:

Check connection

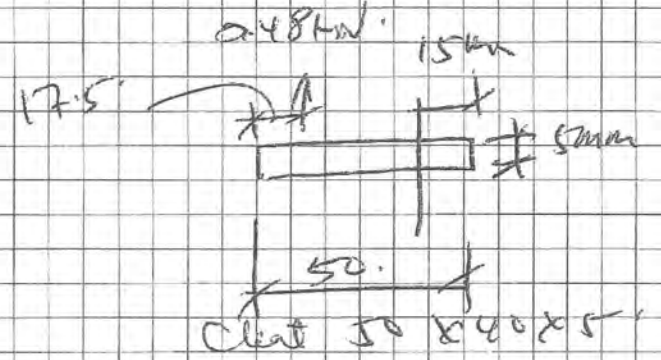

$M^* = \frac{17.5}{1000} \times 0.48kN = 8.4 \times 10^{-3}$ kNm

$\sigma = \frac{8.4 \times 10^{-3} \times 10^6 \times 6}{40 \times 5.0^2} = 50.4$ MPa stress on cleat

By inspection, cleat OK.

Check 2nd cleat

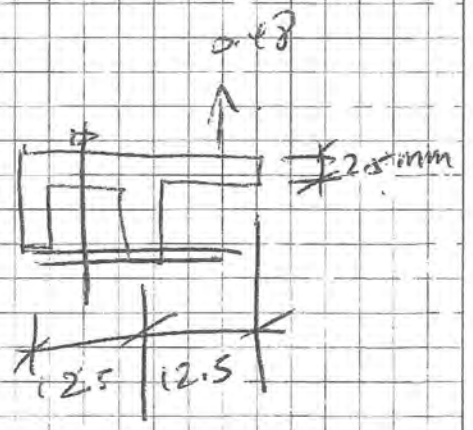

$M^* = 0.48 \times \frac{0.3}{1000} = 3.02 \times 10^{-3}$

$\sigma = \frac{4.8 \times 10^{-3} \times 1 \times 10^6 \times 6}{40 \times 2.5^2} = 73$ MPa.

$\phi f_c = 1.3 \times 0.95 \times 24 = 29.7$ MPa >> 73 MPa ok

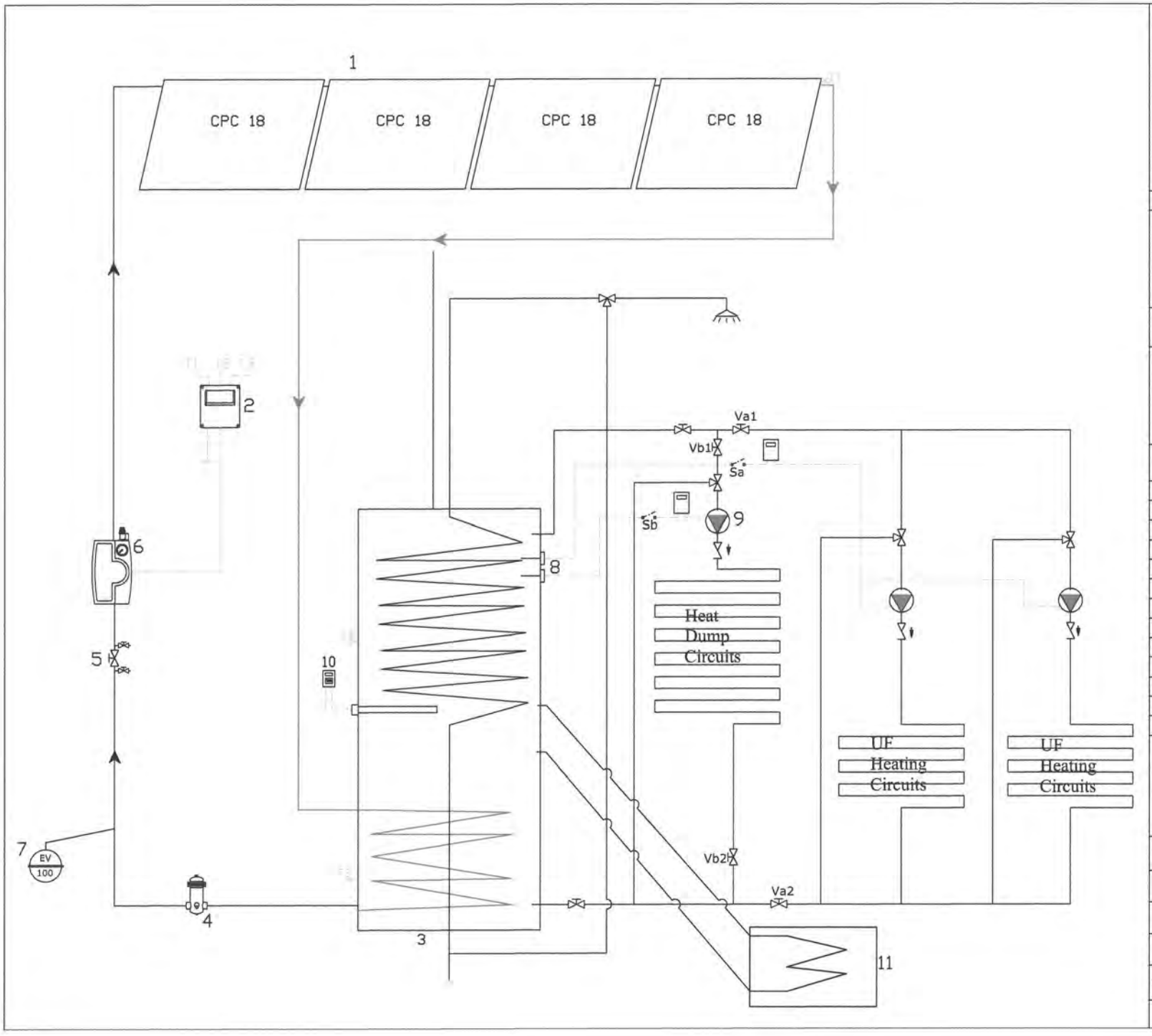

Azzuro Solar Ltd.

Unit 4A, Ash Road, Manukau City.
Auckland 2104
Phone 09262 0327
Fax 09 263 0457

www.azzurosolar.co.nz

Drawing-No.:	101104
PROJECT:	Waikanae Eco House
DRAFT: 01	DATE: 04.11.10

Components

01	Collector
02	Controller
03	Thermostore
04	Air Deaerator
05	Filling/Rinsing Valve
06	Solar Station
07	Expansion Vessel
08	Thermostat
09	Heat dump pump
10	Timer
11	Boiler
12	
13	

pump	isolating Valve manual
nonreturn Valve	Solostat-Rly
flowmeter	expansion vessel liter
sensor	fill and drain cock
?bar safety Valve	TPR TPR valve
pressure Gauge	Tempering valve

Date:

City Council: _____

To Whom it may concern:

Dear Sir and Madam

This letter is to confirm that Azzuro Solar is an accredited supplier of Solar Water Heater Company of EECA.

Azzuro Solar domestic solar water heaters (DSWH's) are high performance systems. The CPC evacuated tube collector panels were designed and developed in Germany. Azzuro Solar DSWH's are manufactured and installed in accordance with the following European, Australian and New Zealand standards:

Product manufacture

- AS/NZS 2712 Solar and heat pump water heaters – Design and construction
- NZS 4613
- Code of Practice for Manufacture and Installation of SWH Systems in NZ

Energy performance

- EN 12975-2 – Report of Performance Test for a glazed Solar Collector
- AS 4234 - Product energy output

Installation

- **NZBC G12/AS2 –Acceptable Solution G12/AS2 for Solar Water Heaters**
- AS/NZS 3500.4 Plumbing and drainage, part 4 – Heated water services
- "Code of Practice for Manufacture and Installation of SWH Systems in NZ"

Impact resistance

- DIN EN 12975-2 (25mm hail stones at 23 m/s)

To ensure high installation standards are maintained and to ensure systems operate at maximum performance and efficiency, Azzuro Solar DSWH's must only be installed by Azzuro Solar accredited specialists.

Please don't hesitate to contact us if you need any more information.

Regards

Azzuro Solar NZ Limited

Azzuro Solar Limited, PO Box 76642, Manukau City 2241 •Unit 4A, 23 Ash Road, Manukau City, Auckland
Phone 09 2620327 • Fax 09 2630457 • Email info@azzurosolar.co.nz • www.azzurosolar.co.nz

thinking for the future azzuro solar

CUSTOM CYLINDER ORDER FORM

Re: 100209 custom cylinder order form

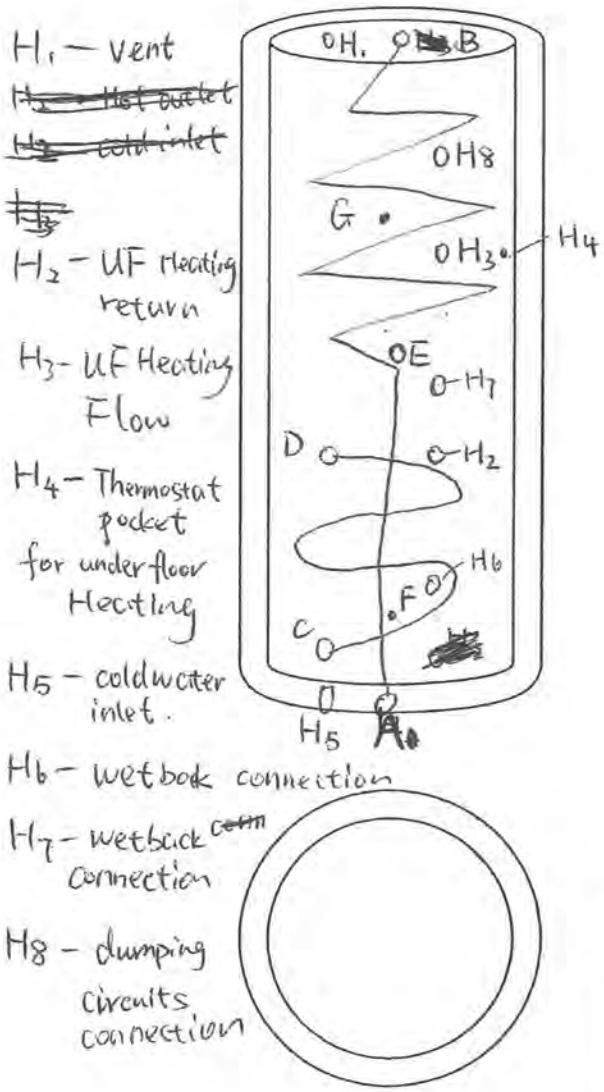

Household occupancy			
Collector Area (m²)	12m²		
Cylinder Capacity (L)	500L		
Water Pressure (Please Circle)	Low or non.	Mains	
Cylinder Application (Please Circle)	Solar + Electric	Solar + Wetback	
	Solar + Instantaneous Gas	Solar + Gas Boiler	
	Solar Coil (kw)	12 kw	
	Wetback Coil (kw)	N/A	
	Other: wetback connection		
Cupboard Size (mm)	Height	Depth	Width
	TBA		
Cylinder measurement (mm)	Height	Diameter	
	720	1860	
Cylinder Connection (mm)	Cold water inlet	Hot water outlet	Solar coil

Please mark the position of the following connections including the angles between them (in plan view) on the diagrams opposite:

A- Potable water inlet connection
B- Potable Water outlet connection
C- Solar inlet connection
D- Solar outlet connection
E- Electric element position
F- Solar inlet sensor pocket
G- Tank sensor pocket
H- Position of any additional connections coil required

Order No.		Order from		Azzuro Order No.	
Order Date		Customer Name		Customer Phone No.	
Required Delivery Date		Delivery Address			

Azzuro Solar Limited, PO Box 76642, Manukau City 2241 Unit 4A, 23 Ash Road, Manukau City, Auckland
Phone 09 2620327 Fax 09 2630457 Email admin@azzurosolar.co.nz www.azzurosolar.co.nz

Azzuro Solar CPC Collector specifications

Item	Units	CPC6	CPC12	CPC18
No. Of evacuated tubes		6	12	18
Required mounting brackets per collector		2	2	3
Collector height	m	1.64	1.64	1.64
Collector depth	m	0.1	0.1	0.1
Collector width	m	0.7	1.39	2.08
Gross surface area	m^2	1.14	2.28	3.41
Aperture area	m^2	1.0	2.0	3.0
Collector capacity	l	0.8	1.6	2.4
Collector weight empty	kg	19	37	54
Collector weight empty	kg/ m^2	16.7	16.3	15.9
Collector weight full with water	kg/ m^2	17.5	17.85	18.25
Maximum pressure	bar	10	10	10
Maximum stagnation temperature	°C	295	295	295
Pipe connection diameter	mm	15	15	15
Sensor pocket inner diameter	mm	6	6	6
Heat transfer fluid		H_20	H_20	H_20
Collector material		Al/Cu/Glass/Silicone /PBT/EPDM/TE		
Evacuated tube material		Borosilicate 3.3		
Evacuated tube dimensions	mm	O.D = 47, length = 1500		
Selective absorber layer		Aluminium nitrate		

Azzuro Solar Limited, PO Box 76642, Manukau City 2241 •Unit 4A, 23 Ash Road, Manukau City, Auckland
Phone 09 2620327 • Fax 09 2630457 • Email info@azzurosolar.co.nz • www.azzurosolar.co.nz

5. Installation on flat roofs

5.1 Space requirement

Space requirement for a single-row collector field.

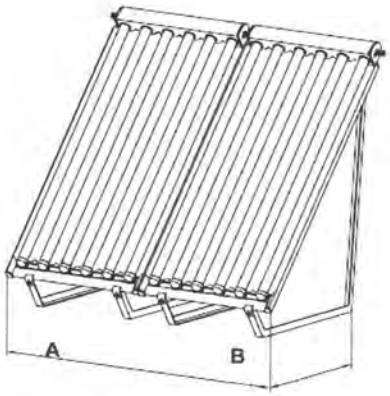

	CPC 6 OEM				CPC 12 OEM				CPC 18 OEM		
Number of collectors	Dim.	Dim.	Dim.		Dim.	Dim.	Dim.		Dim.	Dim.	Dim.
	A	B	B		A	B	B		A	B	B
		30°	45°			30°	45°			30°	45°
	(m)	(m)	(m)		(m)	(m)	(m)		(m)	(m)	(m)
1	0,70	1,47	1,23		1,40	1,47	1,23		2,10	1,47	1,23
2	1,40	1,47	1,23		2,80	1,47	1,23		4,20	1,47	1,23
3	2,15	1,47	1,23		4,20	1,47	1,23		6,30	1,47	1,23
4	2,85	1,47	1,23		5,60	1,47	1,23		8,35	1,47	1,23
5	3,55	1,47	1,23		7,00	1,47	1,23		10,45	1,47	1,23
6	4,25	1,47	1,23		8,40	1,47	1,23		12,55	1,47	1,23

Free distance between the collectors, for double or multi row collector fields.

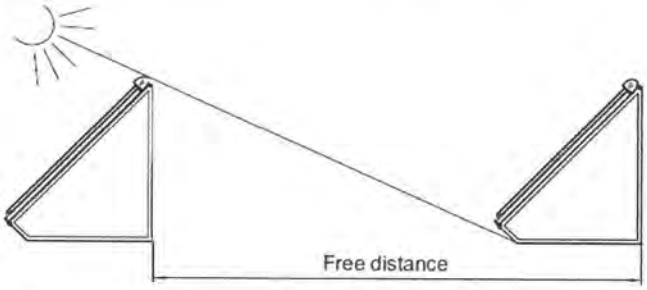

Type of use	Main utilization period	Free distance 30° (m)	Free distance 45° (m)
Service water	May until August	2,6	Not appropriate
Service water	April until September	Not appropriate	3,1
Service water and heating	March until October	Not appropriate	4,0
Service water and heating	All year round	Not appropriate	5,0

Figure 6: Flashing for pipes, cables and other penetrations
Paragraphs 5.2.4 and 5.2.5 a)

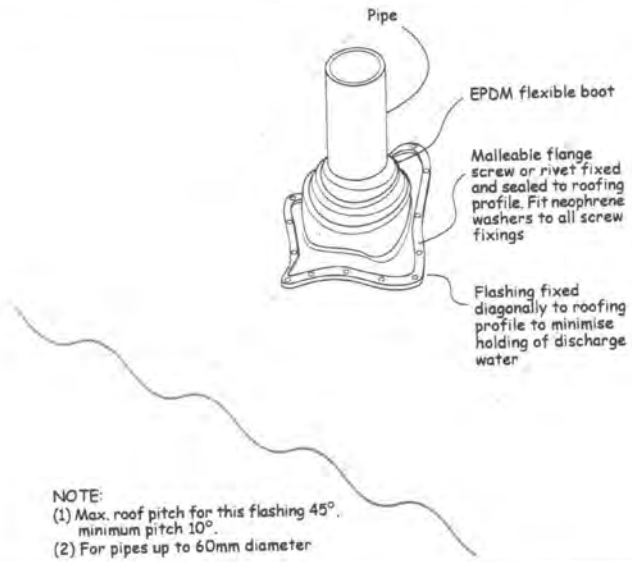

Figure 7: Soaker flashings for penetrations (profiled metal roofs)
Paragraph 5.2.5 b)

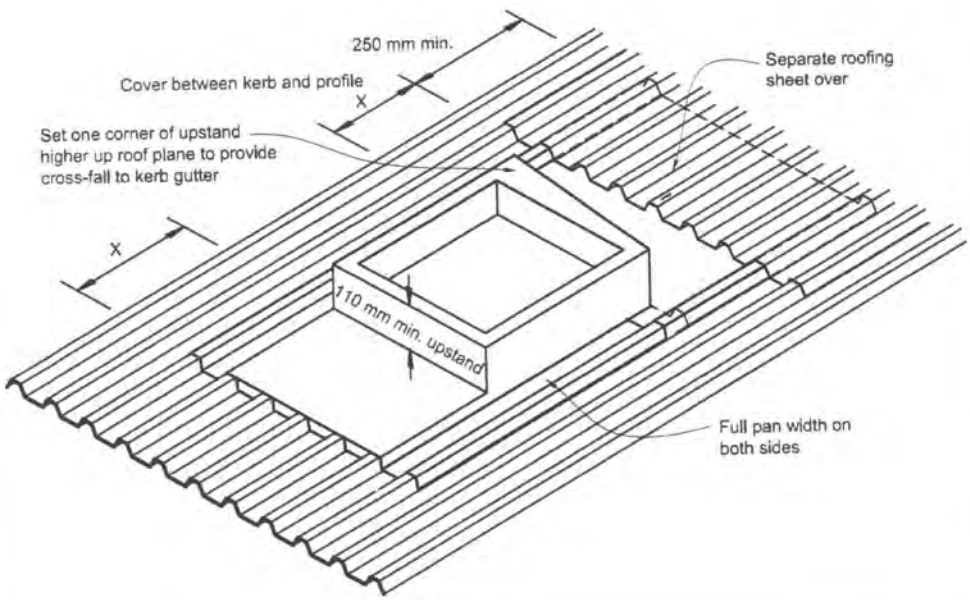

Plumb Ltd
Consulting Engineers
4th Floor,
191 Thorndon Quay,
Wellington 6001.
Ph: (04) 471 0021; Fax: (04) 471 0092
e-mail info@plumbengineering.co.nz

STRUCTURAL CALCULATIONS

Azzuro Solar water Heaters

Checking Roof Structures

Job: 3568

Date: 7/07

These Calculations are intended to comply with Sections B1 of the New Zealand Building Code. Other parties are to ensure compliance with other relevant sections of the Code.

The scope of these calculations is as shown in the index below and in summary includes the following:

Check roof structures to NZS 3604 for loading imposed by solar water heaters

REFERENCE DOCUMENTS

NZS 4203 1992 General Structure Design and Design Loadings for Buildings
~~NZS 3404 1997 Steel Structures Standard~~
NZS 3603 1993 Timber Structures Standard
~~NZS 4229 1999 Concrete Masonry not requiring specific design~~
~~NZS 4230 2004 Design of Masonry Structures~~
~~NZS 3101 1995 Concrete Structures Standard~~
~~NZS 3109 1997 Specification for Concrete Construction~~

INDEX

	Page No
Gravity & Wind loads	A1 – A2
Purlin & Rafter checking	A2

12/05/2008 04:19 0447100 92 PLUMB PAGE 02/07

Plumb Ltd Structural Engineers
4th Floor
191 Thorndon Quay
Wellington 6011
Ph: (04) 471 0021
Fax: (04) 471 0002
info@plumbengineering.co.nz

Solar Water Heaters
Structural Assessment of Roofing

Job	3568
Date	9/07
Section	A
Page	1

Gravity Loads

$W_H = 54\,kg + 2.4\,kg = 56.4\,kg$

collector panel water

Assume supported at 4 points

∴ Load / pt = 14.1 kg insignificant

Equivalent udl = $16.52\,kg/m^2$ = 0.162 kPa

< 0.25 kPa design loading

Wind Loading

Design for very high wind to NZS3404

V_z = 50 m/sec @ 8m eaves

∴ $q_{basic} = 0.6(50)^2 = 1.500$ kPa

$C_p = 1.2$

∴ Design wind pressure = 1.2 × 1.5 = 1.8 kPa

Max inclination = 41° + 20°
= 61°

W_u = 5.37 kN

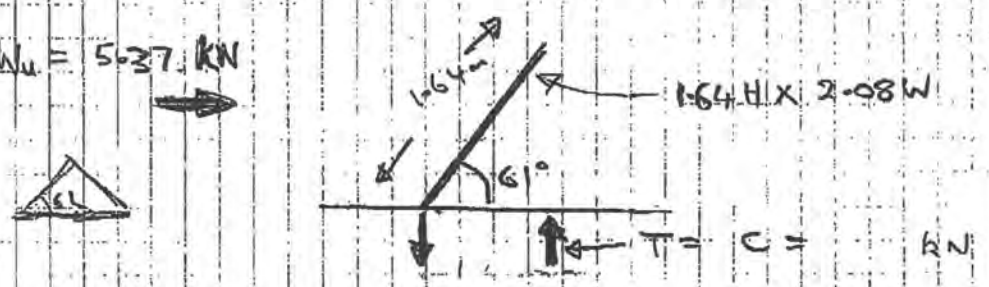

W_u = 1.8kPa × 1.64m × 2.08m sin 61° = 5.37 kN

DESIGNED CHECKED

Plumb Ltd Structural Engineers
4th Floor
191 Thorndon Quay
Wellington 6011
Ph: (04) 471 0021
Fax: (04) 471 0092
info@plumbengineering.co.nz

Solar Water Heaters
Structural Assessment of Roofing

Uplift / Download $= 5.37\ kN \times \dfrac{\frac{1.64m \sin 61}{2}}{1.64 \cos 61}$

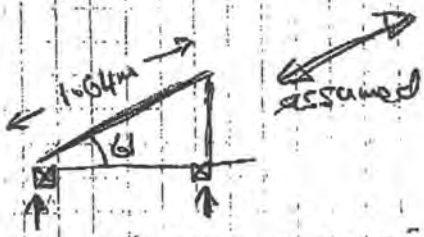

$= 4.84\ kN$

$= 4 \times 2.42\ kN$ – to each of 4 corners

worst case scenario

Purlin checking – 1.2m max span

a) Wind W_u

$M^* = 2.42 \times 1.2m/4 = 0.73\ kNm$

b) gravity G

$M^* = 56.4kg/4 \times 0.00981 \times 1.2m/4 = 0.041\ kNm$

Checking Purlin capacities:

a) 75 x 40 on flat – min to NZS 3604

$\phi M_b = 0.8 \times 1.0 \times 14 \times 25^2 \times 69/6 \times 10^6 = 0.16\ kNm$

b) 100 x 50 on edge

$\phi M_b = 0.8 \times 1.0 \times 14 \times 92^2 \times 46/6 \times 10^6 = 0.73\ kNm$ OK

Rafters

NZS 3604 allows 70 x 35 @ 1.200 crs spanning 1.2

Obviously this will be overstressed – need to strengthen rafters similarly to purlins

DESIGNED CHECKED

AZZURO CPC - STANDS

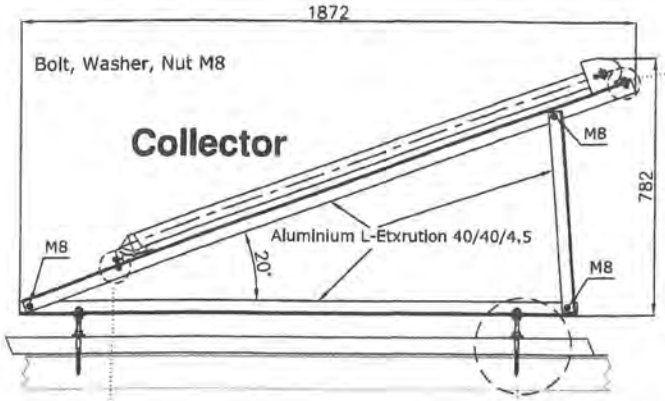

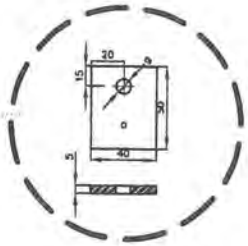

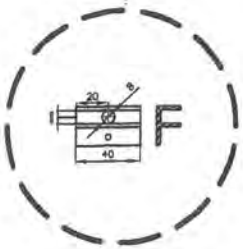

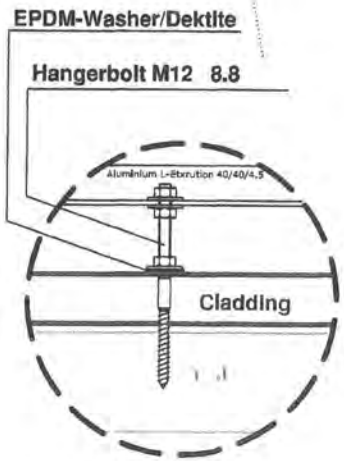

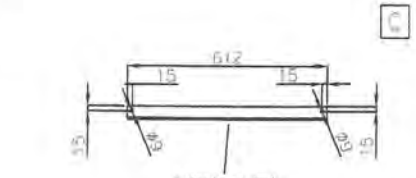

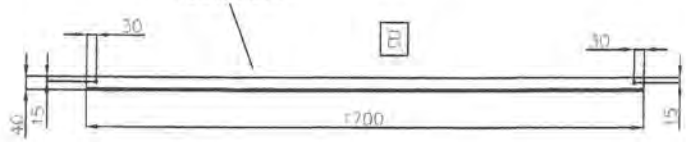

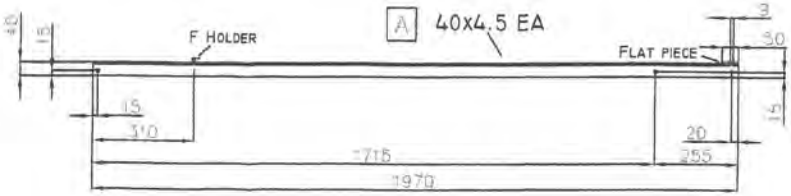

GHD Limited
1st Floor, Merial Bldg
Putney Way
Manukau City

7/3/11

Notes
Site check all existing levels and Dimensions prior to putting work in hand

Existing dwelling built in accrdance with NZS 3604

All flashings are to be installed in accrdance with E2/AS1
All plumbings are to be installed in accrdance with G12/AS1

All bolts/ Washer to be galvanised

These drawings are to remain the property of Azzuro Solar Ltd, and should not be copied copied without permission of Azzuro Solar Ltd.

Job Title
Solar Water Heating

Drawing Title
DETAILS & SPECIFICATION

Scale	
Job No.	
Drawn No.	AZZ RK-STD20
Checked	
Date	23/2/2011

AZZURO CPC - STANDS

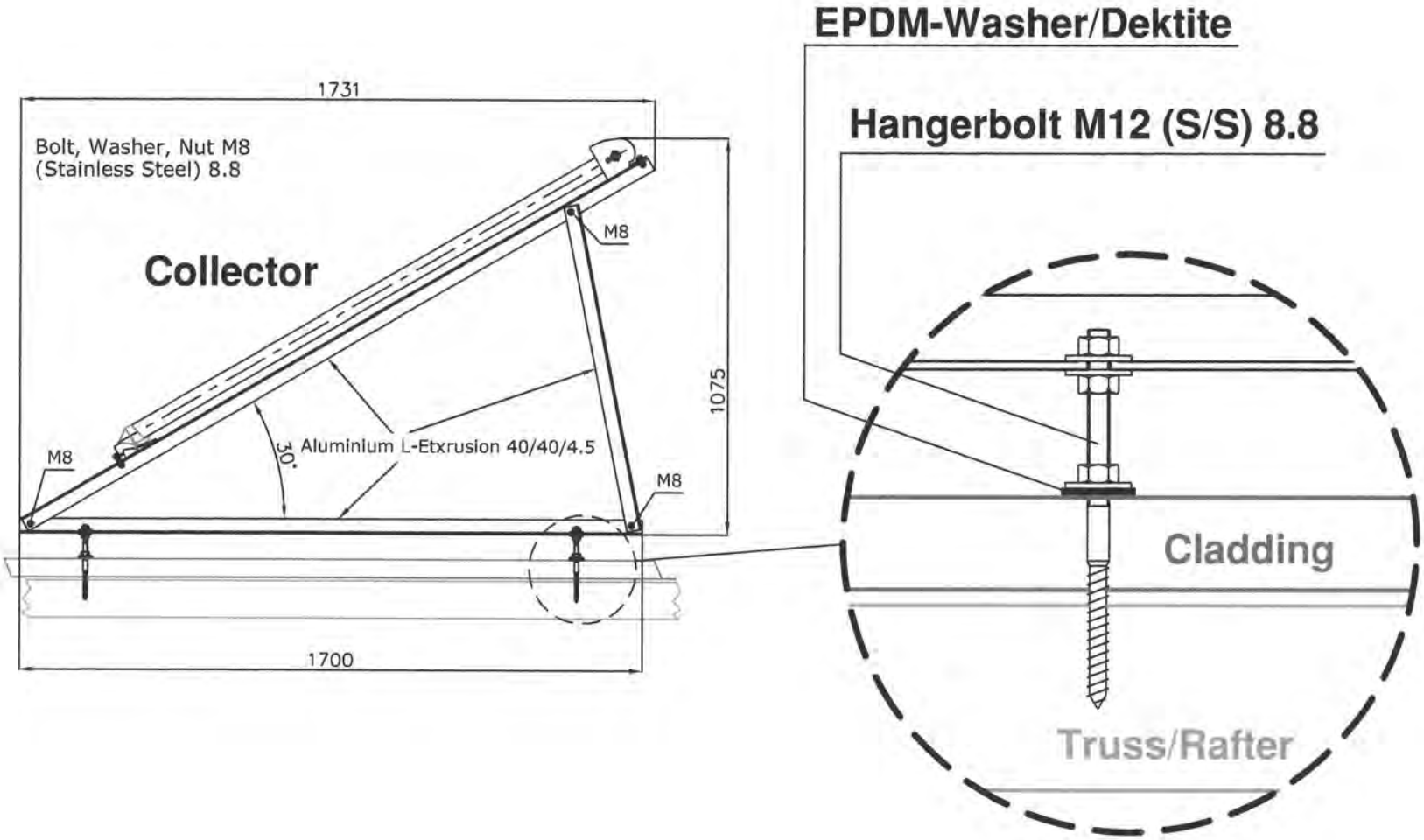

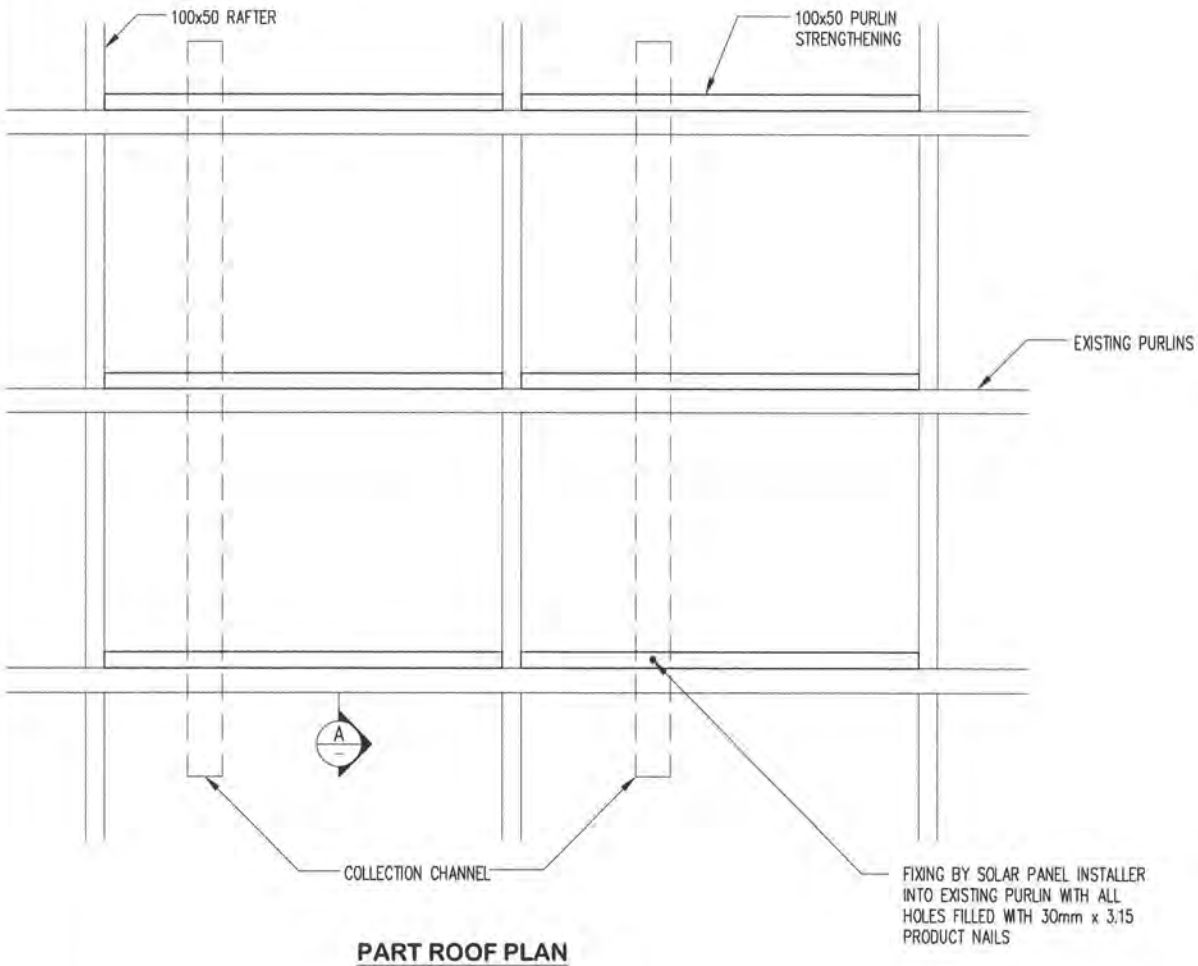

PART ROOF PLAN

1:20

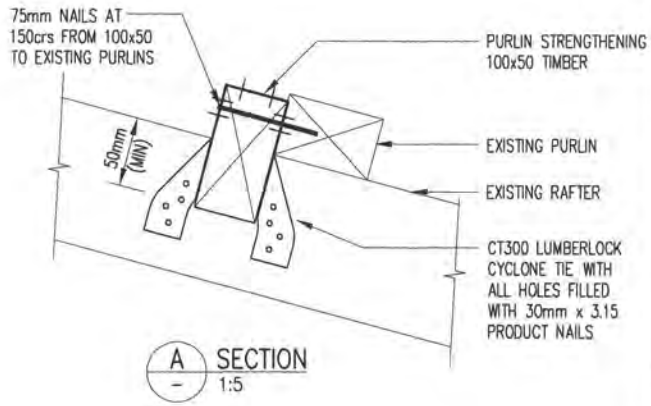

A SECTION
1:5

STRUCTURAL DESIGN CRITERIA

1 VERY HIGH WIND ZONES AT 8m HEIGHT
2 PANEL ELEVATION BETWEEN 40°&45°
3 ROOF SLOPES 15° TO 60°
4 COLLECTION PANEL TYPE
  CPC 6 TWO COLLECTOR CHANNELS
  CPC 12 THREE COLLECTOR CHANNELS
  CPC 18 THREE COLLECTOR CHANNELS
5 REFER AZZURO DRAWING FIXING DETAIL FOR IRON CLAD ROOFS

NOTES

1 ALL WORK TO COMPLY WITH NZS 3604
2 ALL STRUCTURAL TIMBER TO BE MSG/VSG 8
3 ALL TIMBER TO BE H1.2 TREATED

PLUMB Ltd
Consulting Engineers
4th Floor 191 Thorndon Quay Wellington 6001
Ph: (04) 471 0021 Fax: (04) 471 0092
email: info@plumbengineering.co.nz
ACENZ

AZZURO SOLAR NZ LTD
STRUCTURAL FIXING TO TIMBER FRAMED PROFILED STEEL ROOFING

Designed	RAL
Drawn	RD
Approved	

Copyright on this drawing is reserved

No.	Revision/Issue	Date
A	FOR CONSENT	05.07.07

Project	3568
Sheet	001
Date	05.07.07
Scale	AS SHOWN
Issue	A
	A4

These Calculations are intended to comply with Sections B1 of the New Zealand Building Code. Other parties are to ensure compliance with other relevant sections of the Code.

The scope of these calculations is as shown in the index below and in summary includes the following:

Determination of specific design roof to resist wind loads on solar heater panel
Refer to Architecture DM Limited drawings ADM 06-05 of 25-09-07

REFERENCE DOCUMENTS

AS/NZS 4203 1170 Structural design actions
NZS 3404 1997 Steel Structures Standard
NZS 3603 1993 Timber Structures Standard
NZS 4229 1999 Concrete Masonry not requiring specific design
NZS 4230 2004 Design of Masonry Structures
NZS 3101 1995 Concrete Structures Standard
NZS 3109 1997 Specification for Concrete Construction

INDEX	PAGE NO
Loadings	1
Purlin check	2
Fixings	3

Plumb Ltd Structural Engineers
4th Floor
191 Thorndon Quay
Wellington 6011
Ph: (04) 471 0021
Fax: (04) 471 0092
info@plumbengineering.co.nz

Solar Water Heater
27 Fifeshire Cresc, Helston
Building Consent 071238

Job	3844
Date	7/08
Section	A
Page	1 of 3

Solar Water Panel loading = ± 2.42kN each corner

Proposed roof system 250 DHS @ 900 crs
(assume plan dimension)
Water panel dims @ 1.64m x 1.64m
In plan view, dimensions = 1.42m x 1.42m

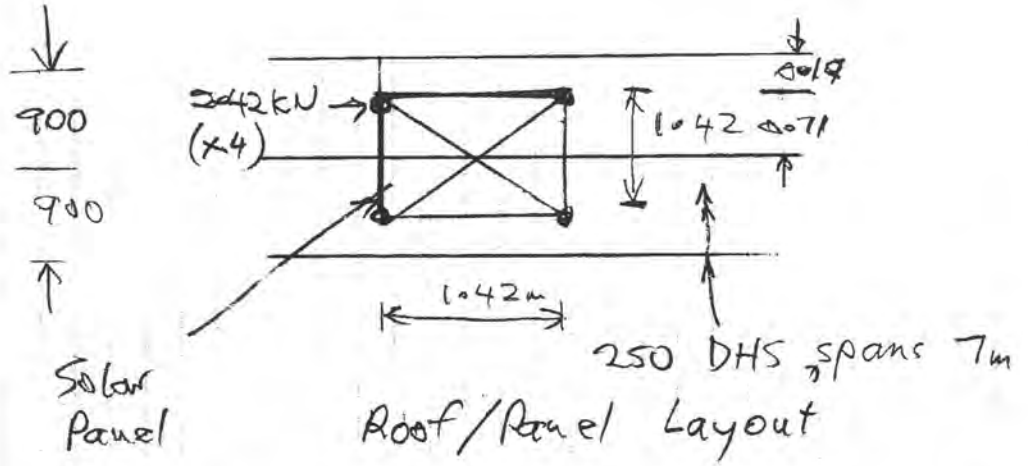

Roof/Panel Layout

∴ Max panel loading on purlin (on centre purlin)

$$p^* = 2 \times 2.42kN \times \frac{0.19m}{0.90m} = 1.02\ kN \times 2$$

or

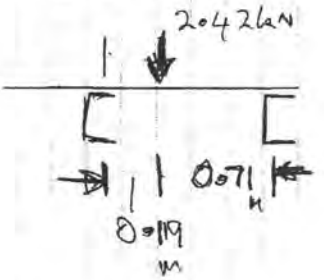

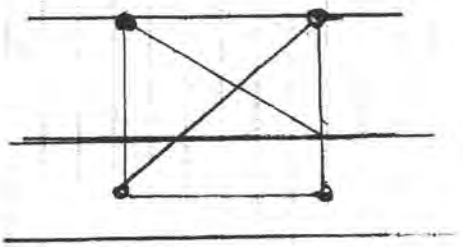

or $p^* = 2.42kN \times 2$

$= 2.42kN \times 2$

critical loading

DESIGNED CHECKED

Plumb Ltd Structural Engineers
4th Floor
191 Thorndon Quay
Wellington 6011
Ph: (04) 471 0021
Fax: (04) 471 0092
info@plumbengineering.co.nz

Solar Water Heater
27 Fifeshire Crescent
Nelson - Building Consent 071238

This is wind loading does not occur in conjunction with roof live loading

∴ Purlin loading;

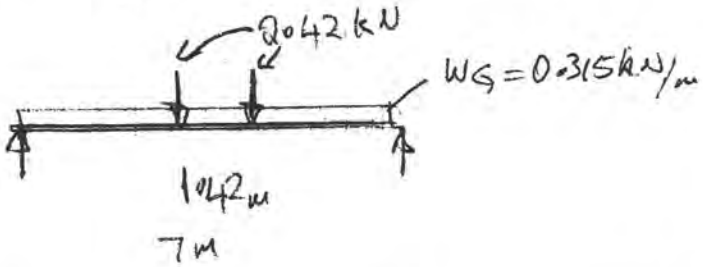

Max loaded purlin — downward load

$w_G = 0.35\,kPa \times 0.9 = 0.315\ kN/m$

$M^* \doteq 1.2 \times 0.315 \times \frac{7^2}{8} + 2.042\,kN \times \frac{7m}{4} \times 2$

$= 10.8\ kNm/purlin$

DHS 250 purlin $\phi M_b = 0.9 \times 500 \times 46.8 \times 10^{3-6}$

$= 21.1\ kNm$

$> M^*$

ie. purlins OK for strength for downward reaction — purlin braced by roof cladding

$$\Delta_{UH} = \frac{\left(\frac{5}{384} \times 0.315 \times 7000^4 + \frac{2420 \times 2}{48} \times 7000^3\right)}{2.08 \times 10^5 \times 5.86 \times 10^6}$$

$$\left(\frac{1}{EI} \left(\frac{5}{384} wL^4 + \frac{PL^3}{48} \right) \right)$$

$= 36.4\ mm$

$= L/192$ — this will be ok - for ultimate wind

DESIGNED CHECKED

Plumb Ltd Structural Engineers
4th Floor
191 Thorndon Quay
Wellington 6011
Ph: (04) 471 0021
Fax: (04) 471 0092
info@plumbengineering.co.nz

Solar Water Heater
27 Lakeshore Crescent
Nelson, Building Consent 071238

Job	3844
Date	7/08
Section	A
Page	3 of 3

Max loaded purlin – upward load

$M^* = 1.2 \times 0.315 \times 7^2/8 - 2 \times 2.42 \times \frac{7m}{4}$
$= -6.16$ kNm

Compression flange not braced by roof
Assume purlin has 1 brace @ centre
$\therefore \phi M_b = 10.75 kN/m \times 7^2/8 = 10.72 kNm/purlin$

ex load tables, 7m span, DHS 250/13 purlin

$\therefore \phi M_b > M^*$, purlin OK

Attachment panel / purlin

Assume 8mm 316 grade stainless steel
$\phi T = 0.9 \times 485 MPa \times 36.6 mm^2 = 15.0 kN$

tensile strength

threaded area

Assume 400 MPa standard bolt
$\phi T = 0.9 \times 400 MPa \times 36.6 mm^2 = 13.18 kN$

OK

DESIGNED CHECKED

designscape
298 rosetta road raumati

00026

FOUNDATION SOIL : 35b KOTARE STREET

The soil is clay soil, soft for about 700mm, then good ground as defined in NZS 3604.

The profile is the section is on the side of a hill, with a sealed access above the site channelling the surface water away. The site will be cut to form a level platform, and involves s small area of soft ground to be removed, and replaced with site fill (compacted).

The cut faces are being retained with engineered retaining walls. The walls effectively cut any subsurface water to the building platform, and this water is caught in the subsoil drains.

Fill and slab construction is under the control of the engineer.

RISK MATRIX SUMMARY

Client: **Ward house**
Address: 35B Kotare St
Job # 2690-01

see plans for location of elevations

Designscape
298 Rosetta Rd
Phone 04-902-8528

	Elevation 1		Elevation 2		Elevation 3		Elevation 4	
Wind Zone per NZS 3604	very high	2	very high	2	very high	2	very high	2
Number of Storeys	low	0	low	0	low	0	low	0
Roof/wall Intersection	low	0	low	0	low	0	low	0
Eaves width	high	3	high	3	high	3	high	3
Envelope complexity	medium	1	medium	1	medium	1	medium	1
Deck design	low	0	low	0	low	0	low	0
TOTALS		**6**		**6**		**6**		**6**
Cladding 1	EIFS		EIFS		EIFS		EIFS	
Fixing 1	~~Direct fixed~~		~~Direct fixed~~		~~Direct fixed~~		~~Direct fixed~~	
Cladding 2	Not applicable		Not applicable		Not applicable		Not applicable	
Fixing 2	Not applicable		Not applicable		Not applicable		Not applicable	

although direct fixed is shown ok cladding will be on cavity as per manufactures specifications

RECEIVED
00000

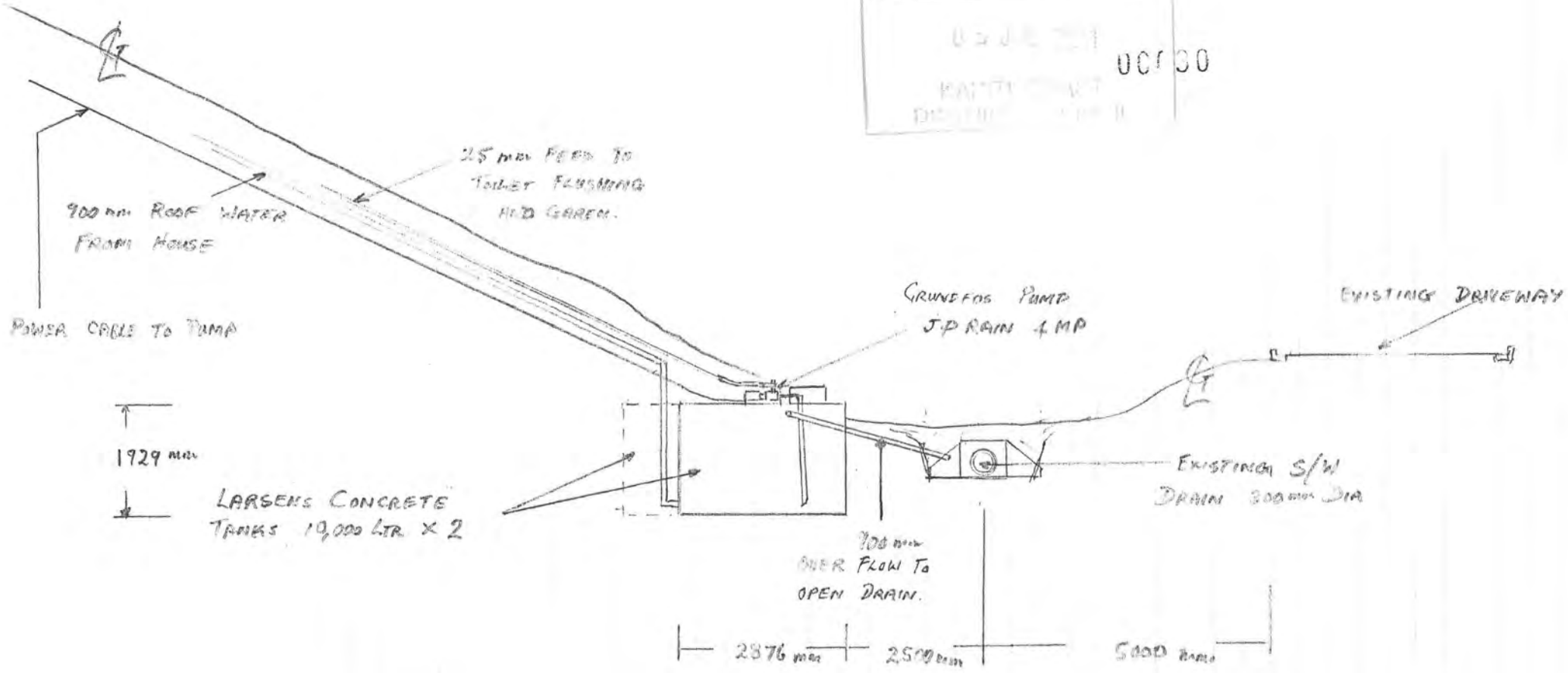

WARD HOUSE – RAIN WATER RETENTION – LARSENS PLB CONRETE TANK 30/6/11

35 B KOTARE ST – WAIKANAE 10,000 LTR CAPACITY X 2 SCALE 1:10

RevNo	Revision note	Date	Signature	Checked

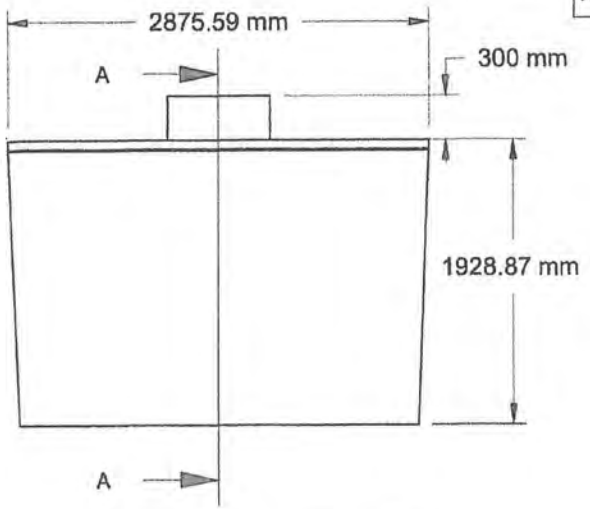

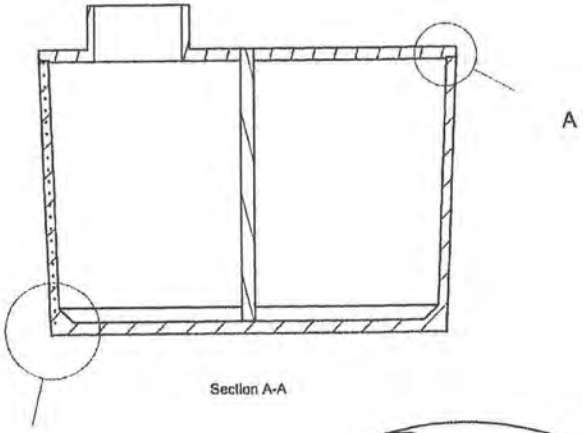

Material
Concrete Shength 40 mpa

See Sheet 2 for Mesh Detail

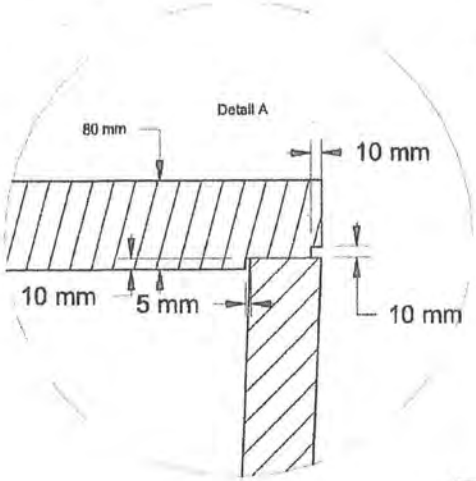

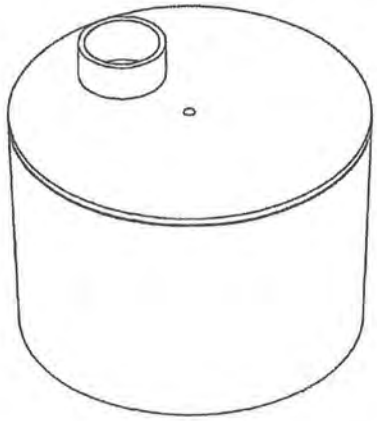

Itemref	Quantity	Title/Name, designation, material, dimension etc			Article No./Reference	
Drawn by		Checked by	Approved by - date	File name	Date	Scale
				10000 LITRE TANK		
					Edition	Sheet

SOLATUBE
Innovation in Daylighting

Online Ordering Login | About Us | Media Resources | Contact Us

Homeowner

What is Daylighting? Room Gallery Product Catalog What People Are Saying

Home Homeowner

-- Select City -- GO

How Does it Work?
Learn More about Solatube Daylighting Systems and how they can brighten every room in the home.

Before & After Photo Gallery
Visit our Before & After Gallery and see for yourself how a Solatube Daylighting System can brighten any room.

Sign up for specials and promotions
Name:
Email:
Subscribe

Solatube New Zealand | HomeTech Ltd| 0800 HOMETECH (466 383) |
From overseas: +64 4 568 3232

Search:
Search
powered by Google

Sitemap

hometech Follow us on facebook

© HomeTech Ltd
Trademarks | Privacy Policy

RECEIVED
0 5 JUL 2011 00023
KAPITI COAST
DISTRICT COUNCIL

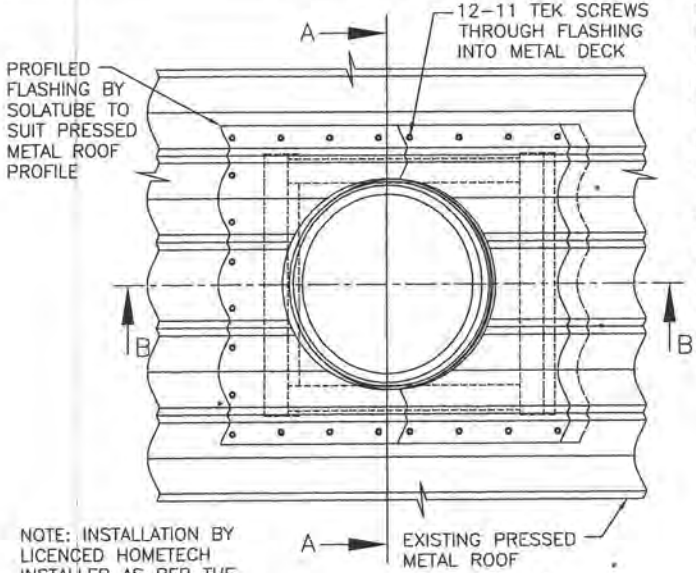

NOTE: INSTALLATION BY LICENCED HOMETECH INSTALLER AS PER THE SOLATUBE AUSTRALIA MANUFACTURING SPECIFICATION

PLAN
SCALE 1:10

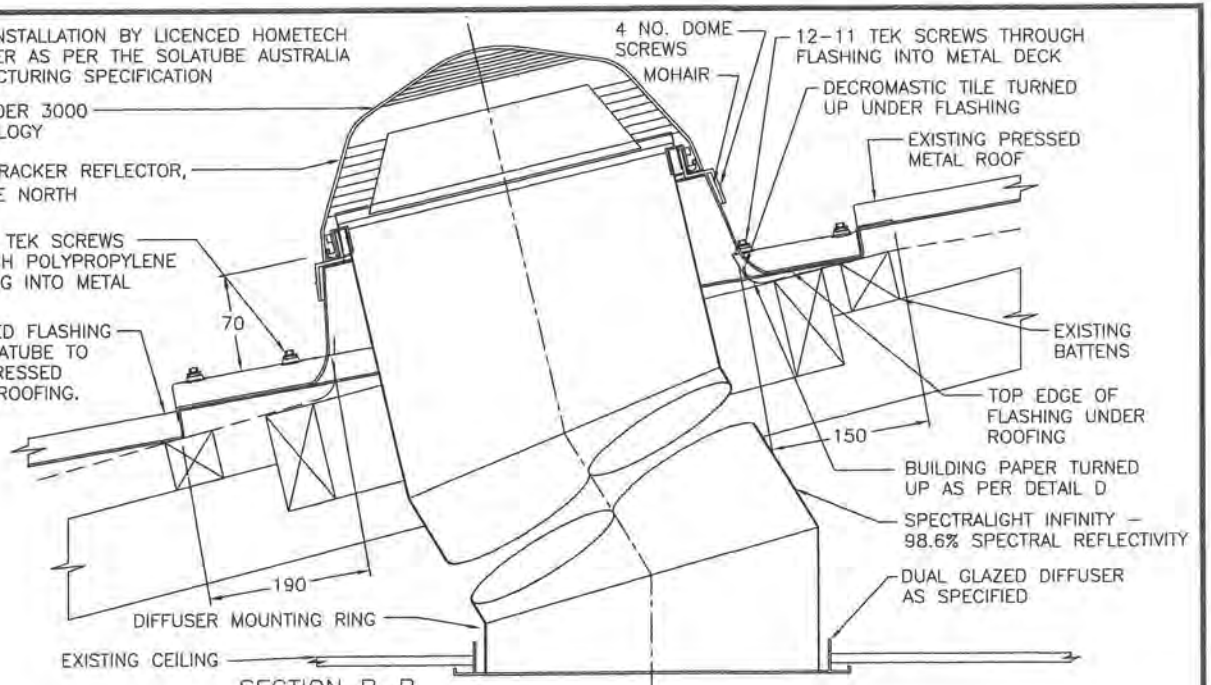

SECTION B-B
SCALE 1:5

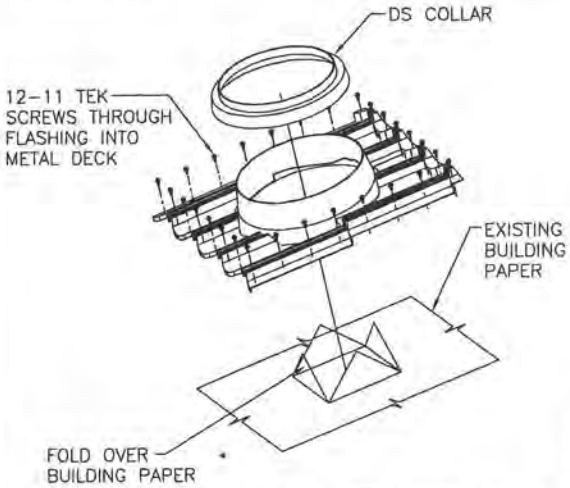

DETAIL D - 3D EXPLODED VIEW
N.T.S.

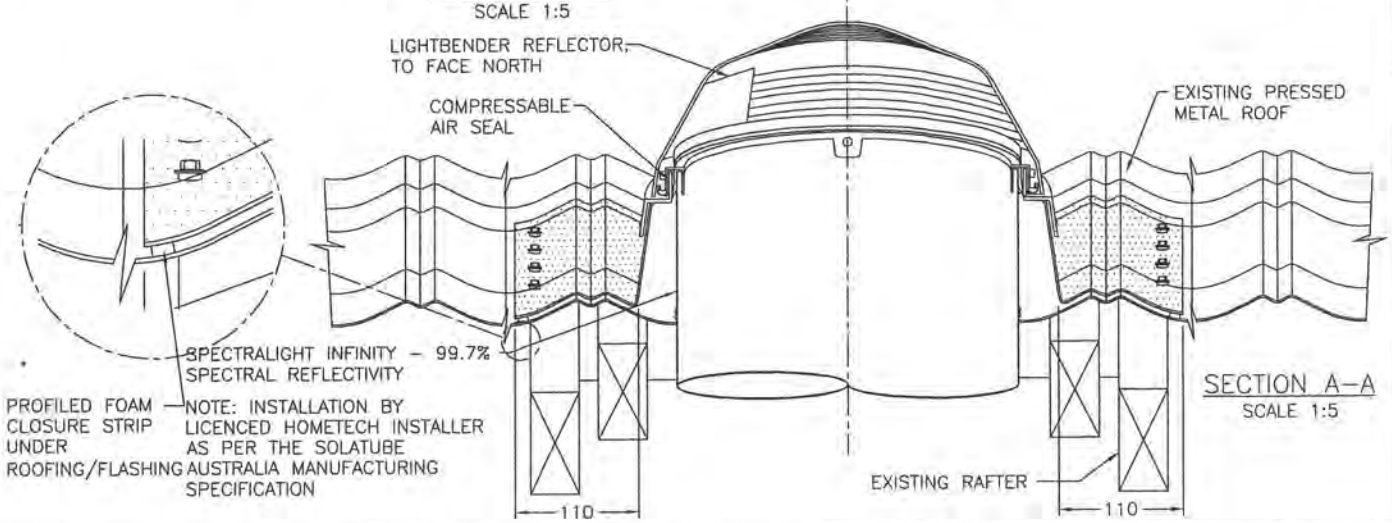

SECTION A-A
SCALE 1:5

HOMETECH
HEALTHY HOME SOLUTIONS
PHONE: 0800 466-383
WEB: www.solatube.co.nz

SOLATUBE.
Innovation in Daylighting.
BRANZ Approved
Copyright
Trademarks and Patents registered.
Authorised Distributor
HomeTech Limited. New Zealand.

SOLATUBE 290DS (350ø) TUBULAR DAYLIGHTING DEVICE (TDD) INSTALLATION FOR PRESSED METAL ROOF e.g. DECROBOND

INSTALLATION: INSTALLED BY A LICENCED HOMETECH INSTALLER AS PER THE SOLATUBE AUSTRALIA MANUFACTURING SPECIFICATION

© 2009 HomeTech Ltd

DRAWN	PCR	REVISION	B
DATE	25/9/09	SCALE	1:5,1:10,NTS
APPROVED	PN	DWG NO.	290DS-D
DATE	25/9/05		

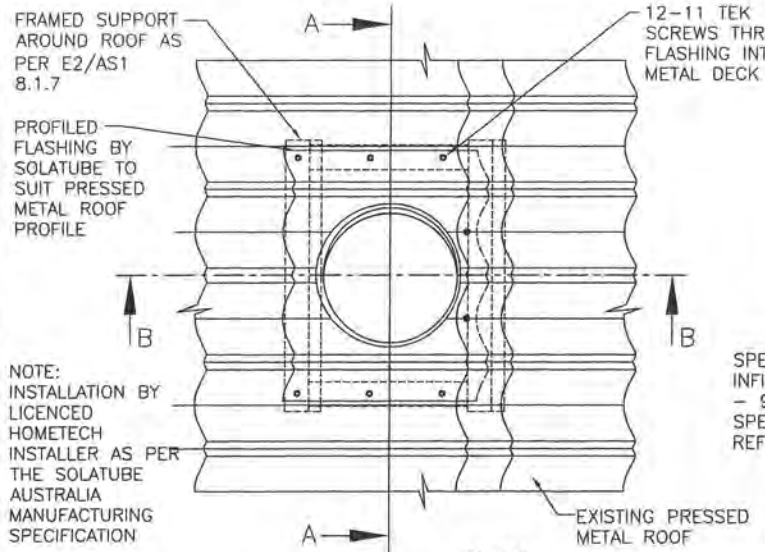

PLAN
SCALE 1:10

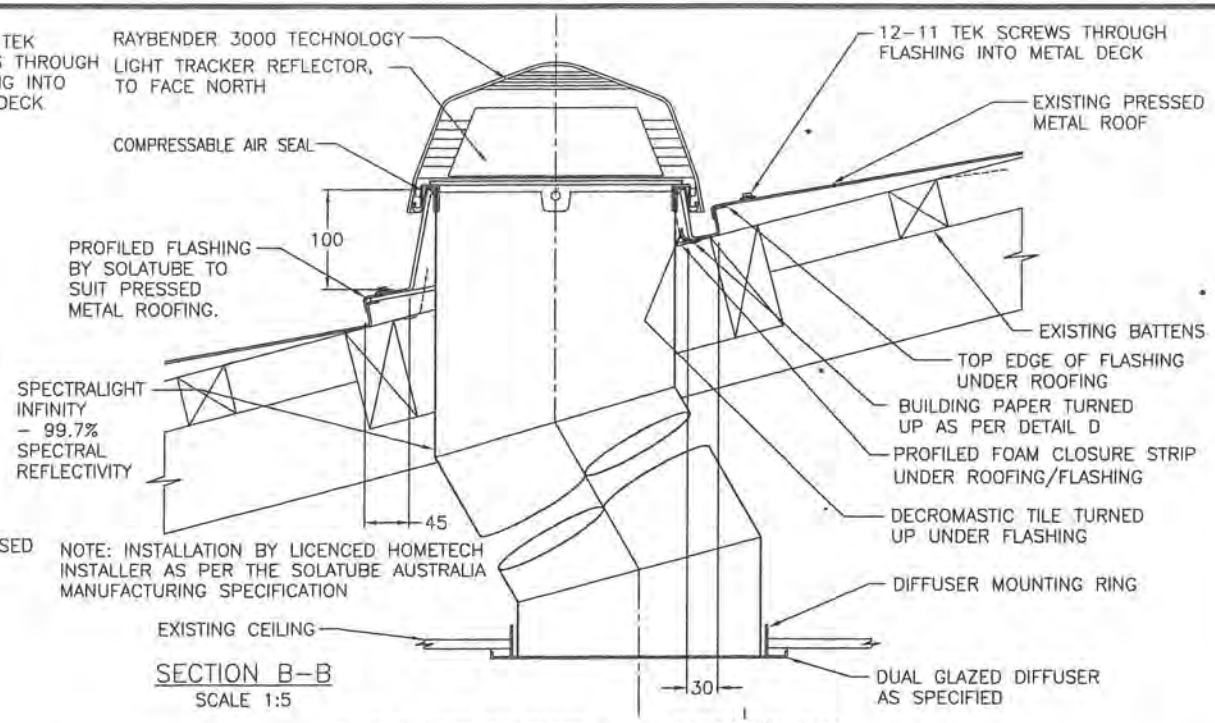

SECTION B-B
SCALE 1:5

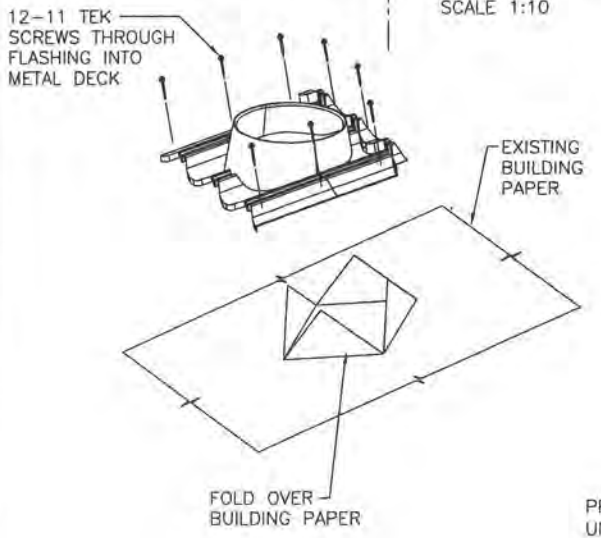

DETAIL D - 3D EXPLODED VIEW
N.T.S.

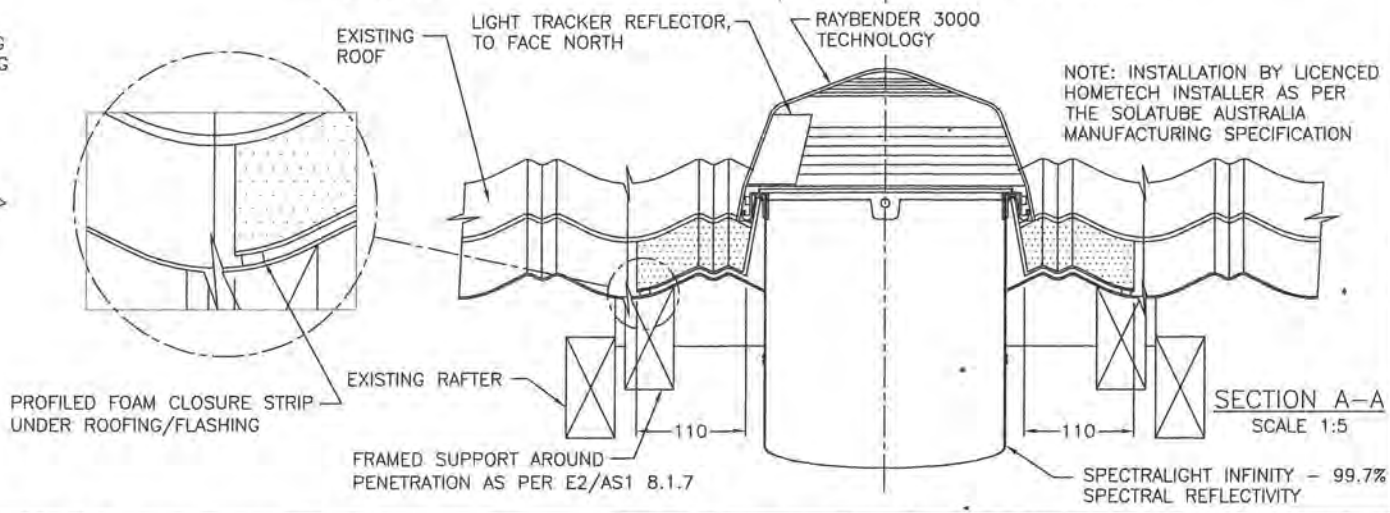

SECTION A-A
SCALE 1:5

HOMETECH
HEALTHY HOME SOLUTIONS
PHONE: 0800 466-383
WEB: www.solatube.co.nz

SOLATUBE.
Innovation in Daylighting.
Copyright Trademarks and Patents registered.
Authorised Distributor HomeTech Limited: New Zealand.

SOLATUBE 160DS (250ø) TUBULAR DAYLIGHTING DEVICE (TDD)
INSTALLATION FOR PRESSED METAL ROOF e.g. DECROBOND

INSTALLATION: INSTALLED BY A LICENCED HOMETECH INSTALLER AS PER THE SOLATUBE AUSTRALIA MANUFACTURING SPECIFICATION

© 2009 HomeTech Ltd

DRAWN	PCR	REVISION	A
DATE	15/09/09	SCALE	1:5,1:10,NTS
APPROVED	PN	DWG NO.	160DS-D
DATE	15/09/09		

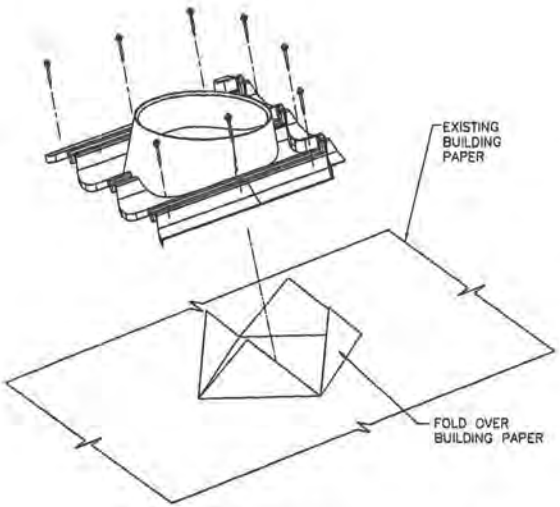

DETAIL D – 3D EXPLODED VIEW
N.T.S.

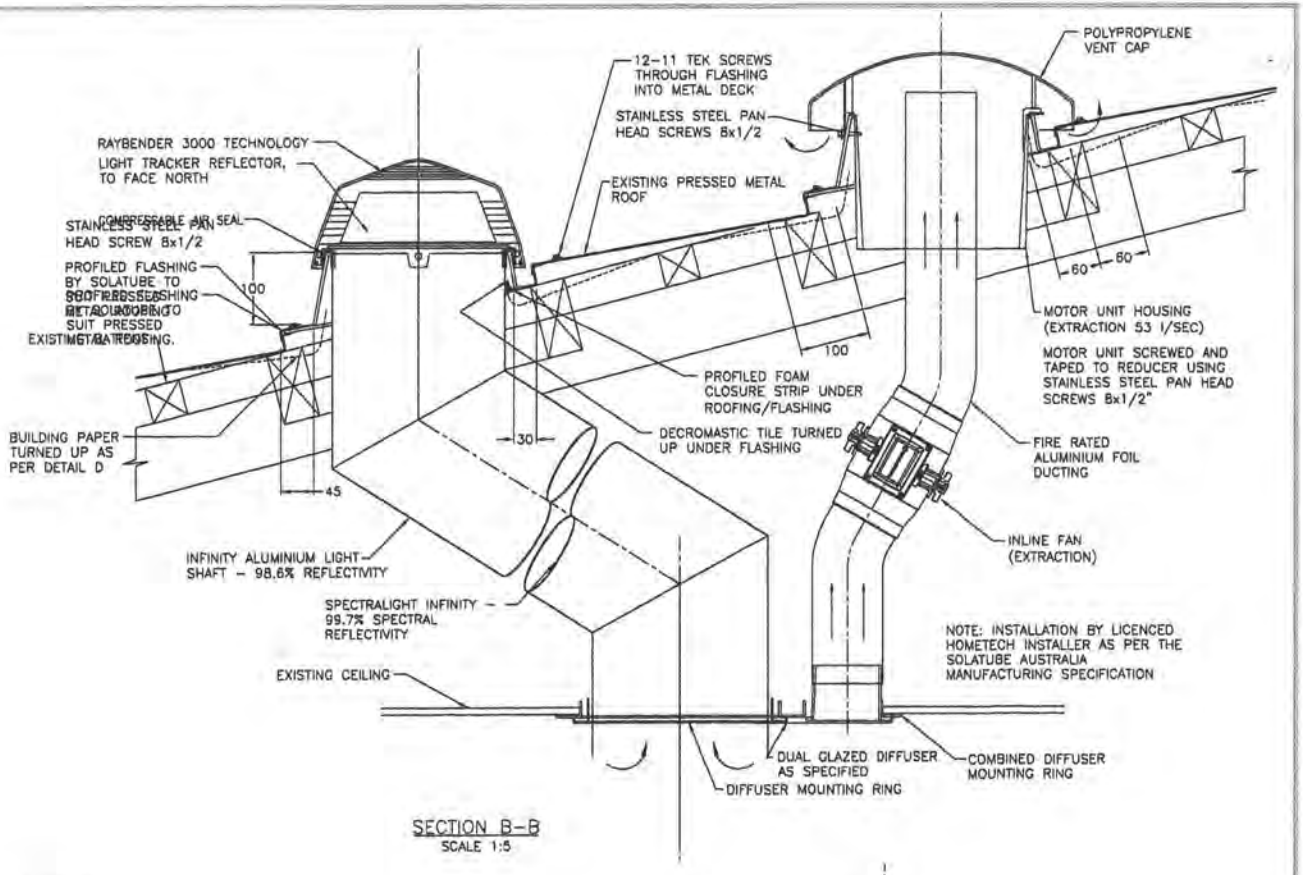

SECTION B–B
SCALE 1:5

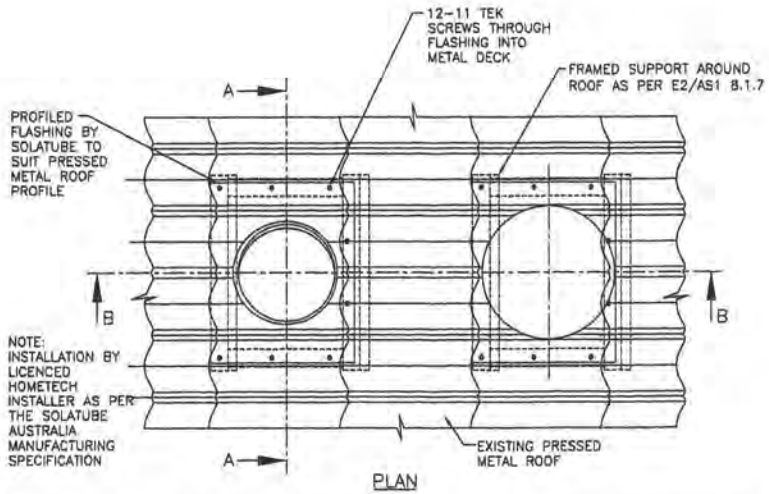

PLAN

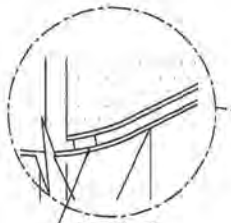

DETAIL C
N.T.S.

PROFILED FOAM CLOSURE STRIP UNDER ROOFING/FLASHING

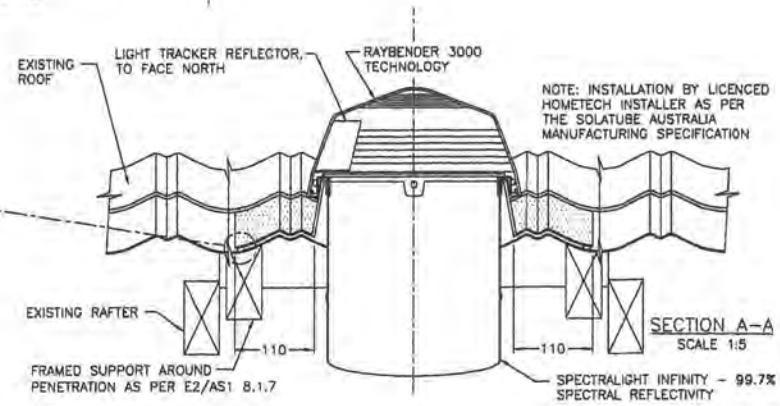

SECTION A–A
SCALE 1:5

HOMETECH
HEALTHY HOME SOLUTIONS
PHONE: 0800 466-383
WEB: www.solatube.co.nz

SOLATUBE.
Innovation in Daylighting.

SOLATUBE 160DS VENTED (250MM) TUBULAR DAYLIGHTING DEVICE (TDD)
INSTALLATION FOR PRESSED METAL ROOF e.g. DECROBOND

INSTALLATION: INSTALLED BY A LICENCED HOMETECH INSTALLER AS PER THE SOLATUBE AUSTRALIA MANUFACTURING SPECIFICATION

© 2005 HomeTech Ltd

DRAWN	PCR	REVISION	A
DATE	20/10/09	SCALE	1:5,1:10,NTS
APPROVED	PN	DWG NO.	160DS–V–D
DATE	20/10/09		

PROWOOD

Providing Superior Timber Solutions

SELECTION CHARTS

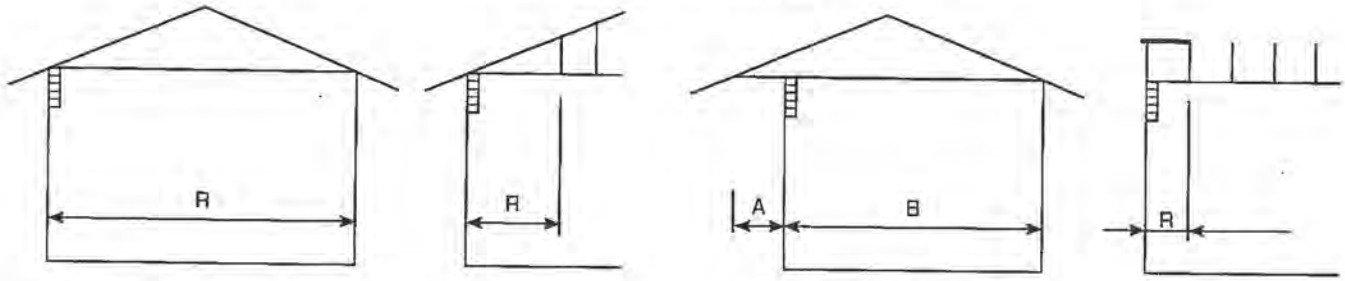

$A \leq \frac{1}{4}(A + B)$, $R = B + 2A$

PROLAM®

TABLE 1:

PROLAM® LINTELS SUPPORTING ROOF AND CEILING ONLY

		LINTEL SIZE	MAXIMUM LINTEL SPAN (m)												
			SUPPORTED ROOF SPAN 'R' (m)												
			2.0	3.0	4.0	5.0	6.0	7.0	8.0	9.0	10.0	11.0	12.0	13.0	14.0
GL8	LIGHT ROOF	PLL 150 135 x 88mm	3.25	3.00	2.80	2.60	2.40	2.25	2.15	2.05	1.95	1.85	1.80	1.75	1.70
GL8	LIGHT ROOF	PLL 200 180 x 88mm	4.15	3.95	3.70	3.45	3.20	3.00	2.85	2.70	2.60	2.50	2.40	2.30	2.25
GL8	LIGHT ROOF	PLL 250 225 x 88mm	4.90	4.60	4.40	4.30	4.00	3.70	3.50	3.40	3.20	3.10	3.00	2.90	2.80
GL8	LIGHT ROOF	PLL 300 270 x 88mm	5.60	5.30	5.10	4.90	4.70	4.50	4.30	4.10	3.90	3.70	3.60	3.50	3.30
GL8	LIGHT ROOF	PLL 350 315 x 88mm	6.30	6.00	5.70	5.50	5.30	5.10	5.00	4.70	4.50	4.30	4.20	4.00	3.90
GL8	HEAVY ROOF	PLL 150 135 x 88mm	2.75	2.50	2.30	2.10	2.00	1.85	1.75	1.70	1.60	1.55	1.50	1.45	1.40
GL8	HEAVY ROOF	PLL 200 180 x 88mm	3.65	3.35	3.05	2.80	2.65	2.50	2.35	2.25	2.15	2.05	2.00	1.90	1.85
GL8	HEAVY ROOF	PLL 250 225 x 88mm	4.50	4.10	3.80	3.50	3.30	3.10	2.90	2.80	2.70	2.50	2.40	2.40	2.30
GL8	HEAVY ROOF	PLL 300 270 x 88mm	5.30	4.90	4.50	4.20	3.90	3.70	3.50	3.30	3.20	3.10	2.90	2.80	2.70
GL8	HEAVY ROOF	PLL 350 315 x 88mm	5.90	5.60	5.30	4.90	4.60	4.30	4.10	3.90	3.70	3.60	3.40	3.30	3.20
GL12	LIGHT ROOF	PL12 150 135 x 88mm	3.65	3.40	3.20	2.95	2.75	2.60	2.45	2.35	2.25	2.15	2.05	2.00	1.95
GL12	LIGHT ROOF	PL12 200 180 x 88mm	4.55	4.30	4.10	3.95	3.70	3.45	3.30	3.15	3.00	2.85	2.75	2.65	2.60
GL12	LIGHT ROOF	PL12 250 225 x 88mm	5.40	5.10	4.90	4.70	4.50	4.30	4.10	3.90	3.70	3.60	3.40	3.30	3.20
GL12	LIGHT ROOF	PL12 300 270 x 88mm	6.20	5.80	5.60	5.40	5.20	5.00	4.90	4.70	4.50	4.30	4.10	4.00	3.80
GL12	LIGHT ROOF	PL12 350 315 x 88mm	6.90	6.60	6.30	6.00	5.80	5.60	5.50	5.30	5.20	5.00	4.80	4.60	4.50
GL12	HEAVY ROOF	PL12 150 135 x 88mm	3.10	2.90	2.65	2.45	2.25	2.15	2.00	1.95	1.85	1.75	1.70	1.85	1.60
GL12	HEAVY ROOF	PL12 200 180 x 88mm	4.10	3.85	3.50	3.25	3.05	2.85	2.70	2.55	2.45	2.35	2.25	2.20	2.10
GL12	HEAVY ROOF	PL12 250 225 x 88mm	5.10	4.70	4.30	4.00	3.80	3.50	3.30	3.20	3.00	2.90	2.80	2.70	2.60
GL12	HEAVY ROOF	PL12 300 270 x 88mm	5.89	5.50	5.20	4.80	4.50	4.20	4.00	3.80	3.70	3.50	3.40	3.30	3.20
GL12	HEAVY ROOF	PL12 350 315 x 88mm	6.50	6.20	5.90	5.60	5.20	4.90	4.70	4.50	4.30	4.10	3.90	3.80	3.70

283 Waiwhero Rd P O Box 413 Motueka New Zealand Phone 03 526 7436 Fax 03 526 7437
Email: info@prowoodnz.com

PRELIMINARY TRUSS LAYOUT WITH TRUSS FIXINGS AND LINTEL SIZES.

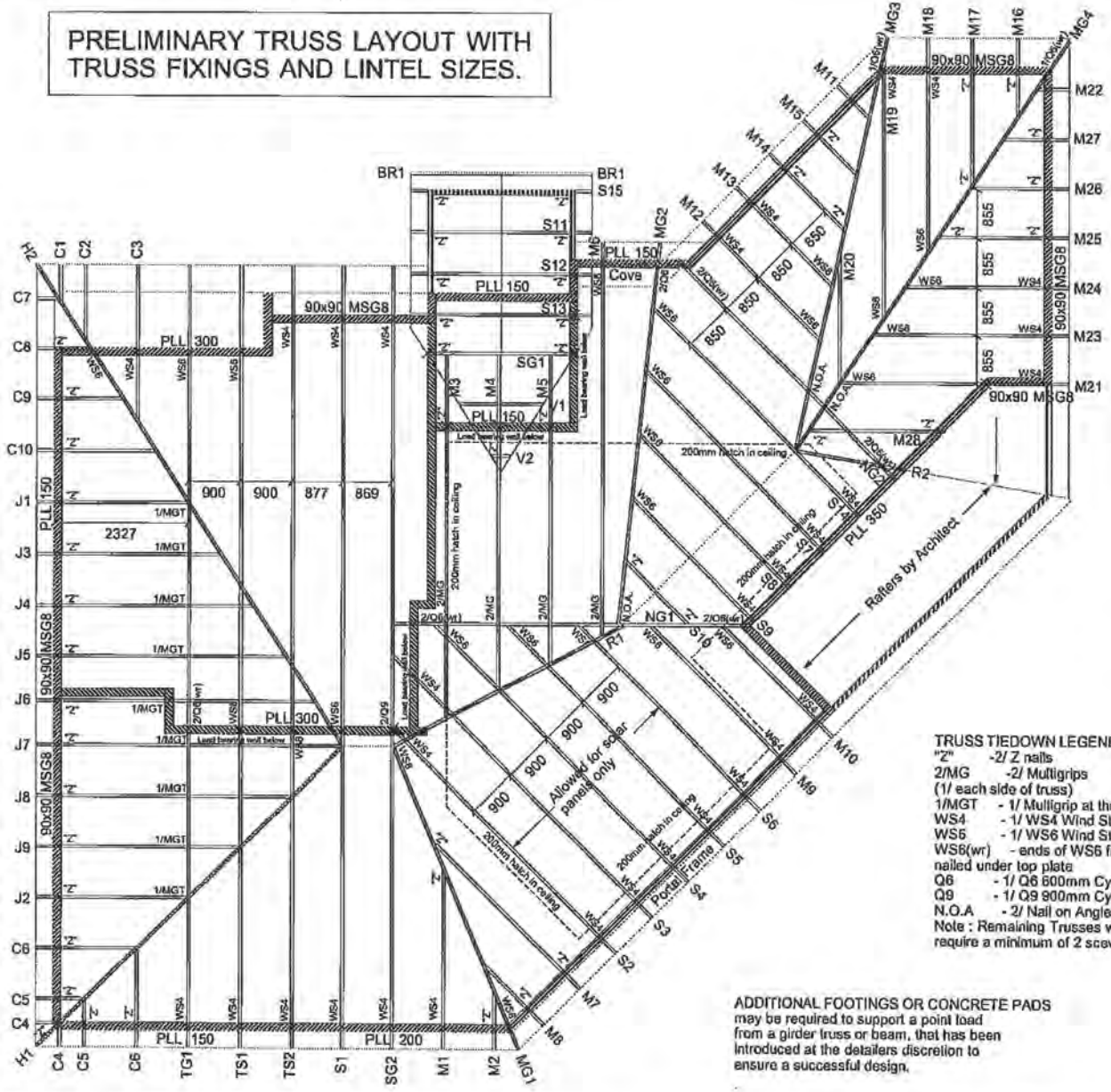

N.O.A.

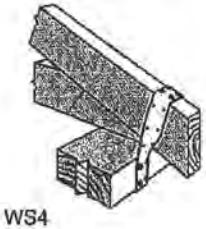

WS4

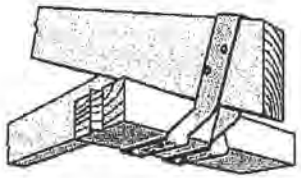

Q6

TRUSS TIEDOWN LEGEND
"Z" -2/ Z nails
2/MG -2/ Multigrips
(1/ each side of truss)
1/MGT - 1/ Multigrip at the top chord
WS4 - 1/ WS4 Wind Strap
WS6 - 1/ WS6 Wind Strap
WS6(wr) - ends of WS6 folded & nailed under top plate
Q6 - 1/ Q6 600mm Cyclone Strap
Q9 - 1/ Q9 900mm Cyclone Strap
N.O.A - 2/ Nail on Angles
Note : Remaining Trusses without fixings, require a minimum of 2 scew nails

ADDITIONAL FOOTINGS OR CONCRETE PADS may be required to support a point load from a girder truss or beam, that has been introduced at the detailers discretion to ensure a successful design.

pryda solutions

Customer : Ward House Site Address : 35 Kotare Street : Waikanae	Roofing : Corrugated Iron Pitch : 30.00 Deg. Spacing : 900 Design Wind Velocity : 50.00 m/s (Ult.) Detailer : Bruce Dyhrberg	Job Ref 4481d Scale Level

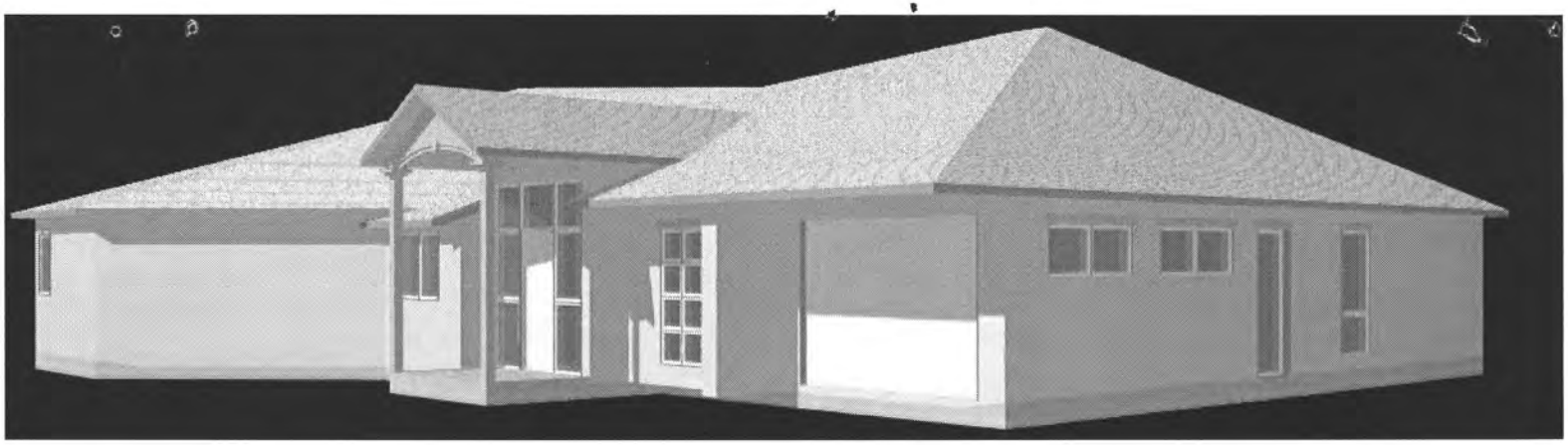

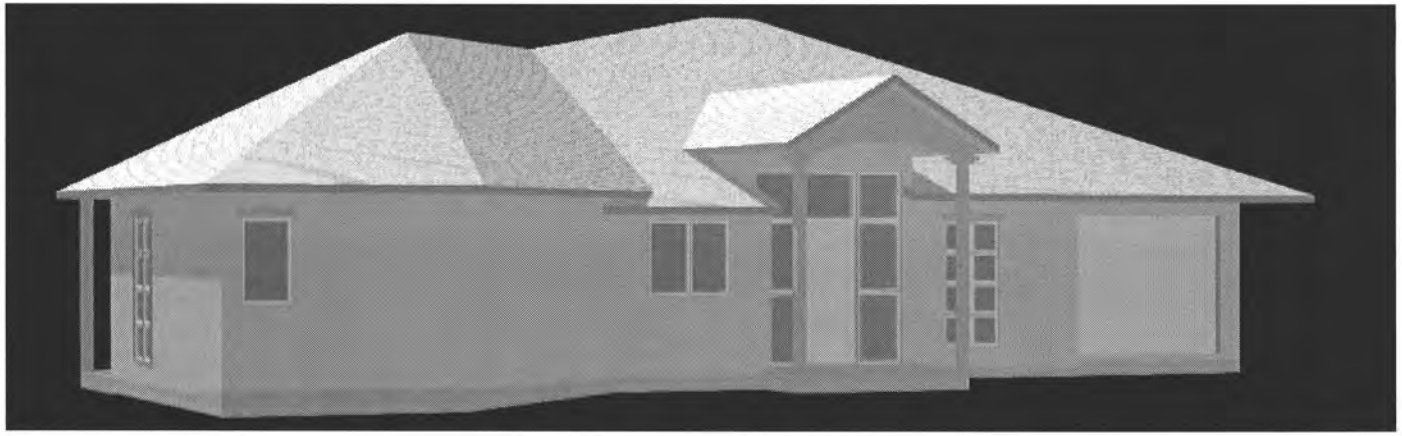

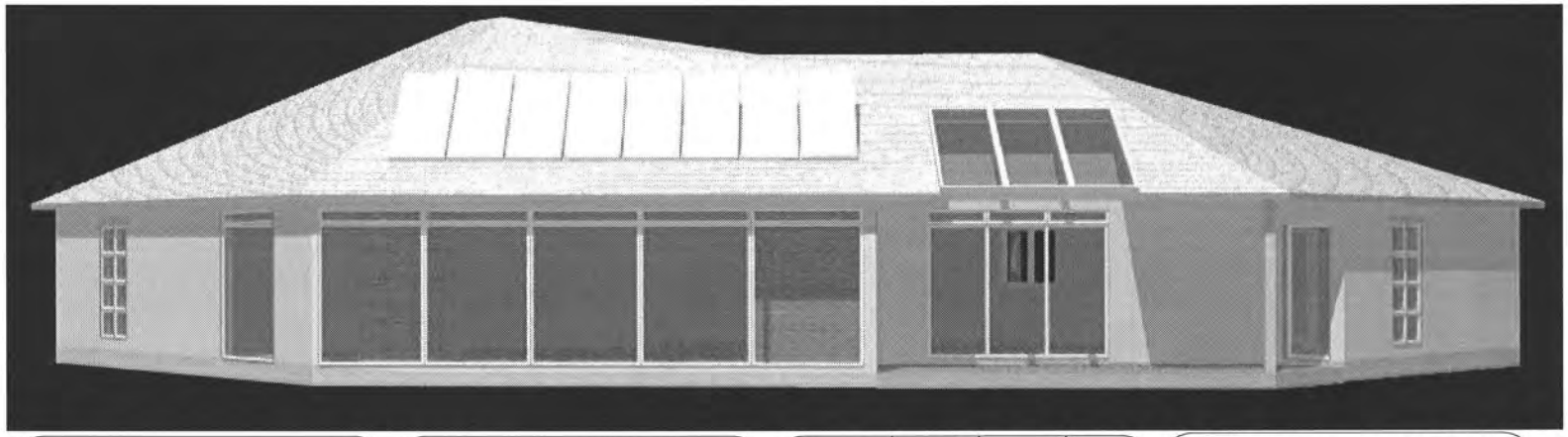

Landseer Services

PO Box 1656, Paraparaumu Beach
Tel : 04-2984192 Fax : 04-2984192
Mobile : 0274-925336
email : patrick.shaw@xtra.co.nz

Client :

Drawing :

Designed : Shaw	Checked :	Drawn : Shaw	Sheet :
Scale :	Job No :	Date :	Of :

THESE DRAWINGS HAVE BEEN PREPARED BASED ON THE KNOWLEDGE THAT THE BUILDING CONTRACTER HAS A SOUND KNOWLEDGE OF THE NZBC & NZS 3604-1999. ANY WORKS CARRIED OUT BY ANY OWNER OR BUILDER, SHALL ENSURE THAT ALL WORKS COMPLY WITH THESE CODES IN ADDITION TO THE REQUIREMENTS OF THE TERRITORIAL AUTHORITY. ANY WORKS UNDERTAKEN OUTSIDE THESE REQUIREMENTS WITHOUT THE APPROVAL OF THE DESIGNER, ENGINEER OR TERRITORIAL AUTHORITY HEREBY INDEMNIFIES THE DESIGNER OR HIS AGENT AGAINST ANY CLAIM OR CLAIMS IN RESPECT TO THE SAID WORKS

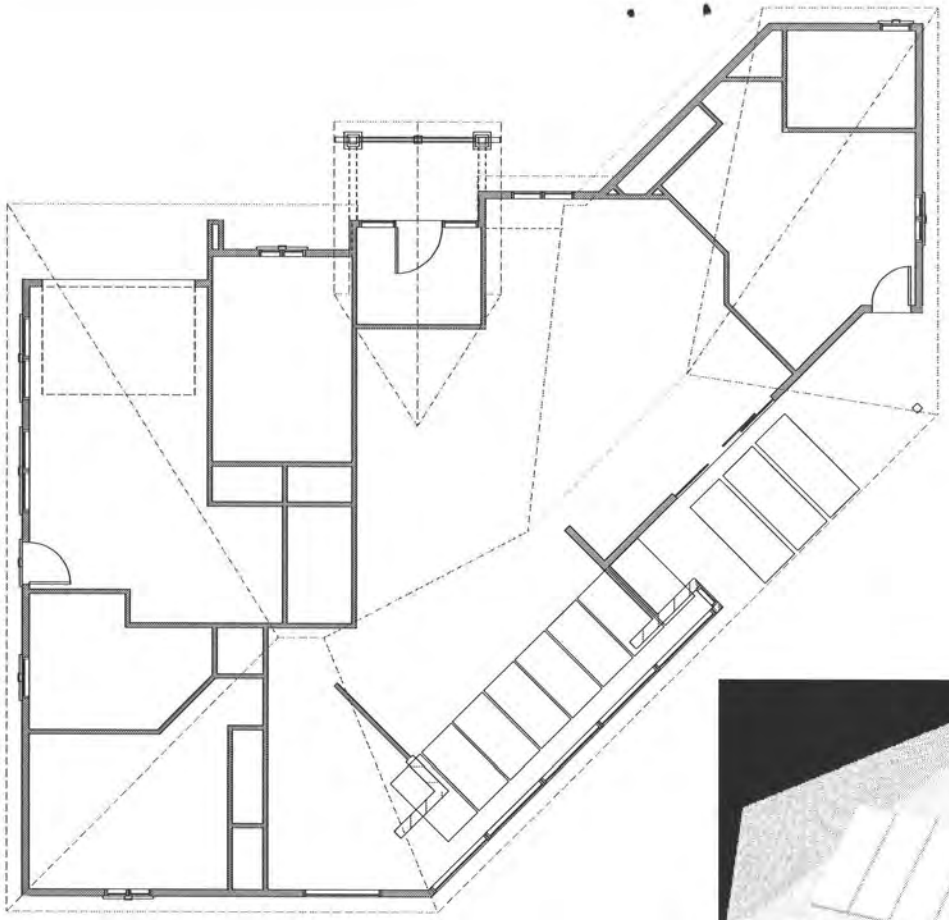

Landseer Services

PO Box 1656, Paraparaumu Beach
Tel : 04-2984192 Fax : 04-2984192
Mobile : 0274-925336
email : patrick.shaw@xtra.co.nz

Client :

Drawing :

Designed : Shaw	Checked :	Drawn : Shaw	Sheet :
Scale :	Job No :	Date :	Of :

THESE DRAWINGS HAVE BEEN PREPARED BASED ON THE KNOWLEDGE THAT THE BUILDING CONTRACTER HAS A SOUND KNOWLEDGE OF THE NZBC & NZS 3604-1999. ANY WORKS CARRIED OUT BY ANY OWNER OR BUILDER, SHALL ENSURE THAT ALL WORKS COMPLY WITH THESE CODES IN ADDITION TO THE REQUIREMENTS OF THE TERRITORIAL AUTHORITY. ANY WORKS UNDERTAKEN OUTSIDE THESE REQUIREMENTS WITHOUT THE APPROVAL OF THE DESIGNER, ENGINEER OR TERRITORIAL AUTHORITY HEREBY INDEMNIFIES THE DESIGNER OR HIS AGENT AGAINST ANY CLAIM OR CLAIMS IN RESPECT TO THE SAID WORKS

BC 110397.

FERGUSSON TANKS
FEILDING NEW ZEALAND

10500 litre Water tank

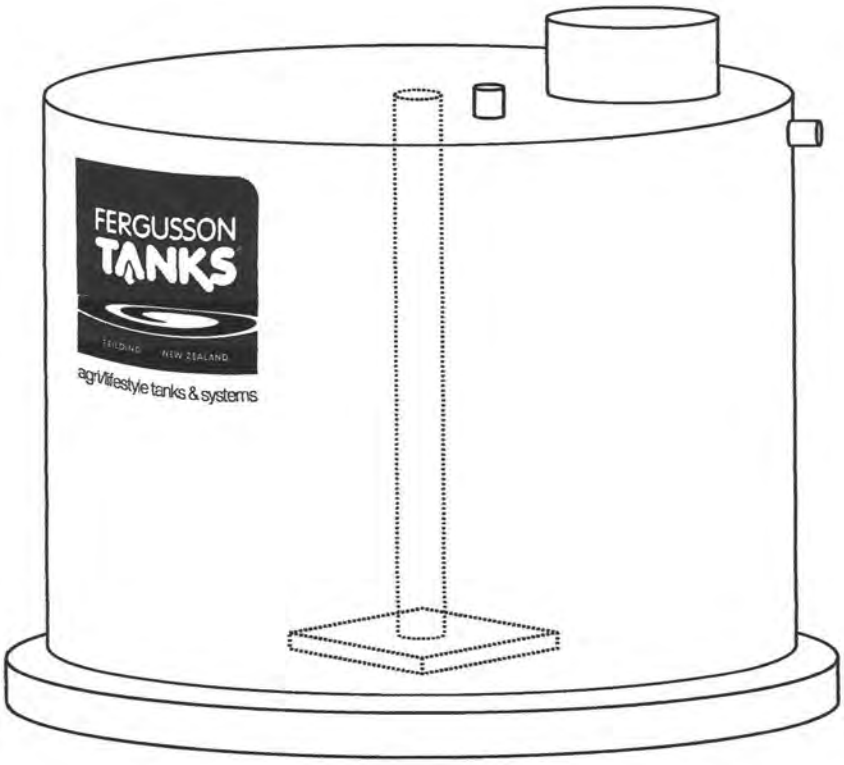

OUTSIDE DIAMETER	OUTSIDE HEIGHT
2.9m	2m

Received by
Kapiti Coast District Council
at Paraparaumu
14 JUL 2011
By Shaleen Time 11:05

$3185.50 each incl GST and 50mm fitting

Design Navigator H1 Compliance Report

Project Summary

H1 Report created by:	Designscape
Project Name:	Ward House
Client:	Ward
Lot No:	
Comment:	
Project Id:	28085
Report Date:	03/06/2011

Compliance Result

This building **complies with H1 via the following methods** :

- the Schedule Method in NZS4218:2004 (Sept 2008 R-values)
- the Calculation Method in NZS4218:2004 (Sept 2008 R-values)

H1 Compliance Details

NZS4218:2004 Schedule Method Compliance

The use of the Schedule Method is **permitted** .

In order to comply the R-values for all the construction elements must be the same or larger than the permitted minimum R-values. This design **complies** with the NZS4218:2004 Schedule Method.

Non-Solid Construction

	Permitted Minimum	*Proposed Minimum*	
Floor:	1.3	2.78	✓
Non-solid Walls:	1.9	3.99	✓
Glazing in Non-solid Walls:	0.26	0.43	✓
Roof:	2.9	4.1	✓
Skylights:	0.26		✓

If multiple solid wall types levels are used the table shows the requirements for the corresponding walls and windows in them. For solid timber and for other solid constructions two options are shown for each. But the components of these options can not be mixed, i.e. it is not permitted to use the solid timber wall R-value from option 1 and the solid timber window R-value from option 2.

H1 Compliance Details

NZS4218:2004 Calculation Method Compliance

The use of the Calculation Method is **permitted** .

In order to comply the Actual Heat Loss must be the same or smaller than the Reference Heat Loss AND all component R-values must be the same or larger than 60% of the R-values in the '60% Rule' table below. This design **complies** with the NZS4218:2004 Calculation Method.

Heat Loss:	*Reference building*	*Proposed building*
	427	213

Minimum R-values ("60% rule"):

	Permitted Minimum	*Proposed Minimum*	
Floor:	0.8	2.78	✓
Non-solid Walls:	1.1	3.99	✓
Glazing in Non-solid Walls:	0.15	0.43	✓
Roof:	1.7	4.1	✓
Skylights:	0.15		✓

The Reference building has the following areas and R-values.

				Non-solid	Solid Timber	Other Solid
				100.0 %	0.0 %	0.0 %
Floor:	Area:	154.7 m²	R-values:	1.3	1.3	1.5
Walls excl. glazing:	Area:	117.1 m²	R-values:	1.9	1.2	1
Glazing (up to 30%):	Area:	50.2 m²	R-values:	0.26	0.26	0.26
Roof:	Area:	154.7 m²	R-values:	2.9	3.5	3.5
Skylights:	Area:	0 m²	R-values:	0.31	0.31	0.31
Heat Loss:				427	454	457

For mixed constructions the heat loss of the reference building is calculated as the sum of the heat losses for each type of wall construction multiplied by the fraction of the wall area of each type. This approach is based on clause 4.2.6 of NZS4218:2009 because NZS4218:2004 has no clear guidance on mixed constructions. Note that all other requirements (window area (30%) and skylight area (1.2m²) threshold for Schedule Method, maximum R-value tradeoff (40%), etc.) are still using NZS4218:2004 including the 2007 H1 amendments because this is the Acceptable Solution for Clause H1.

Compliance with Clause E3

This building **complies with the R-value targets in NZBC Clause E3** .

Component	*Minimum R-value*	*Project R-value*
Framed wall constructions with cavities	1.5	3.99
Single skin masonry wall without a cavity	0.6	
Solid timber wall no less than 60 mm thick	0.6	
Roof or ceilings	1.5	4.1

Design Details

Building Dimensions

Floor Area	154.7
Gross Wall Area	167.3
Net Wall Area	130.1
Wall (North) Area	29.3
Wall (East, South and West) Area	100.8
Gross Roof Area	154.7
Net Roof Area	154.7
Glazing Area	37.2
Window (North) Area	26.3
Window (East, South and West) Area	10.9
Skylight Area	0

Glazing Area Percentages

Total Glazing Percentage	22.2%
East, South and West Window Percentage	9.8%
Total over 30%	no
East, South and West over 30%	no
Total over 50%	no

Information required for BPI calculation

Living Floor Area	0	Note: This includes also internal floors.
Average Room Height	0	
Thermal Mass Level	Light weight	Suspended timber floor with timber framed walls or a heavily carpeted slab floor with timber framed walls.

Climate

Location	Paraparaumu
Climate Zone	2

- ***Heat Loss Details***

	ID	Orient.	Width	Height	Gross Area	Net Area	R-value*	Heat Loss	Shad. Coeff.**	Solid Wall***
Floors										
Floor 1	dwelling				154.7	154.7	2.78	55.6		
Walls										
Wall 1	north 1	North	8	2.4	19.2	14	3.99	3.5		C
Window 1-1	W1		.9	1.8		1.6	.43	3.8		
Window 1-2	W2		2	1.8		3.6	.43	8.4		
Wall 2	north 2	North	8	2.4	19.2	5.3	3.99	1.3		C
Window 2-1	W3		7.7	1.8		13.9	.43	32.2		
Wall 3	north 3	North	6	2.4	14.4	7.2	3.99	1.8		C
Window 3-1	W4		3.6	2		7.2	.43	16.7		
Wall 4	north 4	North	1.14	2.4	2.7	2.7	3.99	0.7		C
Wall 5	east 1	East	2.27	2.4	5.4	5.4	3.99	1.4		C
Wall 6	east 2	East	4.43	2.4	10.6	10.6	3.99	2.7		C
Wall 7	east 3	East	1	2.4	2.4	2.4	3.99	0.6		C
Wall 8	east 4	East	.5	2.4	1.2	1.2	3.99	0.3		C
Wall 9	east 5	East	6	2.4	14.4	13.4	3.99	3.4		C
Window 9-1	W5		.8	1.2		1	.43	2.2		
Wall 10	south 1	South	6.45	2.4	15.5	15.5	3.99	3.9		C
Wall 11	south 2	South	2.8	2.4	6.7	6.7	3.99	1.7		C
Wall 12	south 3	South	7.36	2.4	17.7	10.6	3.99	2.7		C
Window 12-1	W6		.9	1.8		1.6	.43	3.8		
Window 12-2	W7		2.1	2		4.2	.43	9.8		
Window 12-3	W8		1.2	1		1.2	.43	2.8		
Wall 13	south 4	South	5	2.4	12	12	3.99	3		C
Wall 14	south 5	South	3	2.4	7.2	6.6	3.99	1.7		C
Window 14-1	W9		.6	1		0.6	.43	1.4		
Wall 15	west 1	West	5.64	2.4	13.5	11.9	3.99	3		C
Window 15-1	W10		.9	1.8		1.6	.43	3.8		
Wall 16	west 2	West	2.1	2.4	5	4.3	3.99	1.1		C
Window 16-1	W11		.4	1.8		0.7	.43	1.7		
Roofs										
Roof 1	roof		154.7	1	154.7	154.7	4.1	37.7		
Total Heat Loss								212.7		

* Any slab floor regardless of its dimensions can be assumed to have an R-value of at least R-1.3 (H1/VM1 and H1/AS1, Replacement Table 1, Note (4)).
** The Shading Coefficient is only required for BPI calculations.
*** C: Cavity Construction (any construction that is not solid), T: Solid Timber, S: Other Solid Construction (Note that the use of solid timber and other solid construction types is discretional, i.e. solid timber walls and other solid walls can be treated as if they are non-solid

(NZS4218:2004 section 3.1.4.).)

Floor Construction Details

1 Slab floor

internal surface 0.09

Flooring none (Example: polished surface of a concrete floor)

R-value: 0

Insulation value of the slabfloor

Slab floor area [m²]:	154.7			
Perimeter length [m]:	70.35			
External wall thickness [mm]:	.3			
Soil conductivity [W/m °C]:	1.2			
Underslab insulation:	Total slab	Expol Thermaslab (H) R-2.8 Concrete Slab:	2.8	
Slab edge insulation:	External	Expol Thermaslab (S) R-1.3 Concrete Slab:	1.3	

R-value: 2.69

2.78 m²K/W.

Wall Construction Details

1 Timber frame with vented cavity and insulated cladding

external surface 0.03

Cladding | 60mm EPS (R1.66) with plaster finish
R-value: 1.66

Insulation |

15-90mm vented cavity (all R-values on ext. side of cavity will be halved), R: 0.08

Air Barrier | Building paper
R-value: 0.01

Timber Frame & Cavity | 144mm, studs @ 600mm, no dwangs

Frame Area: 11.4%

Timber Frame
R-value: 1.19

Cavity Area: 88.6%

Insulation | 3.6

still Airgap

none
R-value: 0

Wall Lining | Gypsum plasterboard 10mm
R-value: 0.04

internal surface 0.09

3.99 m²K/W.

Roof Construction Details

1 Timber framed roof, flat ceiling

external surface 0.03

Roofing | Metal tiles with building paper

R-value: 0.01

Roof space (still air) 0.11

Insulation

Timber Frame & Cavity

125mm rafters or joists @ 400mm, battens (covered with insulation)

Frame Area: 11.8% *Cavity Area: 88.2%*

Trusses and dwangs
R-value: 1.03

Insulation | 6

Ceiling Lining | Gypsum plasterboard 10mm

R-value: 0.04

internal surface 0.09

Recessed downlights

Ceiling area [m²]: Number of downlights: Clearance from lamp holder side [m]:

4.1 m²K/W.

Terms and Conditions . Contact . Home

This tool was created by Design Navigator Ltd.