move.

council records

3/3 bulteel street
new plymouth

Statement of Passing Over:

This information has been supplied by the vendor or the vendor's agents and move (powered by ownly Ltd licensed REAA 208) is merely passing over this information as supplied to us. We cannot guarantee its accuracy as we have not checked, audited, or reviewed the information and all intending purchasers are advised to conduct their own due diligence investigation into this information. Where you have been supplied with a Council Property File or a LIM Report, please note there may be matters relating to pre-1992 consents or permits in this file which may need further investigation in order to determine their relevance. To the maximum extent permitted by law we do not accept any responsibility to any party for the accuracy or use of the information herein.

- Natural Source
- Treatment Plant
- Pumpstation
- Storage Unit
- Hydrant
- Manhole
- Alert Valve
- Air Valve
- Non-Return Valve
- Standard Valve
- Manifold Valve
- Backflow
- Meter
- Restricted Flow
- Wellup
- Inlet
- Outlet
- Soakhole
- End Point
- Node
- Misc Point
- Trunk
- Rise
- Main
- Lateral
- Open Drain
- Stream
- Overland Flow Path
- Misc Polygon
- Proposed Bund and Ponding Areas
- Storm Water Mgmt Plan

Yellow = Privately Owned

Grey = Out of Service/Closed

Stormwater

Water Supply

Waste Water

Te Kaunihera-ā-Rohe o Ngāmotu
New Plymouth District Council

COPYRIGHT: Cadastral information sourced from Land Information New Zealand data. Crown Copyright Reserved.

DISCLAIMER: NPDC assumes no responsibility for the completeness or accuracy of the data displayed on the plot. To be used for indicative purposes only.

HORIZONTAL DATUM
New Zealand Geodetic Datum 2000

MAP PROJECTION
New Zealand Transverse Mercator

0 5 10 20
m

MILES Print Map

Date: 2/10/2025

1:282

17 Images

BUILDING CONSENT

44425A

PROPERTY ID 015556

44425A

Document Set ID: 609007
Version: 1, Version Date: 16/10/2002

New Plymouth District Council Printed:06Jun02 Page 1

COVER SHEET

015556

Application No: 44425 Date Received: 06/06/02
Related: PIM Application No: 44424 Area: B DUGGAN

Name: JUDD, Andrew Mark
Address: 3 BULTEEL STREET
NEW PLYMOUTH 4601

Lot: 1
DP: 10451
Property ID:047263

Assessment:

Action No	Action	Estab	Date Returned		
1	Receive Information	BUILDING			
10	Building Act Compliance	BUILDING			12.6.02
50	Final Approval	BUILDING			
E=N=D==O=F==R=E=P=O=R=T====E=N=D==O=F==R=E=P=O=R=T=E=N=D==O=F==R=E=P=O=R=T====					
			More Info Required	Applicant Phoned	Application Correct

Fire

No Green

Drainage Plans Enclosed Yes/No

Plans Taken Yes/No

RECEIVED
- 7 JUN 2002

Approved 12.6.02

Not Approved

Document Set ID: 609007
Version: 1, Version Date: 16/10/2002

Document Set ID: 609007
Version: 1, Version Date: 16/10/2002

Plumbing & Drainage/Building/Environmental Health/Hazardous Substances

Engineering

PIM Information to be sent

- [ ] Grease Trap
- [ ] Septic Tank
- [ ] Septic Tank LI
- [ ] Sewer Pump
- [ ] Swimming Pool
- [ ] Noise Control
- [ ] Demolition
- [ ] Rural Fire

- [ ] Building Business
- [ ] WOF Poster
- [ ] Compliance Schedule
- [ ] BRANZ Advisers
- [ ] Building Magazine Sub
- [ ] Electrical Safety
- [ ] Playground Checklist
- [ ] Minimum Standard of Application

BIA Guides

- [ ] 1. How it works
- [ ] 2. New terms and procedures
- [ ] 3. Getting approval
- [ ] 4. Acceptable solutions
- [ ] 5. Compliance schedules
- [ ] 6. Building WOF - Responsibility and liability of Building owners
- [ ] 7. The Building Industry Authority Levy

Other

NPDC Inspection Notice

Phone - 7596060 Fax - 7596118 Pursuant to Building Act 1991

Priority 2

Call Number	ED532	Location	3 BULTEEL STREET
Title			
Customer	SPENCER LISTER	Area	NEW PLYMOUTH
Phone	0252307578		
Customer Address			

Subject

Division	Building	Order Number	44425
Service	Inspection	Property ID	
Classification	Request		

AUTHORISED OFFICER:- DATE:- 05-08-02 TIME:- 1050

Comments

15:33 - 30/07/02 - JANE BLINKHORNE

FINAL RECHECK - THURSDAY AM. PHONE FIRST FOR ACCESS.

LOG FIRE AND FLUE INSTALLATION IS NOW COMPLETE & SATISFACTORY.

APPROVED FOR ISSUE OF CODE COMPLIANCE CERTIFICATE.

NOTICE LEFT IN OWNERS MAIL BOX.

16-Jul-2002 08:37

NPDC Inspection Notice

Phone - 7596060 Fax - 7596118 Pursuant to Building Act 1991

Priority 2

Call Number	**EC756**	Location	**3 BULTEEL STREET**
Title			
Customer	**ANDREW JUDD**		
Phone	**7589028**	Area	**NEW PLYMOUTH**
Customer Address			

Subject

Division	**Building**	Order Number	**44425**
Service	**Inspection**	Property ID	
Classification	**Request**		

AUTHORISED OFFICER:- DATE:- 22-07-02 TIME:- 13~~9~~

Comments

08:14 - 16/07/02 - MELISSA DEVINE

FINAL FIRE
ASAP
BTWN 8:00 - 8:40AM ANY AM
RING TO CONFIRM TIME
AOC ATTACHED

MONDAY P.M. PHONE @ 1-ISH TO ARRANGE TIME.

* PLEASE SECURE THE FIRE BOX TO THE HEARTH.

ALL OTHER INSTALLATION IN ACCORDANCE WITH THE MANUFACTURERS DATA.

PLEASE NOTIFY COUNCIL WHEN COMPLETED.

PHONE SPENCER LISTER - FLUE TO BE 600mm ABOVE THE RIDGE ALSO.

* PHONED SPENCER 0840 23/07/02 TO ADVISE

EC756.

NEW PLYMOUTH DISTRICT COUNCIL
newplymouthnz.com

RECEIVED
15 JUL 2002

ADVICE OF COMPLETION OF BUILDING WORK

SECTION 43(1) - BUILDING ACT 1991

Under Section 43 of the Building Act 1991 the owner of a building is required to notify us when the work has been completed to the extent required by a Building Consent. Upon completion of the work please complete this form and return it to the New Plymouth District Council in the postage paid envelope attached.

On receipt of the form the Council will, if it is satisfied that the work complies with the Building Code, issue a Code of Compliance Certificate. Where any work is found not to comply a Notice to Rectify will be issued.

The Code of Compliance Certificate is an important part of the building process as well as being required by law it helps determine that not only has the work been completed but it also complies with the requirements of the Building Act.

Depending on the extent of the work covered under the Building Consent it may be necessary to make arrangements to obtain access to the site or building.

Under Building Consent No: 44425

Owner Details

Name Andrew Mark Judd.

Phone No's 7589028 Work 7587827 Home _____ Mobile _____

Mailing Address P.O. Box 8057 New Plymouth

Final inspection required: (Day/Date) between 8.00 am & 8.40 any AM / PM

(You will be contacted on the day of your inspection to confirm) morning

Project Location

Street Address 46 A Robe St, NP,

(Cross each applicable box and attach relevant documents)

You are hereby advised that:

- [x] All
- [ ] Part only as specified in the attached particulars of the building work under above Building Consent is believed to have been completed to the extent required by that Consent

You are requested to issue:

- [x] A Final
- [ ] An Interim

Code Compliance Certificate accordingly (except where a Code Compliance Certificate has been issued by a Building Certifier see below)

The attached particulars include:

- [ ] Building Certificates
- [ ] Producer Statement
- [ ] A Code Compliance Certificate issued by a Building Certifier

FORMAL DECLARATION – (Please read carefully prior to signing)

This request for CCC is made by me as owner of the property.

Signature: [signature] ***Date:*** 10/7/02

or I am the applicant and have been authorised by the owner to make this request for CCC

Signature: _____ ***Date:*** _____

Document Set ID: 609007
Version: 1, Version Date: 16/10/2002

Project Information Memorandum No:44424
Section 31, Building Act 1991

Issued:12Jun02

OWNER : MR Andrew Mark JUDD
C/O MICHAEL BROWNING
P O BOX 8057
NEW PLYMOUTH 4615

Application received: 06Jun02

PROJECT LOCATION

Street Address: 3 BULTEEL STREET, NEW PLYMOUTH 4601
Property ID: 047263
Assessment No:
Legal: LOT 1 DP 10451

PROJECT

The project is for Additions
Intended Use(s): residential heating
Intended life: Indefinite but not less than 50 years
Value of Work: $1,800.00

COUNCIL CHARGES

The Council's total charges payable on the uplifting of this project memorandum in accordance with the attached details, are: $0.00

1: WHAT IS A PIM?

Section 31 to the Building Act 1991 requires that the Council provides a PIM prior to (or as part of) the issue of a Building Consent.
This PIM or "Project Information Memorandum" is a statement by the Council of the known information about the property to the extent it is relevent to the intended "project".
It will usually include other information stating or giving guidance as to the extent of compliance with the Building Act and the District Plan.
However these comments will be limited to the extent and accuracy of the information provided. A Certificate of Compliance under the Resource Management Act 1991 should be sought where confirmation that the proposed

Document Set ID: 609007
Version: 1, Version Date: 16/10/2002

use complies is required.

2: CAN BUILDING WORK PROCEED?

YES- This PIM consent confirms that the proposed building work may be undertaken subject to the conditions of the accompanying Building Consent and any relevent provisions of the Building Act 1991.

3: Compliance with Building Code:
This section of the PIM identifies areas of non compliance with the Building Code (if any) apparant from the information provided. It is not intended to be a full check for compliance.

The project appears to comply with the Building Act based upon the extent of the information provided.

Although it is not a requirement under the NZBC for a replacement logfire, it is recommended that a tempering valve be fitted to the hot water cylinder when an existing wetback or water boosting facitily is being used.

Some reconditioned wood heaters are being offered for sale around New Zealand. Any reconditioning work is an alteration of the appliance from its original specification and hence, unless the reconditioner has obtained a test report to N.Z.S. 7421:1990 on their modified fire, it is classed as an untested appliance under the terms of N.Z.S. 7421:1990. The use of Installation Instructions and clearances issued by the manufactures with these reconditioned appliances is NOT permissible.

4: Additional Information

Your attention is drawn to the provisions of Section 41 to the Building Act 1991 which sets limits on the time that a Building Consent remains valid if work is not progressing.

The Section reads:

(1) A Building Consent shall lapse and be of no effect if -

(i) The building work concerned has not been commenced within 6 calender months after the date of issue of the consent or within such further period as the Territorial Authority in its absolute discretion may allow; or

(ii) Reasonable progress on the building work has not been made within 12 calender months after work has commenced or within such further period as the Territorial Authority at its absolute discretion may allow.

Your attention is also drawn to section 9 of the Building Act 1991 which in effect requires that the owner/applicant pay the fees within a reasonable time so that the Building Consent may be issued.

Under normal circumstances the Council considers "within reasonable time" to be no greater that one calender month from the date that the consent was

Document Set ID: 609007
Version: 1, Version Date: 16/10/2002

granted otherwise any delay beyond that may result in cancellation of the application.

5: Sign Off

Authorised Officer.....

Date.../.../....

Document Set ID: 609007
Version: 1, Version Date: 16/10/2002

Building Consent No:44425
Section 35, Building Act 1991

Issued:12Jun02

OWNER : MR Andrew Mark JUDD
C/O MICHAEL BROWNING
P O BOX 8057
NEW PLYMOUTH 4615

Application received: 06Jun02

PROJECT LOCATION

Street Address: 3 BULTEEL STREET, NEW PLYMOUTH 4601
Property ID: 047263
Assessment No:
Legal: LOT 1 DP 10451

PROJECT

The project is for Additions
Intended Use(s): residential heating
Intended life: Indefinite but not less than 50 years
Value of Work: $1,800.00

COUNCIL CHARGES

The Council's total charges payable on the uplifting of this building consent in accordance with the attached details, are: $0.00

Receipt number: 1700912 Date: 07Jun02 Amount: $121.00

1: CONDITIONS APPLYING TO THIS BUILDING CONSENT:

There are no special conditions applying to the issue of this Building Consent.

2: Additional comments regarding this Building Consent:

No additional comments.

3: CONDITIONS OF ISSUE:

Document Set ID: 609007
Version: 1, Version Date: 16/10/2002

This Building Consent is issued under the Building Act 1991. The project may be undertaken in accordance with the approved plans, specifications and any conditions specified. Duties and responsibilities under this or any other Act are unaffected by this consent.

This consent does not imply approval as to the use of the building in terms of the District Plan although every effort has been made to bring to your attention any obvious problems in this respect. Confirmation of the compliance of the activities within the site or buildings can be sought by making an application to the Council for a Certicate of Compliance under the provisions of Section 139 to the Resource Management Act 1991.

4: LAPSE & CANCELLATION OF CONSENTS

Your attention is drawn to the provisions of Section 41 of the Building Act 1991 which sets limits on the time that a Building Consent remains valid if work is not progressing.

The Section reads:

(1) A Building Consent shall lapse and be of no effect if-

(i) The building work concerned has not been commenced within 6 calender months after the date of issue of the consent or within such further period as the Territorial Authority in its absolute discretion may allow; or

(ii) Reasonable progress on the building work has not been made within 12 calender months after work has commenced or within such further period as the Territorial Authority at its absolute discretion allow.

Authorised Officer .....

Date .../.../...

Document Set ID: 609007
Version: 1, Version Date: 16/10/2002

APPLICATION No. 44424 / 44425

NEW PLYMOUTH DISTRICT COUNCIL

PLANNING & ENVIRONMENTAL SERVICES DEPARTMENT

PRIVATE BAG 2025 NEW PLYMOUTH 4260: PHONE 06 759 6060 FAX 06 759 6118

APPLICATION FOR BUILDING CONSENT AND/OR PROJECT INFORMATION MEMORANDUM (PIM)

Application Type: Tick Boxes Where Appropriate

Combined Building Consent & PIM ☑

Building Consent Only* Quote PIM Number _____ ☐

* A PIM is required before a building consent can be issued

Project Information Memorandum Only ☐

Plan and Specification Confidentiality ☐
(not available for minor buildings)

FOR OFFICE USE Parcel ID ~~047266~~ 047263 Scale Code DFP1

DETAILS OF PROPERTY TO WHICH THIS APPLICATION APPLIES:

SITE ADDRESS: ~~56 A~~ ~~Rose Street~~

Street No. Street

Or Flat 5 3 Butteel St, NP.

Town/District

Lot: Flat 5 DP: 10636

or Section No. District:

OWNER'S NAME Andrew Mark Judd. — 110728

Surname or company name

B

OWNER'S POSTAL ADDRESS - if different from 'SITE ADDRESS'

[redacted] Box 8057

Street No. Street/PO /Private Bag

New Plymouth.

Town/District

APPLICANT'S DETAILS (Second Person):

Tick this box if the applicant is the owner ☐

If the applicant ***is not*** the owner, please give applicant details:

Surname

First Names

Company name

1.45

TNL P&G – 48516

Document Set ID: 609007
Version: 1, Version Date: 16/10/2002

MAIL ADDRESS FOR ALL CORRESPONDENCE RELATING TO THIS APPLICATION

NAME: Michael Browning
Surname or company name

First names

ADDRESS: Box 8057
Street No. Street/PO /Private Bag

New Plymouth
Town/District

PHONE: 06 7589028. FAX: 06 7596192
STD STD

DESCRIPTION OF BUILDING WORK AND USE:
Description e.g. garage, deck, dwelling, shop, plumbing and drainage, sewerage connection

install (log burner) wood fire

USE - if different from description

TYPE OF WORK:

Alteration ☑ Addition ☐ Demolition ☐ Plumbing and Drainage Only ☐

Relocation ☐ Change of Use ☐ New Building ☐

TOTAL COST OF PROJECT:

$ 1800 • 00 Inc GST

TOTAL COST OF PLUMBING & DRAINAGE:

$ • 00 Inc GST

PROJECT DETAILS: Category of Work

Domestic ☑ Farm ☐

Commercial ☐ Industrial ☐

AREA OF NEW BUILDING WORK:

m²

INTENDED LIFE OF BUILDING:
(Under the Building Act all buildings shall have a minimum life of 50 years unless specified)

Less than 50 years ☐

50 years or more ☐

Specify intended life years

FORMAL DECLARATION - (Please read carefully prior to signing)

*This application to carry out **new** building works is made by me as **owner** of the property.*

Signature: Date: 5/6/02

***OR** I am the applicant **authorised by the owner** to make this application for **new** building works*

Signature: M A Browning Date: 5/6/02

NEED HELP? PLEASE REFER ANY QUERIES REGARDING THIS APPLICATION TO:

BUILDING CONSENTS SECTION, Phone (06) 759 6060 Fax (06) 759 6118

Document Set ID: 609007
Version: 1, Version Date: 16/10/2002

Private Bag 2006 TPO
Taupo, New Zealand.
Tel: 07-374 8021 Fax: 07-374 8485
Toll Free Phone: 0-800 800 186

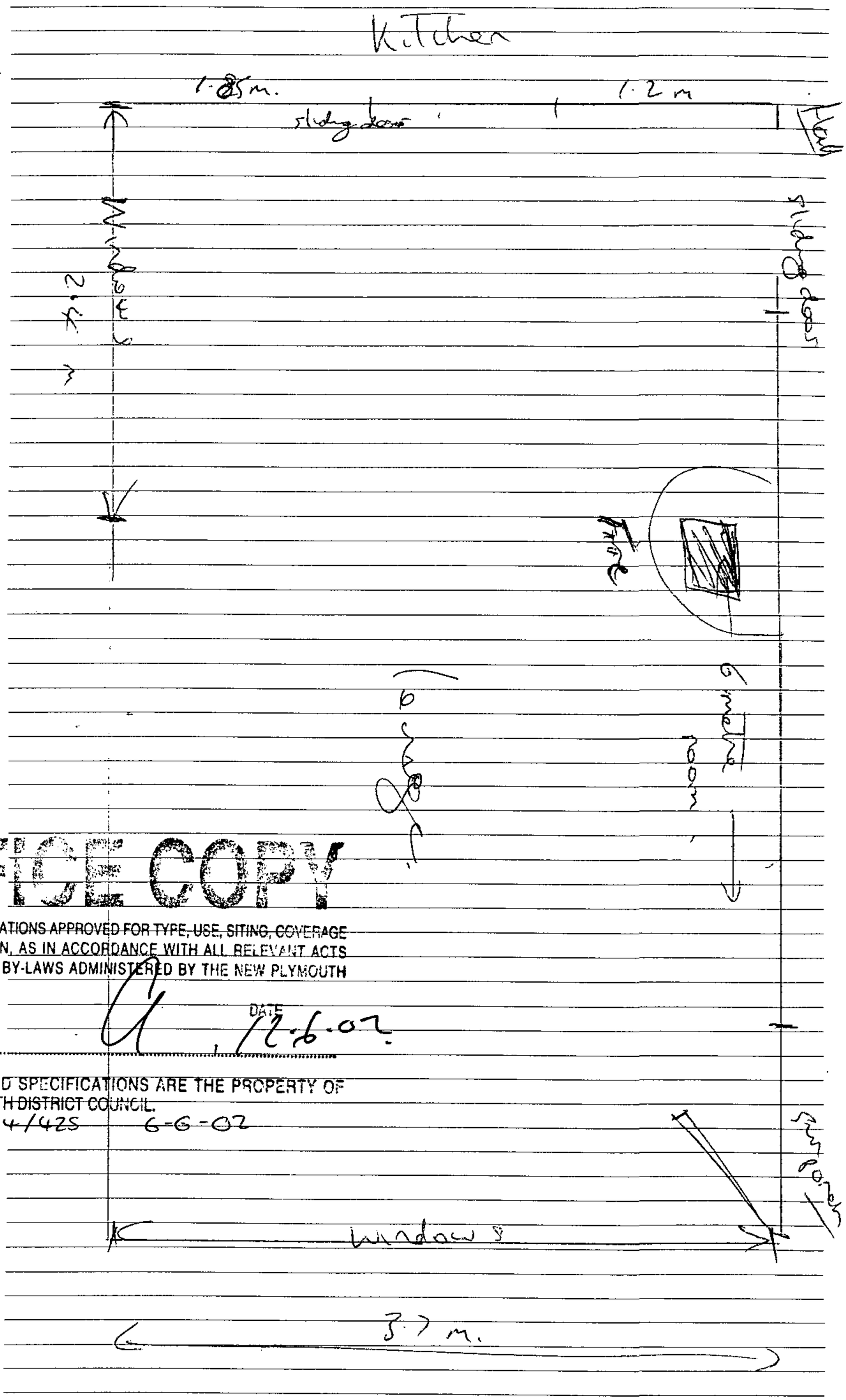

OFFICE COPY

PLANS AND SPECIFICATIONS APPROVED FOR TYPE, USE, SITING, COVERAGE AND CONSTRUCTION, AS IN ACCORDANCE WITH ALL RELEVANT ACTS REGULATIONS AND BY-LAWS ADMINISTERED BY THE NEW PLYMOUTH DISTRICT COUNCIL.

APPROVED: ..... DATE 12.6.02

THESE PLANS AND SPECIFICATIONS ARE THE PROPERTY OF THE NEW PLYMOUTH DISTRICT COUNCIL.

44474/425 6-6-02

WAIRAKEI RESORT

Document Set ID: 609007
Version: 1, Version Date: 16/10/2002

METRO

Technical Details

All Metro woodfires are tested to NZS-7421 and AS-2918. Specifications and clearances detailed below apply to both standard and Ef Series Metros. Specifications may alter and those detailed below should be used only as a guide. Refer to the installation and operation manual supplied with every Metro, or if in doubt, consult your Metro retailer.

SPECIFICATIONS	Width	Depth	Height	kW-(1)	kW-(2)
TINY-TRAD	490	530	665	N.A	11.0
PIONEER & PIONEER TRAD	590	530	665	14.6	14.4
PIONEER REAR OUTLET	590	530	660	N.A	N.A
X-TREME & X-TREME TRAD	670	575	715	17.7	14.2
ASPIRE & ASPIRE TRAD	670	575	715	19.8*	15.6
WEE-RAD	607	530	665	14.6	14.4
RAD	750	575	745	17.7	14.6
HI-OUTPUT INSERT FIREBOX	560	500	550	16kW estimated	
COMPACT INSERT FIREBOX	560	410	550	13kW estimated	
TRADITIONAL FASCIA	900	195	685		
V.E. & H.T. FASCIA	810	170	650		

*Denotes tested with fan option

kW-(1) is tested to SFH-11:1994 kW-(2) is tested to NZHHA Maximum Output Test method

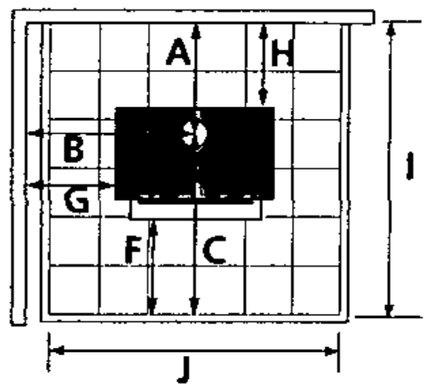

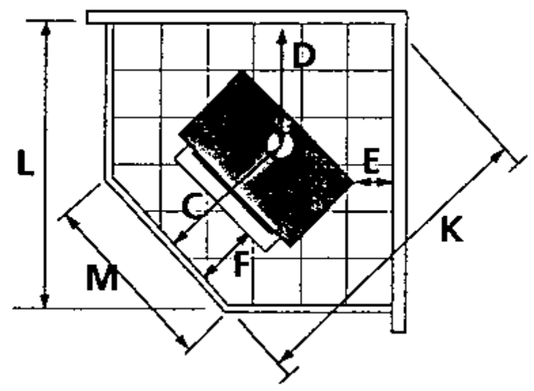

CLEARANCE CHART		A	B	C*	D	E	F*	G	H	I*	J	K*	L	M
TINY-TRAD	With Flueshield	225	445	480*	305	25	100*	200	75	705*	650	920*	660	660
	Without Flueshield	605	545		595	315		350	455	1085*		1320*	940	
PIONEER & PIONEER TRAD	With Flueshield	200	595	480*	400	85	100*	300	50	680*	825	1045*	950	660
	Without Flueshield	580	595		595	280		300	430	1060*		1320*	1145	
PIONEER REAR OUTLET		N/A	565	N/A	N/A	100	100*	270	60	690*	825	1070*	965	660
X-TREME & X-TREME TRAD	With Flueshield	230	575	525*	455	110	100*	240	80	755*	905	1165*	1065	740
	Without Flueshield	800	575		595	250		240	650	1325*		1365*	1205	
ASPIRE & ASPIRE TRAD	With Flueshield	230	575	525*	455	110	100*	240	80	755*	905	1165*	1065	740
	Without Flueshield	800	575		595	250		240	650	1325*		1365*	1205	
WEE-RAD	With Flueshield	200	555	480*	400	80	100*	250	50	680*	825	1045*	950	660
	Without Flueshield	580	555		600	280		250	430	1060*		1320*	1145	
RAD	With Flueshield	230	575	525*	455	80	100*	200	80	755*	905	1165*	1065	740
	Without Flueshield	800	575		625	250		200	650	1325*		1365*	1205	

* To comply with AS2918:1990 add 100mm to hearth projection measurements C, F, I and K.
Note – "With Flueshield" clearances are tested with Pioneers double flueshield.

Pioneer Manufacturing Limited
Mamaku Street, PO Box 11,
Inglewood, New Zealand
Phone 06 756 6520 Fax 06 756 6540
www.woodfire.co.nz
email info@woodfire.co.nz

2002

Document Set ID: 609007
Version: 1, Version Date: 16/10/2002

L804/4805

NEW PLYMOUTH DISTRICT COUNCIL

PRIVATE BAG 2025 NEW PLYMOUTH 4260 Ph. 06 758 8099 Fax 06 758 3757

APPLICATION FOR BUILDING CONSENT AND/OR PROJECT INFORMATION MEMORANDUM (PIM)

APPLICATION TYPE Tick boxes where appropriate

Combined Building Consent & *PIM* [✓] Project Information Memorandum Only [ ] *PIM* No. [ ]

Building Consent Only * Quote previous *PIM* number _____ [ ]

*A *PIM* is required before a building consent can be issued.

FOR OFFICE USE [ ]/[ ] · [ ]

SCALE CODE [DFA1] PROPERTY I. D. [ ]

DETAILS OF PROPERTY TO WHICH THIS BUILDING CONSENT APPLICATION APPLIES

Under the Building Act a Building Consent must be issued to the owner. The owners full name is an essential part of the application.

OWNER'S NAME: MR HOLMES

Surname or company name

First names

ADDRESS OF BUILDING WORK:

FLAT 3 / 3 BULTEEL ST

Street No. Street

NEW PLYMOUTH

Town/District

LEGAL DESCRIPTION OF PROPERTY:

Lot [ ] D.P. 10451

or Section No. [ ] District [ ]

APPLICANT'S DETAILS

Tick this box if the applicant is the owner [ ]

If the applicant *is not* the owner, please give applicant details:

Surname:

First names:

Company name: EARP ALUMINIUM LTD

Status: Builder [✓] Plumber [ ] Designer [✓]

Other (Please specify)

Document Set ID: 611008
Version: 1, Version Date: 08/07/2005

MAIL ADDRESS FOR ALL CORRESPONDENCE RELATING TO THIS APPLICATION

EARP ALUMINIUM LTD

Surname or company name

First names

91 KING ST

Street No. Street/PO/Private Bag

NEW PLYMOUTH

Town

PHONE 06 7588073 STD FAX 06 7584157 STD

DESCRIPTION OF BUILDING WORK

e.g.. garage, deck, dwelling, shop plumbing and drainage, sewerage connection

CONSERVATORY

USE OF COMPLETED BUILDING

If different to description

TYPE OF WORK

Alteration ☐ Addition ☑ Demolition ☐ New building ☐

Relocation ☐ Change of use ☐ Plumbing and drainage only ☐

TOTAL COST OF PROJECT

$ 4,500 Inc. G.S.T.

TOTAL COST OF PLUMBING AND DRAINAGE

$ Inc.. G.S.T.

STAGES

Complete only if this project is one of two or more stages

This is stage No. 1 of 1 stages

INTENDED LIFE OF BUILDING

(Under the Building Act all buildings have a minimum life of 50 years unless specified)

50 years or more ☑

or Less than 50 years ☐

Specify intended life ☐

PROJECT DETAILS

CATEGORY OF WORK

Domestic ☑ Farm ☐

Commercial ☐ Industrial ☐

AREA OF NEW BUILDING WORK

8.7 m²

Document Set ID: 611008
Version: 1, Version Date: 08/07/2005

PERSONS OTHER THAN THE OWNER OR APPLICANT ASSOCIATED WITH THIS APPLICATION

STATUS:

Status may be plumber, builder, engineer, building certifier etc.

Surname

First names

Company name

ADDRESS:

Street No. Street/PO/Private Bag

Town

PHONE: STD FAX STD

STATUS:

Status may be plumber, builder, engineer, building certifier etc.

Surname

First names

Company name

ADDRESS:

Street No. Street/PO/Private Bag

Town

PHONE: STD FAX STD

DECLARATION

This application is made by me as owner of the property.

Signature _____ *Date* _____

or

I am the applicant and have been authorised by the owner to make this applica

Signature _____ *Date* 27/5/14

NEED HELP?

Please refer any queries regarding this application to *Building Inspection Services*, phone (06) 758 8099

Document Set ID: 611008
Version: 1, Version Date: 08/07/2005

COMPLIANCE SCHEDULE DETAILS

SYSTEMS NECESSITATING A COMPLIANCE SCHEDULE

Complete for any buildings that have any of the listed features except residential dwellings, farm buildings and out buildings.

The building will contain the following (tick each applicable box and attach proposed inspection, maintenance, and reporting procedures):

- [ ] Automatic sprinkler systems or other systems of automatic fire protection
- [ ] Automatic doors which form part of any fire wall and which are designed to close shut and remain shut on an alarm of fire.
- [ ] Emergency warning systems for fire or other dangers.
- [ ] Emergency lighting systems.
- [ ] Escape route pressurisation systems.
- [ ] Riser mains for fire service use.
- [ ] Any automatic back-flow preventer connected to a potable water supply.
- [ ] Lifts, escalators, or travelators or other similar systems.
- [ ] Mechanical ventilation or air conditioning system servicing all or a major part of the building.
- [ ] Any other mechanical, electrical, hydraulic, or electronic system whose proper operation is necessary for compliance with the building code.
- [ ] Building maintenance units for providing access to the exterior and interior walls of buildings.
- [ ] Such signs as are required by the building code in respect of the above-mentioned systems.
- [x] None of the above.

OTHER SYSTEMS AND FEATURES TO BE INCLUDED IN THE COMPLIANCE SCHEDULE

Complete only if the building contains one or more of the systems listed above.

(Tick each applicable box and attach proposed inspection, maintenance, and reporting procedures):

- [ ] Means of escape from fire.
- [ ] Safety barriers.
- [ ] Means of access and facilities for use by persons with disabilities which meet the requirements of Section 25 of the Disabled Persons Community Welfare Act 1975.
- [ ] Hand-held hoses for fire fighting.
- [ ] Such signs as are required by the building code or Section 25 of the Disabled Persons Community Welfare Act 1975.

Document Set ID: 611008
Version: 1, Version Date: 08/07/2005

New Plymouth District Council 2/5 3/6 Printed:27May94 Page 1

COVER SHEET

Sent 87

BC Application No: 4805 Date Received: 27/05/94
Related: PIM Application No: 4804 Area: NPD NP DISTRICT

Name: HOLMES, Pete Ronald
Address: 3 Flat 1 BULTEEL STREET
NEW PLYMOUTH

Lot: 1
DP: 10636
Property ID:015554

Assessment: 11700/832.00A

Action No	Action	Estab	Date Returned
1	Receive/Check Information	CLERICAL	
2	Plot Application	RECORDS	
3	Compliance with District Plan	PLANNING	
4	Vehicle Crossings/Footpath Damage	STREET WKS	
5	Compliance with Building Act	BUILDING	
6	Connection/Location	SEWER/WATER	
7	Compliance with BA	PLUMB/DRAIN	
8	Approval	BUILDING	

PAID
RECEIPT NUMBER
DATE PAID
PLANS TAKEN: YES / NO

E=N=D==O=F==R=E=P=O=R=T====E=N=D==O=F==R=E=P=O=R=T=E=N=D==O=F==R=E=P=O=R=T====

	More Info Required	Applicant Phoned	Letter Sent	Amend Received	Application Correct	No. Encls (In Duplicate)
PLANNING					[illegible]	
PLOTTING					[illegible] 30.5.94	2
BUILDING					[illegible] 30.5.94	
P&D					[illegible] 2.6.94	
EHO					/	
SERVICES						
WATER					R.J	
STORMWATER						
SEWER					R.J	
CROSSING					[illegible]	

OFFICER'S SIGNATURE: Approved [illegible] 3.6.94

Not Approved.....

Document Set ID: 611008
Version: 1, Version Date: 08/07/2005

New Plymouth District Council Printed:27May94 Page 1

COVER SHEET

SH 87

BC Application No: 4805 Date Received: 27/05/94
Related: PIM Application No: 4804 Area: NPD NP DISTRICT

Name: HOLMES, Pete Ronald
Address: 3 Flat 1 BULTEEL STREET
NEW PLYMOUTH

Lot: 1
DP: 10636
Property ID:015554

Assessment: 11700/832.00A

Action No	Action	Estab	Date Returned
1	Receive/Check Information	CLERICAL	
2	Plot Application	RECORDS	30·5·94 (2)
3	Compliance with District Plan	PLANNING	
4	Vehicle Crossings/Footpath Damage	STREET WKS	
5	Compliance with Building Act	BUILDING	
6	Connection/Location	SEWER/WATER	
7	Compliance with BA	PLUMB/DRAIN	
8	Approval	BUILDING	

E=N=D==O=F==R=E=P=O=R=T====E=N=D==O=F==R=E=P=O=R=T=E=N=D==O=F==R=E=P=O=R=T====

NP

NOT APPROVED PLANNING*

/ / *
Sign/Date

Reason(s)

☐ Bulk/Location ☐ Parking/Load
☐ Resource Consent ☐ Landscaping
☐ Trees/Historic ☐ Hazard

Other: .....

* Warning Required if B.C. Issued

APPROVED PLANNING

31 / 5 / 94
Sign/Date

B.C. Conditions Required

☐ S.36 B.A. ☐ S.37 B.A.
☐ Landscaping ☐ R.C. Cond.
☐ Trees/Historic ☐ .....

Other: .....

ACTIONS	DATE/INIT
R	

Document Set ID: 611008
Version: 1, Version Date: 08/07/2005

New Plymouth District Council Printed:27May94 Page 1

COVER SHEET

SSh6 87.

BC Application No: 4805 Date Received: 27/05/94
Related: PIM Application No: 4804 Area: NPD NP DISTRICT

Name: HOLMES, Pete Ronald
Address: 3 Flat 1 BULTEEL STREET
NEW PLYMOUTH

Lot: 1
DP: 10636
Property ID:015554

Assessment: 11700/832.00A

Action No	Action	Estab	Date Returned
1	Receive/Check Information	CLERICAL	
2	Plot Application	RECORDS	
3	Compliance with District Plan	PLANNING	
4	Vehicle Crossings/Footpath Damage	STREET WKS	
5	Compliance with Building Act	BUILDING	
6	Connection/Location	SEWER/WATER	
7	Compliance with BA	PLUMB/DRAIN	
8	Approval	BUILDING	

E=N=D==O=F==R=E=P=O=R=T====E=N=D==O=F==R=E=P=O=R=T=E=N=D==O=F==R=E=P=O=R=T====

	More Info Required	Applicant Phoned	Letter Sent	Amend Received	Application Correct	No. Encls (In Duplicate)
PLANNING						
PLOTTING					20 5 94	2.
BUILDING						
P&D						
EHO						
SERVICES						
WATER						
STORMWATER						
SEWER						
CROSSING						

OFFICER'S SIGNATURE: Approved.....

Not Approved.....

Document Set ID: 611008
Version: 1, Version Date: 08/07/2005

PROJECT INFORMATION MEMORANDA

(Please mark appropriate box. If there is knowledge relating write comment below.)

LAND

- ☐ EROSION
- ☐ AVULSION
- ☐ FALLING DEBRIS
- ☐ SUBSIDENCE
- ☐ SLIPPAGE
- ☐ ALLUVION
- ☐ INUNDATION
- ☐ HAZARDOUS CONTAMINANTS
- ☐ FILL

UTILITIES

- ☐ WATER
- ☐ SEWER
- ☐ STORMWATER
- ☐ INTERNAL DRAINS
- ☐ GAS
- ☐ ELECTRICITY
- ☐ VEHICULAR ACCESS
- ☐ UTILITIES PROTECTION
- ☐

OTHER CONSENTS/AUTHORISATIONS:

SECTION	INFORMATION FROM:	INITIAL & DATE

Vehicle Entrance

Width of vehicle crossing required .....MR..... LD/HD

Crossing Fee $..... Instruction No: .....

Document Set ID: 611008
Version: 1, Version Date: 08/07/2005

Project Information Memorandum No:4804
Section 31, Building Act 1991

Issued:14Jun94

CONTACT : EARP ALUMINIUM LTD
C/- EARP ALUMINIUM LTD
91 KING STREET
NEW PLYMOUTH

OWNER : MR PR HOLMES
C/- EARP ALUMINIUM LTD
91 KING STREET
NEW PLYMOUTH

Application received: 01Jun94

PROJECT LOCATION

Street Address: 3 Flat 1 BULTEEL STREET, NEW PLYMOUTH
Property ID: 015554
Assessment No: 11700/832.00A
Legal: FLAT 3 GRGE 3 DP 10636 HAVING 1/3 INT IN 617 SQ METRES BEING LOT

PROJECT

The project is for Additions
Intended Use(s): Residential
Intended life: Indefinite but not less than 50 years
Value of Work: $4,500.00

COUNCIL CHARGES

The Council's total charges payable on the uplifting of this project memorandum in accordance with the attached details, are: $0.00

Document Set ID: 611008
Version: 1, Version Date: 08/07/2005

1: WHAT IS A PIM?

Section 31 to the Building Act 1991 requires that the Council provides a PIM prior to (or as part of) the issue of a Building Consent.
This PIM or "Project Information Memorandum" is a statement by the Council of the known information about the property to the extent it is relevent to the intended "project".
It will usually include other information stating or giving guidance as to the extent of compliance with the Building Act and the District Plan. However these comments will be limited to the extent and accuracy of the information provided. A Certificate of Compliance under the Resource Management Act 1991 should be sought where confirmation that the proposed complies is required.

2: CAN BUILDING WORK PROCEED?

YES- This PIM consent confirms that the proposed building work may be undertaken subject to the conditions of the accompanying Building Consent and any relevent provisions of the Building Act 1991.

3: Authorisations and Requirements that will need to be met in respect of the proposed work and District Plan compliance:

No other authorisations or requirements identified as part of this PIM.
If this is a PIM only application there are no identified areas of non-compliance with the District Plan. In the case of a combined PIM/Building Consent application such matters will be dealt with as part of the Building Consent.

4: Consent Applications lodged with the Council applying to the project or the site:

No current Resource Consents relevant to project.

5: Authorisations Refused for the proposed project:

No known refused authorisations.

6: Classified Land,Buildings, features, utilities or works that could be affected by the proposed work:

No information relevent to this project regarding classified land or buildings, known to this Council.

7: Fill:

No known fill.

8: Slippage:

No information, requirements or comments relevent to this project.

9: Erosion:

Document Set ID: 611008
Version: 1, Version Date: 08/07/2005

No information relevent to this project regarding erosion, known to or held by this Council.

10: Flooding:

No information requirements or comments relevent to this project.

11: Faultlines:

No known faultlines.

12: Other Hazards:

No other known hazards.

13: Reserve Contribution on Development (refer Section 294 to the Local Government Act 1974):

Reserve Contribution on Development is not applicable to this project.

14: Sewer Services and Sewage Disposal:

No requirements or comments relevant to this project.

15: Stormwater Service and Disposal Requirements:

No requirements or comments relevant to this project.

16: Sewer and Water Disc ctions:

Sewer or water disconnection not applicable to this PIM.

17: Water Services:

Please note that where the Council is installing a water connection the responsibility of the Council is from the main up to and including the connection box (toby) only.

No requirements or comments relevant to this project.

18: Rural Fire Fighting:

In Rural situations water tanks can provide a source of water for fire fighting purposes. If water tanks are being installed as part of this project please take care to locate the tanks in a location where they will be accessible if a fire emergency occurs.

19: Councils Drainage and Services Records:

A copy of the Councils Service Records relating to the property will be enclosed as part of this PIM if relevent to the project.
This information will include where available and relevent to the project:

* A copy of the drainage record card showing drains within the property.
* A plan of water reticulation in the vicinity of the property.

Document Set ID: 611008
Version: 1, Version Date: 08/07/2005

* A plan of sewer reticulation in the vicinity of the property.
* A plan of stormwater reticulation in the vicinity of the property.

The Councils records are in some cases incomplete and relevent information may in some cases be missing.
If you have any queries regarding such matters please contact the Councils Public Health Divisions Customer Services Officer in regard to connection to services and services outside the property boundary or the Councils Plumbing & Drainage Inspectors in relation to drains within the property.

20: Vehicle Crossing Requirements:

No requirements or comments relevant to this project.

21: Installation of vehicle crossings by contractors:
Applies only to Contractors carrying out large scale Commercial or Industrial projects.

No requirements or comments relevant to this project.

22: Rural Access Requirements:

No requirements or comments relevant to this project.

23: Limited Access State Highways:
These are generally administered by Transit New Zealand and not the Council. Restricted access provisions apply.

No requirements or comments relevant to this project.

24: Footpath Damage Deposits:

No requirements or comments relevant to project.

25: Compliance with Building Code:
This section of the PIM identifies areas of non compliance with the Building Code (if any) apparant from the information provided. It is not intended to be a full check for compliance.

No requirements or comments relevant to this project.

26: Complaints received by the Council regarding the construction of any existing buildings related to the project:

No complaints recorded relevant to this project.

27: Engineering Design Required:

No requirements or comments relevant to this project.

28: Site Reports Required:

No requirements or comments relevant to this project.

29: Reports on the Existing Building Required:

Document Set ID: 611008
Version: 1, Version Date: 08/07/2005

No requirements or comments relevant to this project.

30: Compliance Schedule Matters: (Refer Section 44 of the Building Act 1991)

No requirements or comments relevant to this project.

31: Endorsement of Certificate of Title:
Section 36 to the Building Act 1991 provides for the endorsement of Certificates of title where the site of the project is subject to a known hazard but the project is still allowed to proceed where the degree of risk is acceptable and the Council is indemnified against loss.

No requirements or comments relevant to this project.

32: Multi Title Developments:
Section 37 of the Building Act 1991 provides that where a project is located on 2 or more sites under the same ownership, the Council may approve the development subject to a certificate being prepared and lodged with the District Land Registrar requiring that the sites shall not be transferred or leased seperatly.

No requirements or comments relevant to this project.

33: Sign Off

Approving Officer.....

Date.../.../....

Document Set ID: 611008
Version: 1, Version Date: 08/07/2005

Building Consent No:4805
Section 35, Building Act 1991

Issued:14Jun94

CONTACT : EARP ALUMINIUM LTD
C/- EARP ALUMINIUM LTD
91 KING STREET
NEW PLYMOUTH

OWNER : MR PR HOLMES
C/- EARP ALUMINIUM LTD
91 KING STREET
NEW PLYMOUTH

Application received: 01Jun94

PROJECT LOCATION

Street Address: 3 Flat 1 BULTEEL STREET, NEW PLYMOUTH
Property ID: 015554
Assessment No: 11700/832.00A
Legal: FLAT 3 GRGE 3 DP 10636 HAVING 1/3 INT IN 617 SQ METRES BEING LOT

PROJECT

The project is for Additions
Intended Use(s): Residential
Intended life: Indefinite but not less than 50 years
Value of Work: $4,500.00

COUNCIL CHARGES

The Council's total charges payable on the uplifting of this building consent in accordance with the attached details, are: $0.00

Receipt number:	59423	Date:	01Jun94	Amount:	$54.00
Receipt number:	59684	Date:	14Jun94	Amount:	$18.00

Document Set ID: 611008
Version: 1, Version Date: 08/07/2005

1: CONDITIONS APPLYING TO THIS BUILDING CONSENT:

There are no special conditions applying to the issue of this Building Consent.

2: Issue Phrase Options

This Building Consent is issued under the Building Act 1991. The project may be undertaken in accordance with the approved plans, specifications and any conditions specified.
Duties and responsibilities under any other Act are unaffected by this consent.

Approving Officer .....

Date .../.../...

Document Set ID: 611008
Version: 1, Version Date: 08/07/2005

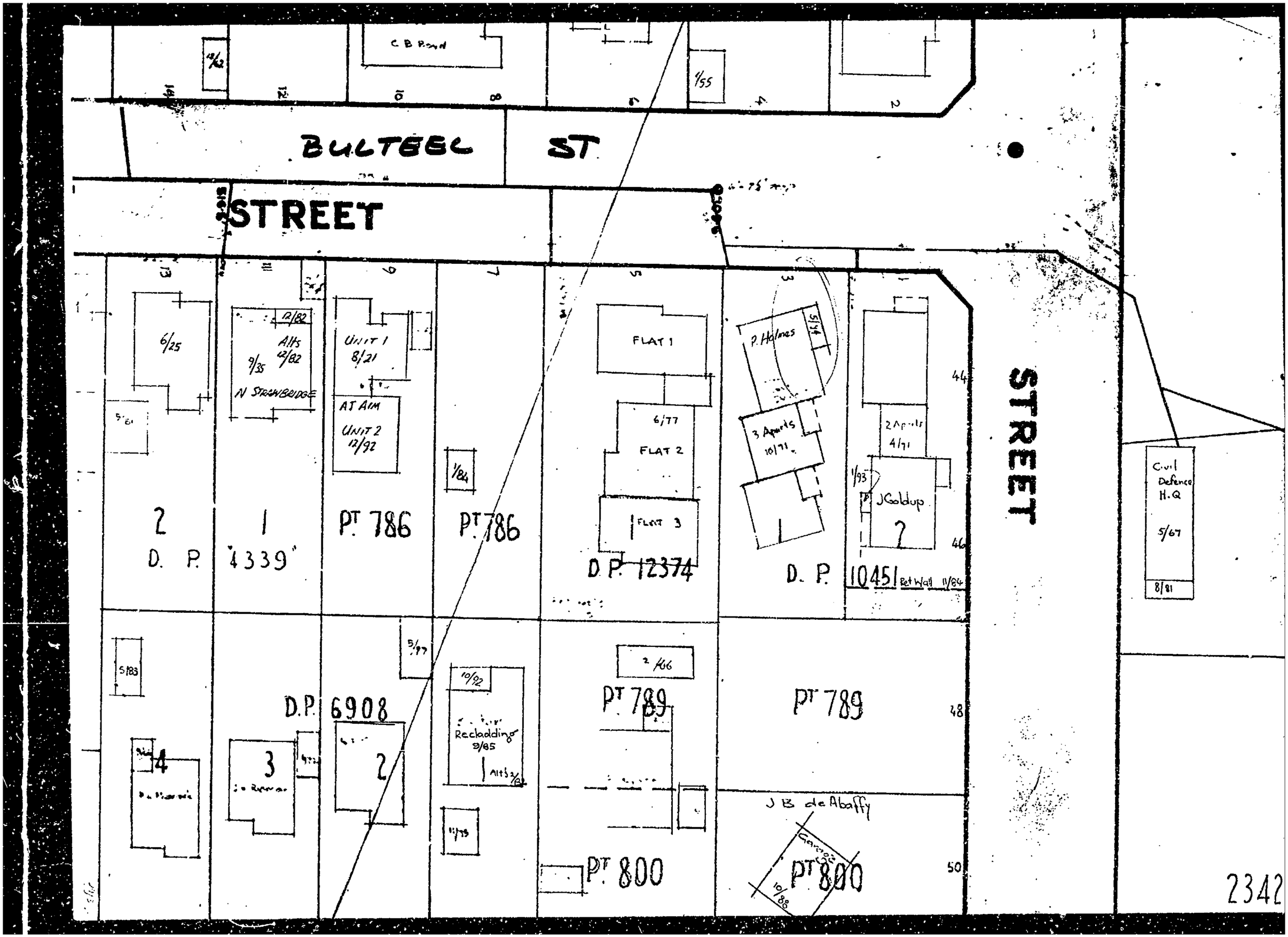

Document Set ID: 611008
Version: 1, Version Date: 08/07/2005

Plan Number No. 10451
Title Reference C2/566

Land and Deeds Plan
Firm Sexton, Christie & McKolay
Date 28.7.72 Fee $10.00
Time 11.0 a.m. Abstract No.
Plan Required

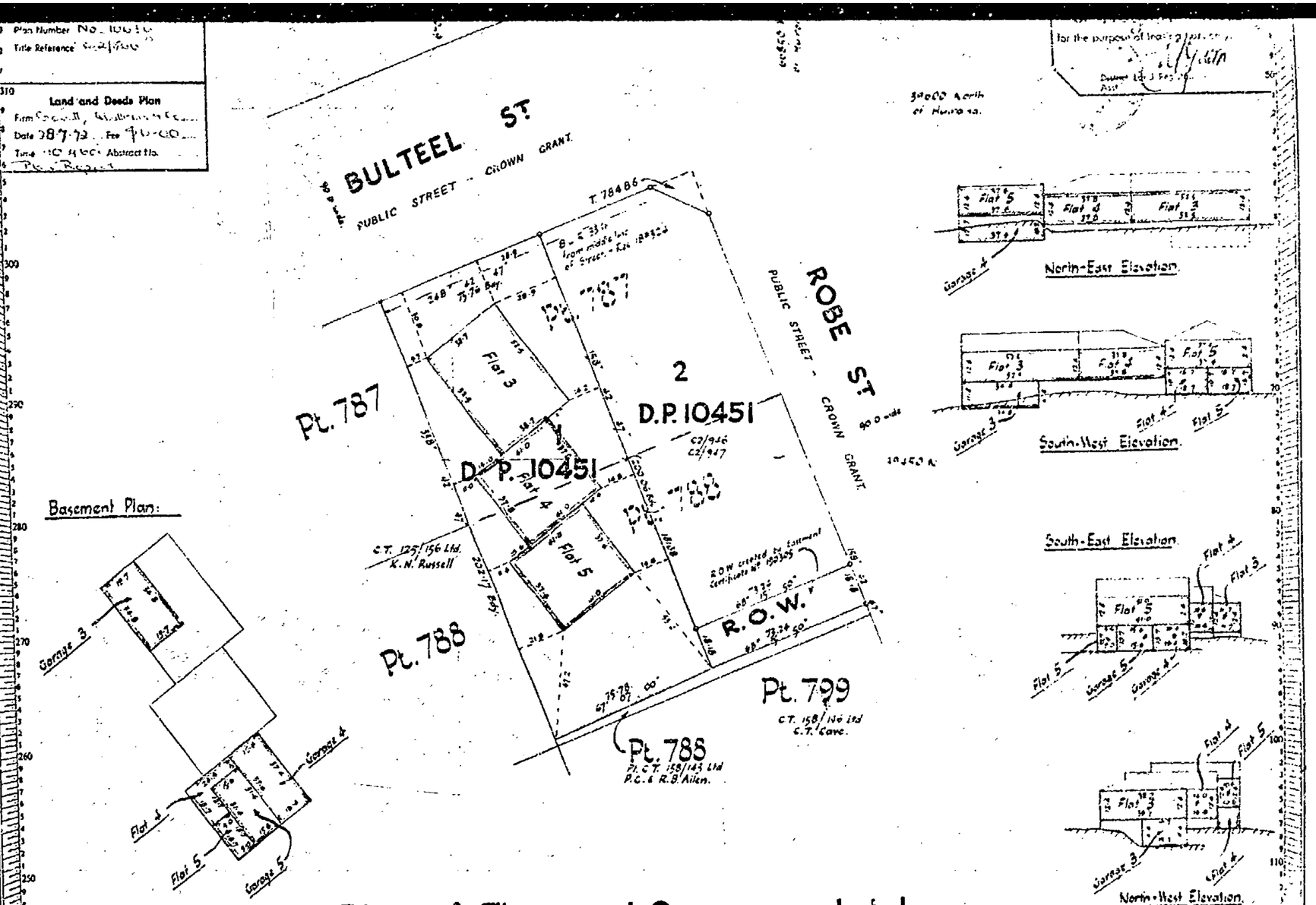

Plan of Flats and Garages on Lot 1, D.P. 10451, being Pt. Secs. 787 & 788, Town of New Plymouth.

Total Area: 0 0 24·4

For Surveyor's Inspection
File 5/112 August 1972.

Approved for the purpose of leasing flats only.
Land Transfer surveyor
17/8/72
Received 28.7.72
Reference plans D.P. 10451
Field book 1338 p 36
Examined by
Recorded

Comprised in CT C2/566 (All).
Survey Block & District Y Paritutu
Land District Taranaki **Local Body** New Plymouth City Council
Scale 30 links to an inch **Surveyed by** Sexton, Christie & McKolay **Date** June 1972

I, Colin Peter Forbes Mavinlay Registered Surveyor, hereby certify that the positions of the buildings shown hereon are correct in relation to the Certificate of Title boundaries and that the position of each flat and garage is correct in relation to the building of which it forms part.

Approved

Applicant or Registered Owner

Document Set ID: 611008
Version: 1, Version Date: 08/07/2005

4804/6905

RYLOCK NEW PLYMOUTH

30 MAY 1994

ALUMINIUM JOINERY ◆ GARAGE DOORS ◆ DOOR OPENERS

Proposed Conservatory : MR & MRS HOLMES
FLAT 3 / 3 BULTEEL ST
NEW PLYMOUTH.

Please Note : The area we propose to place conservatory already has timber & glass screens!

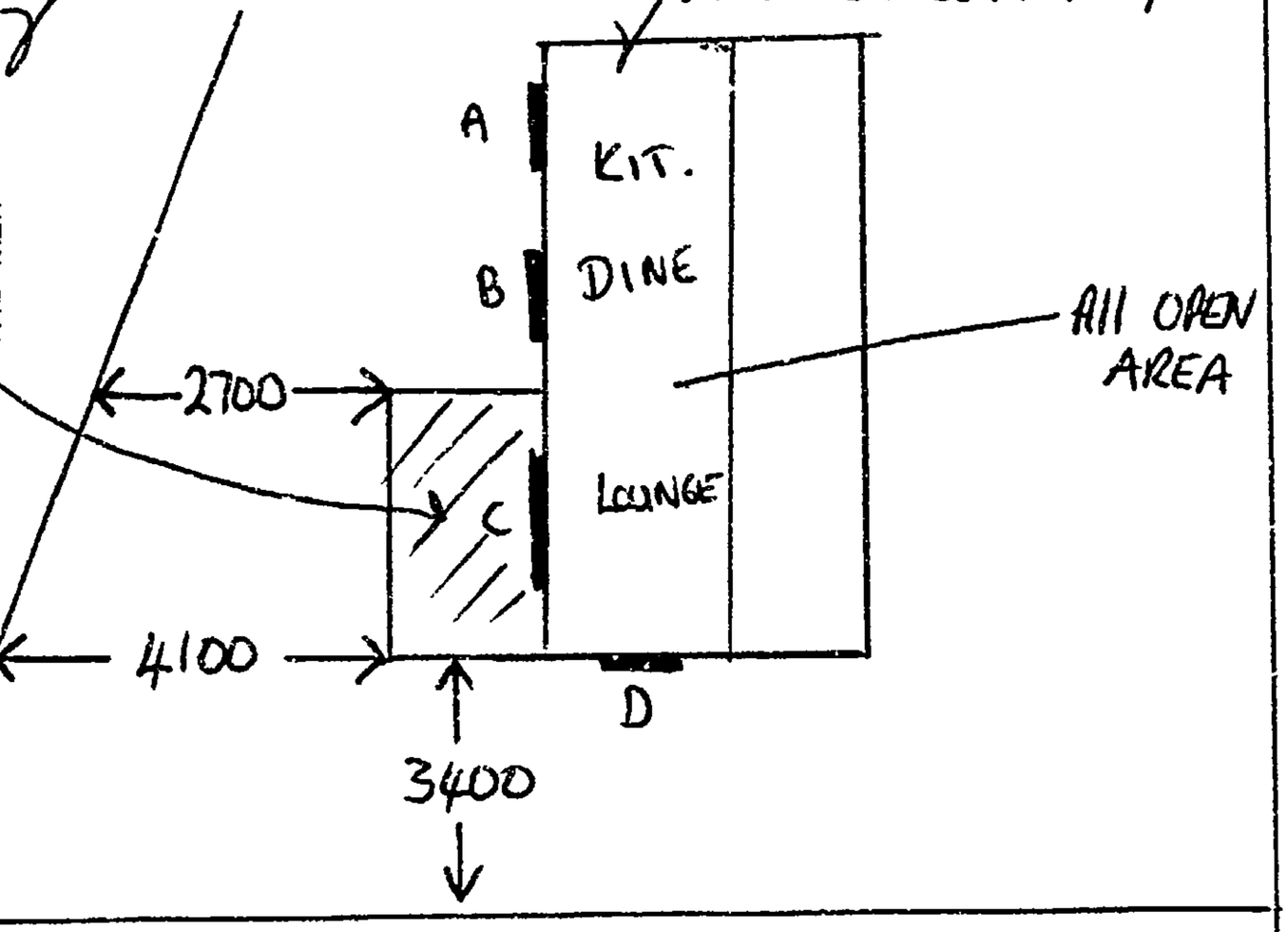

NEW PLYMOUTH DISTRICT COUNCIL
PLANS AND SPECIFICATIONS APPROVED FOR TYPE, USE, SITING, COVERAGE AND CONSTRUCTION, AS IN ACCORDANCE WITH ALL RELEVANT ACTS REGULATIONS AND BY-LAWS ADMINISTERED BY THE NEW PLYMOUTH DISTRICT COUNCIL.

		DATE
PLANNING		
PUBLIC HEALTH		
BUILDING		2.6.94

THESE PLANS AND SPECIFICATIONS ARE THE PROPERTY OF THE NEW PLYMOUTH DISTRICT COUNCIL AND MUST BE KEPT ON SITE.

* Conservatory to be erected onto existing concrete base 600 mm above groundline.

* Stormwater to existing drainage.

* Overall Height of overall conservatory from groundline = 2865.

EARP ALUMINIUM LIMITED ◆ 91 KING STREET NEW PLYMOUTH ◆ PHONE 0-6-758 8073, FAX 0-6-758 4157

Document Set ID: 611008
Version: 1, Version Date: 08/07/2005

NAME MRS HOLMES

ADDRESS FLAT 3 / 3 BULTEEL ST
NEW PLYMOUTH.

PHONE

DATE ORDERED
DATE REQUIRED
DATE DELIVERED

TAX INVOICE

G.S.T. Registration No. 15-771-992

CONTRACT

PHONE

Location		Code	Description & Drawing	Tran/Mull	Sash	Glass	Reveals
			600 — 100 mm Fall in Roof				
			300				
			2265 2160				
			670 F F				
			1700				
			500 2265 2160 F F 2865 to groundline				
			4 x PATIO BOLTS Plus Extra holes at 100 mm. 1700				
			1400 1400 2160 2760 to ground 670				
			5130 5030 GROUNDLINE				
			THERMOROOF				
			ordered 4 @ 1400 plus stock.				
Quickset							
Pack Fascia			NOTE: WOULD COST. $ 490-00 EXTRA				
2x1			FOR SOLAR TINT ✓✓				
+ 3m Sauntan Cord							
+ 50 Stud x HEX			Cut R/S into Concrete !!				
200 mm Overhang			3 Sides				

SILVER ☐ WHITE ☐ BRONZE ✓✓ VARIATIONS

REVEALS PLAIN ☐ REVEALS GROOVED ☐ T.W.T. ☐ ACTUAL ☐

OBSCURE GLASS SOLAR BRONZE ✓✓ SOLAR GREY ☐

COL' OBSCURE GLASS ✓

INSTALL ✓

DELIVER ☐

CUSTOMER TO COLLECT ☐

ADVISE CUSTOMER ☐

Document Set ID: 611008
Version: 1, Version Date: 08/07/2005

STREET

STREET

STREET

10/59 C.J. Boyd

12/62

Brown Lands Devmt

2 Apts 8/71

J. Goldup 2

D.P. 10451

Ret Wall 11/64

Brown Lands Devmt

3 Apts 10/71

FLAT 1

M. McLeod 6/77

FLAT 2

See D.P. 12589 D.P. 12714

FLAT 3

D.P. 12374

Ret. Walls 5/78

Defence H.Q. 5/67

28 x 1'0" C.

Consolidation proposed

1/64

12/82 Alts 12/82

9/35 N. Strangeridge

UNIT 1 8/21.

UNIT 2 12/92 N.J. Aim.

1/84

PT 786

D.P. 4339

PT 789

PT 789

2/66

14/77

PT 789

S.R. Wyatt

11/71

PT 800

J.B. de Abaffy

PT 800 10/88

10/72

B.L. Road Reclading 9/

Alts 9/84

11/76

D.P. 6908

N.F. Collins 2

3 J.W. Riordan

4/74

S/B3

9/74 R.L. Morgan

D.P. 10098

5/61

10/65

7/73

5/61

139.45

6/80

Document Set ID: 611008
Version: 1, Version Date: 08/07/2005

...s On Use

...ments, or alterations ... Rudnev (NZ) Limited should be ... for specialist advice on alternative ... specifications which will offer enhanced ... performance.

...achieve maximum performance from Rudnev ... Construction Systems, all filing, cutting and sealing ... be in accordance with the construction ... specified by Rudnev (NZ) Limited.

...aterials and Manufacture

...nel Skins

...anised steel coil manufactured to NZS ... 1978, base thickness 0.53mm with hot dipped ... coating to ZM 300 class. Coil continuously ... roll to core with mild rib indents formed in ... face and panel edges roll-formed to standard ... dimensions.

...esive

...thosetting 2-part polyurethane, bonding ... under pressure.

...

...m-250mm thick, self-extinguishing 'S' ... moulded polystyrene sheet manufactured to ... 13', kiln-dried and stress relieved. ... panel edges to accept jointing system.

...and Adoption applied for.

...l System — SMP Panels

...h coat of heat-cured silicone modified ... paint to a dry film thickness of 20 ± 4 ... metres. Finish coats are applied over a ... corrosion inhibitive primer after an alkaline cleaned ... acid sealed zinc phosphate pre-treatment.

...anical Properties

...chanical strength of a Rudnev Panel is ... by laminated bonding of the separate ... elements into a single strong structural unit. The ... strength outer skins carry most of the tension ... compression loads, while the polystyrene core ... both to stabilise the outer skins against ... and resist shear stresses. Strength is a ... of panel thickness as the following table ...

... NZS 4203:1984, with 33% stress increase allowed under wind load.

(2) Ceiling spans calculated on panel dead load plus 0.25 Kpa live load.

(3) These spans are based on typical project designs incorporating a number of variable design factors. Full engineering calculations should be carried out for specific projects. Design services available from Rudnev (NZ) Ltd.

THE MECHANICAL PROPERTIES SHOWN ARE BASED ON TESTS OF PANEL MANUFACTURED BY RUDNEV (NZ) LTD AND ARE NOT NECESSARILY APPLICABLE TO ANY OTHER PANELS.

Vapour Barrier

Panel Skins are impermeable to moisture and edge sealing is achieved with neutral curing silicone or butyl mastic sealants and aluminium extrusions.

Insulation Properties

Rudnev Panels have the following 'R' values:

Panel Thickness (millimetres)	Mean Face Temp (°C)	'R' Value* (m² °C/W)
50 mm	25°	1.59
100 mm	25°	2.93
150 mm	10°	4.54
250 mm	10°	7.46

*As determined by NZS 4214:1977, total 'R' value for ceiling panels.

Thermal Bridging

No thermal bridges are created with standard Rudnev Construction Systems. Full thermal insulation thickness can be maintained throughout the panel structure.

Unlike other thermal insulation materials, the long-term performance of EPS does not alter. EPS is dimensionally stable and will not settle, there is no capillary action and moisture absorption is minimal.

Maximum continuous service temperature is 80°C. Rudnev EPS will stand short term temperatures in excess of this rating dependent on structural loadings. Please consult Rudnev (NZ) Limited for further advice on such applications.

Document Set ID: 611008
Version: 1, Version Date: 08/07/2005

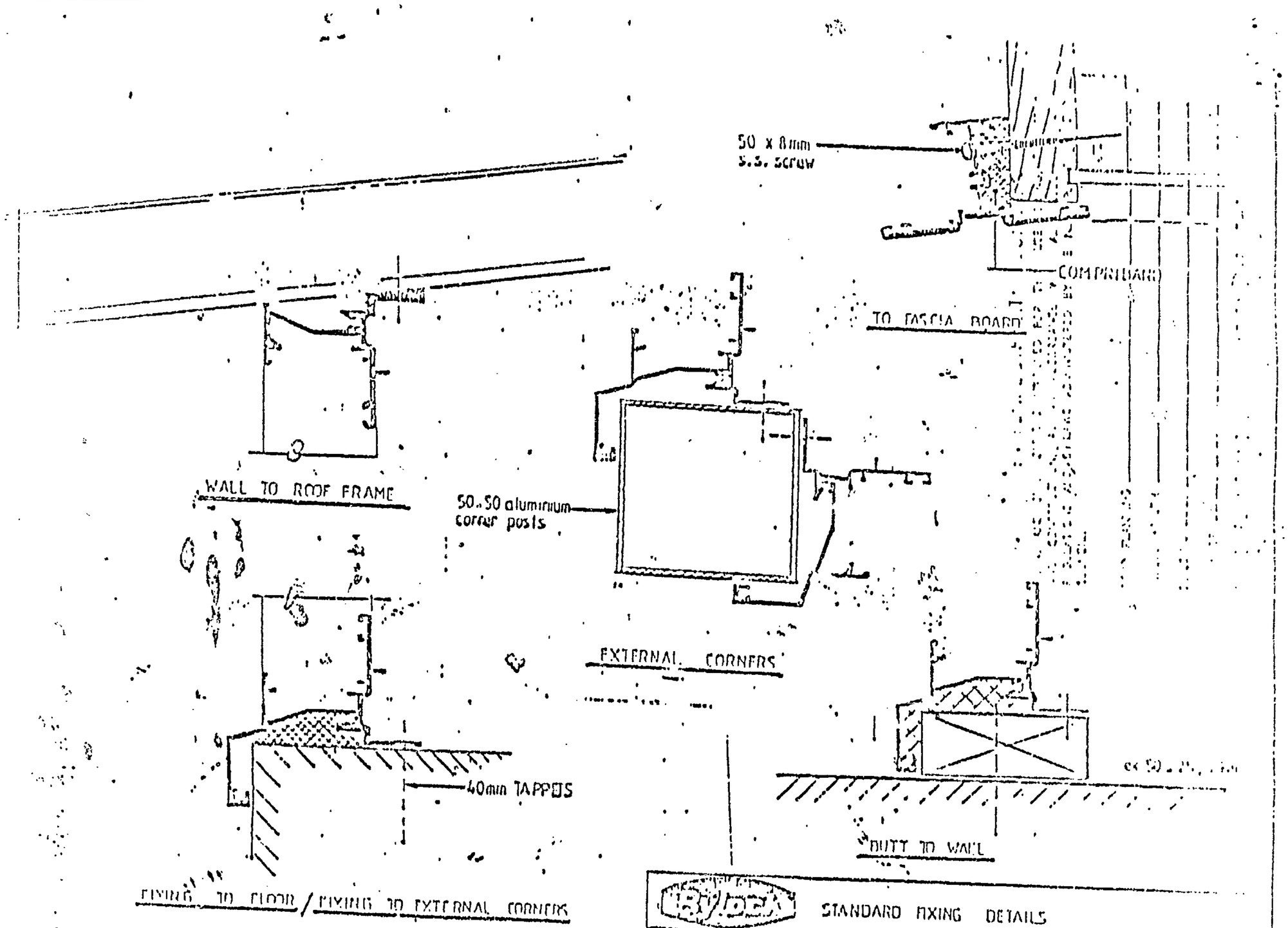

STANDARD FIXING DETAILS

EARP ALUMINIUM
91 KING STREET NP 00.073

SCALE 1:1

DATE MAR '85

DRAWN

APPROVED

Document Set ID: 611008
Version: 1, Version Date: 08/07/2005

BUILDING CONSENT

67732A

PROPERTY ID ~~015555~~
015553

67732A

NEW PLYMOUTH DISTRICT COUNCIL
newplymouthnz.com

Code Compliance Certificate: 22088
Section 436, Building Act 2004

Issued:04Apr06

The Building

Street Address of building: 3 BULTEEL STREET, NEW PLYMOUTH 4601
Legal Description of land where building is located:
LOT 1 DP 10451
Current, lawfully established use: Conservatory Addition
Year first constructed: 2005

The Owner

Name of owner: MS Mary Elizabeth ZALBA
Contact Person: RYLOCK NEW PLYMOUTH
Mailing Address: C/-RYLOCK NEW PLYMOUTH
91 KING STREET
NEW PLYMOUTH 4601

Street address/registered office: 3 BULTEEL STREET
NEW PLYMOUTH 4601

Phone number: (Bus.)
(Pvt.)

Facsimile number:
Email address:
Website:

First point of contact for communications with council/building consent authority:

New Plymouth District Council
Private Bag 2025
NEW PLYMOUTH
Ph: 06 7596060
Fax: 06 7596072
Email: enquiries@npdc.govt.nz

Building Work

Building Consent number: 67732
Issued by:New Plymouth District Council

Building Consent number: 67732

Code Compliance

The building consent authority named below is satisfied, on reasonable grounds, that -

(a) the building work complies with the building consent.

Council Charges

The Council's total charges payable on the uplifting of this code compliance certificate in accordance with the attached details are: $0.00

This is a final code compliance certificate issued in respect of all of the building work under the above building consent

1: CODE COMPLIANCE CERTIFICATE

Signature

Co-ordinator Building Inspections

Position

On behalf of: New Plymouth District Council

Date: 04 Apr 2006

Building Consent No:67732
Section 35, Building Act 1991

Issued:15Feb05

CONTACT : RYLOCK NEW PLYMOUTH
C/- RYLOCK NEW PLYMOUTH
91 KING STREET
NEW PLYMOUTH

OWNER : MS Mary Elizabeth ZALBA
C/-RYLOCK NEW PLYMOUTH
91 KING STREET
NEW PLYMOUTH 4601

Application received: 17Jan05

PROJECT LOCATION

Street Address: 3 BULTEEL STREET, NEW PLYMOUTH 4601
Property ID: 047263
Assessment No:
Legal: LOT 1 DP 10451

PROJECT

The project is for Additions
Intended Use(s): recreational area
Intended life: Indefinite but not less than 50 years
Value of Work: $4,000.00

COUNCIL CHARGES

The Council's total charges payable on the uplifting of this building consent in accordance with the attached details, are: $0.00

Receipt number: 2506802 Date: 24Jan05 Amount: $155.00

1: CONDITIONS APPLYING TO THIS BUILDING CONSENT:

There are no special conditions applying to the issue of this Building Consent.

2: Additional comments regarding this Building Consent:

No additional comments.

3: CONDITIONS OF ISSUE:

This Building Consent is issued under the Building Act 1991. The project may be undertaken in accordance with the approved plans, specifications and any conditions specified. Duties and responsibilities under this or any other Act are unaffected by this consent.

This consent does not imply approval as to the use of the building in terms of the District Plan although every effort has been made to bring to your attention any obvious problems in this respect. Confirmation of the compliance of the activities within the site or buildings can be sought by making an application to the Council for a Certicate of Compliance under the provisions of Section 139 to the Resource Management Act 1991.

4: LAPSE & CANCELLATION OF CONSENTS

Your attention is drawn to the provisions of Section 41 of the Building Act 1991 which sets limits on the time that a Building Consent remains valid if work is not progressing.

The Section reads:

(1) A Building Consent shall lapse and be of no effect if-

(i) The building work concerned has not been commenced within 6 calender months after the date of issue of the consent or within such further period as the Territorial Authority in its absolute discretion may allow; or

(ii) Reasonable progress on the building work has not been made within 12 calender months after work has commenced or within such further period as the Territorial Authority at its absolute discretion allow.

Authorised Officer .....

Date: ...15../..2../..05...

35mm

BUILDING FILE

Code No. 75/3

Subject FLATS

No. Sheets 2

Permit No R2296

Date 18.10.71

MICROBOX

Document Set ID: 419991
Version: 1, Version Date: 28/04/2005

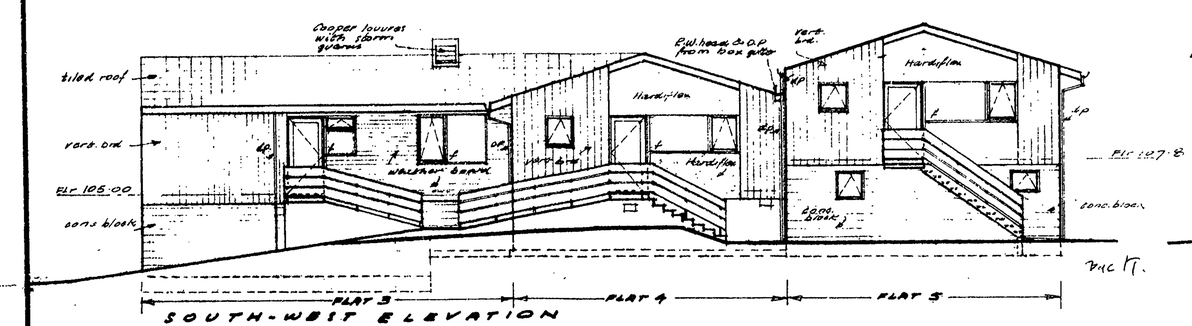

SOUTH-WEST ELEVATION

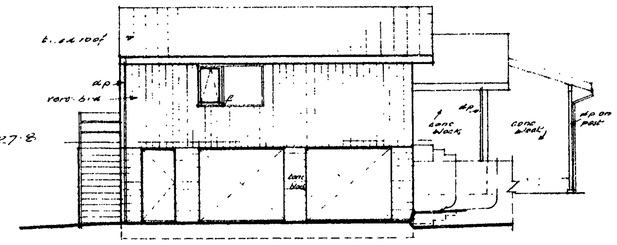

SOUTH-EAST ELEVATION

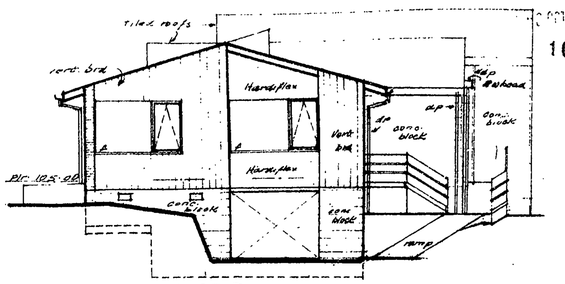

NORTH WEST ELEVATION

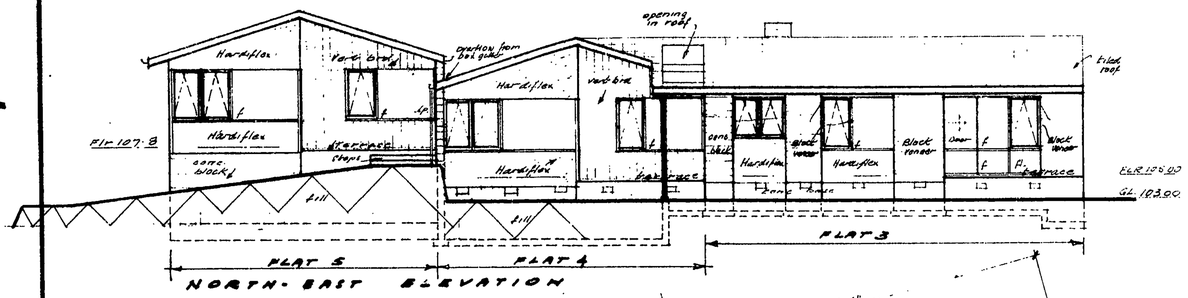

NORTH-EAST ELEVATION

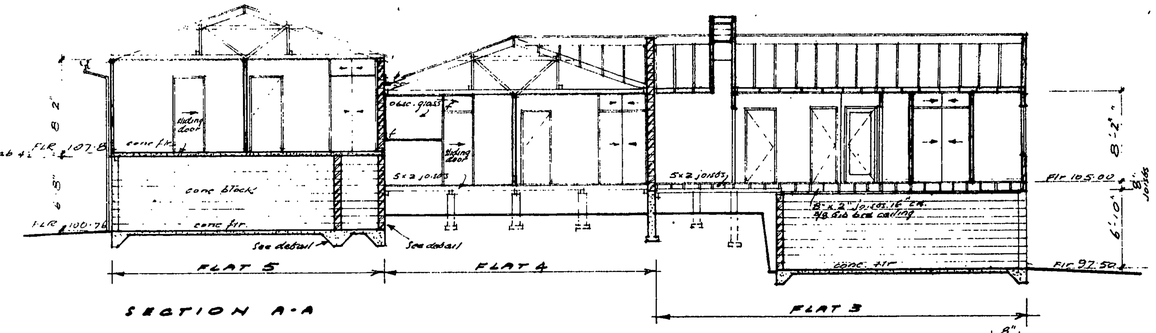

SECTION A-A

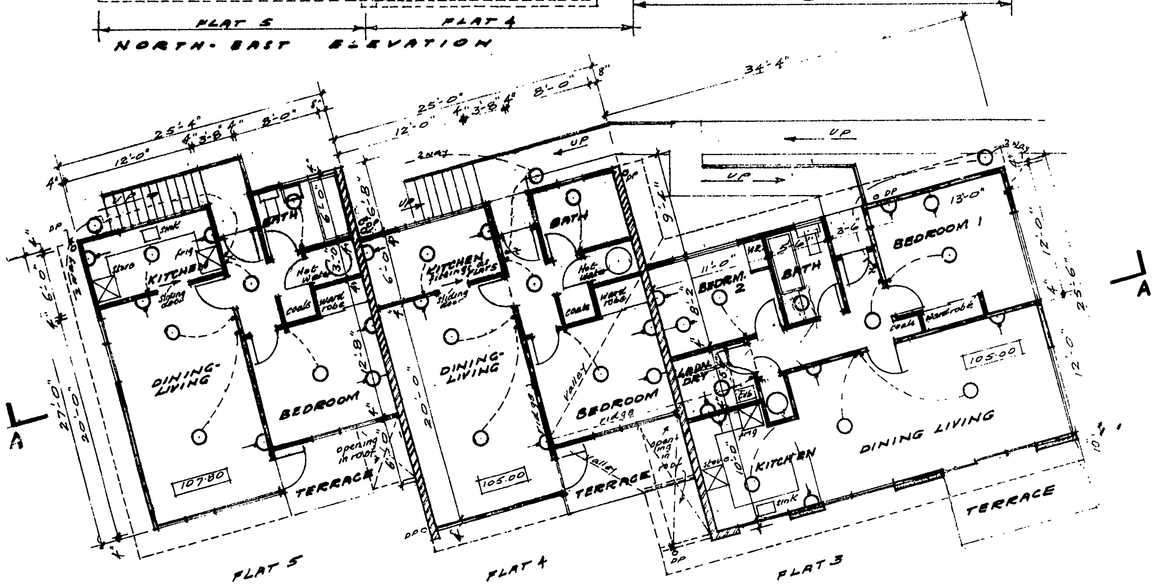

FLOOR PLAN

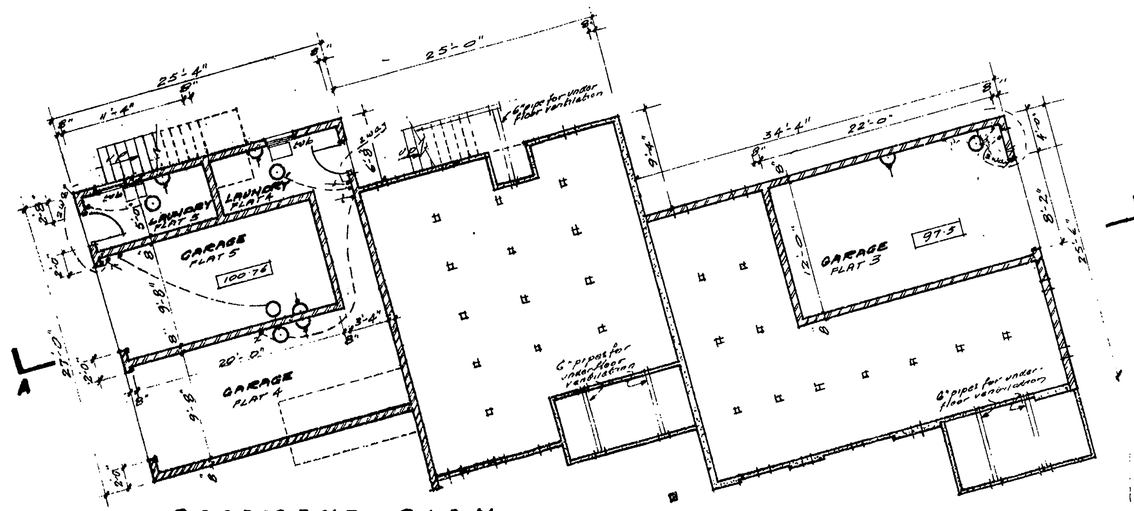

BASEMENT PLAN

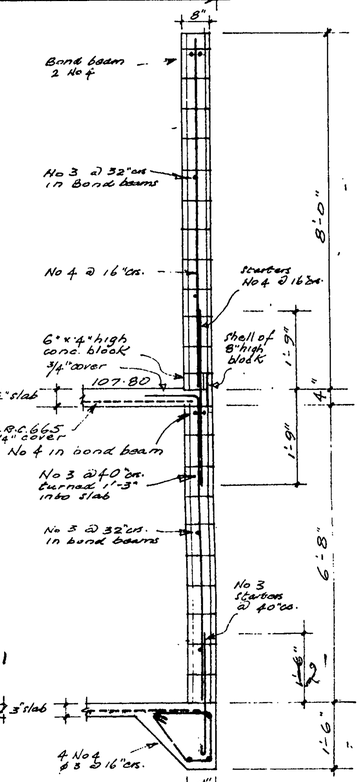

TYPICAL DETAIL FOOTING INSIDE WALLS BASEMENT FLAT 3

DETAIL CONC. BLOCK WALL BETWEEN FLATS 4 & 5

NOTE: See Sheet 3 for block types

75-3

LEVELS - Datum 100.00 is top of fire hydrant cover in grass on east side of Robe St. near its intersection with Bultcel St.

Date	REVISION	By	Approved
5.5.7.	Details Block walls Flat 5	C.A.W.	R.J.B.

1/8" SCALE PLANS, ELEVATIONS & SECTIONS FLATS 3, 4 & 5
DETAILS SCALE 1/2" to 1'-0"

PROPOSED FLATS FOR
HENRY BROWN & COMPANY, LIMITED
CNR. ROBE & BULTEEL STREETS, NEW PLYMOUTH

BOWERING THOMSON BOON & ASSOCIATES
ARCHITECTS
CONSULTING ENGINEERS
TOWN PLANNERS
NATIONAL INSURANCE BUILDING
P.O. Box 195 Telephone 83947
Brougham Street New Plymouth

DRAWN BY C.A.W.	DATE DRAWN 3/3/71
TRACED C.A.W.	PRINTED 10 AUG 1971
CHECKED	JOB 502
ENGINEER R.J.B.	DRAWING NUMBER 4
APPROVED R.J.B.	SET OF 4

MICROBOX

10 25

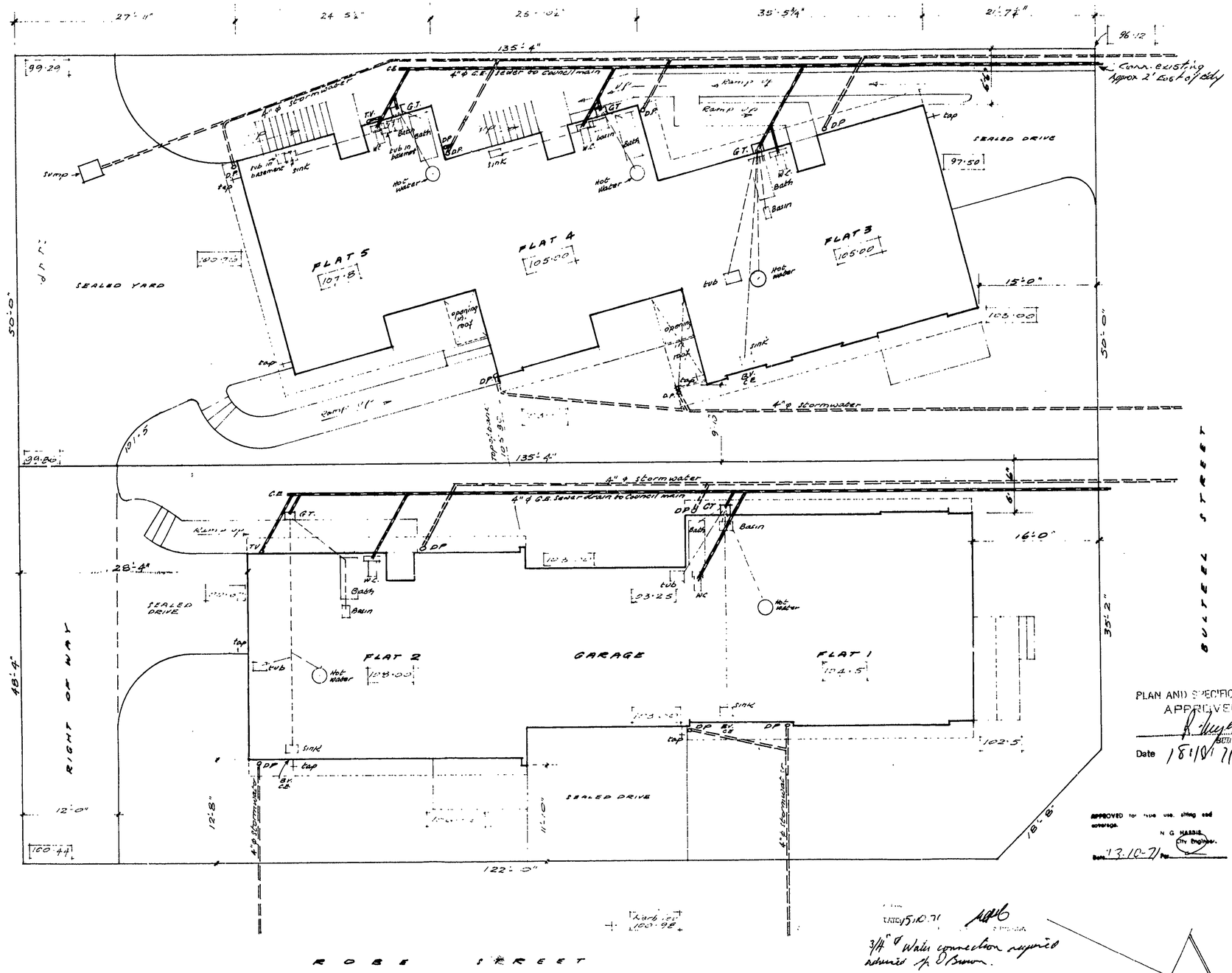

PLAN AND SPECIFICATIONS APPROVED
BUILDING INSPECTOR
Date 18/8/71

APPROVED for new use, siting and coverage.
N G HARRIS
City Engineer.
Date 13.10.71 Per

DATE 5.10.71
3/4" ø Water connection required
Advised Mr D Brown.

75-3

LEVELS: Datum 100·00' is top of fire hydrant cover in grass on East side of Robe St near its intersection with Bulteel St.

Date	REVISION	By	Approved
2.8.71	Dimens along west bdy added. " Plat 3 on east bdy added. 2 DP's flat 4 altered	DAW	JB

SITE & DRAINAGE PLAN SCALE 1/8" to 1'-0"

PROPOSED FLATS FOR
HENRY BROWN & COMPANY, LIMITED
CNR. ROBE & BULTEEL STREETS, NEW PLYMOUTH

BOWERING THOMSON BOON & ASSOCIATES
ARCHITECTS
CONSULTING ENGINEERS
TOWN PLANNERS
NATIONAL INSURANCE BUILDING
P.O. Box 195 Telephone 83947
Brougham Street New Plymouth

DRAWN BY DAW	DATE DRAWN 16/2/71
TRACED DAW	PRINTED 10 AUG 1971
CHECKED BC	JOB 502
ENGINEER	DRAWING NUMBER 1
APPROVED JB	SET OF 4

L804/4805

NEW PLYMOUTH DISTRICT COUNCIL

PRIVATE BAG 2025 NEW PLYMOUTH 4260 Ph. 06 758 8099 Fax 06 758 3757

APPLICATION FOR BUILDING CONSENT AND/OR PROJECT INFORMATION MEMORANDUM (PIM)

APPLICATION TYPE Tick boxes where appropriate

Combined Building Consent & *PIM* [✓] Project Information Memorandum Only [ ] *PIM* No. [ ]

Building Consent Only * Quote previous *PIM* number _____ [ ]

*A *PIM* is required before a building consent can be issued.

FOR OFFICE USE [ ]/[ ] · [ ]

SCALE CODE [DFA1] PROPERTY I. D. [ ]

DETAILS OF PROPERTY TO WHICH THIS BUILDING CONSENT APPLICATION APPLIES

Under the Building Act a Building Consent must be issued to the owner. The owners full name is an essential part of the application.

OWNER'S NAME: MR HOLMES

Surname or company name

First names

ADDRESS OF BUILDING WORK:

FLAT 3 / 3 BULTEEL ST

Street No. Street

NEW PLYMOUTH

Town/District

LEGAL DESCRIPTION OF PROPERTY:

Lot [ ] D.P. 10451

or Section No. [ ] District [ ]

APPLICANT'S DETAILS

Tick this box if the applicant is the owner [ ]

If the applicant *is not* the owner, please give applicant details:

Surname:

First names:

Company name: EARP ALUMINIUM LTD

Status: Builder [✓] Plumber [ ] Designer [✓]

Other (Please specify)

Document Set ID: 611007
Version: 1, Version Date: 08/07/2005

MAIL ADDRESS FOR ALL CORRESPONDENCE RELATING TO THIS APPLICATION

EARP ALUMINIUM LTD

Surname or company name

First names

91 KING ST

Street No. Street/PO/Private Bag

NEW PLYMOUTH

Town

PHONE 06 7588073 STD FAX 06 7584157 STD

DESCRIPTION OF BUILDING WORK

e.g.. garage, deck, dwelling, shop plumbing and drainage, sewerage connection

CONSERVATORY

USE OF COMPLETED BUILDING

If different to description

TYPE OF WORK

Alteration ☐ Addition ☑ Demolition ☐ New building ☐

Relocation ☐ Change of use ☐ Plumbing and drainage only ☐

TOTAL COST OF PROJECT

$ 4,500 Inc. G.S.T.

TOTAL COST OF PLUMBING AND DRAINAGE

$ Inc.. G.S.T.

STAGES

Complete only if this project is one of two or more stages

This is stage No. 1 of 1 stages

INTENDED LIFE OF BUILDING

(Under the Building Act all buildings have a minimum life of 50 years unless specified)

50 years or more ☑

or Less than 50 years ☐

Specify intended life ☐

PROJECT DETAILS

CATEGORY OF WORK

Domestic ☑ Farm ☐

Commercial ☐ Industrial ☐

AREA OF NEW BUILDING WORK

8.7 m²

Document Set ID: 611007
Version: 1, Version Date: 08/07/2005

PERSONS OTHER THAN THE OWNER OR APPLICANT ASSOCIATED WITH THIS APPLICATION

STATUS:

Status may be plumber, builder, engineer, building certifier etc.

Surname

First names

Company name

ADDRESS:

Street No. Street/PO/Private Bag

Town

PHONE: STD FAX STD

STATUS:

Status may be plumber, builder, engineer, building certifier etc.

Surname

First names

Company name

ADDRESS:

Street No. Street/PO/Private Bag

Town

PHONE: STD FAX STD

DECLARATION

This application is made by me as owner of the property.

Signature _____ *Date* _____

or

I am the applicant and have been authorised by the owner to make this applica

Signature _____ *Date* 27/5/14

NEED HELP?

Please refer any queries regarding this application to *Building Inspection Services*, phone (06) 758 8099

Document Set ID: 611007
Version: 1, Version Date: 08/07/2005

COMPLIANCE SCHEDULE DETAILS

SYSTEMS NECESSITATING A COMPLIANCE SCHEDULE

Complete for any buildings that have any of the listed features except residential dwellings, farm buildings and out buildings.

The building will contain the following (tick each applicable box and attach proposed inspection, maintenance, and reporting procedures):

- [ ] Automatic sprinkler systems or other systems of automatic fire protection
- [ ] Automatic doors which form part of any fire wall and which are designed to close shut and remain shut on an alarm of fire.
- [ ] Emergency warning systems for fire or other dangers.
- [ ] Emergency lighting systems.
- [ ] Escape route pressurisation systems.
- [ ] Riser mains for fire service use.
- [ ] Any automatic back-flow preventer connected to a potable water supply.
- [ ] Lifts, escalators, or travelators or other similar systems.
- [ ] Mechanical ventilation or air conditioning system servicing all or a major part of the building.
- [ ] Any other mechanical, electrical, hydraulic, or electronic system whose proper operation is necessary for compliance with the building code.
- [ ] Building maintenance units for providing access to the exterior and interior walls of buildings.
- [ ] Such signs as are required by the building code in respect of the above-mentioned systems.
- [x] None of the above.

OTHER SYSTEMS AND FEATURES TO BE INCLUDED IN THE COMPLIANCE SCHEDULE

Complete only if the building contains one or more of the systems listed above.

(Tick each applicable box and attach proposed inspection, maintenance, and reporting procedures):

- [ ] Means of escape from fire.
- [ ] Safety barriers.
- [ ] Means of access and facilities for use by persons with disabilities which meet the requirements of Section 25 of the Disabled Persons Community Welfare Act 1975.
- [ ] Hand-held hoses for fire fighting.
- [ ] Such signs as are required by the building code or Section 25 of the Disabled Persons Community Welfare Act 1975.

Document Set ID: 611007
Version: 1, Version Date: 08/07/2005

New Plymouth District Council 2/5 3/6 Printed:27May94 Page 1

COVER SHEET

87

BC Application No: 4805 Date Received: 27/05/94
Related: PIM Application No: 4804 Area: NPD NP DISTRICT

Name: HOLMES, Pete Ronald
Address: 3 Flat 1 BULTEEL STREET
NEW PLYMOUTH

Lot: 1
DP: 10636
Property ID:015554

Assessment: 11700/832.00A

Action No	Action	Estab	Date Returned
1	Receive/Check Information	CLERICAL	
2	Plot Application	RECORDS	
3	Compliance with District Plan	PLANNING	
4	Vehicle Crossings/Footpath Damage	STREET WKS	
5	Compliance with Building Act	BUILDING	
6	Connection/Location	SEWER/WATER	
7	Compliance with BA	PLUMB/DRAIN	
8	Approval	BUILDING	

PAID
RECEIPT NUMBER
DATE PAID
PLANS TAKEN: YES / NO

E=N=D==O=F==R=E=P=O=R=T====E=N=D==O=F==R=E=P=O=R=T=E=N=D==O=F==R=E=P=O=R=T====

	More Info Required	Applicant Phoned	Letter Sent	Amend Received	Application Correct	No. Encls (In Duplicate)
PLANNING						
PLOTTING					30.5.94	2
BUILDING					30.5.94	
P&D					2.6.94	
EHO						
SERVICES						
WATER						
STORMWATER						
SEWER						
CROSSING						

OFFICER'S SIGNATURE: Approved 3.6.94

Not Approved.....

Document Set ID: 611007
Version: 1, Version Date: 08/07/2005

New Plymouth District Council Printed:27May94 Page 1

COVER SHEET

SH 87

BC Application No: 4805 Date Received: 27/05/94
Related: PIM Application No: 4804 Area: NPD NP DISTRICT

Name: HOLMES, Pete Ronald
Address: 3 Flat 1 BULTEEL STREET
NEW PLYMOUTH

Lot: 1
DP: 10636
Property ID:015554

Assessment: 11700/832.00A

Action No	Action	Estab	Date Returned
1	Receive/Check Information	CLERICAL	
2	Plot Application	RECORDS	30·5·94 (2)
3	Compliance with District Plan	PLANNING	
4	Vehicle Crossings/Footpath Damage	STREET WKS	
5	Compliance with Building Act	BUILDING	
6	Connection/Location	SEWER/WATER	
7	Compliance with BA	PLUMB/DRAIN	
8	Approval	BUILDING	

E=N=D==O=F==R=E=P=O=R=T====E=N=D==O=F==R=E=P=O=R=T=E=N=D==O=F==R=E=P=O=R=T====

NP

NOT APPROVED PLANNING*

/ /
Sign/Date

Reason(s)

☐ Bulk/Location ☐ Parking/Load
☐ Resource Consent ☐ Landscaping
☐ Trees/Historic ☐ Hazard

Other: .....

* Warning Required if B.C. Issued

APPROVED PLANNING

31 / 5 / 90
Sign/Date

B.C. Conditions Required

☐ S.36 B.A. ☐ S.37 B.A.
☐ Landscaping ☐ R.C. Cond.
☐ Trees/Historic ☐ .....

Other: .....

ACTIONS	DATE/INIT
R	

Document Set ID: 611007
Version: 1, Version Date: 08/07/2005

New Plymouth District Council Printed:27May94 Page 1

COVER SHEET

SSh6 87.

BC Application No: 4805 Date Received: 27/05/94
Related: PIM Application No: 4804 Area: NPD NP DISTRICT

Name: HOLMES, Pete Ronald
Address: 3 Flat 1 BULTEEL STREET
NEW PLYMOUTH

Lot: 1
DP: 10636
Property ID:015554

Assessment: 11700/832.00A

Action No	Action	Estab	Date Returned
1	Receive/Check Information	CLERICAL	
2	Plot Application	RECORDS	
3	Compliance with District Plan	PLANNING	
4	Vehicle Crossings/Footpath Damage	STREET WKS	
5	Compliance with Building Act	BUILDING	
6	Connection/Location	SEWER/WATER	
7	Compliance with BA	PLUMB/DRAIN	
8	Approval	BUILDING	

E=N=D==O=F==R=E=P=O=R=T====E=N=D==O=F==R=E=P=O=R=T=E=N=D==O=F==R=E=P=O=R=T====

	More Info Required	Applicant Phoned	Letter Sent	Amend Received	Application Correct	No. Encls (In Duplicate)
PLANNING						
PLOTTING					20 5 94	2.
BUILDING						
P&D						
EHO						
SERVICES						
WATER						
STORMWATER						
SEWER						
CROSSING						

OFFICER'S SIGNATURE: Approved.....

Not Approved.....

Document Set ID: 611007
Version: 1, Version Date: 08/07/2005

PROJECT INFORMATION MEMORANDA

(Please mark appropriate box. If there is knowledge relating write comment below.)

LAND

- ☐ EROSION
- ☐ AVULSION
- ☐ FALLING DEBRIS
- ☐ SUBSIDENCE
- ☐ SLIPPAGE
- ☐ ALLUVION
- ☐ INUNDATION
- ☐ HAZARDOUS CONTAMINANTS
- ☐ FILL

UTILITIES

- ☐ WATER
- ☐ SEWER
- ☐ STORMWATER
- ☐ INTERNAL DRAINS
- ☐ GAS
- ☐ ELECTRICITY
- ☐ VEHICULAR ACCESS
- ☐ UTILITIES PROTECTION
- ☐

OTHER CONSENTS/AUTHORISATIONS:

SECTION	INFORMATION FROM:	INITIAL & DATE

Vehicle Entrance

Width of vehicle crossing required .....MR..... LD/HD

Crossing Fee $..... Instruction No: .....

Document Set ID: 611007
Version: 1, Version Date: 08/07/2005

Project Information Memorandum No:4804
Section 31, Building Act 1991

Issued:14Jun94

CONTACT : EARP ALUMINIUM LTD
C/- EARP ALUMINIUM LTD
91 KING STREET
NEW PLYMOUTH

OWNER : MR PR HOLMES
C/- EARP ALUMINIUM LTD
91 KING STREET
NEW PLYMOUTH

Application received: 01Jun94

PROJECT LOCATION

Street Address: 3 Flat 1 BULTEEL STREET, NEW PLYMOUTH
Property ID: 015554
Assessment No: 11700/832.00A
Legal: FLAT 3 GRGE 3 DP 10636 HAVING 1/3 INT IN 617 SQ METRES BEING LOT

PROJECT

The project is for Additions
Intended Use(s): Residential
Intended life: Indefinite but not less than 50 years
Value of Work: $4,500.00

COUNCIL CHARGES

The Council's total charges payable on the uplifting of this project memorandum in accordance with the attached details, are: $0.00

Document Set ID: 611007
Version: 1, Version Date: 08/07/2005

1: WHAT IS A PIM?

Section 31 to the Building Act 1991 requires that the Council provides a PIM prior to (or as part of) the issue of a Building Consent.
This PIM or "Project Information Memorandum" is a statement by the Council of the known information about the property to the extent it is relevent to the intended "project".
It will usually include other information stating or giving guidance as to the extent of compliance with the Building Act and the District Plan. However these comments will be limited to the extent and accuracy of the information provided. A Certificate of Compliance under the Resource Management Act 1991 should be sought where confirmation that the proposed complies is required.

2: CAN BUILDING WORK PROCEED?

YES- This PIM consent confirms that the proposed building work may be undertaken subject to the conditions of the accompanying Building Consent and any relevent provisions of the Building Act 1991.

3: Authorisations and Requirements that will need to be met in respect of the proposed work and District Plan compliance:

No other authorisations or requirements identified as part of this PIM.
If this is a PIM only application there are no identified areas of non-compliance with the District Plan. In the case of a combined PIM/Building Consent application such matters will be dealt with as part of the Building Consent.

4: Consent Applications lodged with the Council applying to the project or the site:

No current Resource Consents relevant to project.

5: Authorisations Refused for the proposed project:

No known refused authorisations.

6: Classified Land,Buildings, features, utilities or works that could be affected by the proposed work:

No information relevent to this project regarding classified land or buildings, known to this Council.

7: Fill:

No known fill.

8: Slippage:

No information, requirements or comments relevent to this project.

9: Erosion:

Document Set ID: 611007
Version: 1, Version Date: 08/07/2005

No information relevent to this project regarding erosion, known to or held by this Council.

10: Flooding:

No information requirements or comments relevent to this project.

11: Faultlines:

No known faultlines.

12: Other Hazards:

No other known hazards.

13: Reserve Contribution on Development (refer Section 294 to the Local Government Act 1974):

Reserve Contribution on Development is not applicable to this project.

14: Sewer Services and Sewage Disposal:

No requirements or comments relevant to this project.

15: Stormwater Service and Disposal Requirements:

No requirements or comments relevant to this project.

16: Sewer and Water Disc ctions:

Sewer or water disconnection not applicable to this PIM.

17: Water Services:

Please note that where the Council is installing a water connection the responsibility of the Council is from the main up to and including the connection box (toby) only.

No requirements or comments relevant to this project.

18: Rural Fire Fighting:

In Rural situations water tanks can provide a source of water for fire fighting purposes. If water tanks are being installed as part of this project please take care to locate the tanks in a location where they will be accessible if a fire emergency occurs.

19: Councils Drainage and Services Records:

A copy of the Councils Service Records relating to the property will be enclosed as part of this PIM if relevent to the project.
This information will include where available and relevent to the project:

* A copy of the drainage record card showing drains within the property.
* A plan of water reticulation in the vicinity of the property.

Document Set ID: 611007
Version: 1, Version Date: 08/07/2005

* A plan of sewer reticulation in the vicinity of the property.
* A plan of stormwater reticulation in the vicinity of the property.

The Councils records are in some cases incomplete and relevent information may in some cases be missing.
If you have any queries regarding such matters please contact the Councils Public Health Divisions Customer Services Officer in regard to connection to services and services outside the property boundary or the Councils Plumbing & Drainage Inspectors in relation to drains within the property.

20: Vehicle Crossing Requirements:

No requirements or comments relevant to this project.

21: Installation of vehicle crossings by contractors:
Applies only to Contractors carrying out large scale Commercial or Industrial projects.

No requirements or comments relevant to this project.

22: Rural Access Requirements:

No requirements or comments relevant to this project.

23: Limited Access State Highways:
These are generally administered by Transit New Zealand and not the Council. Restricted access provisions apply.

No requirements or comments relevant to this project.

24: Footpath Damage Deposits:

No requirements or comments relevant to project.

25: Compliance with Building Code:
This section of the PIM identifies areas of non compliance with the Building Code (if any) apparant from the information provided. It is not intended to be a full check for compliance.

No requirements or comments relevant to this project.

26: Complaints received by the Council regarding the construction of any existing buildings related to the project:

No complaints recorded relevant to this project.

27: Engineering Design Required:

No requirements or comments relevant to this project.

28: Site Reports Required:

No requirements or comments relevant to this project.

29: Reports on the Existing Building Required:

Document Set ID: 611007
Version: 1, Version Date: 08/07/2005

No requirements or comments relevant to this project.

30: Compliance Schedule Matters: (Refer Section 44 of the Building Act 1991)

No requirements or comments relevant to this project.

31: Endorsement of Certificate of Title:
Section 36 to the Building Act 1991 provides for the endorsement of Certificates of title where the site of the project is subject to a known hazard but the project is still allowed to proceed where the degree of risk is acceptable and the Council is indemnified against loss.

No requirements or comments relevant to this project.

32: Multi Title Developments:
Section 37 of the Building Act 1991 provides that where a project is located on 2 or more sites under the same ownership, the Council may approve the development subject to a certificate being prepared and lodged with the District Land Registrar requiring that the sites shall not be transferred or leased seperatly.

No requirements or comments relevant to this project.

33: Sign Off

Approving Officer.....

Date.../.../....

Document Set ID: 611007
Version: 1, Version Date: 08/07/2005

Building Consent No:4805
Section 35, Building Act 1991

Issued:14Jun94

CONTACT : EARP ALUMINIUM LTD
C/- EARP ALUMINIUM LTD
91 KING STREET
NEW PLYMOUTH

OWNER : MR PR HOLMES
C/- EARP ALUMINIUM LTD
91 KING STREET
NEW PLYMOUTH

Application received: 01Jun94

PROJECT LOCATION

Street Address: 3 Flat 1 BULTEEL STREET, NEW PLYMOUTH
Property ID: 015554
Assessment No: 11700/832.00A
Legal: FLAT 3 GRGE 3 DP 10636 HAVING 1/3 INT IN 617 SQ METRES BEING LOT

PROJECT

The project is for Additions
Intended Use(s): Residential
Intended life: Indefinite but not less than 50 years
Value of Work: $4,500.00

COUNCIL CHARGES

The Council's total charges payable on the uplifting of this building consent in accordance with the attached details, are: $0.00

Receipt number:	59423	Date:	01Jun94	Amount:	$54.00
Receipt number:	59684	Date:	14Jun94	Amount:	$18.00

Document Set ID: 611007
Version: 1, Version Date: 08/07/2005

1: CONDITIONS APPLYING TO THIS BUILDING CONSENT:

There are no special conditions applying to the issue of this Building Consent.

2: Issue Phrase Options

This Building Consent is issued under the Building Act 1991. The project may be undertaken in accordance with the approved plans, specifications and any conditions specified.
Duties and responsibilities under any other Act are unaffected by this consent.

Approving Officer .....

Date .../.../...

Document Set ID: 611007
Version: 1, Version Date: 08/07/2005

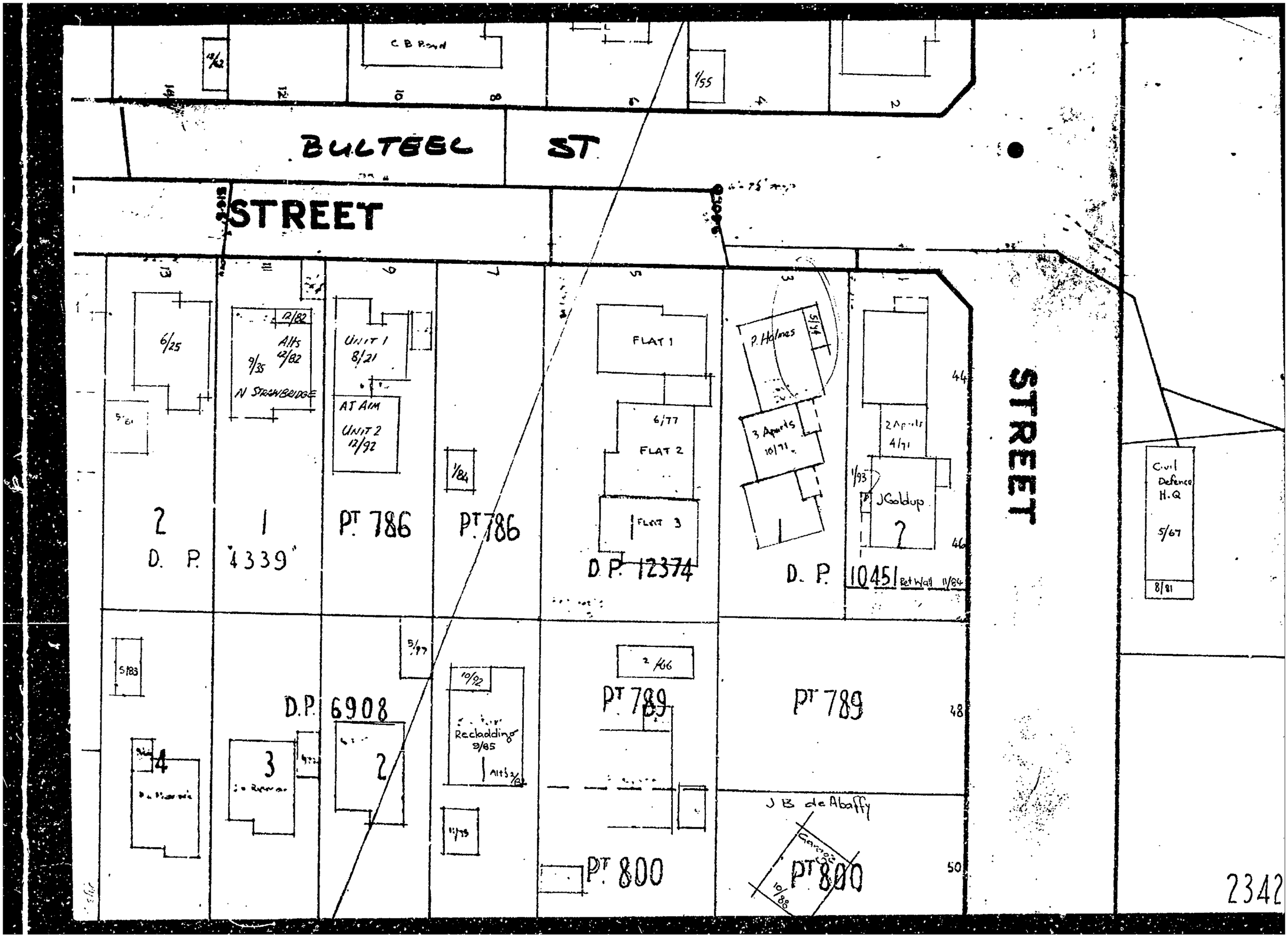

Document Set ID: 611007
Version: 1, Version Date: 08/07/2005

Plan Number No. 10451
Title Reference C2/566

Land and Deeds Plan
Firm Sexton, Christie & McKolay
Date 28.7.72 Fee $10.00
Time 11.0 a.m. Abstract No.
Plan Required

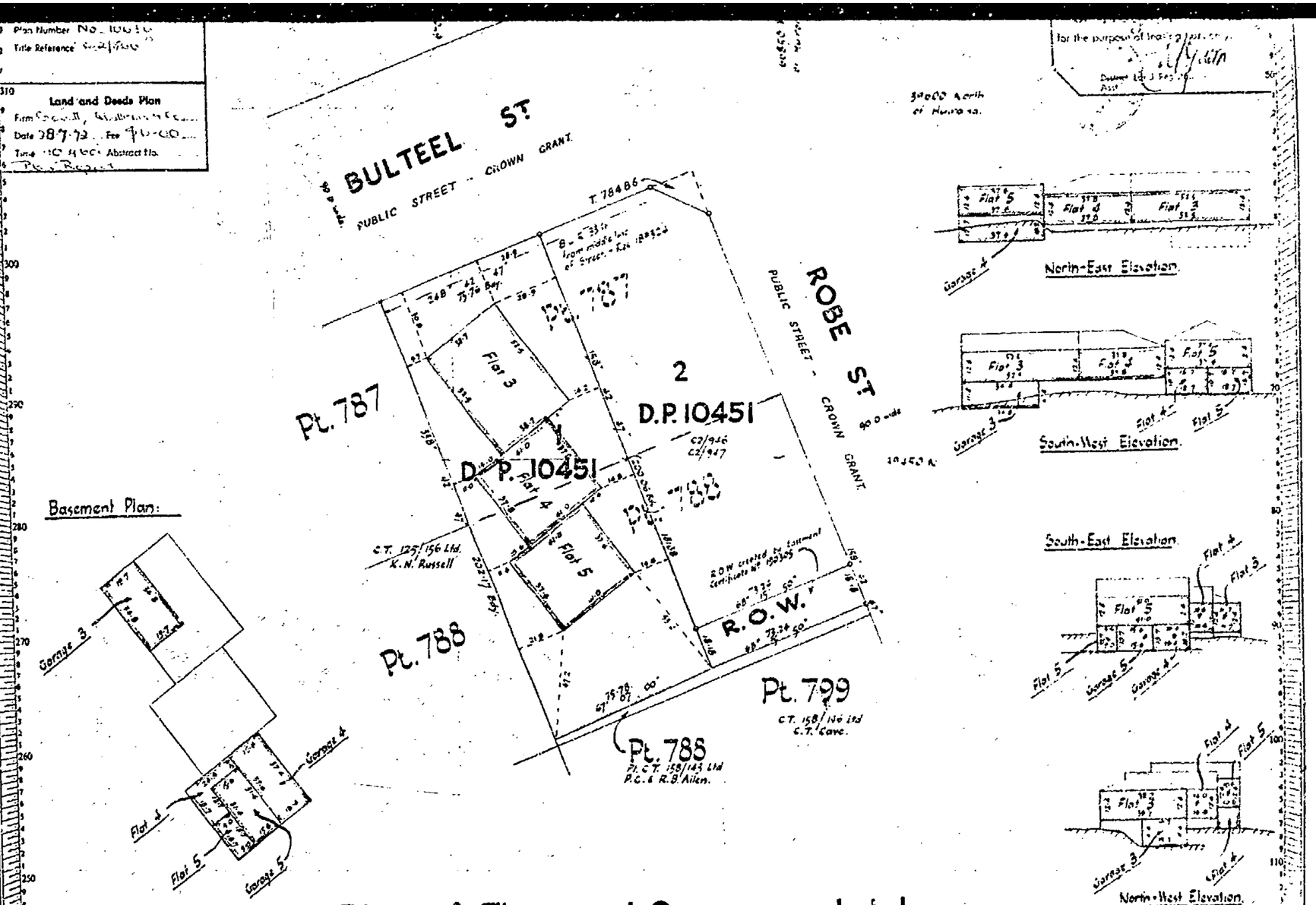

Plan of Flats and Garages on Lot 1, D.P. 10451, being Pt. Secs. 787 & 788, Town of New Plymouth.

Total Area: 0 0 24·4

For Surveyor's Inspection
File 5/112 August 1972.

Approved for the purpose of leasing flats only.
Land Transfer surveyor
17/8/72
Received 28.7.72
Reference plans D.P. 10451
Field book 1338 p 36
Examined by
Recorded

Comprised in CT C2/566 (All).
Survey Block & District Y Paritutu
Land District Taranaki Local Body New Plymouth City Council
Scale 30 links to an inch Surveyed by Sexton, Christie & McKolay Date June 1972

I, Colin Peter Forbes Mavinlay Registered Surveyor, hereby certify that the positions of the buildings shown hereon are correct in relation to the Certificate of Title boundaries and that the position of each flat (and garage) is correct in relation to the building of which it forms part.

Approved

Applicant or Registered Owner

Document Set ID: 611007
Version: 1, Version Date: 08/07/2005

4804/690S

RYLOCK NEW PLYMOUTH

30 MAY 1994

ALUMINIUM JOINERY ◆ GARAGE DOORS ◆ DOOR OPENERS

Proposed Conservatory : MR & MRS HOLMES
FLAT 3 / 3 BULTEEL ST
NEW PLYMOUTH.

Please Note : The area we propose to place conservatory already has timber & glass screens!

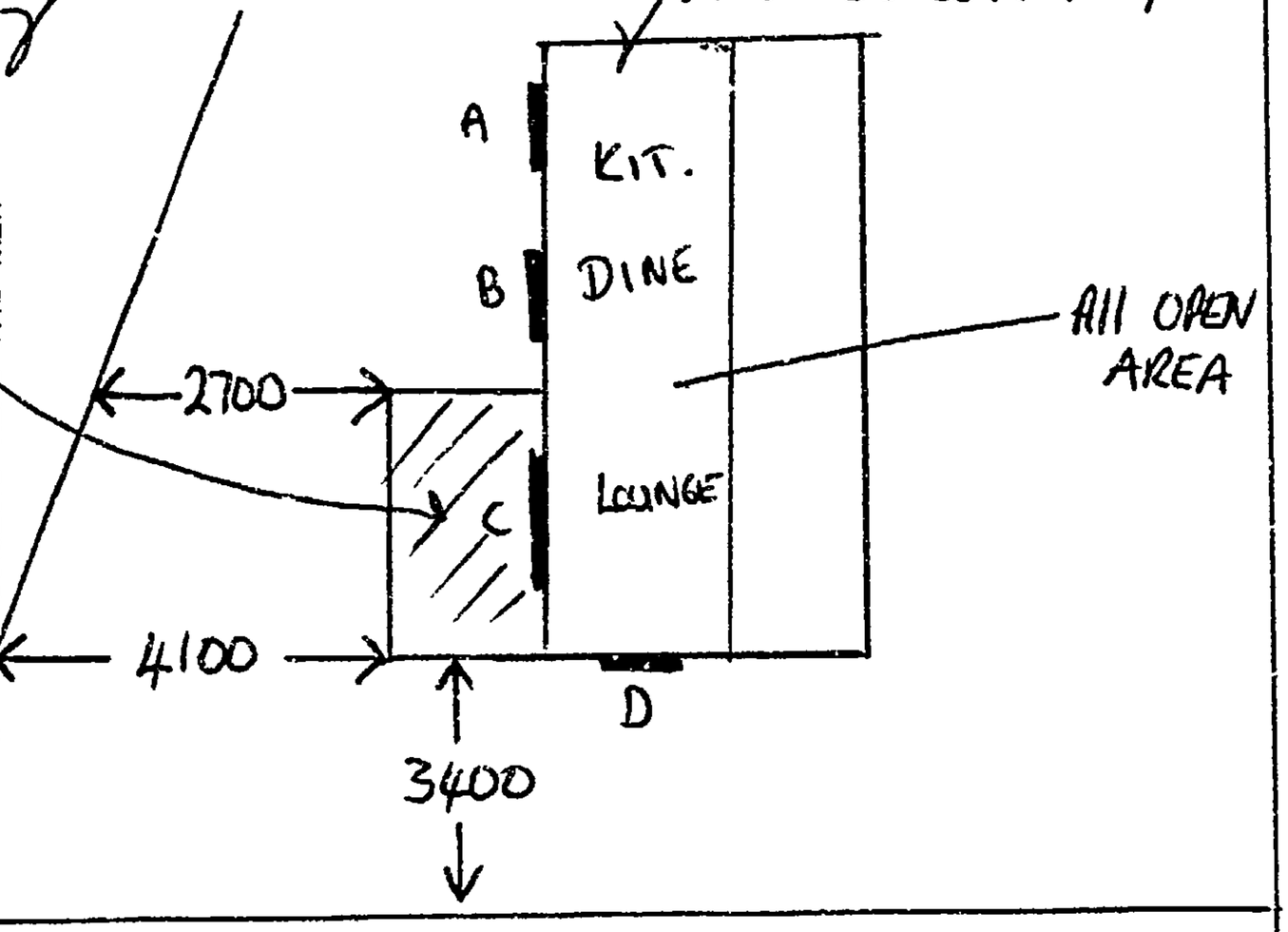

NEW PLYMOUTH DISTRICT COUNCIL
PLANS AND SPECIFICATIONS APPROVED FOR TYPE, USE, SITING, COVERAGE AND CONSTRUCTION, AS IN ACCORDANCE WITH ALL RELEVANT ACTS REGULATIONS AND BY-LAWS ADMINISTERED BY THE NEW PLYMOUTH DISTRICT COUNCIL.

		DATE
PLANNING		
PUBLIC HEALTH		
BUILDING		2.6.94

THESE PLANS AND SPECIFICATIONS ARE THE PROPERTY OF THE NEW PLYMOUTH DISTRICT COUNCIL AND MUST BE KEPT ON SITE.

* Conservatory to be erected onto existing concrete base 600 mm above groundline.

* Stormwater to existing drainage.

* Overall Height of overall conservatory from groundline = 2865.

EARP ALUMINIUM LIMITED ◆ 91 KING STREET NEW PLYMOUTH ◆ PHONE 0-6-758 8073, FAX 0-6-758 4157

Document Set ID: 611007
Version: 1, Version Date: 08/07/2005

NAME MRS HOLMES

ADDRESS FLAT 3 / 3 BULTEEL ST
NEW PLYMOUTH.

PHONE

DATE ORDERED
DATE REQUIRED
DATE DELIVERED

TAX INVOICE

G.S.T. Registration No. 15-771-992

CONTRACT

PHONE

Location		Code	Description & Drawing	Tran/Mull	Sash	Glass	Reveals
			600 — 100 mm Fall in Roof				
			300				
			2265 2160				
			670 F F				
			1700				
			500 2265 2160 F F 1700 — 2865 to groundline				
			4 x PATIO BOLTS Plus Extra holes at 100 mm.				
			1400 1400 670 2160 2760 to ground				
			5130 (ba 100 ← 5030 — GROUNDLINE				
			THERMOROOF				
			ordered 4 @ 1400 plus stock.				
Quickset							
Pack Fascia			NOTE: WOULD COST. $ 490-00 EXTRA				
2x1			FOR SOLAR TINT ✓✓				
+ 3m Sawn Tan Cedar							
+ 50 Stud x HEBEX			Cut R/S into Concrete !!				
200 mm Overhang			3 Sides				

SILVER [ ] WHITE [ ] BRONZE [✓] VARIATIONS

REVEALS PLAIN [ ] REVEALS GROOVED [ ] T.W.T. [ ] ACTUAL [ ]

OBSCURE GLASS SOLAR BRONZE [✓] SOLAR GREY [ ]

COL' OBSCURE GLASS

INSTALL [✓]

DELIVER [ ]

CUSTOMER TO COLLECT [ ]

ADVISE CUSTOMER [ ]

Document Set ID: 611007
Version: 1, Version Date: 08/07/2005

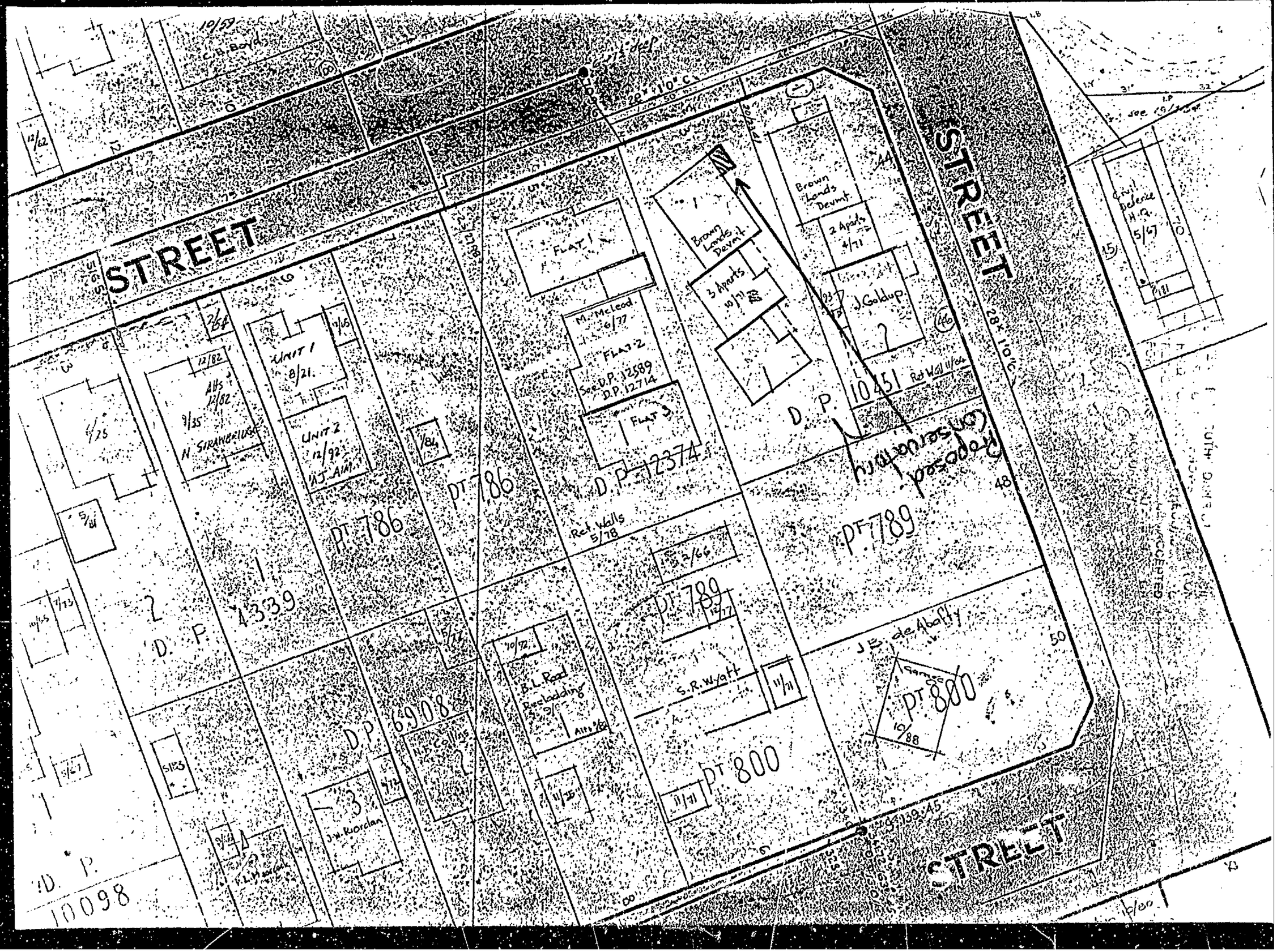

Document Set ID: 611007
Version: 1, Version Date: 08/07/2005

...ns On Use

...ments, or alterations ... Rudnev (NZ) Limited should be ... for specialist advice on alternative ... specifications which will offer enhanced ... performance.

...achieve maximum performance from Rudnev ... Construction Systems, all filing, cutting and sealing ... be in accordance with the construction ... specified by Rudnev (NZ) Limited.

...aterials and Manufacture

...nel Skins

...anised steel coil manufactured to NZS ... 1978, base thickness 0.53mm with hot dipped ... coating to ZM 300 class. Coil continuously ... roll to core with mild rib indents formed in ... face and panel edges roll-formed to standard ... dimensions.

...esive

...thosetting 2-part polyurethane, bonding ... under pressure.

...

...m-250mm thick, self-extinguishing 'S' ... moulded polystyrene sheet manufactured to ... 1.3', kiln-dried and stress relieved. ... panel edges to accept jointing system.

...and Adoption applied for.

...l System — SMP Panels

...h coat of heat-cured silicone modified ... paint to a dry film thickness of 20 ± 4 ... metres. Finish coats are applied over a ... corrosion inhibitive primer after an alkaline cleaned ... acid sealed zinc phosphate pre-treatment.

...anical Properties

...chanical strength of a Rudnev Panel is ... by laminated bonding of the separate ... elements into a single strong structural unit. The ... strength outer skins carry most of the tension ... compression loads, while the polystyrene core ... both to stabilise the outer skins against ... and resist shear stresses. Strength is a ... of panel thickness as the following table ...

... NZS 4203:1984, with 33% stress increase allowed under wind load.

(2) Ceiling spans calculated on panel dead load plus 0.25 Kpa live load.

(3) These spans are based on typical project designs incorporating a number of variable design factors. Full engineering calculations should be carried out for specific projects. Design services available from Rudnev (NZ) Ltd.

THE MECHANICAL PROPERTIES SHOWN ARE BASED ON TESTS OF PANEL MANUFACTURED BY RUDNEV (NZ) LTD AND ARE NOT NECESSARILY APPLICABLE TO ANY OTHER PANELS.

Vapour Barrier

Panel Skins are impermeable to moisture and edge sealing is achieved with neutral curing silicone or butyl mastic sealants and aluminium extrusions.

Insulation Properties

Rudnev Panels have the following 'R' values:

Panel Thickness (millimetres)	Mean Face Temp (°C)	'R' Value* (m² °C/W)
50 mm	25°	1.59
100 mm	25°	2.93
150 mm	10°	4.54
250 mm	10°	7.46

*As determined by NZS 4214:1977, total 'R' value for ceiling panels.

Thermal Bridging

No thermal bridges are created with standard Rudnev Construction Systems. Full thermal insulation thickness can be maintained throughout the panel structure.

Unlike other thermal insulation materials, the long-term performance of EPS does not alter. EPS is dimensionally stable and will not settle, there is no capillary action and moisture absorption is minimal.

Maximum continuous service temperature is 80°C. Rudnev EPS will stand short term temperatures in excess of this rating dependent on structural loadings. Please consult Rudnev (NZ) Limited for further advice on such applications.

Document Set ID: 611007
Version: 1, Version Date: 08/07/2005

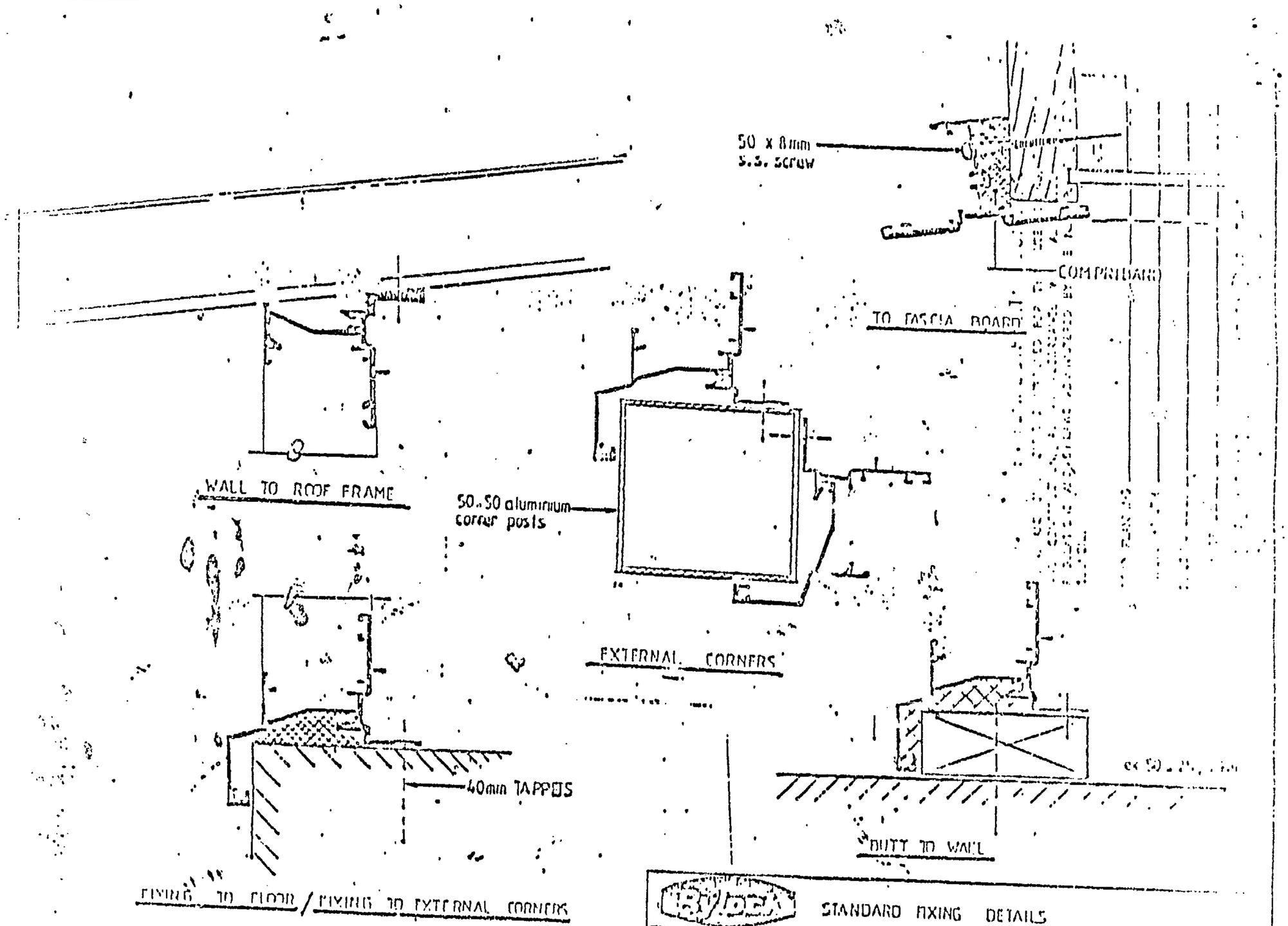

STANDARD FIXING DETAILS

EARP ALUMINIUM
91 KING STREET NP 00.073

SCALE 1:1

DATE MAR '85

DRAWN

APPROVED

Document Set ID: 611007
Version: 1, Version Date: 08/07/2005

14
ML

BUILDING CONSENT

67732P

PROPERTY ID 015555
015553

67732P

EXTRA INFORMATION/AMENDMENTS

Charge: $

Job: Zalba

Consent No: 67732.

Address: 3 Bulteel St
NP

The changes covered by this amendment are:

Info as requested - see attached letter

Formal Declaration – (Please read carefully prior to signing)

*This **AMENDMENT** to the abovementioned Building Consent is made by me as **owner** of the property:*

Signature: Date:

OR *I am the applicant **authorised by the owner** to make this **AMENDMENT:***

Signature: Date:

Office use only

Approved	Refused

Records	
Building	
gb. 9.2.05	
Public Health	
District Planning	

Queries answered. OK to issue DB.

This Building Consent is approved
Building Act and is limited to new work only as
shown on these plans and related specifications
Approved..... Date 25-7-05

26 JUL

73241/73242 22/7/05

Smoke detectors are required as part of this project

FLAT 4

FLAT 5

EAST ELEVATION

25'-0"

12'-0"

8'-0"

3'-8"

BATH

KITCHEN

DINING-LIVING

BEDROOM

TERRACE

GARDEN

AREA

FLAT 4

FLAT 5

FLOOR PLAN

FIRE SITE

FIRE STANDING IN FRONT OF WALL

SMOKE ALARM SITE

10 25

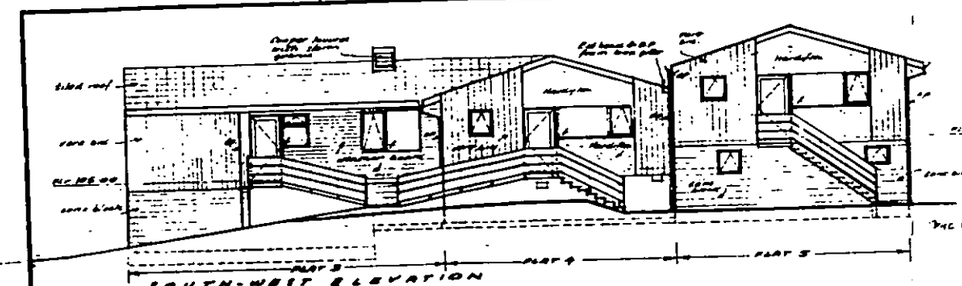

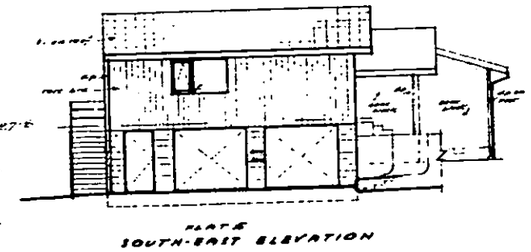

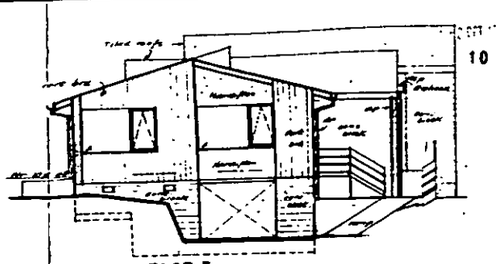

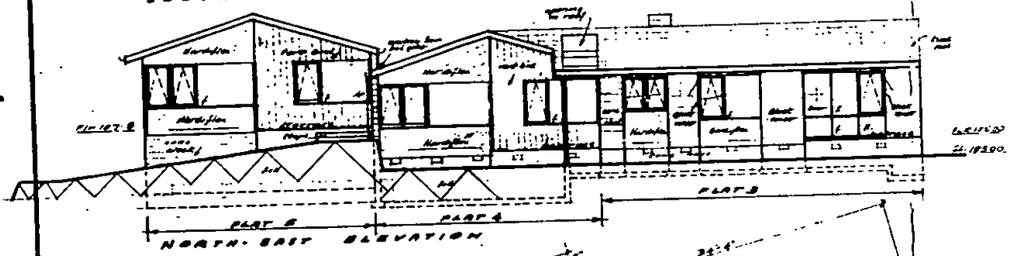

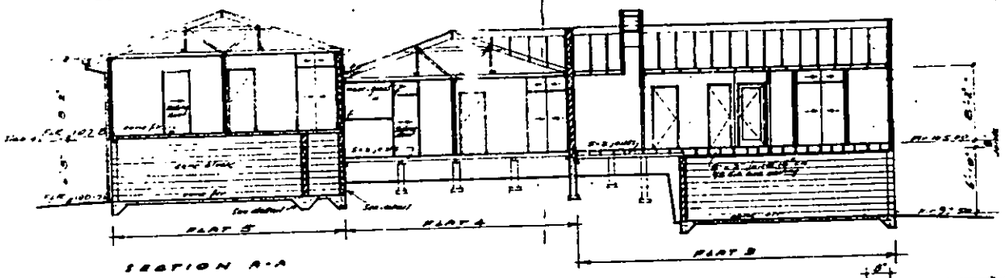

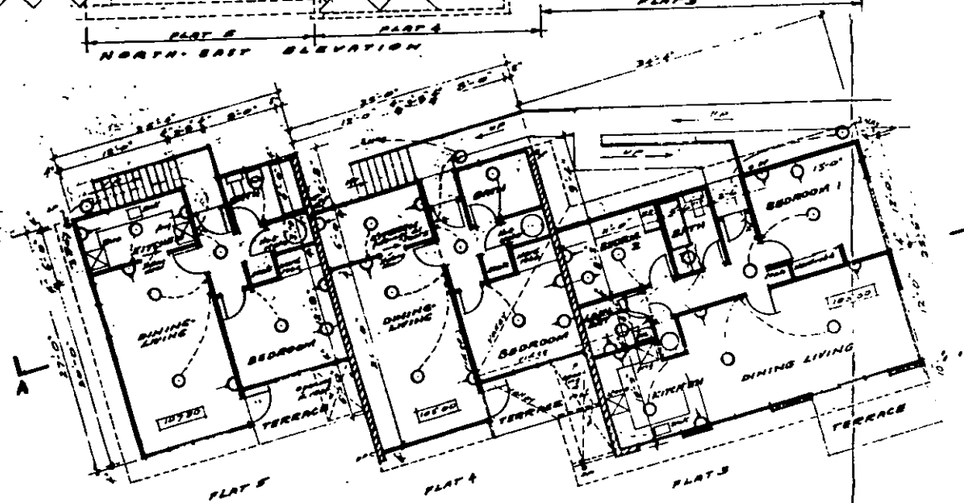

Records only
Not part of this application

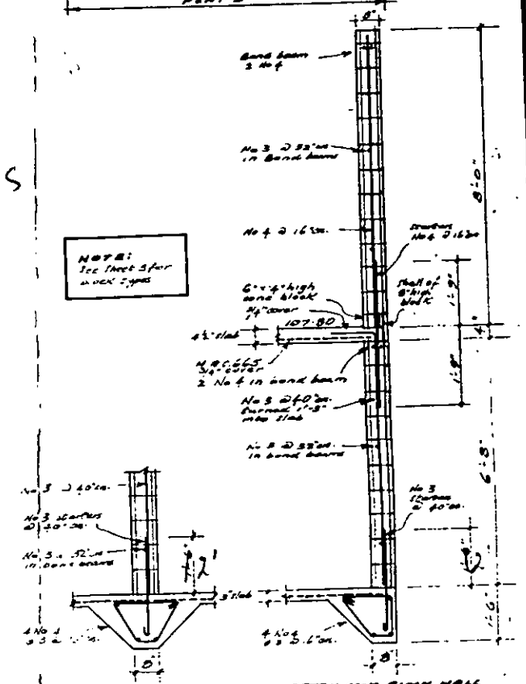

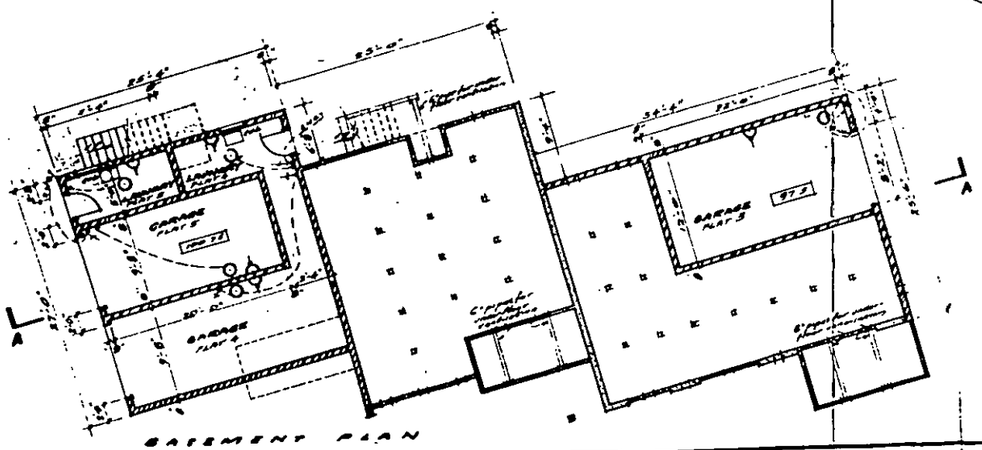

75-3

LEVELS - Datum 100.00 is top of fire hydrant cover in grass on east side of Rose St. near its intersection with Bulteel St.

Date	REVISION	By	Approved
5.3.71	Detail Block wall Flat 5	J.A.B.	R.G.B.

1/8" SCALE PLANS, ELEVATIONS & SECTIONS FLATS 3, 4 & 5
DETAILS SCALE 1" = 1'-0"

PROPOSED FLATS FOR
HENRY BROWN & COMPANY, LIMITED
CNR. ROSE & BULTEEL STREETS, NEW PLYMOUTH

BOWERING THOMSON BOON & ASSOCIATES
ARCHITECTS
CONSULTING ENGINEERS
TOWN PLANNERS
NATIONAL INSURANCE BUILDING
P.O. Box 195 Telephone 83949
Brougham Street New Plymouth

DRAWN BY R.W.	DATE DRAWN 2/3/71
TRACED R.W.	PRINTED 10 AUG 1971
CHECKED JAB	JOB 502
DESIGNED R.G.B.	DRAWING NUMBER 4
APPROVED RGB	SET OF 4

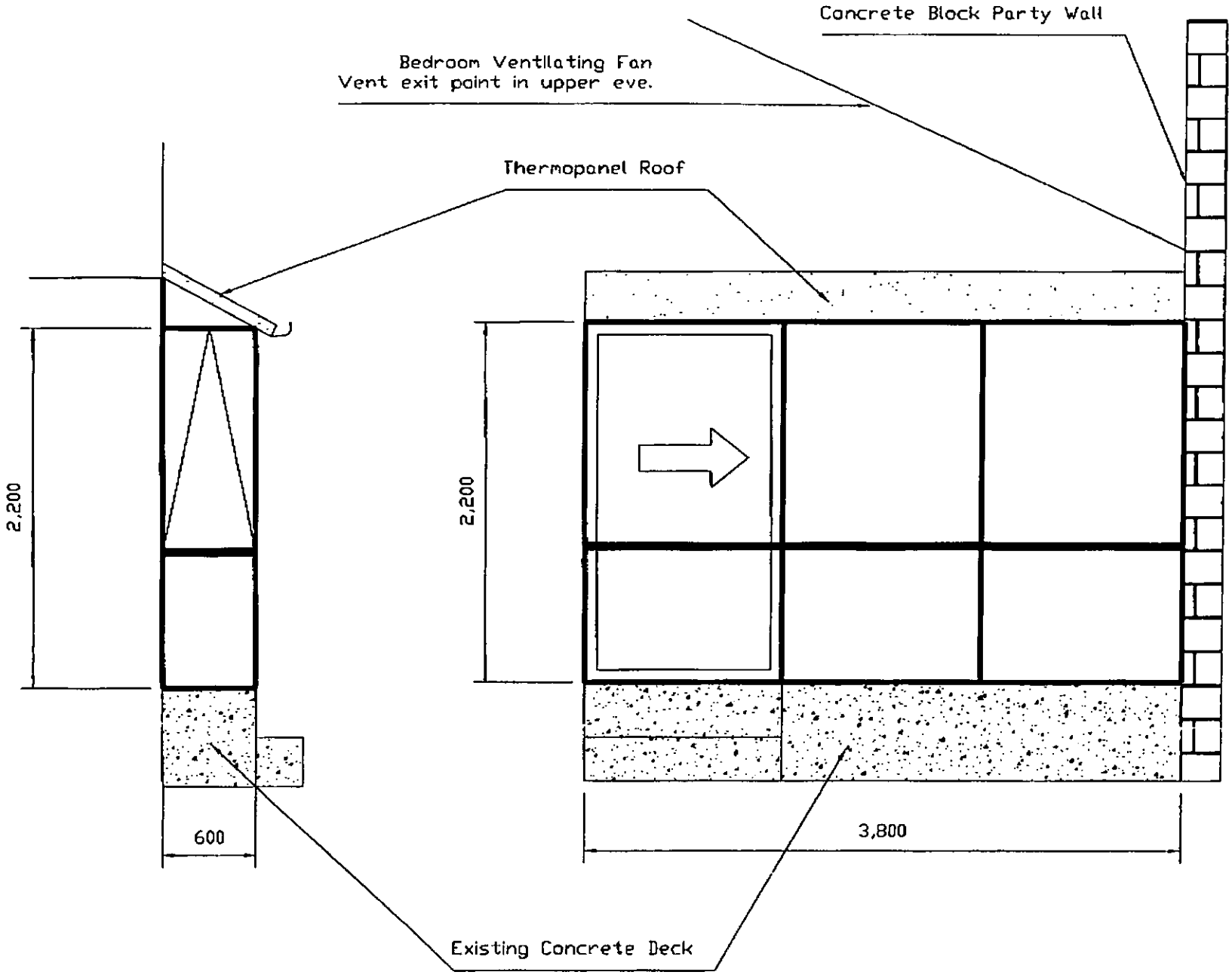

Smoke detectors are required as part of this project

NPDC OFFICE COPY
This Building Consent is approved under the Building Act and is limited to new work only as shown on these plans and related specifications
Approved ..... Date 15-2-05

67731 / 67732

NPDC Approved
15 FEB 2005

Mzarose or similar ventilation fan to bedroom
Smoke detectors to comply with F7.

DRAINAGE PLAN SCALE

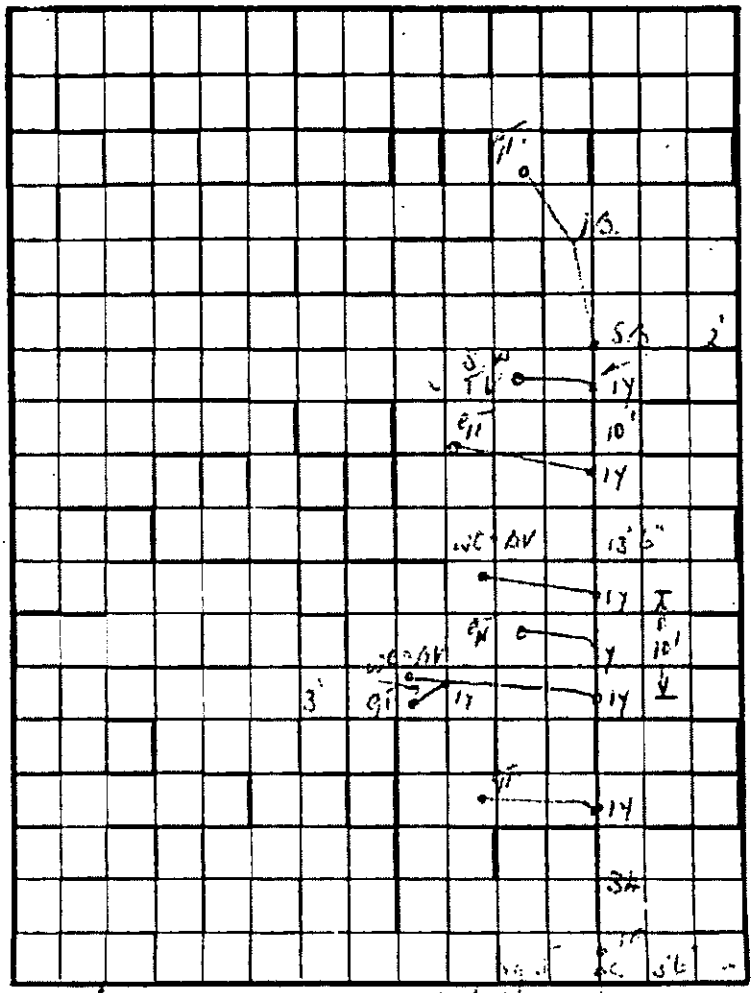

FRONTAGE

3 Bolteel St.

Masterprint 8958

Site Plan - Zalba
Proposed Conservatory
~~3/2~~ 2/3 Bulteel St
New Plymouth

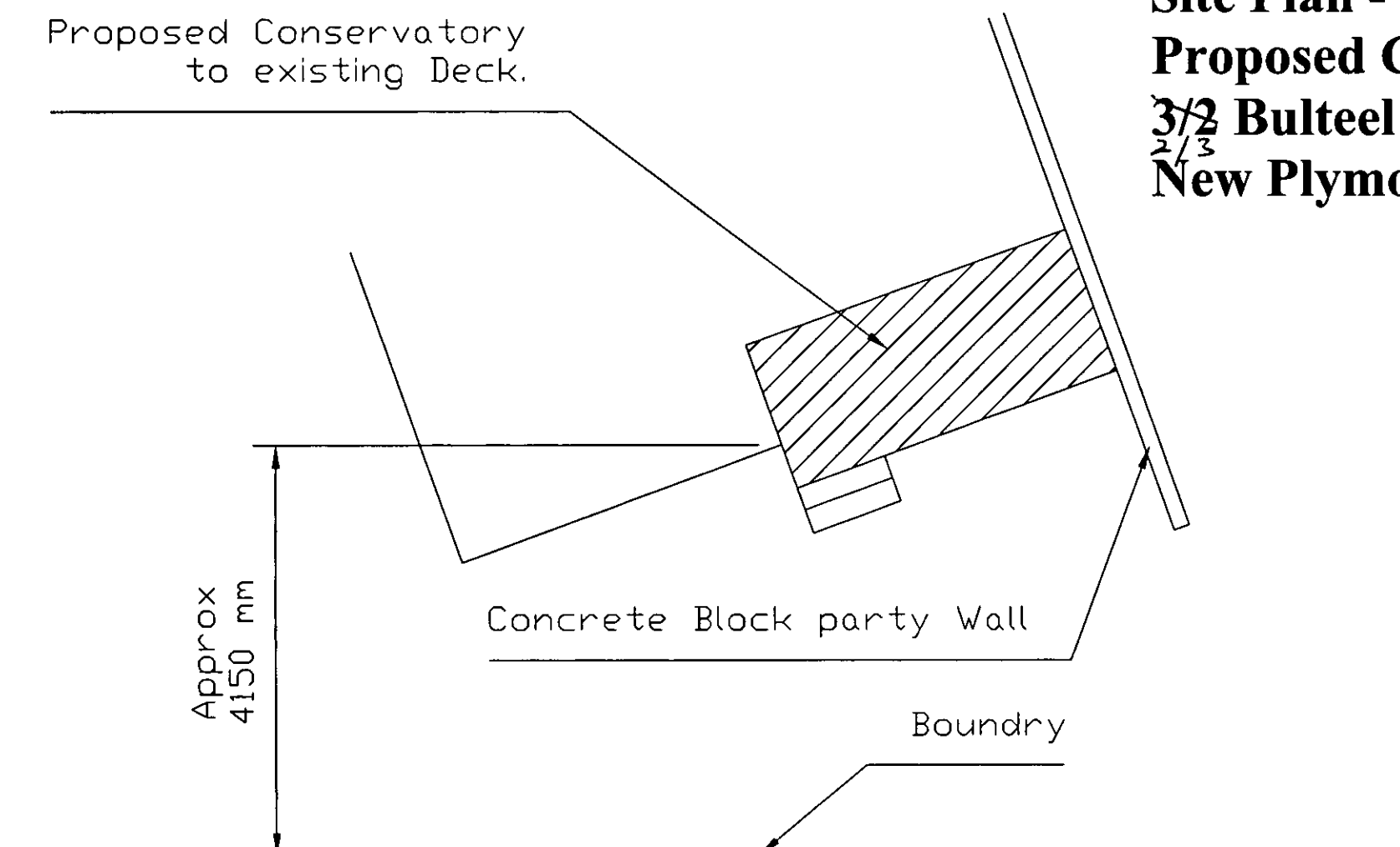

NPDC Approved
15 FEB 2005

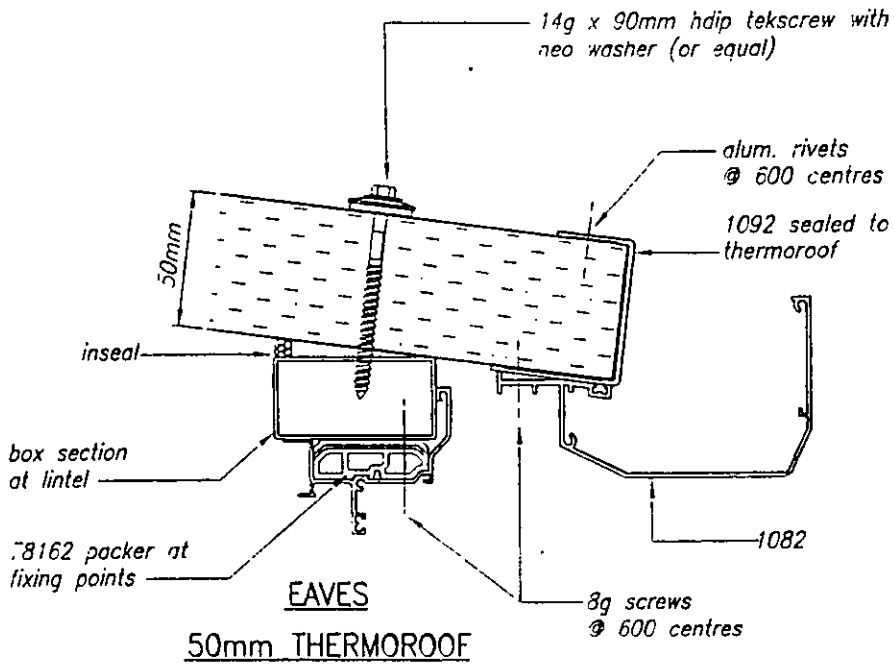

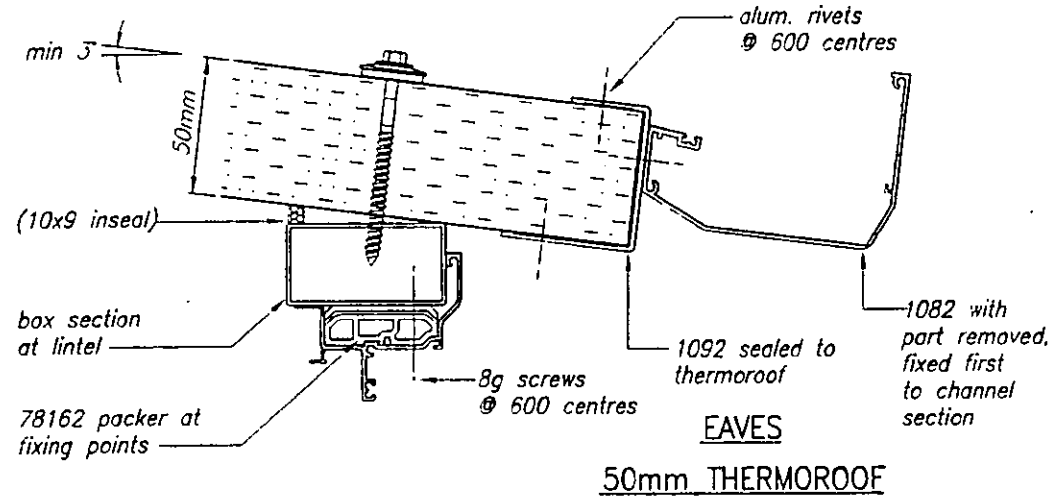

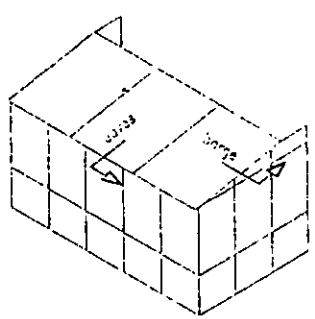

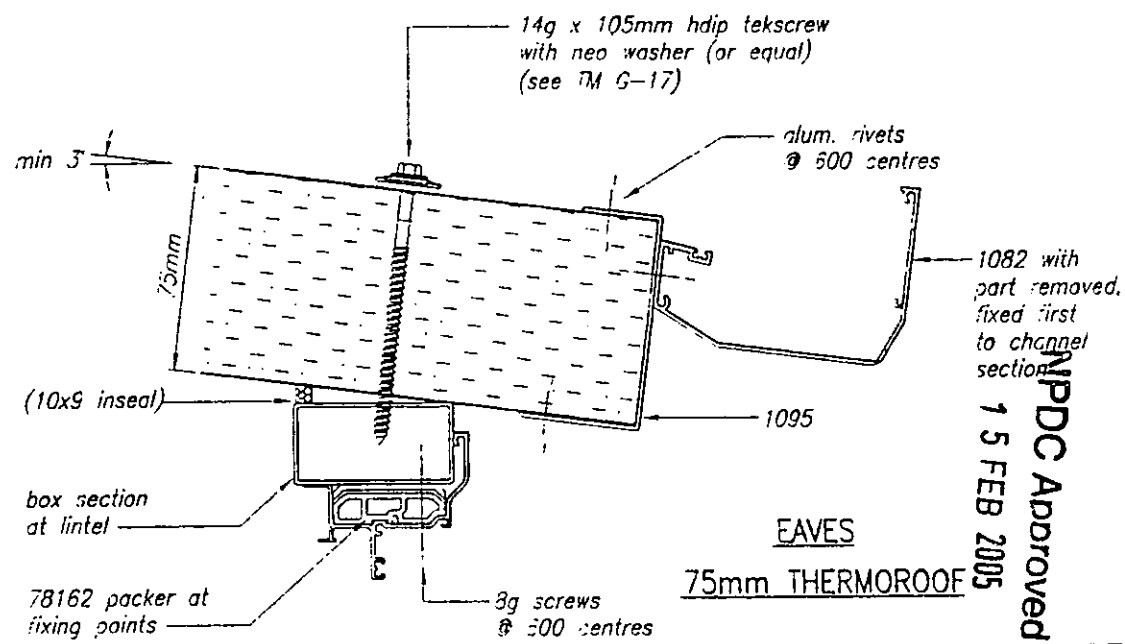

NPDC Approved
15 FEB 2005

Manufacturing Details 1000 SERIES CONSERVATORY	THERMOROOF EAVES	Drawn by: Dennis Pool Date drawn: 14-07-98 Reference: 01-03-129 Scale: 1:2 Original A3	Section 5 - Sheet 11

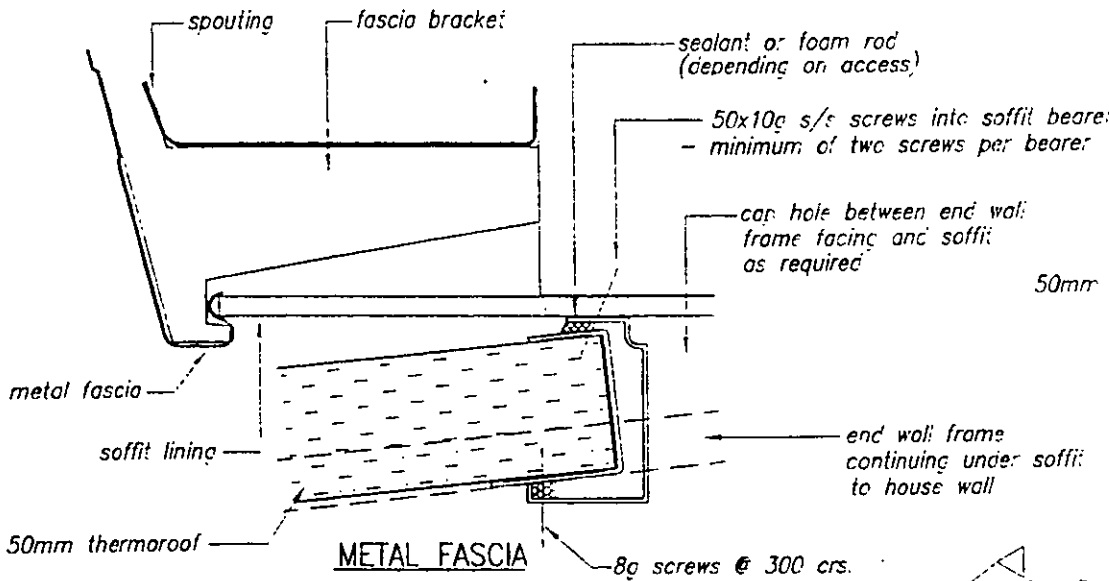

METAL FASCIA

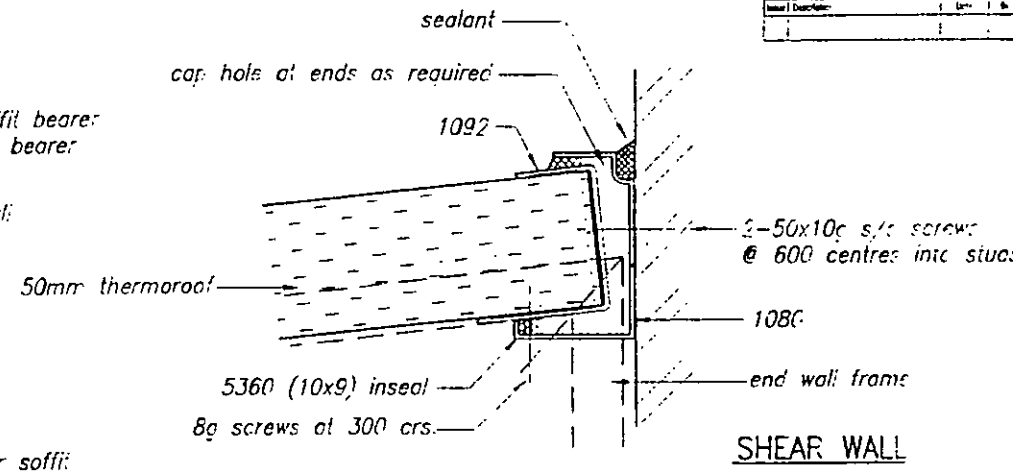

SHEAR WALL

IMPORTANT NOTE;
never fix conservatory roofs to metal fascia or soffit linings, always look for soffit bearers under linings

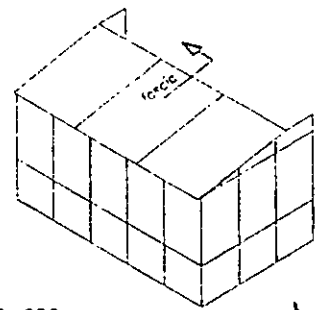

IMPORTANT NOTES

1. All Thermoroof sealants silaflex or neutral cure ONLY
2. Thermoroof comes in one colour only – "Titanic"
3. 1092/1095 must always cover exposed insulation so that panels cannot delaminate.

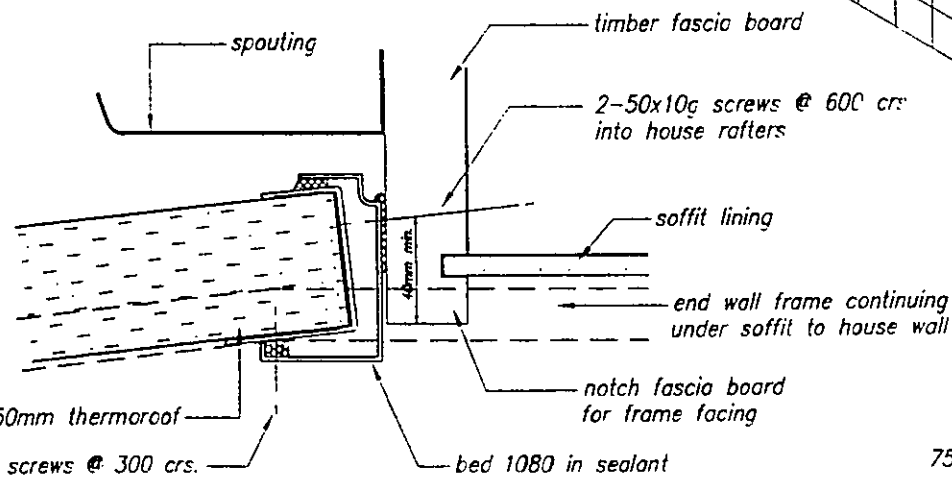

TIMBER FASCIA

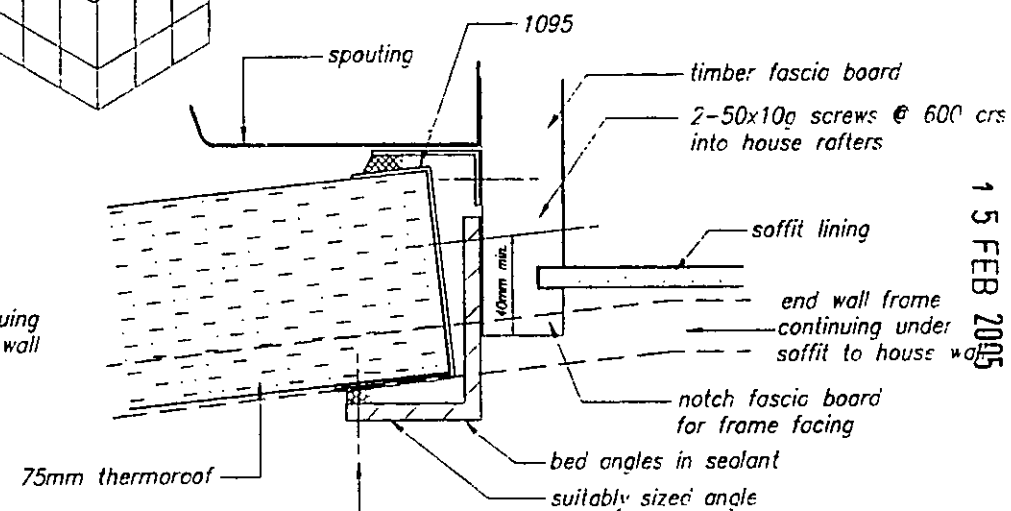

TIMBER FASCIA

NPDC Approved
15 FEB 2005

Manufacturing Details 1000 SERIES CONSEVATORY	PERIMETER FIXING-THERMAROOF TO HOUSE	Drawn by: Dennis Poci Date drawn: 14-07-98 Reference: 01-03-082 Scale: 1:2 Original: A3	Section / Sheet: 5 - 8

DATE QUOTED :08/07/04 QUOTE No: 2820 PAGE: 1

DATE MODIFIED:14/12/04

CLIENT CODE :CROWL

B.& C.CROWLEY
294 COURTNAY STREET
NEW PLYMOUTH

NPDC Approved
15 FEB 2005

Assembly Summary

Job Number: 1403

Items 1-9

Checked By .....

ZALBA JOB, BULTEEL STREET

ITEM		QUANTITY
1	SLIDING DOOR/CLEAR GLASS	1

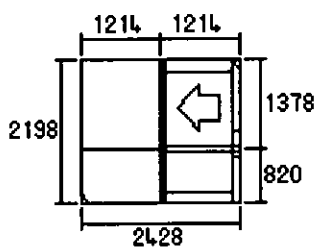

COLOUR:A1 SATIN 12
GLASS:05CLFL,06CLFL
FRAME:Sliding Door
FLASHING:No Flashing
LINER:PPRX140*19 LINER WIDTH: 0
TRIM : 2170 x 2400 GROOVED/NON GROOVED

2	UNIT SUPPLY ONLY	1
3	FRONT UNIT/CLEAR GLASS	1

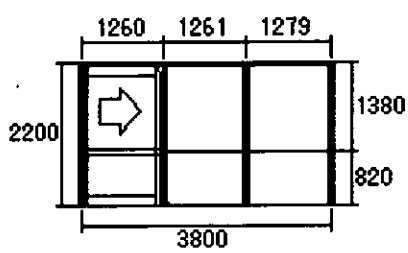

COLOUR:A1 SATIN 12
GLASS:05CLFL,06CLFL
FRAME:Consrv Slider
FLASHING:NO FLASHING
LINER:NONE *19 LINER WIDTH: 0
SIZE : 2200 x 3800 GROOVED/NON GROOVED

4	SIDE UNIT/CLEAR GLASS	1

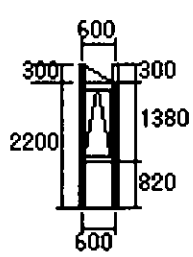

COLOUR:A1 SATIN 12
GLASS:05CLFL
FRAME:Consrv Windows
FLASHING:NO FLASHING
LINER:NONE *19 LINER WIDTH: 0
SIZE : 2500 x 600 GROOVED/NON GROOVED

5	PANEL ROOF 700 X 3800 MM	1
6	SUBJECT TO PERMIT	1

DATE QUOTED :08/07/04	QUOTE No: 2820	PAGE: 2
7	PERMIT	1
8	ON TO OWNERS EXISTING DECK	1
9	MATERIALS AND INSTALL	1

NPDC Approved
15 FEB 2005

ventilation solutions

for your home breathe

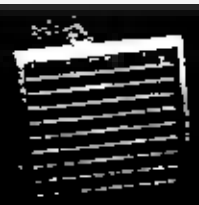

NEW Low Profile Series

Ventilation Systems Selection Guide

CHOOSING A FAN: a step by step guide

ns For Air Changes Per Hour

NPDC Approved
15 FEB 2005

1. Calculate the room volume in metres (L x W x H)
2. Multiply the room volume by the recommended air changes per hour for that room.
3. The sum is the total air changes required in cubic metres per hour.

Select a fan with the closest performance to this figure.

For Example:

What is the best fan for a bathroom that is 2.8m long by 2.8m wide with a ceiling height of 2.4m?

1. Calculate the volume of the bathroom: 2.8 x 2.8 x 2.4 = 18.8m³
2. 5-10 air changes per hour are recommended for a bathroom. So multiply the room volume by 10: 18.8m³ x 10 = 188m³/hr.
3. The fan to choose for this bathroom would be a fan that performs at greater than 188m³/hr. A fan that has a performance level of 313m³/hr (eg. XP150S, or WF150MP) would do this job.

10. ALUDUCT DUCT...fully flexible

Spiral wire reinforced laminate construction. Properties include: vapour-proof, fire resistant, aluminium inner/aluminium outer, non collapsing, non rotting, retains extended length, temp. range -30°C to 140°C, silver finish

100mm diameter x 3m DCT0328
120mm diameter x 3m DCT0329
150mm diameter x 3m DCT0330

Complies with all NZ Building Code fire rating requirements

11. PVC DUCT...fully flexible

Spiral wire reinforced PVC construction. Properties include: fire retardant, non collapsing, non rotting, vapour-proof, temp. range -6°C to 50°C, white finish

100mm diameter x 3m DCT0336
120mm diameter x 4m DCT0337
150mm diameter x 5m DCT0338

12. WALL/CEILING GRILLES

FIXED LOUVRE GRILLES
100mm white fixed louvre DCT0025
120mm white fixed louvre DCT0041
150mm white fixed louvre DCT0063

GRAVITY SHUTTER GRILLES
100mm white gravity shutter.... DCT0029
120mm white gravity shutter.... DCT0044
150mm white gravity shutter.... DCT0066

also available in grey and terracotta.

EGGCRATE

LOW PROFILE

EGGCRATE GRILLES
100mm white eggcrate..... DCT0375
120mm white eggcrate DCT0472
150mm white eggcrate DCT0473

LOW PROFILE GRILLES
100mm white low profile DCT1089
120mm white low profile DCT1090
150mm white low profile DCT1067

also available in gold and chrome

13. WEATHERPROOF COWLS

100mm diameter DCT0018
120mm diameter..... DCT1030
150mm diameter DCT1031

14. BACKDRAUGHT SHUTTERS

100mm diameter FAN0213
120mm diameter..... DCT0036
150mm diameter DCT0209

15. FAN TIMER

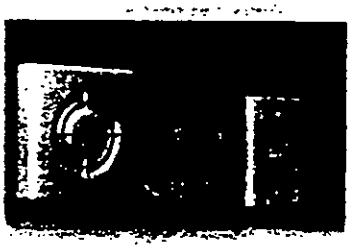

An accessory timer which can be fitted to most STANDARD fan models to keep the fan running for up to 7 minutes after you leave the room.
Easily fitted into the light switch flush box, or can be fitted at the fan.

TIME-AIR timer..... FAN0372

16. OTHER ACCESSORIES

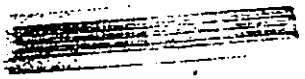

DOOR VENT
Fit to internal doors to allow make-up or replacement air into the room.

455mm x 90mm x 33mm (min) door thickness..... FAN0159

DUCT CONNECTORS

STRAIGHT DUCT CONNECTORS
100mm Plastic connector..... DCT0159
120mm Metal connector DCT0037
150mm Metal connector DCT0059
200mm Metal connector DCT0071

Y BRANCH CONNECTORS
100mm/100mm/100mm DCT0023
120mm/120mm/120mm DCT0038
150mm/150mm/150mm DCT0091

DUCT FASTENERS
Ducting strap 100mm diam .. FAN0274
Ducting strap 120mm diam .. FAN0281
Ducting strap 150mm diam .. FAN0282
Duct Tape 48mm x 5m DCT0173

NPDC Approved
15 FEB 2005

Securimax Limited
Distributors for **Manrose Manufacturing Limited** in New Zealand.

Securimax Limited also distribute:
Fiedland
Maxvent
Smartlite

Head Office: 5 Carmont Place, Mt Wellington,
PO Box 14-347, Panmure, Auckland, New Zealand
Tel: 09-259 1660, Fax: 09-259 1661
Email: sales@securimax.co.nz
Website: www.securimax.co.nz
Christchurch Branch: Unit 4 Elms Court, 142 Ferry Road
Tel: 03-365 0727, Fax: 03-365 0307

Dealers Stamp:

For further technical information telephone Auckland 09-259 1660
Securimax reserves the right to alter technical specifications without notice

PUB0076 SS.05 07/02

'HAT AFFECTS PERFORMANCE?

nple facts:

Fan size (i.e.diameter of impeller & outlet)

Ducts and the way they are installed

aller ducts = greater resistance to airflow

ght bends = greater resistance to airflow

e longer the duct and more bends = greater resistance to airflow Wrinkled

cting = greater resistance to airflow

noother, extended ducting = smooth, increased airflow

Type of fan

nether the fan is a centrifugal or axial flow fan:

VS

. Location of the fan

areful location of an extraction fan will ensure maximum air-flow through the om.. Air extracted from a bathroom, for example, can be replaced with dry r drawn from an adjacent bedroom or hallway, in turn drawn from an open ndow or door. This ensures that fresh air is being drawn into the entire ouse at regular periods.

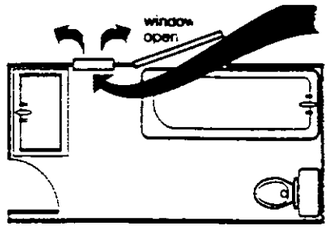

POOR CIRCULATION

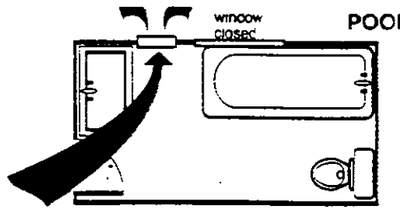

MEDIUM CIRCULATION

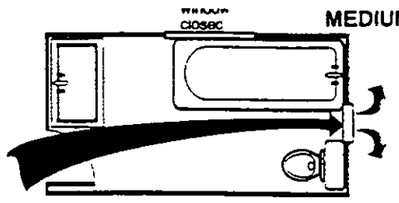

BEST CIRCULATION

ote:

door vent may be used to supplement make-up airflow

rder Code: FAN0159

NPDC Approved
15 FEB 2005

FAN SELECTION CHART

How to Use the Fan Selection Chart

1. Find your most suitable 'Application' on the left hand column (eg. Thru Wall).
2. Choose the 'Recommended Usages' for the room you wish to ventilate (eg. Bathroom., decide whether small., medium or large).
3. Follow that line across to identify the suggested fan 'Order Code'. Then 'Refer to Section' column indicates where you will find further product information eg. 'Thru Wall' - 'Small Bathroom' - 'FAN0080' - 'Section 2'

**check 'Important Notes' and 'Switching Options' for specific consideration.

Recommendation Regarding Bathroom Size:
Small bathroom: Up to 4 square metres floor area (eg. 2 metres x 2 metres), Medium bathroom: Up to 8 square metres floor area. Large bathroom: Above 8 square metres floor area

Application	Recommended Usages ( ) Bathroom	W/C	Laundry	Kitchen	Duct Size (mm)	Rec. Max. Duct Length	Manuf Model	Order Code	Refer to Section	Notes
Thru Wall 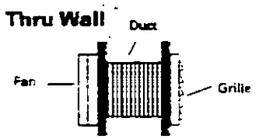		●	●		100	400mm *(supplied)*	XP100S	FAN0053	2	
	● (small)	●	●		120	400mm *(supplied)*	XP120S	FAN0080	2	
	● (medium/large)			●	150	400mm *(supplied)*	XP150S	FAN0135	2	
Window Fan		●	●		100	n/a	WF100P	FAN0021	5	
	● (any)			●	150	n/a	WF150MP	FAN0110	5	
In-Duct Fan Kits 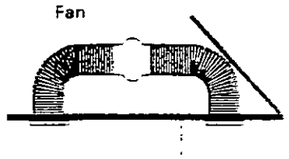		●	●		100	3 metres (supplied)	SF100S	FAN0017	3	
	● (small)	●	●		120	4 metres (supplied)	SF120S	FAN0064	3	
	● (small/medium)	●	●		100	12 metres (3m supplied)	SF200S	FAN0328	3	
	● (small/medium)	●	●		100	12 metres (3m supplied)	SHOWERLITE	FAN0420	3	
	● (small/medium)	●	●		100	12 metres (6m supplied)	PROSERIES 100	FAN0622	3	
	● (any)		●	●	150	5 metres (supplied)	SF150S	FAN0101	3	
	● (any)		●	●	150	5 metres (supplied)	SFLP150S	FAN0618	3	
	● (any)		●	●	150	12 metres (9m supplied)	PROSERIES 150	FAN0624	3	
Ceiling Mounted Fans 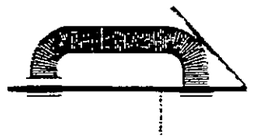 NB: Order Codes are FAN only	● (small)	●	●		120	4 metres	XF120S	FAN0073	1	
	● (any)	●	●		100	12 metres	FFCF234S	FAN0038	7	
	● (any)		●	●	150	5 metres	XF150S	FAN0120	1	
	● (any)		●	●	150	6 metres	XFLP150SS	FAN0594	1	
	● (any)		●	●	150	6 metres	XFLP150CS	FAN0609	1	
Heat/Fan/Light units 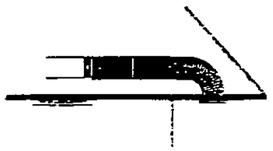	● (small, medium)				100	6 metres (3m supplied)	Heat 'n Vent 2	FAN0537	6	
	● (medium/large)				100	6 metres (3m supplied)	Heat 'n Vent 4	FAN0538	6	
	● (medium/large)				100	6 metres (3m supplied)	Light 'n Vent 1	FAN0539	6	
Thru Roof Exhaust Systems (Fan incorporated in the cowl) 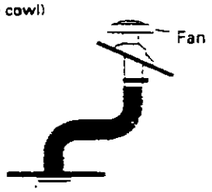	● (any)		●	●	150	12 metres	Smartvent - Hyper	DCT0189	8	
	● (any)		●	●	150	12 metres	Smartvent - Ultra	FAN0535	8	

NPDC Approved
15 FEB 2005

16 mm 35 mm

BUILDING FILE

Code No. 75/3

Subject FLATS

No. Sheets lots

Permit No R2296

Date 18.10.71

Document Set ID: 419990
Version: 1, Version Date: 07/08/2005

75-3

Street No. 3 Butler St. Lot ..... D.P. ..... Sec. Pts 157, 788 T of NP.

Nature of Work 8 Flats

Zone Residential

BUILDING PLAN REGISTER

Owner Brown Land Development Date 18.10.71

Address PO Box 444 N.P. File No. 10/25/71

Builder Henry Byrne & Co. Ltd Receipt No. 2296

Address 41 Kitchener St. Auckland Special requirements

Value 26,866.00

Area of buildings ..... Sq.ft.

Area of outbldgs ..... " "

Area of new work ..... " "

Remarks & inspections 1.11.71 Not Started 8.11.71 Not Started 15.11.71 Not started "For Sale" notices on site. 8.12.71 Nothing done. 28.1.72 footings & steel 8.2.72 further footings & steel 30.4.72 flats almost finished - Ret wall being built on side body to 6' high - one complete on front. Body to 6' high. completed

NEW PLYMOUTH CITY COUNCIL
CITY ENGINEERS DEPARTMENT

75-3

ESTIMATE FOR WATER CONNECTION

№ 150

Name of Project 3 Flats for Brown Lands Development Date 11.10.71

Plan No.

Address 3 Bellett St New Plymouth. Lot No. 1 D.P. New

Purpose of Supply: Domestic & Trade ✓ Type of Building 3 Flats (Dwelling, Flats, Offices, Factory, etc.)

Fire ✗

New Subdivision ✗

Distance, Building to Main 110' Altitude of Building 135' (City Datum)

Size of Connection ~~requested~~ recommended. 3/4" ϕ ESTIMATED COST $50

REMARKS

Recommend 1/2" ϕ off 3/4" ϕ to each flat and that each unit have its own isolating valve.

This estimate is NOT a quotation and is subject to amendment when final plans are submitted.

for City Engineer

Masterprint 21293

Document Set ID: 419990
Version: 1, Version Date: 07/08/2005

P.W. 19A (Rev. 11/68)

78-3

IN REPLY PLEASE QUOTE
No. 71/152

Telephone 46 080
Telegraphic Address:
"COSTWORKS"

MINISTRY OF WORKS
HEAD OFFICE
BUILDING PROJECTS AUTHORITY

P.O. Box 12-041,
Wellington, N.Z.

20 October 1971

TO Brown Lands Development Ltd.,
P.O. Box 400,
NEW PLYMOUTH.

CERTIFICATE OF REGISTRATION OF PROPOSED PRIVATE BUILDING PROJECT

1. In accordance with the provisions of the Economic Stabilisation (Building Registration and Construction) Regulations 1970 and Amendment No.1, the following construction work, according to details supplied by you has been registered:

(a) Name of owner and address: As above

(b) Type of construction work (e.g. factory, office, etc): 5 Apartments

(c) Location of the work: 5 Bulteel St., New Plymouth

(d) Name of local authority in whose district the work will be carried out: New Plymouth City Council

(e) Estimated cost of the work: $23,000.00

(f) Estimated date of commencement of the work: November 1971

(g) Estimated date of completion of the work: March 1972

2. This Certificate of Registration must be attached to your application to the local authority for the issue of the building permit.

3. This Certificate is valid for three months after the date specified in (f) above. If construction work is abandoned or a permit is not uplifted within three months, registration shall lapse.

4. The local authority will complete, detach, and return the following information to me after the building permit has been issued.

R.F. Paris
Building Projects Authority

Document Set ID: 419990
Version: 1, Version Date: 07/08/2005

75-3

NEW PLYMOUTH CITY COUNCIL

FOR OFFICE USE: File No. 10 25 Check Sheet No. 3573
Receipt No. 2296 Sewer Sheet No. 87
Date of Receipt 8/10/71 Zone Residential

To the City Engineer Date 8-10-71

APPLICATION FOR BUILDING PERMIT and/or services Lot No. 1

At (House No.) 3 Bulteel St D.P. New D.P.

For erection of 3 Flats Sec. No. PO 787 & 788 T. of N.P.

OWNER Brown Lands Developments ADDRESS Box 400 New Plymouth

Proposed use Residential

Foundation Concrete Walls Block veneer & W.B. Roof Metal Tiles

AREA of existing buildings - - - ..... sq. ft.

AREA of existing accessory buildings - ..... sq. ft.

AREA of building in application - - 2,200 sq. ft.

ESTIMATED FINISHED VALUE			FEES
Building (including roofing, downpipes, flashings, etc.)		$ 20 066 . 00	$ 64 . 00
Sanitary plumbing and drainage		$ 2934 . 00	$ 18 . 00
STORMWATER CONNECTION:	Distance from left boundary	23 000 00	
	Depth and size of service		$
SEWER CONNECTION:	Distance from left boundary		
	Depth and size of service		$ 36 . 00
WATER CONNECTION:	Distance from left boundary	To be charged	
	Depth and size of service		$
WATER (Building)			$ 1 . 00
VEHICLE CROSSING: When required		Existing	
Distance from left boundary			
Type of footpath			$
Type of crossing			$
Removal of existing crossing			$
DEPOSIT FOR DAMAGE TO FOOTPATH			$ 100 . 00
HOARDINGS ..... months			$
INSPECTION of second-hand building or materials			$
BUILDING RESEARCH LEVY			$ 11 . 50
			$ 230 . 50

BUILDER Henry Brown & Co Ltd 41 Kelly St Inglewood

Starting date Nov. 1971 Finishing date March 1972

NAME AND ADDRESS OF APPLICANT Brown Lands Development Ltd

PO Box 400 New Plymouth Phone 5642

Signature of Applicant C E O'Regan

SANITARY PLUMBING AND DRAINAGE APPLICATION

To be advised

Signature of Registered Plumber A.T. Burt Ltd.

Signature of Registered Drainlayer Ditto.

ESTIMATED FINISHED VALUE OF WORK

PLUMBING - -	$ 2,266 .
DRAINAGE - -	$ 668 .
	$ 2934 .

Document Set ID: 419990
Version: 1, Version Date: 07/08/2005

75-3 7

SPECIFICATION.

10 25

FIVE FLATS FOR
HENRY BROWN & CO. LTD.,
at
CORNER OF ROBE & BULTEEL STS.,
NEW PLYMOUTH.

BOWERING THOMSON BOON & ASSOCIATES,
Architects & Consulting Engineers,
Brougham Street,
New Plymouth.

JOB NO. 502. DECEMBER 1970.

GENERAL CONDITIONS. Structural and construction work shall as a minimum comply with NZSS 1900.

The whole of the work to be carried out shall comply with the requirements of the Local authority, and Lending Authority if applicable.

At completion the premises are to be left ready for occupation.

INSURANCE. The Contractor shall insure the works against fire and shall effect and maintain a Public Risk Insurance Policy.

PERMITS. Take out all necessary building permits and licences and pay all fees required, and conform in all respects to the requirements of the New Plymouth City Council.

EXCAVATIONS. Excavate to solid bottom for all foundations, piles, sewer drains etc. at least 1'6" below original ground levels. Trenches shall be true and even.

FILLING. To be thoroughly consolidated hardfill.

SITE CLEARANCE. Clear vegetation from site. Remove timber waste from under building.

CONCRETE. All concrete shall be composed of 6 parts clean shingle to 1 part Portland cement, thoroughly mixed by machine, or supplied from a central mixing plant. Minimum crushing strength shall be 2500 lbs. at 28 days.

PILES. Piles shall be 6" x 6" precast concrete with wires embedded. Piles shall project at least 12" above ground and be set in 12" x 12" x 6" concrete pads. They shall be spaced 4'6" crs. in rows up to 6'6" apart.

FOOTINGS AND FOUNDATION WALLS. All concrete footings and foundation walls shall be constructed as detailed. Typical section are shown, but each section of footing and wall shall conform to the general principles set out. Reinforcing steel shall be accurately formed and located, with adequate cover and held in position temporarily whilst concrete is being placed.

Concrete shall be placed in lifts not exceeding 4'0" unless chutes are used to avoid segregation of aggregate.

Formwork and placing methods shall produce 'fairface' concrete where exposed externally.

DRIVES. Vehicle access drives to Garages shall be tar-sealed, with 5" graded metal, 2 coats hot bitumen and chips. Kerbs shall be of high salt retention tanalised pine, 4" x 1½".

FLOOR AND PATHS. To Garages lay 3" thickness concrete reinforced with 665 RRC mesh and finished with steel or power float. Paths shall be 2½" thickness, with lightly 'broomed' finish where on gradient. Divide slabs and paths into lengths not exceeding 12 feet.

Document Set ID: 419990
Version: 1, Version Date: 07/08/2005

UNDERFLOOR VENTILATION. 16" x 8" pre-cast concrete vents as shown.

DAMP COURSE. Lay 2 ply malthoid damp course between concrete and timber.

CONCRETE BLOCK WALLS. Party walls shall be of 8" hollow concrete blocks, reinforced as shown on sections. Bond beams shall be used where horizontal steel occurs. Thoroughly fill all cavities where steel is located, with concrete having ½" max. size aggregate.

BLOCK VENEER.

Blocks. Firth's Summit Stone 'Colonial White' 16" x 4" x 4" blocks, with raked joints finished in natural mortar.

Ties. Galvanised ties fixedto faces of studs, to every fifth course not more than 3'0" apart and staggered. Not more than 6" from an opening.

Bonding. Build in brick bonding at intervals not exceeding 2'0" in height.

Lintels. 3½" x 3½" x 5/16" m.s. angles, galvanised bearing 9" into blockwork each side.

Vermin proof the cavities with 4" wide strips of fine galv. wire at bottom plate level.

Sills. 6" x 6" quarry tiles.

DRAINLAYER.

Soildrains: 4" first quality glazed earthenware, rubber ring jointed with all necessary fittings to complete drains in accordance with local body requirements.

Connect to City Council sewer where directed.

Stormwater. 4" unglazed field drains to soakholes 3'0" dia., 5'0" depth.

TIMBER. All timber to comply with NZSS No. 1900 or variations approved by the Lending Authority if applicable, but to be generally as follows:-

Sub floor timber. B.A.H. Rimu or No. 1 Dimension tanalised Pine.

Framing timbers: Boric treated Radiata Pine or boric treated B.A. Rimu.

Exterior finishing timbers: Weatherboard, fascias and trim, tanalith treated Rimu or Matai.
Vertical board ex 6" x 1" as above.

Interior Finishing Timbers. Shall be tanalised or Heart D.A. Rimu or Matai.

Flooring Timbers shall be tanalised or Heart D.A. Rimu or Matai, or may be pre-treated flooring grade particle board.

CONSTRUCTION.

BOTTOM PLATES & SLEEPERS. 4" x 2" & 4" x 3" respectively, wired or bolted to foundations and scarfed and halved.

WALL PLATES. 4" x 2" scarfed at joints and angles and to have 2 - ⅝" holes between each stud, with crossed galv. nails on top of bottom plate.

FLOOR JOISTS. 5" x 2" at 16" centres with piles and 4" x 3" bearers. 8" x 2" at 16" or 18" centres, with herringboning or solid dwanging through centre of spans over basement garages.

FLOOR & ROOF BEAMS. 10" x 4" underjoists where shown, supported on 4" x 4" posts and fixing and finished as detailed to basement garages.

Document Set ID: 419990
Version: 1, Version Date: 07/08/2005

75-3

STUDS. 4" x 2" at not more than 1'6" crs.
4" x 3" studs to openings.
4" x 4" (2/4" x 2") studs where noted and to openings over 9'0".

DWANGS. 3 rows to each wall, minimum size 3" x 2".

BRACES. 6" x 1" cut flush with framing.

LINTELS. According to NZSS 1900. To windows over 9'0" width - 2/10" x 2".

RAFTERS. 6" x 3" at 24" max. centres.

CEILING JOISTS. 4" x 2" at 20" crs.

RUNNERS. 4" x 2" if joists span over 8'0".
6" x 1" extra if joists span over 12'0".

RIDGES. 8" x 1".

CEILING STRAPPING. 3" x 1½" at 12" centres.

FASCIA BOARD. ex 10" x 1¼".

BARGE BOARDS. ex 10" x 1¼" mitred to eaves boards.

EAVES LINING. 3/16" flat 'Hardiflex' sheets.

EXTERNAL WALL SHEATHING.
a) Veneer. Stone veneer where shown.
b) Weatherboard. Where vertical weatherboard is shown, fix ¼" 'Hardiflex' to framing, then cover with ex 6" x 1" fine sawn boarding with gaps of ¾" between. Space evenly and use boarding as window trim. **horizontal weatherboard to be rusticated ex**
c) Fibrolite. Where shown, fix ¼" flat 'Hardiflex' (8" x 1" sheets, with Hardie nails punched, minimum joints evenly spaced.

BUILDING PAPER. Under all external wall sheathing, cover exterior face of studs with breather type building paper. Roof. Lay building paper over 2" wire netting.

INSULATION. To all exterior walls, line interior face of framing with double sided "Sisalation" or "Gib-foil". Lap ½" over studs. To all ceilings, line with double sided 'Sisalation', to underside of joists.

SKIRTING. 3" x ½" S.E.N. sanded and fitted neatly to floor.

ARCHITRAVES. 3" x ½". S.E.N. sanded and mitred.

CORNICE. ex 2" x 1" rebated at top edge.

WINDOW LININGS. ex 1"

PELMETS. To Flat 1, construct box pelmets over all Bedroom and Living windows.

INTERNAL LININGS.

Walls of Laundries, W.C., Bathroom, Kitchen - 3/16" hardboard.

Walls round bath and vanity unit up to 4'0" height - 3/16" lamiwall.

All other internal linings - Gibraltar board.

CEILINGS. Living Rooms, Kitchens and Bedrooms - Pinex panels.
All other ceilings - Pinex sheets.

JOINERY.

External doors. To have 1½" rebated jambs with weathered sill. Hang on 3 galv. butts. Main entrance doors 6'6" x 2'10", paint quality. Build frames with glazed sidelights to main entrance.

Document Set ID: 419990
Version: 1, Version Date: 07/08/2005

1875-3

ADDENDUM.

FLATS: 2. $423.50

&

3. $423.50

N.B. P.C. Sums for Kitchen, Bathroom, and Laundry Units, includes Vanity and Sink Tops in Formica, Tub Cupboards, and a minimum of three drawers to each Kitchen Set, and standard Shavings Cabinets with mirror doors.

Document Set ID: 419990
Version: 1, Version Date: 07/08/2005

BUILDING CONSENT

73242A

PROPERTY ID 015555

73242A

NEW PLYMOUTH DISTRICT COUNCIL
newplymouthnz.com

Code Compliance Certificate: 20699
Section 95, Building Act 2004

Issued:23Aug05

The Building

Street Address of building: Flat 2/3 BULTEEL STREET, NEW PLYMOUTH 4601
Legal Description of land where building is located:
FLAT 4 DP 10636
Current, lawfully established use:
Year first constructed:

The Owner

Name of owner: MS Mary Elizabeth ZALBA
Mailing Address: Flat 2/3 BULTEEL STREET
NEW PLYMOUTH 4601

Street address/registered office: Flat 2/3 BULTEEL STREET
NEW PLYMOUTH 4601

Phone number: (Bus.)
(Pvt.)

Facsimile number:
Email address:
Website:

First point of contact for communications with council/building consent authority:

New Plymouth District Council
Private Bag 2025
NEW PLYMOUTH
Ph: 06 7596060
Fax: 06 7596072
Email: enquiries@npdc.govt.nz

Building Work

Building Consent number: 73242
Issued by: New Plymouth District Council

Code Compliance

The building consent authority named below is satisfied, on reasonable grounds, that -

(a) the building work complies with the building consent.

Council Charges

The Council's total charges payable on the uplifting of this code compliance certificate in accordance with the attached details are: $0.00

This is a final code compliance certificate issued in respect of all of the building work under the above building consent

1: CODE COMPLIANCE CERTIFICATE

Signature

Team Leader Building Inspectorate

Position

On behalf of: New Plymouth District Council

Date: 23 Aug 2005

Building Consent No:73242
Section 51, Building Act 2004

Issued:26Jul05

The Building

Street Address of building: Flat 2/3 BULTEEL STREET, NEW PLYMOUTH 4601
Legal Description of land where building is located:
FLAT 4 DP 10636
Building Name: dwelling

The Owner

Name of owner: MS Mary Elizabeth ZALBA
Mailing Address: Flat 2/3 BULTEEL STREET
NEW PLYMOUTH 4601

Street address/registered office: Flat 2/3 BULTEEL STREET
NEW PLYMOUTH 4601

Phone number: (Bus.)
(Pvt.)
Facsimile number:
Email address:
Website:

First point of contact for communications with council/building consent authority:

New Plymouth District Council
Private Bag 2025
NEW PLYMOUTH
Ph: 06 7596060
Fax: 06 7596072
Email: enquiries@npdc.govt.nz

Building Work

The following building work is authorised by this consent:
Project: Additions
Intended Use: residential heating

This building consent is issued under section 51 of the Building Act 2004. This building consent does not relieve the owner of the building (or proposed building) of any duty or responsibility under any other Act relating to or affecting the building (or proposed building).

This building consent also does not permit the construction, alteration, demolition, or removal of the building (or proposed building) if that construction, alteration, demolition, or removal would be in breach of any other Act.

This building consent is subject to the following conditions:

1: .

There are no further conditions relating to this Building Consent.

2: **ADDITIONAL COMMENTS**

No additional comments relate to this Building Consent.

3: **DURABILITY OF BUILDING ELEMENTS**

Building elements may have an intended life of less than 50 years. Limited life building elements carry certain limitations and obligations. Based on current legislation these obligations require the building owner to follow the normal and/or scheduled maintenance of the building element to ensure its continued compliance with the New Zealand Building Code (NZBC). Where failure to properly maintain the building elements results in non-compliance with the NZBC, the Territorial Authority may issued a "Notice to Fix" which if not met could result in legal action appropriate in the circumstances.

4: **CONSTRUCTION & DEMOLITION NOISE**

The proposed New Plymouth District Plan, appendix 12, clause 1.1 - 1.4 sets construction and demolition work noise standards. A copy of this can be obtained from the New Plymouth District Council. Anyone carrying out building work must ensure they comply with these noise levels at all times.

5: **LAPSE & CANCELLATION OF CONSENTS**

A Building Consent lapses and is of no effect if the building work to which it relates does not commence within 12 months after the date of issue of the building consent or any further period that the Building Consent Authority may allow. (Time extensions to commence building work after 12 months must be submitted to the Building Consent Authority in writing stating the reason for the request, prior to the lapse date of the consent.

6: **COMPLETION OF BUILDING PROJECT**

A Code Compliance Certificate must be applied for as soon as practicable after the building work is completed. A building consent is valid for two years after the date on which the building consent was granted.
An extension of time may be considered if required, application for this time extension must be made in writing explaining reasons for the request prior to the consent lapsing.

Compliance Schedule

A compliance schedule is not required for the building.

Signature

Building Officer

Position

On behalf of: New Plymouth District Council

Date: 26 Jul 2005

NPDC OFFICE COPY
This Building Consent is approved under the Building Act and is limited to new work only as shown on these plans and related specifications
Approved..... Date 25-7-05

NPDC Approved
26 JUL 2005

73241/73242 22/7/05

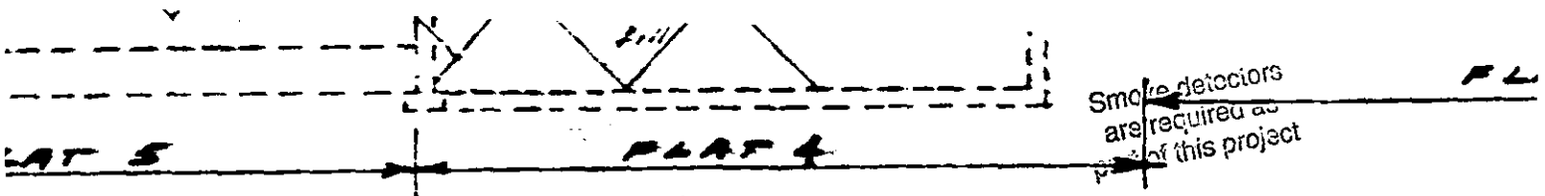

Smoke detectors are required as part of this project

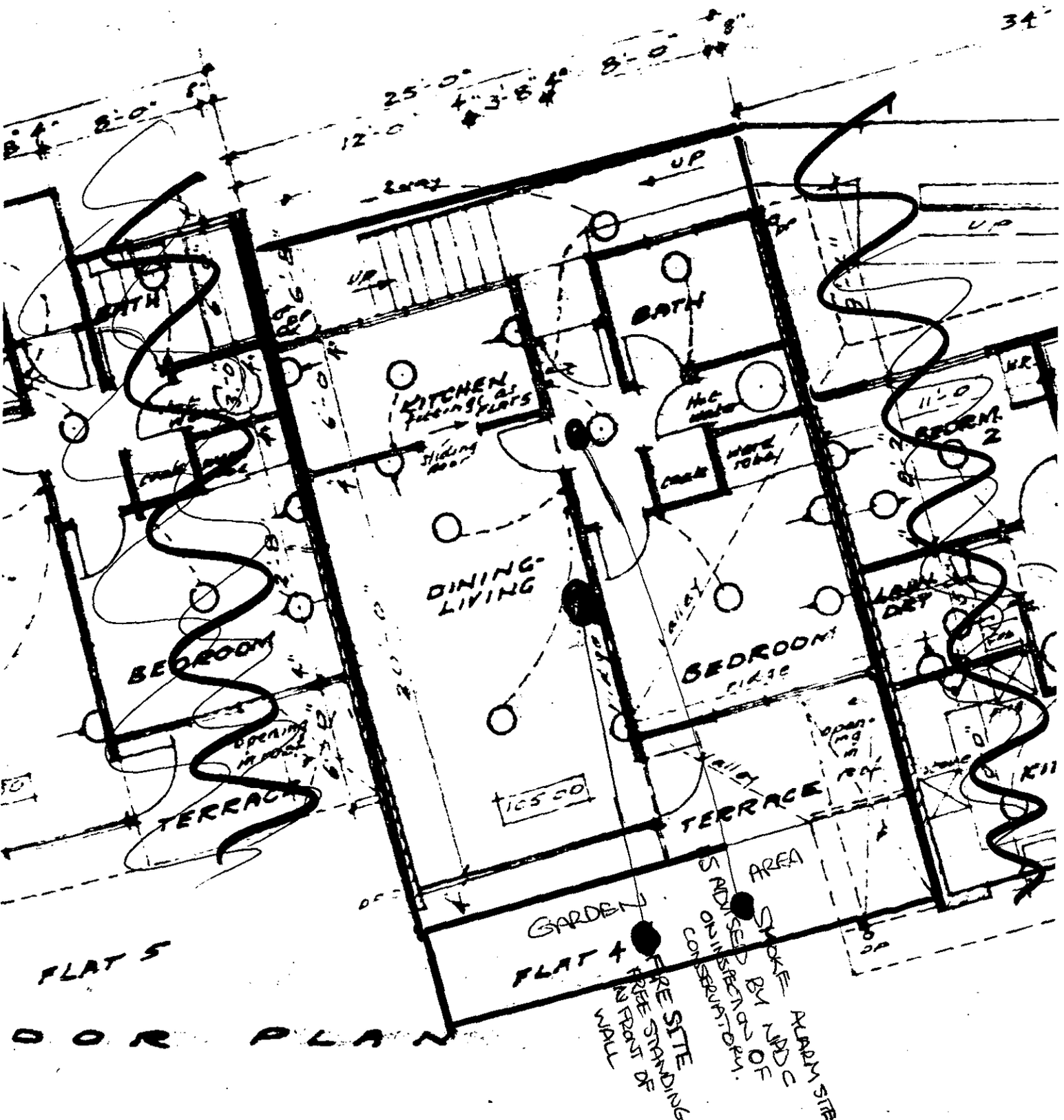

THE

Masport®

ARCADIA
MULTI-FUEL HEATER

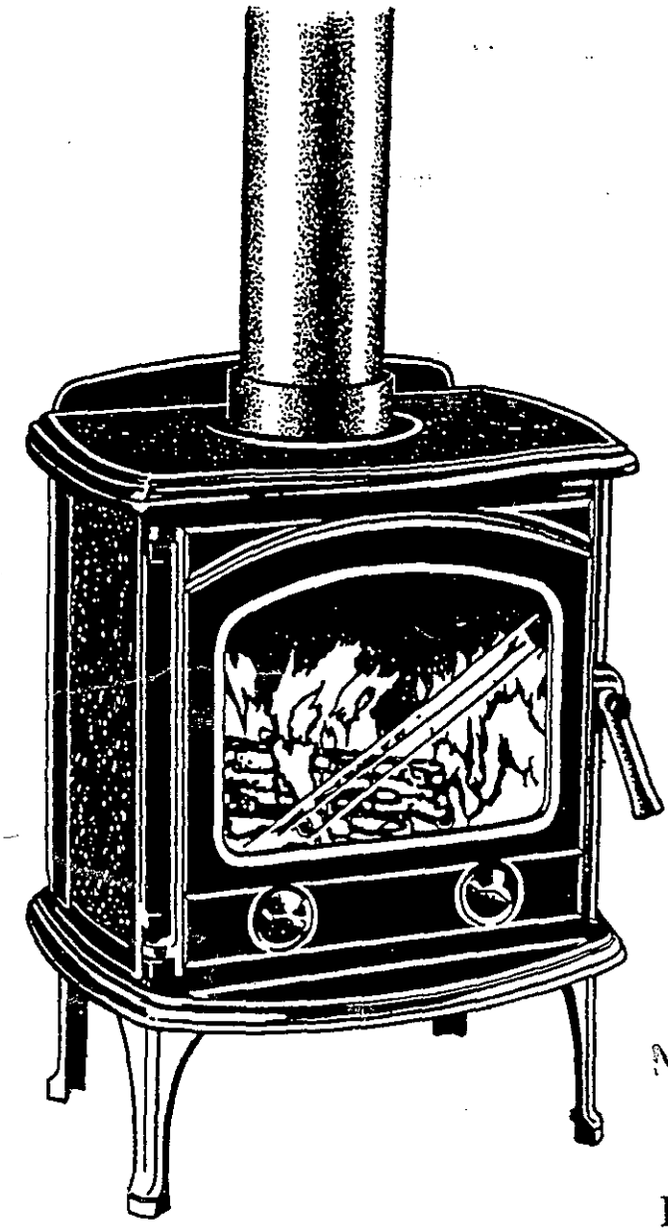

NPDC Approved
26 JUL 2005

INSTALLING AND
OPERATING
INSTRUCTIONS

984930

POSITIONING YOUR HEATER

The heater must not be installed under a heat sensitive ceiling of less than normal height (approx. 2.4 metres). No wall or other immovable object may be closer to the front of the heater than one metre. The heater may be installed in front of, or partially into a fireplace which has a suitable heat resistant surround, but any heat sensitive material (such as a mantel-piece) which protrudes from the face of the fireplace surround will need to be completely shielded. This shielding is best provided by a sheet metal panel held 12mm from the face to be protected on heat resistant spacers. The inner edge of the shield must abut the face of the fireplace surround and the outer edge and ends must have an unobstructed 10mm gap to allow cooling air circulation. Floor protection, to the extent shown below, must be provided either by the existing hearth or by an extension to it. Any extension must be securely fixed and must fit snugly against the hearth so that there is no gap which might allow a small ember to reach the floor beneath. (See INSTALLING THE FLUE for the flue requirements for a fireplace installation)

Finalise the installation position for your woodfire only after considering the necessary heater-to-wall distances (see below) and checking the practicability of installing the flue system through the ceiling and roof or wall. As a guide, the flue shielding and the 25mm clearance gap around it in the ceiling space will occupy a diameter of approximately 300mm, and this must be available without the removal of structural beams.

If a 'through-the-wall' flue system is contemplated, consult AS 2918 or NZS 7421 for the appropriate wall constructional requirements and verify that these will be feasible for your existing wall structure.

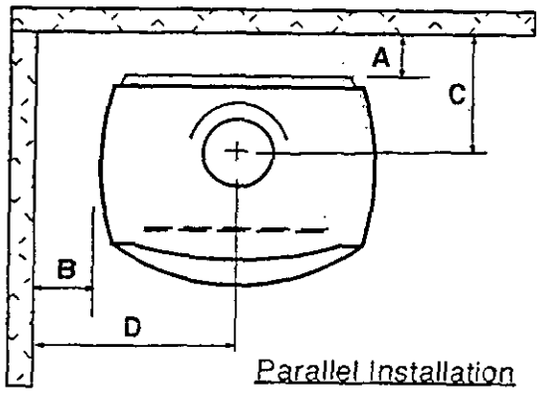

Parallel Installation

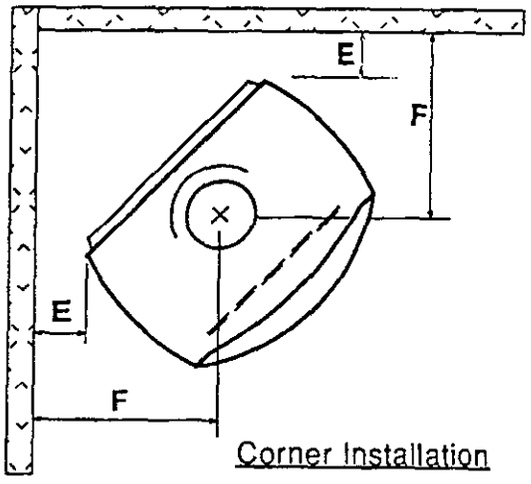

Corner Installation

MINIMUM DISTANCES (mm) TO HEAT SENSITIVE WALLS WHEN THE REAR SHIELD AND A FLUE HEAT SHIELD ARE FITTED

	A	B	C	D	E	F
Australia						
New Zealand	300	512	450	775	350	600

RECOMMENDED FLUE OPTIONS FOR AUSTRALIA:-

NEPOV Approved
26 JUL 2005

HEARTH REQUIREMENTS

Unless your heater will be standing on an un-covered fireproof floor which extends at least as far as the minimum hearth areas shown below, it will be necessary to provide a hearth for floor protection. See page 7 for construction details.

Having decided exactly where your heater will be installed, you will be able to establish the size of hearth you will need. Where the minimum requirements bring the edge of the hearth nearly to a wall, it is better to extend the hearth to meet the wall. In fact it is sensible to increase all dimensions by moving up to the next available standard hearth size so that precise positioning of the heater on the hearth will not be needed.

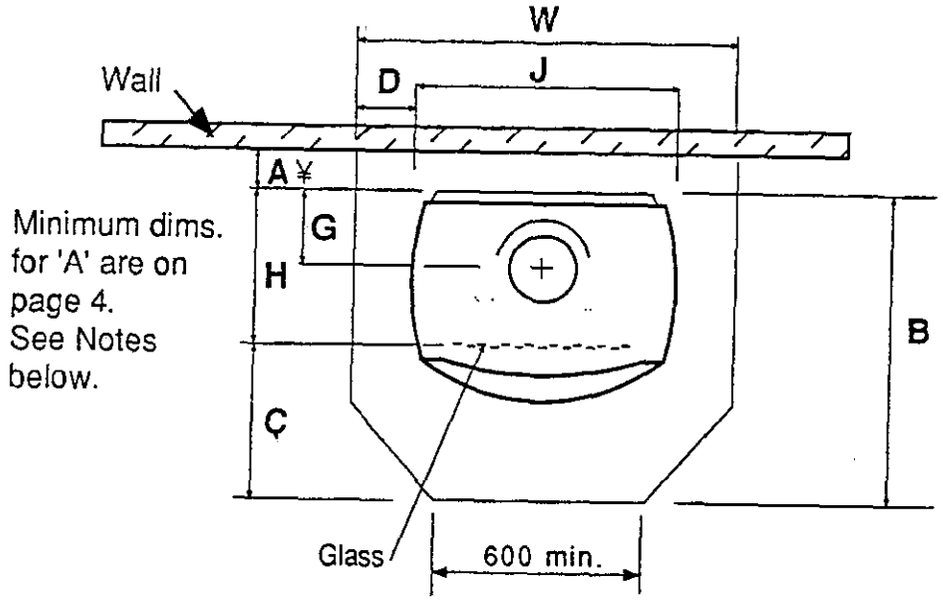

MINIMUM HEARTH EXTENSIONS (mm) WHEN THE REAR HEAT SHIELD IS FITTED

	W	B	C	D	G	H	J
Australia					150	320	525
New Zealand (flush hearth)	1075	745	425	275	150	320	525
New Zealand (hearth 50mm high)	975	665	345	225	150	320	525

¥ Note. In New Zealand the hearth must extend back at least 325mm from the rear heat shield or as far as the back wall if the wall is closer than 325mm. The minimum rear wall distance is 300mm (dimension A, page 4). If no rear heat shield is fitted, the hearth must extend back at least 600mm from the rear edge of the bottom casting.

In Australia, the hearth must extend back at least mm from the rear heat shield. It may be extended to meet the rear wall if desired. The minimum rear wall distance is mm (dimension A, page 4).

NPDC approved
26 JUL 2005

CORNER HEARTHS

While the information in the previous section details the MINIMUM size of hearth necessary to comply with the Safety Standards, it may be desirable to use a larger hearth for æsthetic considerations. A particular example is when the heater is installed diagonally in a corner. A neater appearance will result if the hearth is carried right into the corner and is shaped as shown below. The chart facilitates calculation of the MINIMUM dimensions required for hearths of this shape. The minimum allowable values for dimension 'E' are given in the tables on page 4.

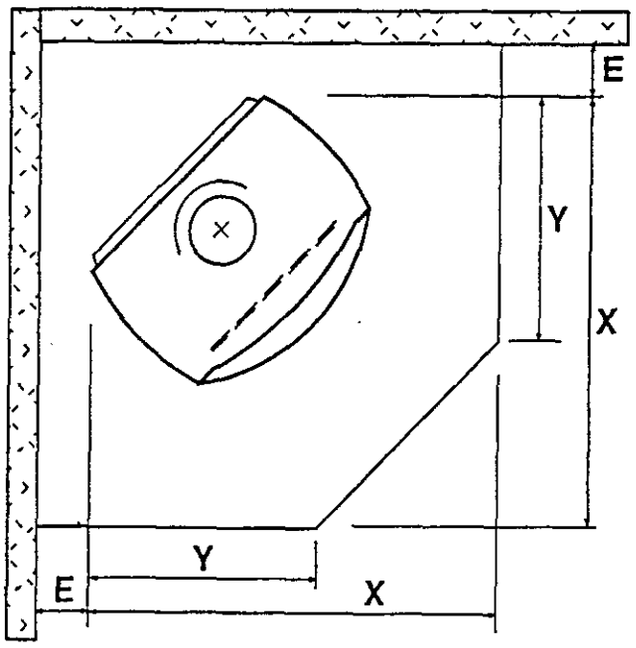

Special Corner Hearth Arrangement

MINIMUM DIMENSIONS
(Millimetres)

	X	Y
Australia		
New Zealand (flush hearth)	800	540
New Zealand (hearth 50mm high)	750	470

NOTE: YOUR SPECIFIC MEASUREMENT FOR 'E' MUST BE ADDED TO 'X' AND 'Y' TO FIND THE APPROPRIATE MINIMUM HEARTH DIMENSIONS.

SEE PAGE 4 FOR MINIMUM VALUES OF 'E'.

NBPC ... approved
26 JUL 2005

HEARTH CONSTRUCTION

In Australia the minimum hearth construction requirement is a 6mm fibre cement sheet. It is usually fastened directly to the floor.

In New Zealand, the hearth will need the insulating qualities provided by two layers of MICORE 160 (each 16mm thick), or one layer of WOODTEX (35mm thick). Both these materials give adequate protection for solid timber or particle board flooring. Constructions which are NOT suitable as insulating hearths are bricks and concrete when they are in contact with heat sensitive flooring material.

In all cases, in both countries, a durable top surface will be needed to resist damage from dropped embers. Obvious choices are slate, bricks and ceramic tiles. Gaps in the top surfacing material must be grouted to prevent embers from penetrating. A trim moulding will provide a neat edge finish.

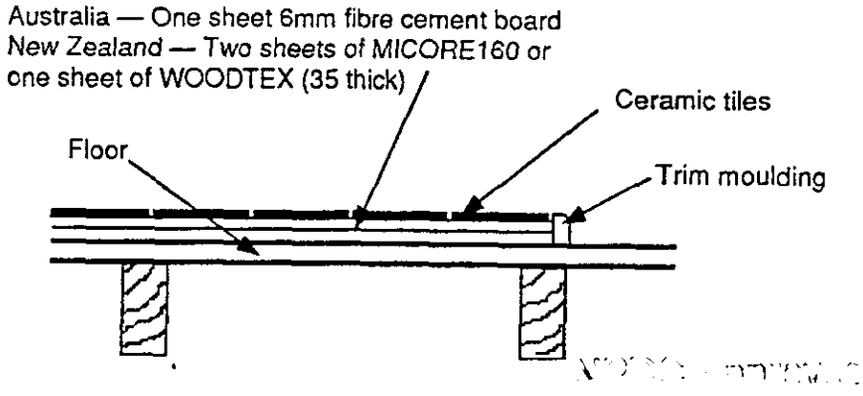

26 JUL 2005

INSTALLING THE FLUE

FREE-STANDING FLUES

You MUST use a flue system which is approved by MASPORT and which complies with AS 2918 - 1990 or NZS - 7421 1990 as appropriate. The flues and flue heat shields recommended in Australia are detailed in the table on page 4. In Australia, flue heat shielding must be fitted unless all heat sensitive material is at least 600mm away from the flue surface.

In New Zealand we recommend the use of genuine Masport flue kits. The flue MUST be installed in accordance with the detailed instructions accompanying it. A polished 150° stainless steel heat deflector, 1200mm long must be fitted at the back of the flue, directly above the stove.

Detailed dimensional requirements for the flue installation are included with every MASPORT approved flue system. The flue must be secured to the flue collar to prevent accidental separation.

Flue installations other than strictly vertical ones are possible. See AS 2918 or NZS 7421 for information on flues passing through walls and eaves.

FLUES IN CHIMNEYS

For a safe installation the following matters must be attended to.

- The fireplace and chimney must be thoroughly cleaned and checked for soundness.
- The chimney must not connect to a second fireplace.
- The joint between the chimney face and the fireplace surround must be checked and sealed to prevent leakage if necessary.
- Where the fireplace is in a heat sensitive wall it must have a non-metallic heat resistant surround extending at least 600mm each side of the recess centreline and up to at least 1000mm above the base of the fireplace recess.

• In New Zealand, the fireplace and chimney must comply with all the requirements of NZS 1900 Chapter 7 - 1985, except that the specified separation between the outside of the chimney and timber construction need not be complied with.

• A flue pipe must be fitted right up the chimney, and the space between the flue pipe and chimney must be ventilated at the top. In Australia the area of this vent must be not less than 10,000mm^2, while in New Zealand it is 13,000mm^2. The vent must be fitted with means to prevent significant ingress of water and debris.

• We recommend fitting a horizontal register plate at the lower end of the chimney to minimise room heat loss. The register plate should provide the same area of ventilation as at the top of the chimney.

• Provision must be made to support the weight of the flue and to permit the free expansion of the flue pipe when it heats up.

• The flue must be secured to the flue collar to prevent acidental separation.

MANTEL-SHELF SHIELDING

When the heater is installed in front of a fireplace, any heat sensitive material (such as a mantel-piece) which protrudes from the face of the fireplace surround will need to be completely shielded. This shielding is best provided by a sheet metal panel fastened 12mm from the face to be protected on heat resistant spacers. The inner edge of the shield must abut the face of the fireplace surround and the outer edge and ends must have an unobstructed 10mm gap to allow cooling air circulation.

FIXING THE HEATER IN POSITION

Once the flue system has been installed, the heater can be placed in position on the hearth. Confirm that the flue is correctly aligned and that the necessary minimum heater clearances are being achieved. In New Zealand, NZS 7421 requires that the heater and hearth be secured to prevent shifting in the event of an earthquake. This is best done by fastening to the floor through the holes provided in the feet, using at least two 12 gauge screws or the equivalent sizes of coach bolts or spring toggle fasteners.

NEW ZEALAND APPROVED
26 JUL 2005

16 mm 35 mm

BUILDING FILE

Code No. 75/3

Subject FLATS

No. Sheets lots

Permit No R2296

Date 18.10.71

Document Set ID: 419989
Version: 1, Version Date: 07/08/2005

75-3

Street No. 3 Butler St. Lot ..... D.P. ..... Sec. Pts 157, 788 T of NP.

Nature of Work 8 Flats

Zone Residential

BUILDING PLAN REGISTER

Owner Brown Land Development Date 18.10.71

Address P.O. Box 444 N.P. File No. 10/25/71

Builder Henry Byrne & Co. Ltd Receipt No. 2296

Address 41 Kitchener St. Auckland Special requirements

Value 26,866.00

Area of buildings ..... Sq.ft.

Area of outbldgs ..... " "

Area of new work ..... " "

Remarks & inspections 1.11.71 Not Started 8.11.71 Not Started 15.11.71 Not Started "For Sale" notices on site. 8.12.71 Nothing done. 28.1.72 footings & steel 8.2.72 further footings & steel 30.4.72 flats almost finished - Ret wall being built on side body to 6' high - one complete on front. Body to 6' high.

Complete

NEW PLYMOUTH CITY COUNCIL
CITY ENGINEERS DEPARTMENT

75-3

ESTIMATE FOR WATER CONNECTION

№ 150

Name of Project 3 Flats for Brown Lands Development Date 11.10.71

Plan No.

Address 3 Bellett St New Plymouth. Lot No. 1 D.P. New

Purpose of Supply: Domestic & Trade ✓ Type of Building 3 Flats (Dwelling, Flats, Offices, Factory, etc.)

Fire ✗

New Subdivision ✗

Distance, Building to Main 110' Altitude of Building 135' (City Datum)

Size of Connection ~~requested~~ recommended. 3/4" ϕ ESTIMATED COST $50

REMARKS

Recommend 1/2" ϕ off 3/4" ϕ to each flat and that each unit have its own isolating valve.

This estimate is NOT a quotation and is subject to amendment when final plans are submitted.

for City Engineer

Masterprint 21293

Document Set ID: 419989
Version: 1, Version Date: 07/08/2005

P.W. 19A (Rev. 11/68)

78-3

IN REPLY PLEASE QUOTE
No. 71/152

Telephone 46 080
Telegraphic Address:
"COSTWORKS"

MINISTRY OF WORKS
HEAD OFFICE
BUILDING PROJECTS AUTHORITY

P.O. Box 12-041,
Wellington, N.Z.

20 October 1971

TO Brown Lands Development Ltd.,
P.O. Box 400,
NEW PLYMOUTH.

CERTIFICATE OF REGISTRATION OF PROPOSED PRIVATE BUILDING PROJECT

1. In accordance with the provisions of the Economic Stabilisation (Building Registration and Construction) Regulations 1970 and Amendment No.1, the following construction work, according to details supplied by you has been registered:

(a) Name of owner and address: As above

(b) Type of construction work (e.g. factory, office, etc): 5 Apartments

(c) Location of the work: 5 Bulteel St., New Plymouth

(d) Name of local authority in whose district the work will be carried out: New Plymouth City Council

(e) Estimated cost of the work: $23,000.00

(f) Estimated date of commencement of the work: November 1971

(g) Estimated date of completion of the work: March 1972

2. This Certificate of Registration must be attached to your application to the local authority for the issue of the building permit.

3. This Certificate is valid for three months after the date specified in (f) above. If construction work is abandoned or a permit is not uplifted within three months, registration shall lapse.

4. The local authority will complete, detach, and return the following information to me after the building permit has been issued.

R.F. Paris
Building Projects Authority

Document Set ID: 419989
Version: 1, Version Date: 07/08/2005

75-3

NEW PLYMOUTH CITY COUNCIL

FOR OFFICE USE: File No. 10 25 Check Sheet No. 3573
Receipt No. 2296 Sewer Sheet No. 87
Date of Receipt 8/10/71 Zone Residential

To the City Engineer Date 8-10-71

APPLICATION FOR BUILDING PERMIT and/or services Lot No. 1

At (House No.) 3 Bulteel St D.P. New D.P.

For erection of 3 Flats Sec. No. PO 787 & 788 T. of N.P.

OWNER Brown Lands Developments ADDRESS Box 400 New Plymouth

Proposed use Residential

Foundation Concrete Walls Block veneer & W.B. Roof Metal Tiles

AREA of existing buildings - - - ..... sq. ft.

AREA of existing accessory buildings - ..... sq. ft.

AREA of building in application - - 2,200 sq. ft.

ESTIMATED FINISHED VALUE			FEES
Building (including roofing, downpipes, flashings, etc.)		$ 20 066 . 00	$ 64 . 00
Sanitary plumbing and drainage		$ 2934 . 00	$ 18 . 00
STORMWATER CONNECTION:	Distance from left boundary	23 000 00	
	Depth and size of service		$
SEWER CONNECTION:	Distance from left boundary		
	Depth and size of service		$ 36 . 00
WATER CONNECTION:	Distance from left boundary	To be charged	
	Depth and size of service		$
WATER (Building)			$ 1 . 00
VEHICLE CROSSING: When required		Existing	
Distance from left boundary			
Type of footpath			$
Type of crossing			$
Removal of existing crossing			$
DEPOSIT FOR DAMAGE TO FOOTPATH			$ 100 . 00
HOARDINGS ..... months			$
INSPECTION of second-hand building or materials			$
BUILDING RESEARCH LEVY			$ 11 . 50
			$ 230 . 50

BUILDER Henry Brown & Co Ltd 41 Kelly St Inglewood

Starting date Nov. 1971 Finishing date March 1972

NAME AND ADDRESS OF APPLICANT Brown Lands Development Ltd

PO Box 400 New Plymouth Phone 5642

Signature of Applicant C E O'Regan

SANITARY PLUMBING AND DRAINAGE APPLICATION

To be advised

Signature of Registered Plumber A.T. Burt Ltd.

Signature of Registered Drainlayer Ditto.

ESTIMATED FINISHED VALUE OF WORK

PLUMBING - -	$ 2,266 .
DRAINAGE - -	$ 668 .
	$ 2934 .

Document Set ID: 419989
Version: 1, Version Date: 07/08/2005

75-3 7

SPECIFICATION.

10 25

FIVE FLATS FOR
HENRY BROWN & CO. LTD.,
at
CORNER OF ROBE & BULTEEL STS.,
NEW PLYMOUTH.

BOWERING THOMSON BOON & ASSOCIATES,
Architects & Consulting Engineers,
Brougham Street,
New Plymouth.

JOB NO. 502. DECEMBER 1970.

GENERAL CONDITIONS. Structural and construction work shall as a minimum comply with NZSS 1900.

The whole of the work to be carried out shall comply with the requirements of the Local authority, and Lending Authority if applicable.

At completion the premises are to be left ready for occupation.

INSURANCE. The Contractor shall insure the works against fire and shall effect and maintain a Public Risk Insurance Policy.

PERMITS. Take out all necessary building permits and licences and pay all fees required, and conform in all respects to the requirements of the New Plymouth City Council.

EXCAVATIONS. Excavate to solid bottom for all foundations, piles, sewer drains etc. at least 1'6" below original ground levels. Trenches shall be true and even.

FILLING. To be thoroughly consolidated hardfill.

SITE CLEARANCE. Clear vegetation from site. Remove timber waste from under building.

CONCRETE. All concrete shall be composed of 6 parts clean shingle to 1 part Portland cement, thoroughly mixed by machine, or supplied from a central mixing plant. Minimum crushing strength shall be 2500 lbs. at 28 days.

PILES. Piles shall be 6" x 6" precast concrete with wires embedded. Piles shall project at least 12" above ground and be set in 12" x 12" x 6" concrete pads. They shall be spaced 4'6" crs. in rows up to 6'6" apart.

FOOTINGS AND FOUNDATION WALLS. All concrete footings and foundation walls shall be constructed as detailed. Typical section are shown, but each section of footing and wall shall conform to the general principles set out. Reinforcing steel shall be accurately formed and located, with adequate cover and held in position temporarily whilst concrete is being placed.

Concrete shall be placed in lifts not exceeding 4'0" unless chutes are used to avoid segregation of aggregate.

Formwork and placing methods shall produce 'fairface' concrete where exposed externally.

DRIVES. Vehicle access drives to Garages shall be tar-sealed, with 5" graded metal, 2 coats hot bitumen and chips. Kerbs shall be of high salt retention tanalised pine, 4" x 1½".

FLOOR AND PATHS. To Garages lay 3" thickness concrete reinforced with 665 RRC mesh and finished with steel or power float. Paths shall be 2½" thickness, with lightly 'broomed' finish where on gradient. Divide slabs and paths into lengths not exceeding 12 feet.

Document Set ID: 419989
Version: 1, Version Date: 07/08/2005

UNDERFLOOR VENTILATION. 16" x 8" pre-cast concrete vents as shown.

DAMP COURSE. Lay 2 ply malthoid damp course between concrete and timber.

CONCRETE BLOCK WALLS. Party walls shall be of 8" hollow concrete blocks, reinforced as shown on sections. Bond beams shall be used where horizontal steel occurs. Thoroughly fill all cavities where steel is located, with concrete having ½" max. size aggregate.

BLOCK VENEER.

Blocks. Firth's Summit Stone 'Colonial White' 16" x 4" x 4" blocks, with raked joints finished in natural mortar.

Ties. Galvanised ties fixedto faces of studs, to every fifth course not more than 3'0" apart and staggered. Not more than 6" from an opening.

Bonding. Build in brick bonding at intervals not exceeding 2'0" in height.

Lintels. 3½" x 3½" x 5/16" m.s. angles, galvanised bearing 9" into blockwork each side.

Vermin proof the cavities with 4" wide strips of fine galv. wire at bottom plate level.

Sills. 6" x 6" quarry tiles.

DRAINLAYER.

Soildrains: 4" first quality glazed earthenware, rubber ring jointed with all necessary fittings to complete drains in accordance with local body requirements.

Connect to City Council sewer where directed.

Stormwater. 4" unglazed field drains to soakholes 3'0" dia., 5'0" depth.

TIMBER. All timber to comply with NZSS No. 1900 or variations approved by the Lending Authority if applicable, but to be generally as follows:-

Sub floor timber. B.A.H. Rimu or No. 1 Dimension tanalised Pine.

Framing timbers: Boric treated Radiata Pine or boric treated B.A. Rimu.

Exterior finishing timbers: Weatherboard, fascias and trim, tanalith treated Rimu or Matai.
Vertical board ex 6" x 1" as above.

Interior Finishing Timbers. Shall be tanalised or Heart D.A. Rimu or Matai.

Flooring Timbers shall be tanalised or Heart D.A. Rimu or Matai, or may be pre-treated flooring grade particle board.

CONSTRUCTION.

BOTTOM PLATES & SLEEPERS. 4" x 2" & 4" x 3" respectively, wired or bolted to foundations and scarfed and halved.

WALL PLATES. 4" x 2" scarfed at joints and angles and to have 2 - ⅝" holes between each stud, with crossed galv. nails on top of bottom plate.

FLOOR JOISTS. 5" x 2" at 16" centres with piles and 4" x 3" bearers. 8" x 2" at 16" or 18" centres, with herringboning or solid dwanging through centre of spans over basement garages.

FLOOR & ROOF BEAMS. 10" x 4" underjoists where shown, supported on 4" x 4" posts and fixing and finished as detailed to basement garages.

Document Set ID: 419989
Version: 1, Version Date: 07/08/2005

75-3

STUDS. 4" x 2" at not more than 1'6" crs.
4" x 3" studs to openings.
4" x 4" (2/4" x 2") studs where noted and to openings over 9'0".

DWANGS. 3 rows to each wall, minimum size 3" x 2".

BRACES. 6" x 1" cut flush with framing.

LINTELS. According to NZSS 1900. To windows over 9'0" width - 2/10" x 2".

RAFTERS. 6" x 3" at 24" max. centres.

CEILING JOISTS. 4" x 2" at 20" crs.

RUNNERS. 4" x 2" if joists span over 8'0".
6" x 1" extra if joists span over 12'0".

RIDGES. 8" x 1".

CEILING STRAPPING. 3" x 1½" at 12" centres.

FASCIA BOARD. ex 10" x 1¼".

BARGE BOARDS. ex 10" x 1¼" mitred to eaves boards.

EAVES LINING. 3/16" flat 'Hardiflex' sheets.

EXTERNAL WALL SHEATHING.
a) Veneer. Stone veneer where shown.
b) Weatherboard. Where vertical weatherboard is shown, fix ¼" 'Hardiflex' to framing, then cover with ex 6" x 1" fine sawn boarding with gaps of ¾" between. Space evenly and use boarding as window trim. **horizontal weatherboard to be rusticated ex**
c) Fibrolite. Where shown, fix ¼" flat 'Hardiflex' (8" x 1" sheets, with Hardie nails punched, minimum joints evenly spaced.

BUILDING PAPER. Under all external wall sheathing, cover exterior face of studs with breather type building paper. Roof. Lay building paper over 2" wire netting.

INSULATION. To all exterior walls, line interior face of framing with double sided "Sisalation" or "Gib-foil". Lap ½" over studs. To all ceilings, line with double sided 'Sisalation', to underside of joists.

SKIRTING. 3" x ½" S.E.N. sanded and fitted neatly to floor.

ARCHITRAVES. 3" x ½". S.E.N. sanded and mitred.

CORNICE. ex 2" x 1" rebated at top edge.

WINDOW LININGS. ex 1"

PELMETS. To Flat 1, construct box pelmets over all Bedroom and Living windows.

INTERNAL LININGS.

Walls of Laundries, W.C., Bathroom, Kitchen - 3/16" hardboard.

Walls round bath and vanity unit up to 4'0" height - 3/16" lamiwall.

All other internal linings - Gibraltar board.

CEILINGS. Living Rooms, Kitchens and Bedrooms - Pinex panels.
All other ceilings - Pinex sheets.

JOINERY.

External doors. To have 1½" rebated jambs with weathered sill. Hang on 3 galv. butts. Main entrance doors 6'6" x 2'10", paint quality. Build frames with glazed sidelights to main entrance.

Document Set ID: 419989
Version: 1, Version Date: 07/08/2005

1875-3

ADDENDUM.

FLATS: 2. $423.50

&

3. $423.50

N.B. P.C. Sums for Kitchen, Bathroom, and Laundry Units, includes Vanity and Sink Tops in Formica, Tub Cupboards, and a minimum of three drawers to each Kitchen Set, and standard Shavings Cabinets with mirror doors.

Document Set ID: 419989
Version: 1, Version Date: 07/08/2005

Te Kaunihera-ā-Rohe o Ngāmotu
NEW PLYMOUTH DISTRICT COUNCIL
newplymouthnz.com

Registration of Exempt Building Work No: XMT13/110153

APPLICANT

Mary Elizabeth ZALBA
2 - 3 Bulteel Street
NEW PLYMOUTH 4310

Phone: 06 759 8030 Application received: 25/02/2013

PROJECT LOCATION

Street address: 2 - 3 Bulteel Street NEW PLYMOUTH 4310
Property ID: 15555 Legal: GRGE 4 DP 10636, FLAT 4 DP 10636, LOT 1 DP 104

---

1. This registration of exempt building & building work is a means of providing a report on file for future reference & property enquiries.

   Items considered by this registration include: **Re-roof single storey one bedroom flat**

   Building structures and building work recognised by NPDC that fall within the criteria set out in Schedule 1 of the Building Act 2004.

2. We confirm that the proposed work falls within the scope of Schedule 1 of the Building Act 2004.

   A building consent shall not be required in respect of this work however all building work must be carried out in accordance with the New Zealand Building Code.

3. **Compliance with the District Plan**
   This exemption is limited to the matters addressed under the Building Act 2004 only and does not exempt the work from compliance with the provisions of the Resource Management Act 1991 as detailed in the operative District Plan.

   It is recommended that you check the status of your intended work under the provisions of the District Plan. A copy of the District Plan is on the council's website (www.newplymouth.com) or from the council's Customer Support area at the Civic Centre. Alternatively, you may wish to refer the matter to your designer.

4. **Sign off**

Barry Read
Team Leader Building Consents

Date: 25 February 2013

TARANAKI like no other

16 mm 35 mm

BUILDING FILE

Code No. 75/3

Subject FLATS

No. Sheets lots

Permit No R2296

Date 18.10.71

Document Set ID: 419988
Version: 1, Version Date: 07/08/2005

75-3

Street No. 3 Butler St. Lot ..... D.P. ..... Sec. Pts 157, 788 T of NP.

Nature of Work 8 Flats

Zone Residential

BUILDING PLAN REGISTER

Owner Brown Land Development Date 18.10.71

Address P.O. Box 444 N.P. File No. 10/25/71

Builder Henry Byrne & Co. Ltd Receipt No. 2296

Address 41 Kitchener St. Auckland Special requirements

Value 26,866.00

Area of buildings ..... Sq.ft.

Area of cutbldgs ..... " "

Area of new work ..... " "

Remarks & inspections 1.11.71 Not Started 8.11.71 Not Started 15.11.71 Not started "For Sale" notices on site. 8.12.71 Nothing done. 28.1.72 footings & steel 8.2.72 further footings & steel 30.4.72 flats almost finished - Ret wall being built on side body to 6' high - one complete on front. Body to 6' high. completed

NEW PLYMOUTH CITY COUNCIL
CITY ENGINEERS DEPARTMENT

75-3

ESTIMATE FOR WATER CONNECTION

№ 150

Name of Project 3 Flats for Brown Lands Development Date 11.10.71

Plan No.

Address 3 Bellett St New Plymouth. Lot No. 1 D.P. New

Purpose of Supply: Domestic & Trade ✓ Type of Building 3 Flats (Dwelling, Flats, Offices, Factory, etc.)

Fire ✗

New Subdivision ✗

Distance, Building to Main 110' Altitude of Building 135' (City Datum)

Size of Connection ~~requested~~ recommended. 3/4" ϕ ESTIMATED COST $50

REMARKS

Recommend 1/2" ϕ off 3/4" ϕ to each flat and that each unit have its own isolating valve.

This estimate is NOT a quotation and is subject to amendment when final plans are submitted.

for City Engineer

Masterprint 21293

Document Set ID: 419988
Version: 1, Version Date: 07/08/2005

P.W. 19A (Rev. 11/68)

78-3

IN REPLY PLEASE QUOTE
No. 71/152

Telephone 46 080
Telegraphic Address:
"COSTWORKS"

MINISTRY OF WORKS
HEAD OFFICE
BUILDING PROJECTS AUTHORITY

P.O. Box 12-041,
Wellington, N.Z.

20 October 1971

TO Brown Lands Development Ltd.,
P.O. Box 400,
NEW PLYMOUTH.

CERTIFICATE OF REGISTRATION OF PROPOSED PRIVATE BUILDING PROJECT

1. In accordance with the provisions of the Economic Stabilisation (Building Registration and Construction) Regulations 1970 and Amendment No.1, the following construction work, according to details supplied by you has been registered:

(a) Name of owner and address: As above

(b) Type of construction work (e.g. factory, office, etc): 5 Apartments

(c) Location of the work: 5 Bulteel St., New Plymouth

(d) Name of local authority in whose district the work will be carried out: New Plymouth City Council

(e) Estimated cost of the work: $23,000.00

(f) Estimated date of commencement of the work: November 1971

(g) Estimated date of completion of the work: March 1972

2. This Certificate of Registration must be attached to your application to the local authority for the issue of the building permit.

3. This Certificate is valid for three months after the date specified in (f) above. If construction work is abandoned or a permit is not uplifted within three months, registration shall lapse.

4. The local authority will complete, detach, and return the following information to me after the building permit has been issued.

R.F. Paris
Building Projects Authority

Document Set ID: 419988
Version: 1, Version Date: 07/08/2005

75-3

NEW PLYMOUTH CITY COUNCIL

FOR OFFICE USE: File No. 10 25 Check Sheet No. 3573
Receipt No. 2296 Sewer Sheet No. 87
Date of Receipt 8/10/71 Zone Residential

To the City Engineer Date 8-10-71

APPLICATION FOR BUILDING PERMIT and/or services Lot No. 1

At (House No.) 3 Bulteel St D.P. New D.P.

For erection of 3 Flats Sec. No. PO 787 & 788 T. of N.P.

OWNER Brown Lands Developments ADDRESS Box 400 New Plymouth

Proposed use Residential

Foundation Concrete Walls Block veneer & W.B. Roof Metal Tiles

AREA of existing buildings - - - ..... sq. ft.

AREA of existing accessory buildings - ..... sq. ft.

AREA of building in application - - 2,200 sq. ft.

ESTIMATED FINISHED VALUE			FEES
Building (including roofing, downpipes, flashings, etc.)		$ 20 066 . 00	$ 64 . 00
Sanitary plumbing and drainage		$ 2934 . 00	$ 18 . 00
STORMWATER CONNECTION:	Distance from left boundary	23 000 00	
	Depth and size of service		$
SEWER CONNECTION:	Distance from left boundary		
	Depth and size of service		$ 36 . 00
WATER CONNECTION:	Distance from left boundary	To be charged	
	Depth and size of service		$
WATER (Building)			$ 1 . 00
VEHICLE CROSSING: When required		Existing	
Distance from left boundary			
Type of footpath			$
Type of crossing			$
Removal of existing crossing			$
DEPOSIT FOR DAMAGE TO FOOTPATH			$ 100 . 00
HOARDINGS ..... months			$
INSPECTION of second-hand building or materials			$
BUILDING RESEARCH LEVY			$ 11 . 50
			$ 230 . 50

BUILDER Henry Brown & Co Ltd 41 Kelly St Inglewood

Starting date Nov. 1971 Finishing date March 1972

NAME AND ADDRESS OF APPLICANT Brown Lands Development Ltd

PO Box 400 New Plymouth Phone 5642

Signature of Applicant C E O'Regan

SANITARY PLUMBING AND DRAINAGE APPLICATION

To be advised

Signature of Registered Plumber A.T. Burt Ltd.

Signature of Registered Drainlayer Ditto.

ESTIMATED FINISHED VALUE OF WORK

PLUMBING - -	$ 2,266 .
DRAINAGE - -	$ 668 .
	$ 2934 .

Document Set ID: 419988
Version: 1, Version Date: 07/08/2005

75-3 7

SPECIFICATION.

10 25

FIVE FLATS FOR
HENRY BROWN & CO. LTD.,
at
CORNER OF ROBE & BULTEEL STS.,
NEW PLYMOUTH.

BOWERING THOMSON BOON & ASSOCIATES,
Architects & Consulting Engineers,
Brougham Street,
New Plymouth.

JOB NO. 502. DECEMBER 1970.

GENERAL CONDITIONS. Structural and construction work shall as a minimum comply with NZSS 1900.

The whole of the work to be carried out shall comply with the requirements of the Local authority, and Lending Authority if applicable.

At completion the premises are to be left ready for occupation.

INSURANCE. The Contractor shall insure the works against fire and shall effect and maintain a Public Risk Insurance Policy.

PERMITS. Take out all necessary building permits and licences and pay all fees required, and conform in all respects to the requirements of the New Plymouth City Council.

EXCAVATIONS. Excavate to solid bottom for all foundations, piles, sewer drains etc. at least 1'6" below original ground levels. Trenches shall be true and even.

FILLING. To be thoroughly consolidated hardfill.

SITE CLEARANCE. Clear vegetation from site. Remove timber waste from under building.

CONCRETE. All concrete shall be composed of 6 parts clean shingle to 1 part Portland cement, thoroughly mixed by machine, or supplied from a central mixing plant. Minimum crushing strength shall be 2500 lbs. at 28 days.

PILES. Piles shall be 6" x 6" precast concrete with wires embedded. Piles shall project at least 12" above ground and be set in 12" x 12" x 6" concrete pads. They shall be spaced 4'6" crs. in rows up to 6'6" apart.

FOOTINGS AND FOUNDATION WALLS. All concrete footings and foundation walls shall be constructed as detailed. Typical section are shown, but each section of footing and wall shall conform to the general principles set out. Reinforcing steel shall be accurately formed and located, with adequate cover and held in position temporarily whilst concrete is being placed.

Concrete shall be placed in lifts not exceeding 4'0" unless chutes are used to avoid segregation of aggregate.

Formwork and placing methods shall produce 'fairface' concrete where exposed externally.

DRIVES. Vehicle access drives to Garages shall be tar-sealed, with 5" graded metal, 2 coats hot bitumen and chips. Kerbs shall be of high salt retention tanalised pine, 4" x 1½".

FLOOR AND PATHS. To Garages lay 3" thickness concrete reinforced with 665 RRC mesh and finished with steel or power float. Paths shall be 2½" thickness, with lightly 'broomed' finish where on gradient. Divide slabs and paths into lengths not exceeding 12 feet.

Document Set ID: 419988
Version: 1, Version Date: 07/08/2005

UNDERFLOOR VENTILATION. 16" x 8" pre-cast concrete vents as shown.

DAMP COURSE. Lay 2 ply malthoid damp course between concrete and timber.

CONCRETE BLOCK WALLS. Party walls shall be of 8" hollow concrete blocks, reinforced as shown on sections. Bond beams shall be used where horizontal steel occurs. Thoroughly fill all cavities where steel is located, with concrete having ½" max. size aggregate.

BLOCK VENEER.

Blocks. Firth's Summit Stone 'Colonial White' 16" x 4" x 4" blocks, with raked joints finished in natural mortar.

Ties. Galvanised ties fixedto faces of studs, to every fifth course not more than 3'0" apart and staggered. Not more than 6" from an opening.

Bonding. Build in brick bonding at intervals not exceeding 2'0" in height.

Lintels. 3½" x 3½" x 5/16" m.s. angles, galvanised bearing 9" into blockwork each side.

Vermin proof the cavities with 4" wide strips of fine galv. wire at bottom plate level.

Sills. 6" x 6" quarry tiles.

DRAINLAYER.

Soildrains: 4" first quality glazed earthenware, rubber ring jointed with all necessary fittings to complete drains in accordance with local body requirements.

Connect to City Council sewer where directed.

Stormwater. 4" unglazed field drains to soakholes 3'0" dia., 5'0" depth.

TIMBER. All timber to comply with NZSS No. 1900 or variations approved by the Lending Authority if applicable, but to be generally as follows:-

Sub floor timber. B.A.H. Rimu or No. 1 Dimension tanalised Pine.

Framing timbers: Boric treated Radiata Pine or boric treated B.A. Rimu.

Exterior finishing timbers: Weatherboard, fascias and trim, tanalith treated Rimu or Matai.
Vertical board ex 6" x 1" as above.

Interior Finishing Timbers. Shall be tanalised or Heart D.A. Rimu or Matai.

Flooring Timbers shall be tanalised or Heart D.A. Rimu or Matai, or may be pre-treated flooring grade particle board.

CONSTRUCTION.

BOTTOM PLATES & SLEEPERS. 4" x 2" & 4" x 3" respectively, wired or bolted to foundations and scarfed and halved.

WALL PLATES. 4" x 2" scarfed at joints and angles and to have 2 - ⅝" holes between each stud, with crossed galv. nails on top of bottom plate.

FLOOR JOISTS. 5" x 2" at 16" centres with piles and 4" x 3" bearers. 8" x 2" at 16" or 18" centres, with herringboning or solid dwanging through centre of spans over basement garages.

FLOOR & ROOF BEAMS. 10" x 4" underjoists where shown, supported on 4" x 4" posts and fixing and finished as detailed to basement garages.

Document Set ID: 419988
Version: 1, Version Date: 07/08/2005

75-3

STUDS. 4" x 2" at not more than 1'6" crs.
4" x 3" studs to openings.
4" x 4" (2/4" x 2") studs where noted and to openings over 9'0".

DWANGS. 3 rows to each wall, minimum size 3" x 2".

BRACES. 6" x 1" cut flush with framing.

LINTELS. According to NZSS 1900. To windows over 9'0" width - 2/10" x 2".

RAFTERS. 6" x 3" at 24" max. centres.

CEILING JOISTS. 4" x 2" at 20" crs.

RUNNERS. 4" x 2" if joists span over 8'0".
6" x 1" extra if joists span over 12'0".

RIDGES. 8" x 1".

CEILING STRAPPING. 3" x 1½" at 12" centres.

FASCIA BOARD. ex 10" x 1¼".

BARGE BOARDS. ex 10" x 1¼" mitred to eaves boards.

EAVES LINING. 3/16" flat 'Hardiflex' sheets.

EXTERNAL WALL SHEATHING.
a) Veneer. Stone veneer where shown.
b) Weatherboard. Where vertical weatherboard is shown, fix ¼" 'Hardiflex' to framing, then cover with ex 6" x 1" fine sawn boarding with gaps of ¾" between. Space evenly and use boarding as window trim. **horizontal weatherboard to be rusticated ex**
c) Fibrolite. Where shown, fix ¼" flat 'Hardiflex' (8" x 1" sheets, with Hardie nails punched, minimum joints evenly spaced.

BUILDING PAPER. Under all external wall sheathing, cover exterior face of studs with breather type building paper. Roof. Lay building paper over 2" wire netting.

INSULATION. To all exterior walls, line interior face of framing with double sided "Sisalation" or "Gib-foil". Lap ½" over studs. To all ceilings, line with double sided 'Sisalation', to underside of joists.

SKIRTING. 3" x ½" S.E.N. sanded and fitted neatly to floor.

ARCHITRAVES. 3" x ½". S.E.N. sanded and mitred.

CORNICE. ex 2" x 1" rebated at top edge.

WINDOW LININGS. ex 1"

PELMETS. To Flat 1, construct box pelmets over all Bedroom and Living windows.

INTERNAL LININGS.

Walls of Laundries, W.C., Bathroom, Kitchen - 3/16" hardboard.

Walls round bath and vanity unit up to 4'0" height - 3/16" lamiwall.

All other internal linings - Gibraltar board.

CEILINGS. Living Rooms, Kitchens and Bedrooms - Pinex panels.
All other ceilings - Pinex sheets.

JOINERY.

External doors. To have 1½" rebated jambs with weathered sill. Hang on 3 galv. butts. Main entrance doors 6'6" x 2'10", paint quality. Build frames with glazed sidelights to main entrance.

Document Set ID: 419988
Version: 1, Version Date: 07/08/2005

1875-3

ADDENDUM.

FLATS: 2. $423.50

&

3. $423.50

N.B. P.C. Sums for Kitchen, Bathroom, and Laundry Units, includes Vanity and Sink Tops in Formica, Tub Cupboards, and a minimum of three drawers to each Kitchen Set, and standard Shavings Cabinets with mirror doors.

Document Set ID: 419988
Version: 1, Version Date: 07/08/2005

35mm

BUILDING FILE

Code No. 75/3

Subject FLATS

No. Sheets 2

Permit No R2296

Date 18.10.71

MICROBOX

Document Set ID: 419987
Version: 1, Version Date: 28/04/2005

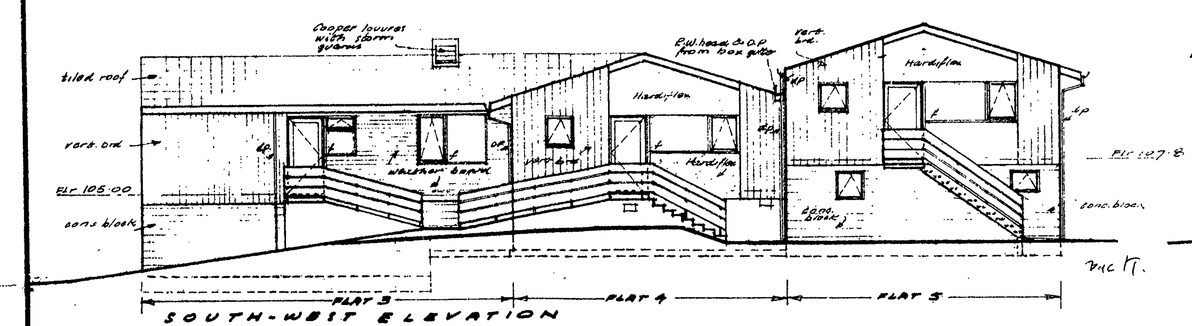

SOUTH-WEST ELEVATION

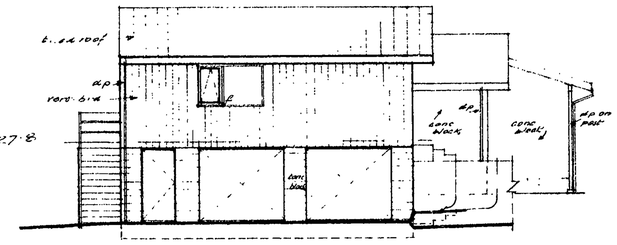

SOUTH-EAST ELEVATION

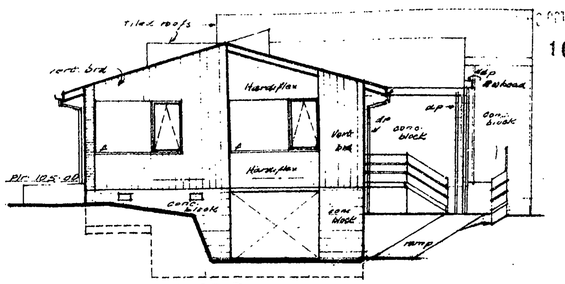

NORTH WEST ELEVATION

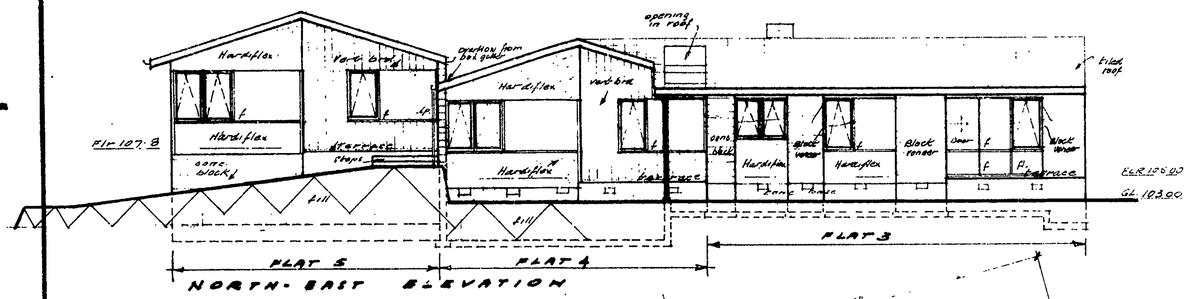

NORTH-EAST ELEVATION

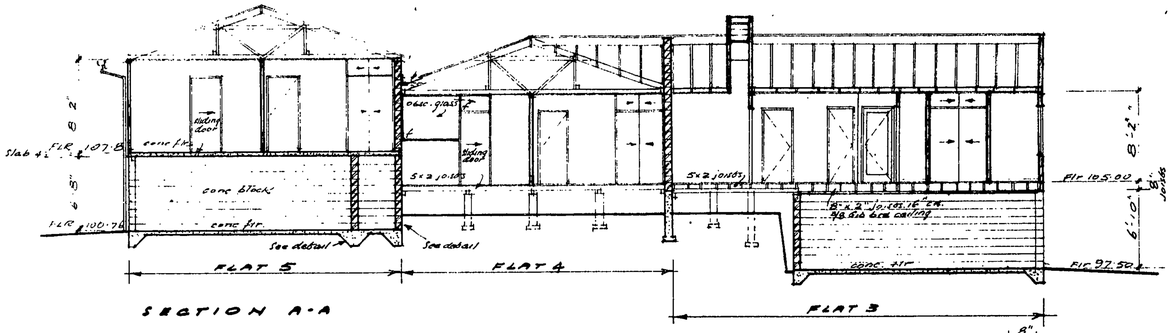

SECTION A-A

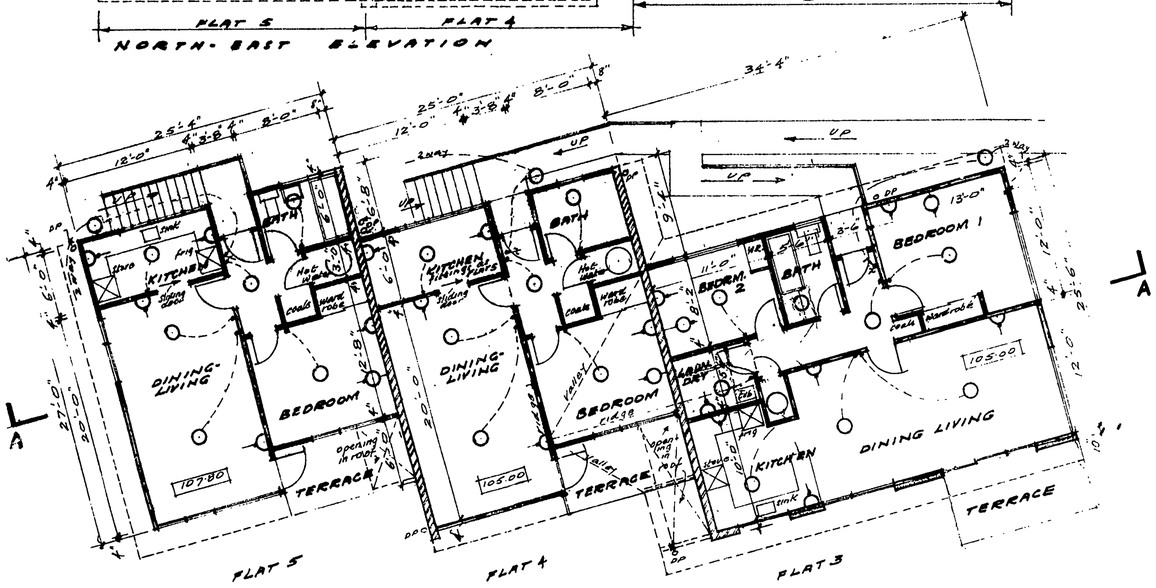

FLOOR PLAN

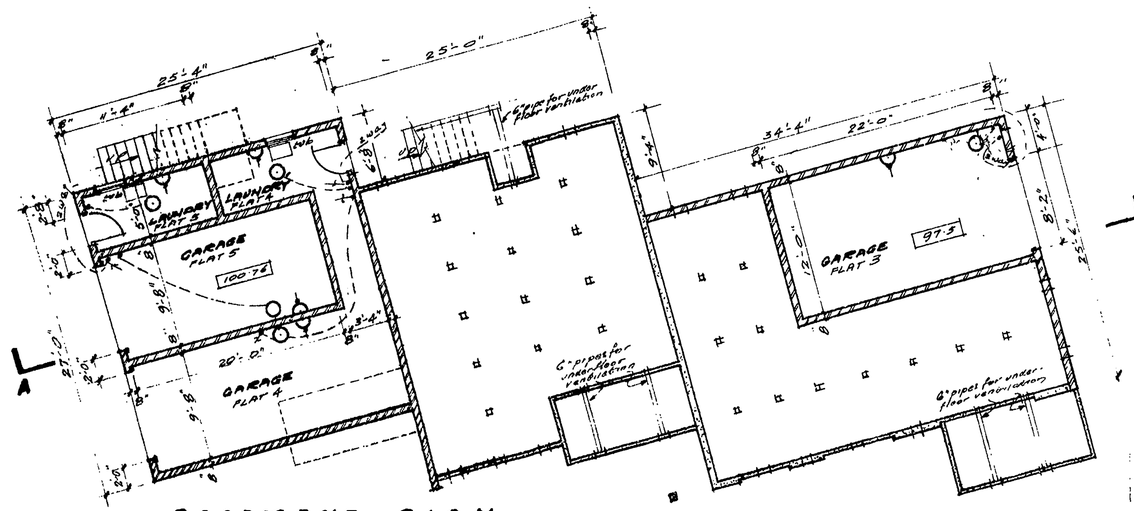

BASEMENT PLAN

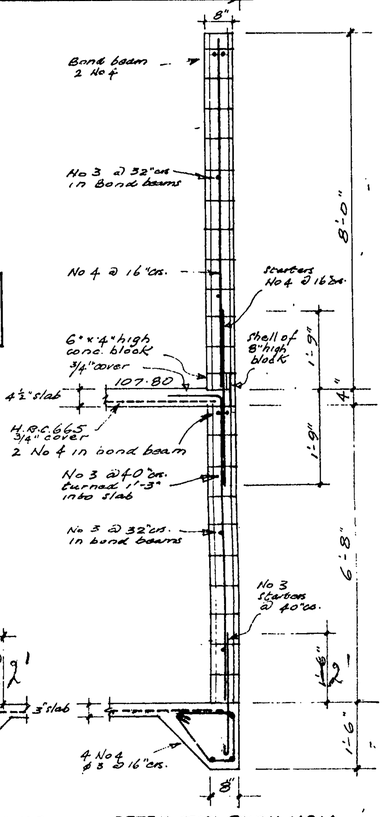

NOTE: See Sheet 3 for block types

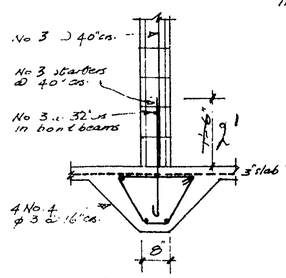

TYPICAL DETAIL FOOTING INSIDE WALLS BASEMENT FLAT 3

DETAIL CONC. BLOCK WALL BETWEEN FLATS 4 & 5

75-3

LEVELS - Datum 100.00 is top of fire hydrant cover in grass on east side of Robe St. near its intersection with Bultcel St.

Date	REVISION	By	Approved
5.5.7.	Details Block walls Flat 5	C.A.W.	R.J.B.

1/8" SCALE PLANS, ELEVATIONS & SECTIONS FLATS 3, 4 & 5
DETAILS SCALE 1/2" to 1'-0"

PROPOSED FLATS FOR
HENRY BROWN & COMPANY, LIMITED
CNR. ROBE & BULTEEL STREETS, NEW PLYMOUTH

BOWERING THOMSON BOON & ASSOCIATES
ARCHITECTS
CONSULTING ENGINEERS
TOWN PLANNERS
NATIONAL INSURANCE BUILDING
P.O. Box 195 Telephone 83947
Brougham Street New Plymouth

DRAWN BY C.A.W.	DATE DRAWN 3/3/71
TRACED C.A.W.	PRINTED 10 AUG 1971
CHECKED R.B.	JOB 502
ENGINEER R.J.B.	DRAWING NUMBER 4
APPROVED R.J.B.	SET OF 4

MICROBOX

10 25

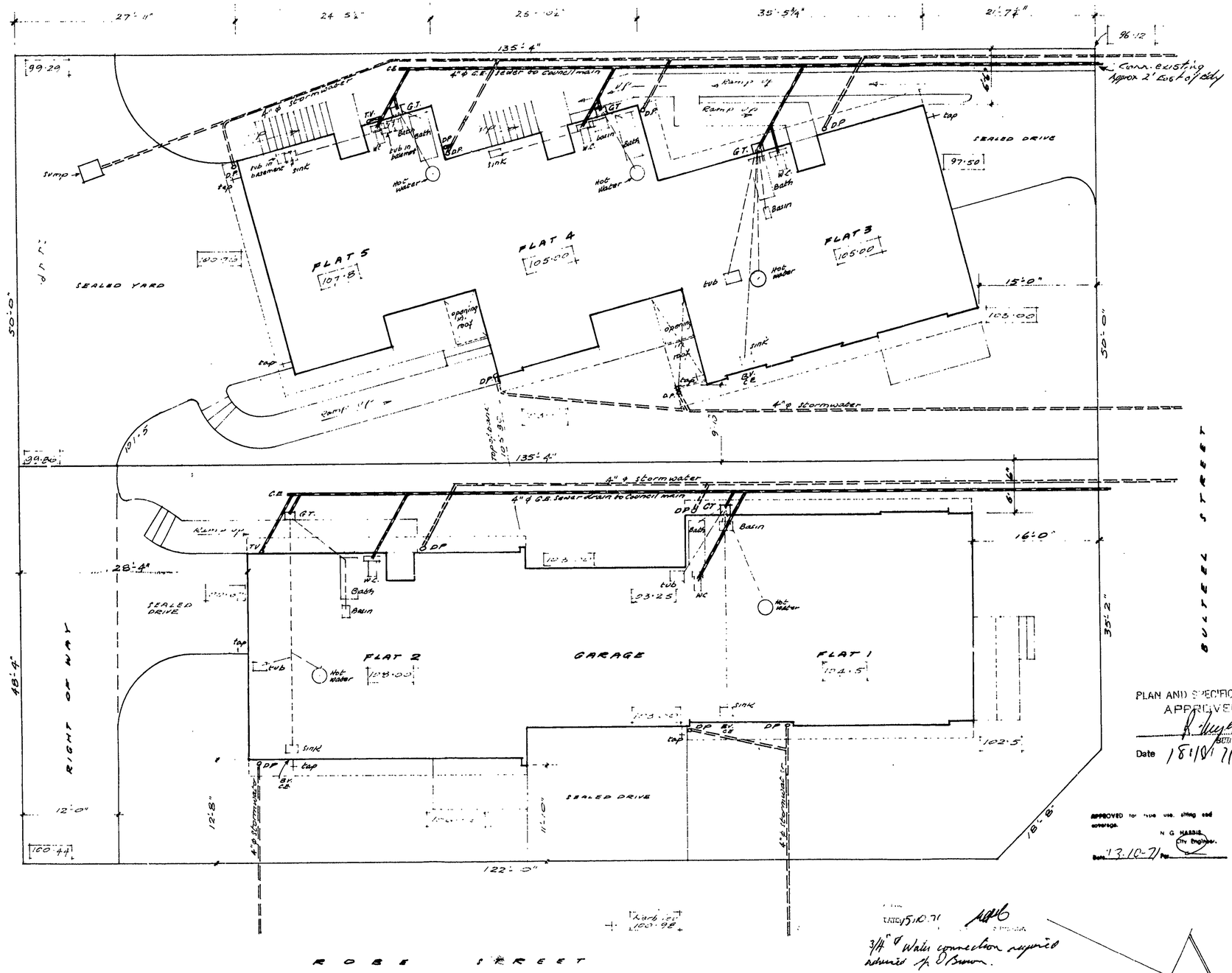

PLAN AND SPECIFICATIONS APPROVED
BUILDING INSPECTOR
Date 18/8/71

APPROVED for the use, siting and coverage.
N G HARRIS
City Engineer.
Date 13.10.71 Per

DATE 5.10.71
3/4" ø Water connection required
Advised Mr D Brown.

N

75-3

LEVELS: Datum 100·00' is top of fire hydrant cover in grass on East side of Robe St near its intersection with Bulteel St.

Date	REVISION	By	Approved
2.8.71	Dimens along west bdy added. " Flat 3 co axis bdy added. 2 DP's flat 4 altered	DAW	JB

SITE & DRAINAGE PLAN SCALE 1/8" to 1'-0"

PROPOSED FLATS FOR
HENRY BROWN & COMPANY, LIMITED
CNR. ROBE & BULTEEL STREETS, NEW PLYMOUTH

BOWERING THOMSON BOON & ASSOCIATES
ARCHITECTS
CONSULTING ENGINEERS
TOWN PLANNERS
NATIONAL INSURANCE BUILDING
P.O. Box 195 Telephone 83947
Brougham Street New Plymouth

DRAWN BY DAW	DATE DRAWN 16/2/71
TRACED DAW	PRINTED 10 AUG 1971
CHECKED BC	JOB 502
ENGINEER	DRAWING NUMBER 1
APPROVED JB	SET OF 4

35mm

BUILDING FILE

Code No. 75/3

Subject FLATS

No. Sheets 2

Permit No R2296

Date 18.10.71

MICROBOX

Document Set ID: 419986
Version: 1, Version Date: 28/04/2005

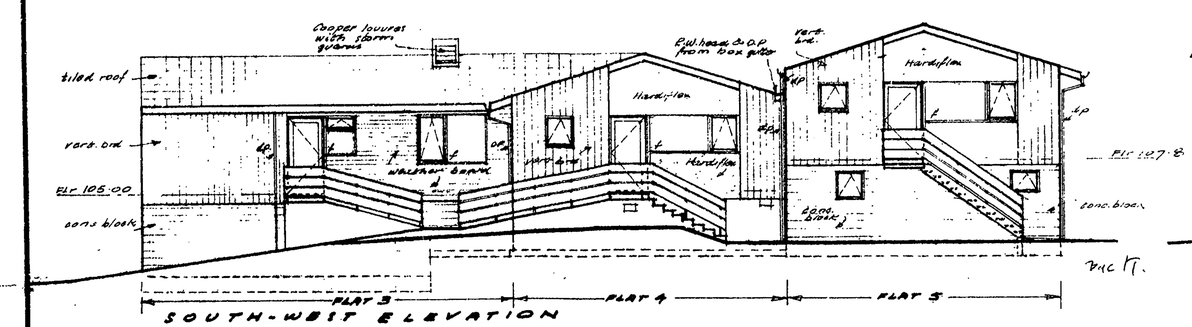

SOUTH-WEST ELEVATION

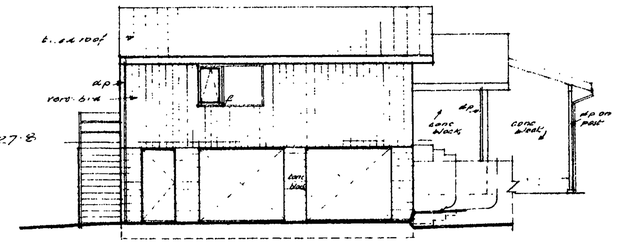

SOUTH-EAST ELEVATION

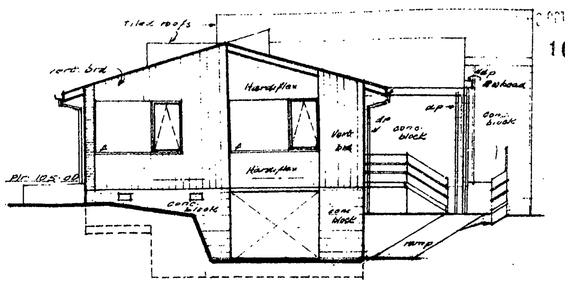

NORTH WEST ELEVATION

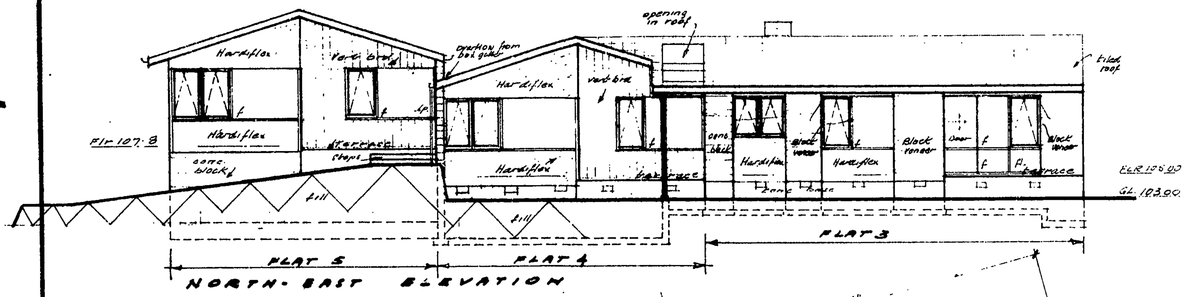

NORTH-EAST ELEVATION

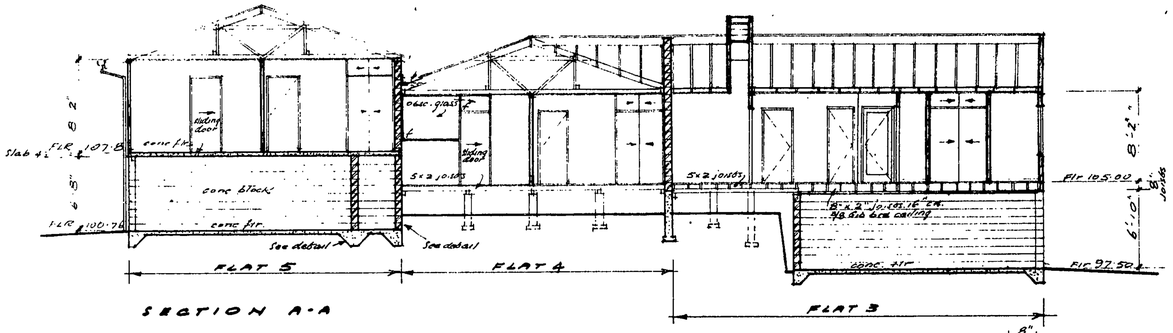

SECTION A-A

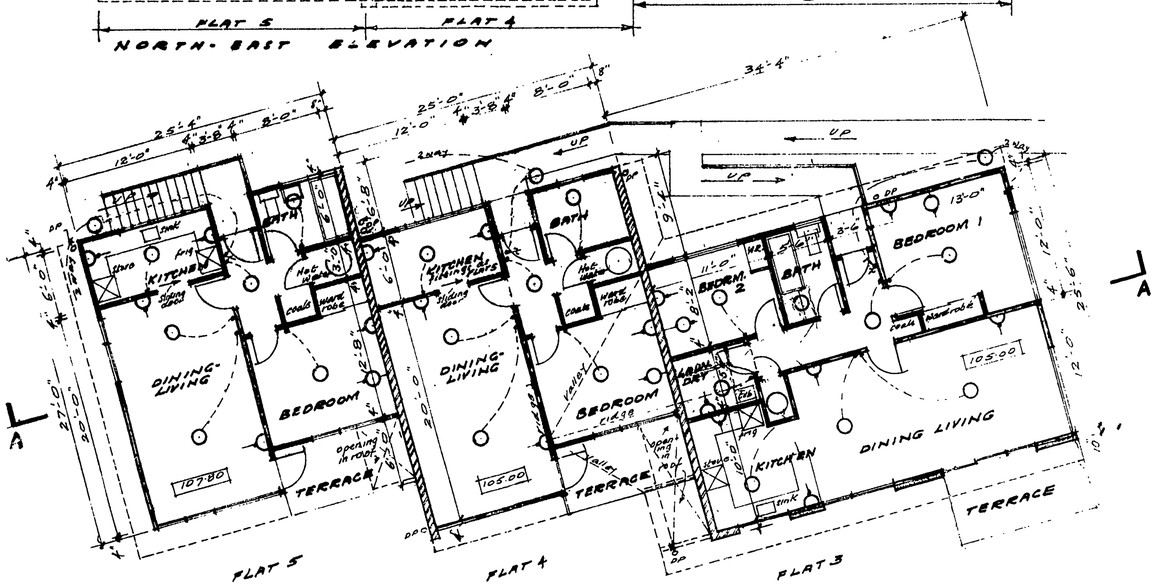

FLOOR PLAN

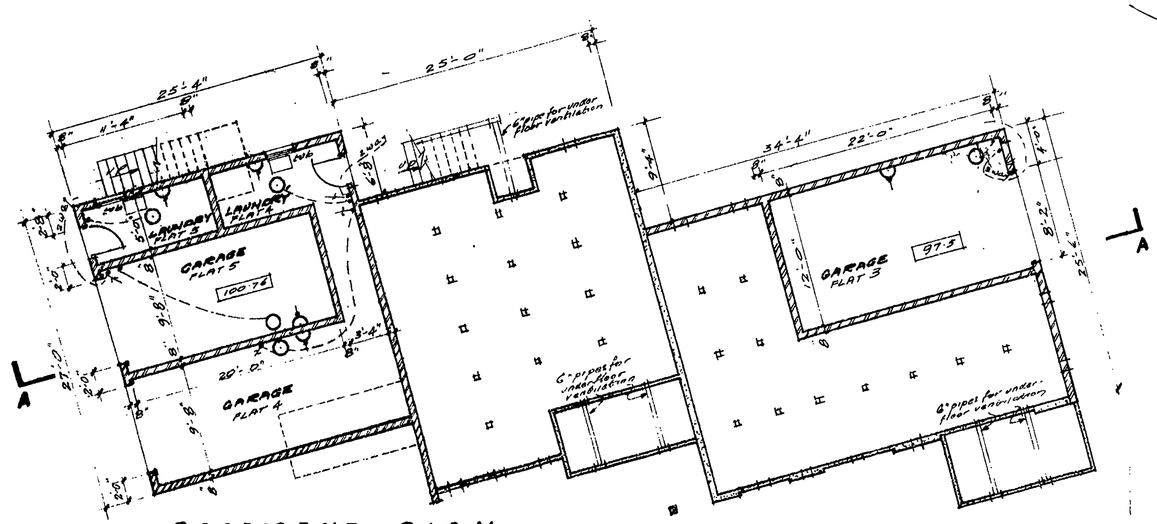

BASEMENT PLAN

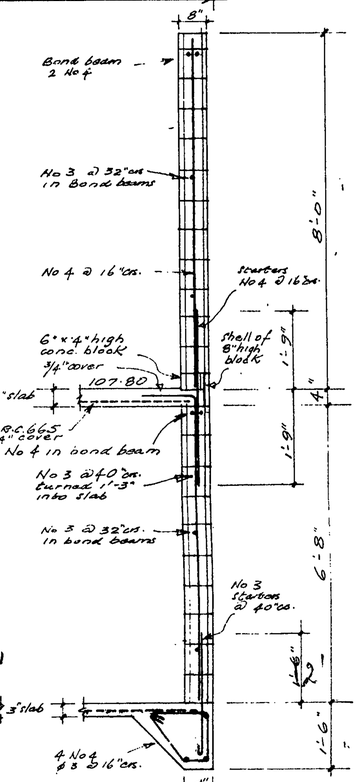

TYPICAL DETAIL FOOTING INSIDE WALLS BASEMENT FLAT 3

DETAIL CONC. BLOCK WALL BETWEEN FLATS 4 & 5

NOTE: See Sheet 3 for block types

75-3

LEVELS - Datum 100.00 is top of fire hydrant cover in grass on east side of Robe St. near its intersection with Bultcel St.

Date	REVISION	By	Approved
5.5.7.	Details Block walls Flat 5	C.A.W.	R.J.B.

1/8" SCALE PLANS, ELEVATIONS & SECTIONS FLATS 3, 4 & 5
DETAILS SCALE 1/2" to 1'-0"

PROPOSED FLATS FOR
HENRY BROWN & COMPANY, LIMITED
CNR. ROBE & BULTEEL STREETS, NEW PLYMOUTH

BOWERING THOMSON BOON & ASSOCIATES
ARCHITECTS
CONSULTING ENGINEERS
TOWN PLANNERS
NATIONAL INSURANCE BUILDING
P.O. Box 195 Telephone 83947
Brougham Street New Plymouth

DRAWN BY C.A.W.	DATE DRAWN 3/3/71
TRACED C.A.W.	PRINTED 10 AUG 1971
CHECKED R.J.B.	JOB 502
ENGINEER R.J.B.	DRAWING NUMBER 4
APPROVED R.J.B.	SET OF 4

MICROBOX

10 25

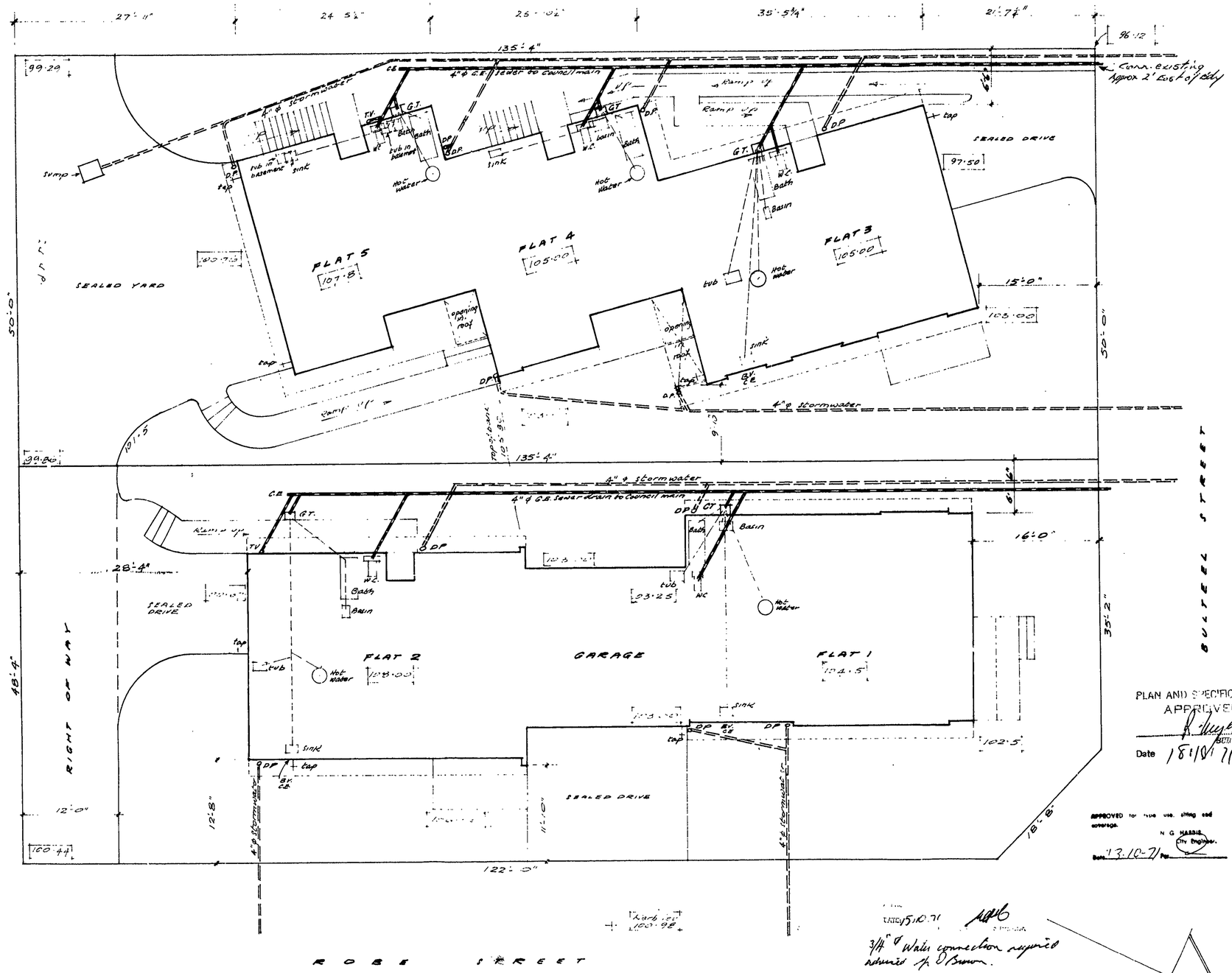

PLAN AND SPECIFICATIONS APPROVED
BUILDING INSPECTOR
Date 18/8/71

APPROVED for the use, siting and coverage.
N G HARRIS
City Engineer.
Date 13.10.71 Per

DATE 5.10.71
3/4" ø Water connection required
Admitted p/p D Brown.

75-3

LEVELS: Datum 100·00' is top of fire hydrant cover in grass on East side of Robe St near its intersection with Bulteel St.

Date	REVISION	By	Approved
2.8.71	Dimens along west bdy added. " Flat 3 co axis bdy added. 2 DP's flat 4 altered	DAW	JB

SITE & DRAINAGE PLAN SCALE 1/8" to 1'-0"

PROPOSED FLATS FOR
HENRY BROWN & COMPANY, LIMITED
CNR. ROBE & BULTEEL STREETS, NEW PLYMOUTH

BOWERING THOMSON BOON & ASSOCIATES
ARCHITECTS
CONSULTING ENGINEERS
TOWN PLANNERS
NATIONAL INSURANCE BUILDING
P.O. Box 195 Telephone 83947
Brougham Street New Plymouth

DRAWN BY DAW	DATE DRAWN 16/2/71
TRACED DAW	PRINTED 10 AUG 1971
CHECKED BC	JOB 502
ENGINEER	DRAWING NUMBER 1
APPROVED JB	SET OF 4

35mm

BUILDING FILE

Code No. 75/3

Subject FLATS

No. Sheets 2

Permit No R2296

Date 18.10.71

MICROBOX

Document Set ID: 419985
Version: 1, Version Date: 28/04/2005

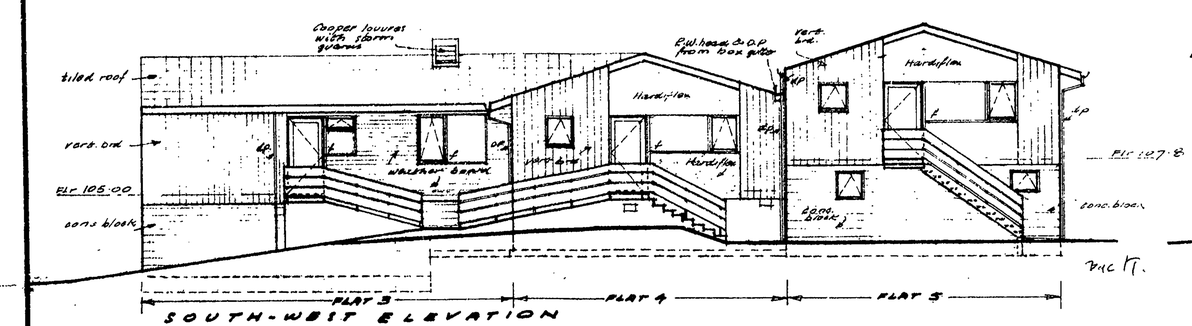

SOUTH-WEST ELEVATION

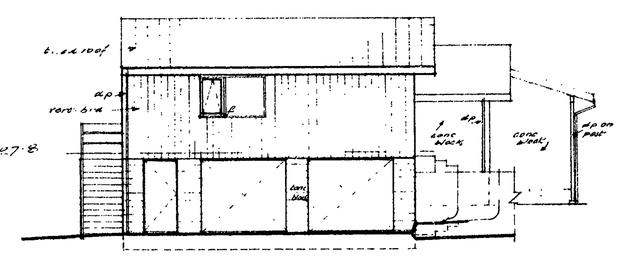

SOUTH-EAST ELEVATION

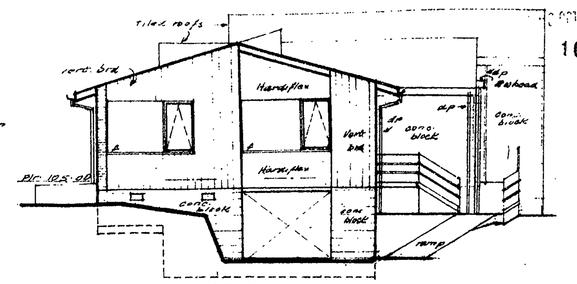

NORTH WEST ELEVATION

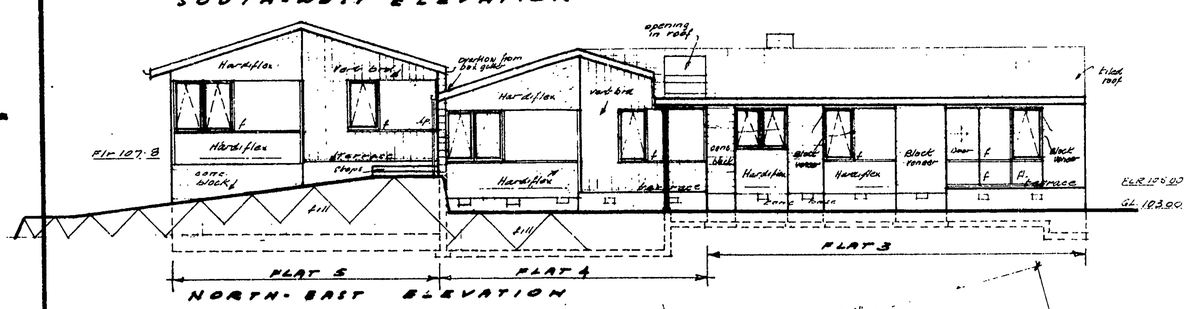

NORTH-EAST ELEVATION

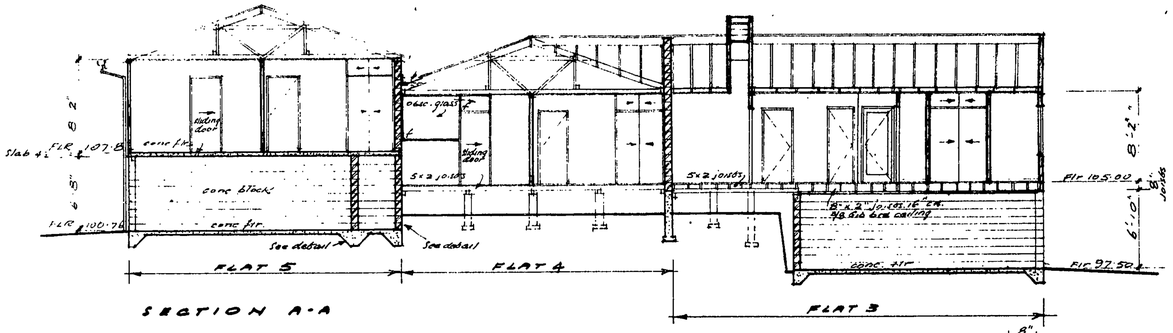

SECTION A-A

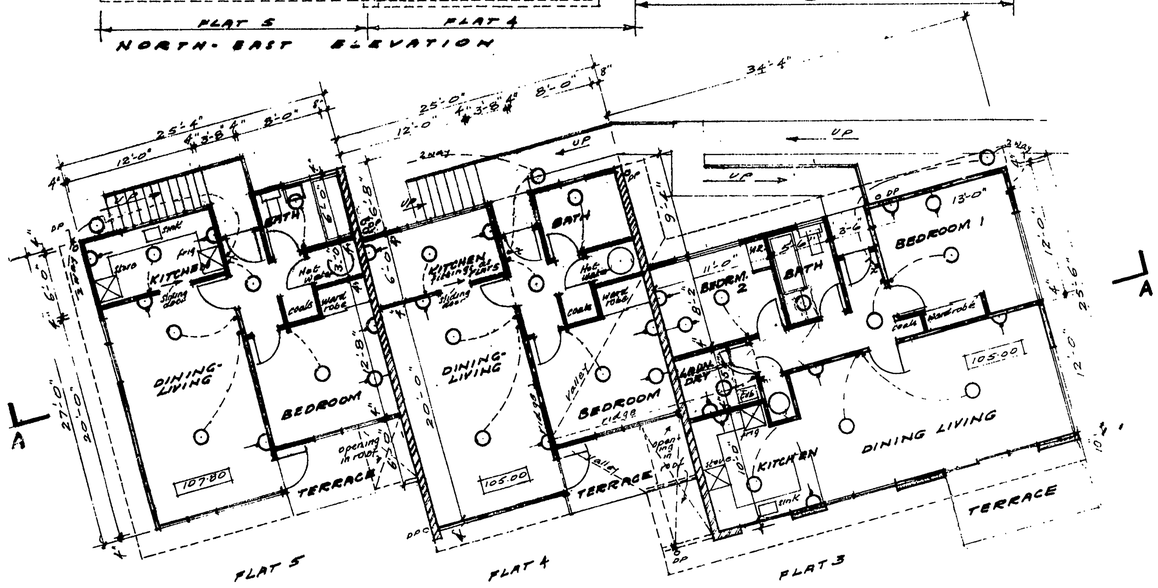

FLOOR PLAN

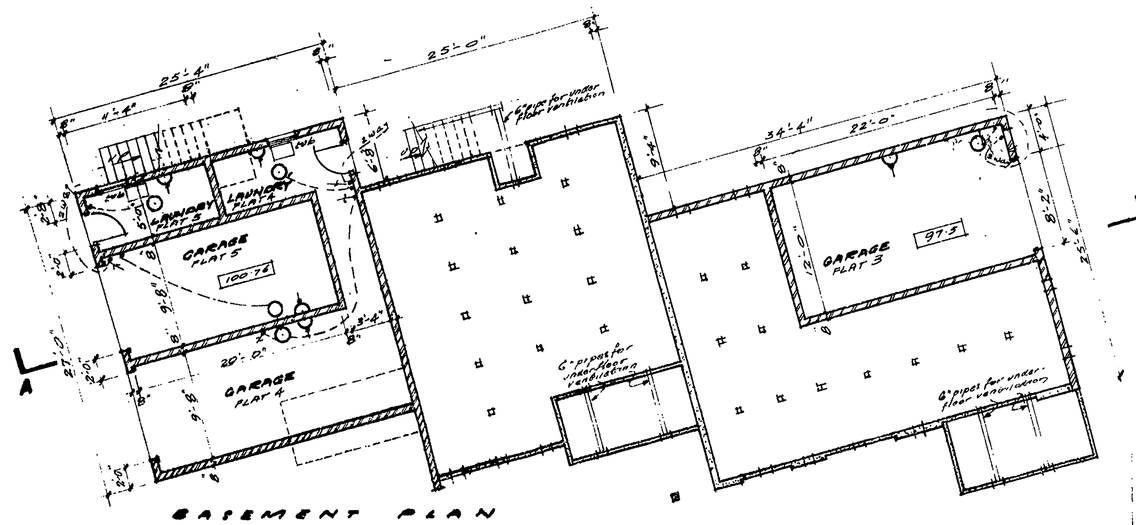

BASEMENT PLAN

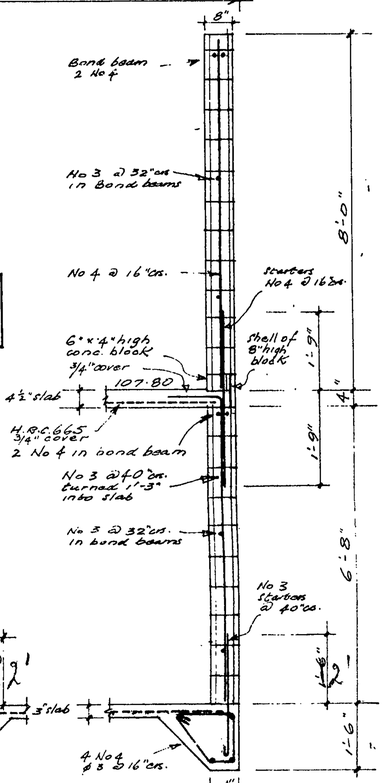

TYPICAL DETAIL FOOTING INSIDE WALLS BASEMENT FLAT 3

DETAIL CONC. BLOCK WALL BETWEEN FLATS 4 & 5

NOTE: See Sheet 3 for block types

75-3

LEVELS – Datum 100.00 is top of fire hydrant cover in grass on east side of Robe St. near its intersection with Bultcel St.

Date	REVISION	By	Approved
5.5.7.	Details Block Walls Flat 5	C.A.W.	R.J.B.

1/8" SCALE PLANS, ELEVATIONS & SECTIONS FLATS 3, 4 & 5
DETAILS SCALE 1/2" to 1'-0"

PROPOSED FLATS FOR
HENRY BROWN & COMPANY, LIMITED
CNR. ROBE & BULTEEL STREETS, NEW PLYMOUTH

BOWERING THOMSON BOON & ASSOCIATES
ARCHITECTS
CONSULTING ENGINEERS
TOWN PLANNERS
NATIONAL INSURANCE BUILDING
P.O. Box 195 Telephone 83947
Brougham Street New Plymouth

DRAWN BY C.A.W.	DATE DRAWN 3/3/71
TRACED C.A.W.	PRINTED 10 AUG 1971
CHECKED	JOB 502
ENGINEER R.J.B.	DRAWING NUMBER 4
APPROVED R.J.B.	SET OF 4

MICROBOX

10 25

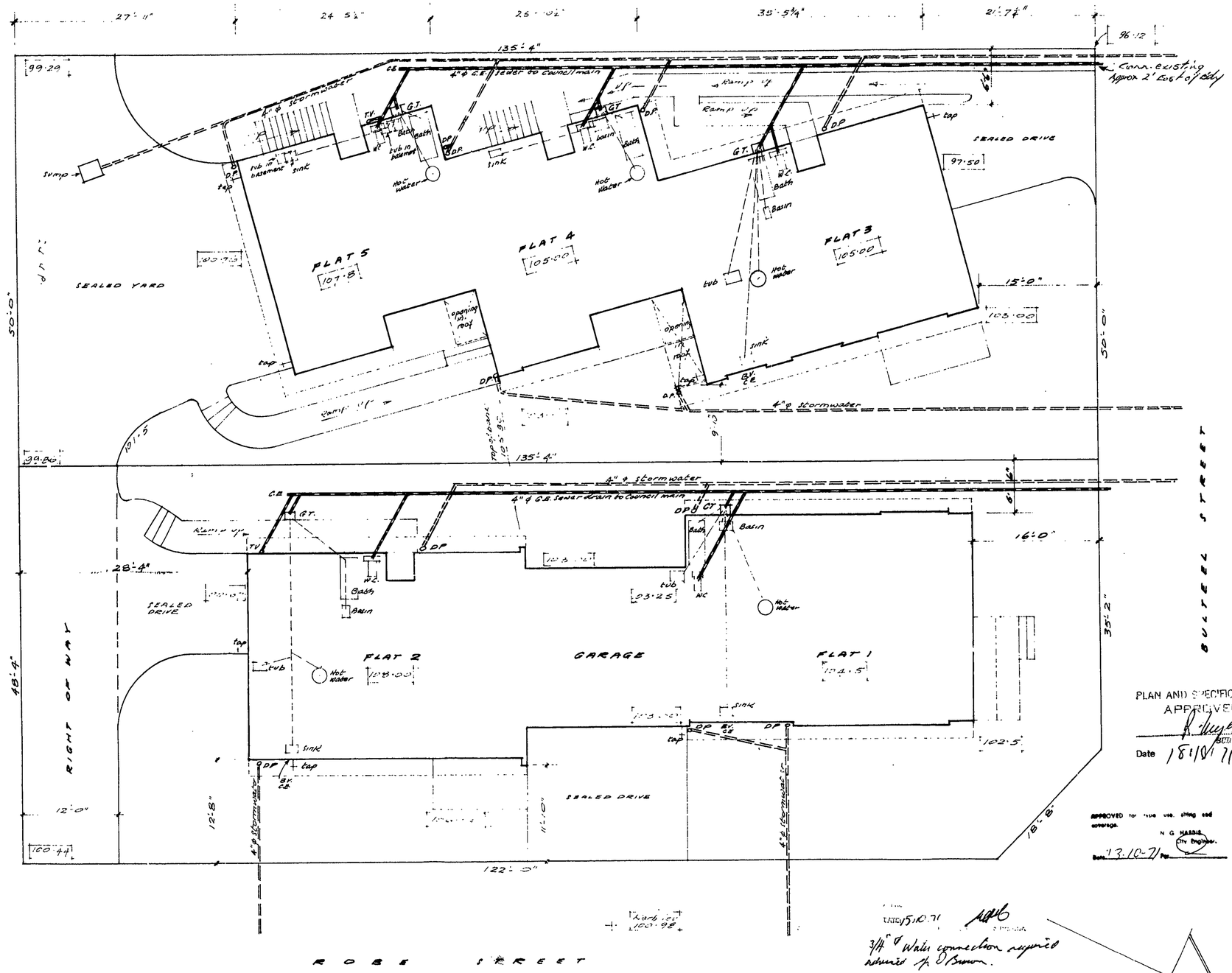

PLAN AND SPECIFICATIONS APPROVED
BUILDING INSPECTOR
Date 18/8/71

APPROVED for use, siting and coverage.
N G HARRIS
City Engineer.
Date 13.10.71 Per

DATE 5.10.71
3/4" ø Water connection required
advised Mr D Brown.

75-3

LEVELS: Datum 100·00' is top of fire hydrant cover in grass on East side of Robe St near its intersection with Bulteel St.

Date	REVISION	By	Approved
2.8.71	Dimens along west bdy added. " Flat 3 co axis bdy added. 2 DP's flat 4 altered	DAW	JB

SITE & DRAINAGE PLAN SCALE 1/8" to 1'-0"

PROPOSED FLATS FOR
HENRY BROWN & COMPANY, LIMITED
CNR. ROBE & BULTEEL STREETS, NEW PLYMOUTH

BOWERING THOMSON BOON & ASSOCIATES
ARCHITECTS
CONSULTING ENGINEERS
TOWN PLANNERS
NATIONAL INSURANCE BUILDING
P.O. Box 195 Telephone 83947
Brougham Street New Plymouth

DRAWN BY DAW	DATE DRAWN 16/2/71
TRACED DAW	PRINTED 10 AUG 1971
CHECKED BC	JOB 502
ENGINEER	DRAWING NUMBER 1
APPROVED JB	SET OF 4

16 mm 35 mm

BUILDING FILE

Code No. 75/3

Subject FLATS

No. Sheets lots

Permit No R2296

Date 18.10.71

Document Set ID: 419984
Version: 1, Version Date: 07/08/2005

75-3

Street No. 3 Butler St. Lot ..... D.P. ..... Sec. Pts 157, 788 T of NP.

Nature of Work 3 Flats

Zone Residential

BUILDING PLAN REGISTER

Owner Brown Land Development Date 18.10.71

Address PO Box 444 N.P. File No. 10/25/71

Builder Henry Byrne Co. Ltd Receipt No. 2296

Address 41 Kitchener St. Inglewood Special requirements

Value 26,866.00

Area of buildings ..... Sq.ft.

Area of outbldgs ..... " "

Area of new work ..... " "

Remarks & inspections Not Started 8-11-71 Not Started 15-11-71 Not started "For Sale" notices on site 8-12-71 Nothing done 28.1.72 footings & steel 8.2.72 further footings & steel 30.4.72 flats almost finished - Ret wall being built on side body to 6' high - one complete on front. Body to 6' high

Completed

NEW PLYMOUTH CITY COUNCIL
CITY ENGINEERS DEPARTMENT

75-3

ESTIMATE FOR WATER CONNECTION

№ 150

Name of Project 3 Flats for Brown Lands Development Date 11.10.71

Plan No.

Address 3 Bellett St New Plymouth. Lot No. 1 D.P. New

Purpose of Supply: Domestic & Trade ✓ Type of Building 3 Flats (Dwelling, Flats, Offices, Factory, etc.)

Fire ✗

New Subdivision ✗

Distance, Building to Main 110' Altitude of Building 135' (City Datum)

Size of Connection ~~requested~~ recommended. 3/4" ϕ ESTIMATED COST $50

REMARKS

Recommend 1/2" ϕ off 3/4" ϕ to each flat and that each unit have its own isolating valve.

This estimate is NOT a quotation and is subject to amendment when final plans are submitted.

for City Engineer

Masterprint 21293

Document Set ID: 419984
Version: 1, Version Date: 07/08/2005

P.W. 19A (Rev. 11/68)

78-3

IN REPLY PLEASE QUOTE
No. 71/152

Telephone 46 080
Telegraphic Address:
"COSTWORKS"

MINISTRY OF WORKS
HEAD OFFICE
BUILDING PROJECTS AUTHORITY

P.O. Box 12-041,
Wellington, N.Z.

20 October 1971

TO Brown Lands Development Ltd.,
P.O. Box 400,
NEW PLYMOUTH.

CERTIFICATE OF REGISTRATION OF PROPOSED PRIVATE BUILDING PROJECT

1. In accordance with the provisions of the Economic Stabilisation (Building Registration and Construction) Regulations 1970 and Amendment No.1, the following construction work, according to details supplied by you has been registered:

(a) Name of owner and address: As above

(b) Type of construction work (e.g. factory, office, etc): 5 Apartments

(c) Location of the work: 5 Bulteel St., New Plymouth

(d) Name of local authority in whose district the work will be carried out: New Plymouth City Council

(e) Estimated cost of the work: $23,000.00

(f) Estimated date of commencement of the work: November 1971

(g) Estimated date of completion of the work: March 1972

2. This Certificate of Registration must be attached to your application to the local authority for the issue of the building permit.

3. This Certificate is valid for three months after the date specified in (f) above. If construction work is abandoned or a permit is not uplifted within three months, registration shall lapse.

4. The local authority will complete, detach, and return the following information to me after the building permit has been issued.

R.F. Paris
Building Projects Authority

Document Set ID: 419984
Version: 1, Version Date: 07/08/2005

75-3

NEW PLYMOUTH CITY COUNCIL

FOR OFFICE USE: File No. 10 25 Check Sheet No. 3573
Receipt No. 2296 Sewer Sheet No. 87
Date of Receipt 8/10/71 Zone Residential

To the City Engineer Date 8-10-71

APPLICATION FOR BUILDING PERMIT and/or services Lot No. 1

At (House No.) 3 Bulteel St D.P. New D.P.

For erection of 3 Flats Sec. No. PD 787 & 788 T. of N.P.

OWNER Brown Lands Developments ADDRESS Box 400 New Plymouth

Proposed use Residential

Foundation Concrete Walls Block veneer & W.B. Roof Metal Tiles

AREA of existing buildings - - - ..... sq. ft.

AREA of existing accessory buildings - ..... sq. ft.

AREA of building in application - - 2,200 sq. ft.

ESTIMATED FINISHED VALUE			FEES
Building (including roofing, downpipes, flashings, etc.)		$ 20 066 . 00	$ 64 . 00
Sanitary plumbing and drainage		$ 2934 . 00	$ 18 . 00
STORMWATER CONNECTION:	Distance from left boundary	23 000 00	
	Depth and size of service		$
SEWER CONNECTION:	Distance from left boundary		
	Depth and size of service		$ 36 . 00
WATER CONNECTION:	Distance from left boundary	To be charged	
	Depth and size of service		$
WATER (Building)			$ 1 . 00
VEHICLE CROSSING: When required		Existing	
Distance from left boundary			
Type of footpath			$
Type of crossing			$
Removal of existing crossing			$
DEPOSIT FOR DAMAGE TO FOOTPATH			$ 100 . 00
HOARDINGS ..... months			$
INSPECTION of second-hand building or materials			$
BUILDING RESEARCH LEVY			$ 11 . 50
			$ 230 . 50

BUILDER Henry Brown & Co Ltd 41 Kelly St Inglewood

Starting date Nov. 1971 Finishing date March 1972

NAME AND ADDRESS OF APPLICANT Brown Lands Development Ltd PO Box 400 New Plymouth Phone 5642

Signature of Applicant C E O'Regan

SANITARY PLUMBING AND DRAINAGE APPLICATION

To be advised

Signature of Registered Plumber A.T. Burt Ltd.

Signature of Registered Drainlayer Ditto.

ESTIMATED FINISHED VALUE OF WORK

PLUMBING - -	$ 2,266 .
DRAINAGE - -	$ 668 .
	$ 2934 .

Document Set ID: 419984
Version: 1, Version Date: 07/08/2005

75-3 7

SPECIFICATION.

10 25

FIVE FLATS FOR
HENRY BROWN & CO. LTD.,
at
CORNER OF ROBE & BULTEEL STS.,
NEW PLYMOUTH.

BOWERING THOMSON BOON & ASSOCIATES,
Architects & Consulting Engineers,
Brougham Street,
New Plymouth.

JOB NO. 502. DECEMBER 1970.

GENERAL CONDITIONS. Structural and construction work shall as a minimum comply with NZSS 1900.

The whole of the work to be carried out shall comply with the requirements of the Local authority, and Lending Authority if applicable.

At completion the premises are to be left ready for occupation.

INSURANCE. The Contractor shall insure the works against fire and shall effect and maintain a Public Risk Insurance Policy.

PERMITS. Take out all necessary building permits and licences and pay all fees required, and conform in all respects to the requirements of the New Plymouth City Council.

EXCAVATIONS. Excavate to solid bottom for all foundations, piles, sewer drains etc. at least 1'6" below original ground levels. Trenches shall be true and even.

FILLING. To be thoroughly consolidated hardfill.

SITE CLEARANCE. Clear vegetation from site. Remove timber waste from under building.

CONCRETE. All concrete shall be composed of 6 parts clean shingle to 1 part Portland cement, thoroughly mixed by machine, or supplied from a central mixing plant. Minimum crushing strength shall be 2500 lbs. at 28 days.

PILES. Piles shall be 6" x 6" precast concrete with wires embedded. Piles shall project at least 12" above ground and be set in 12" x 12" x 6" concrete pads. They shall be spaced 4'6" crs. in rows up to 6'6" apart.

FOOTINGS AND FOUNDATION WALLS. All concrete footings and foundation walls shall be constructed as detailed. Typical section are shown, but each section of footing and wall shall conform to the general principles set out. Reinforcing steel shall be accurately formed and located, with adequate cover and held in position temporarily whilst concrete is being placed.

Concrete shall be placed in lifts not exceeding 4'0" unless chutes are used to avoid segregation of aggregate.

Formwork and placing methods shall produce 'fairface' concrete where exposed externally.

DRIVES. Vehicle access drives to Garages shall be tar-sealed, with 5" graded metal, 2 coats hot bitumen and chips. Kerbs shall be of high salt retention tanalised pine, 4" x 1½".

FLOOR AND PATHS. To Garages lay 3" thickness concrete reinforced with 665 RRC mesh and finished with steel or power float. Paths shall be 2½" thickness, with lightly 'broomed' finish where on gradient. Divide slabs and paths into lengths not exceeding 12 feet.

Document Set ID: 419984
Version: 1, Version Date: 07/08/2005

UNDERFLOOR VENTILATION. 16" x 8" pre-cast concrete vents as shown.

DAMP COURSE. Lay 2 ply malthoid damp course between concrete and timber.

CONCRETE BLOCK WALLS. Party walls shall be of 8" hollow concrete blocks, reinforced as shown on sections. Bond beams shall be used where horizontal steel occurs. Thoroughly fill all cavities where steel is located, with concrete having ½" max. size aggregate.

BLOCK VENEER.

Blocks. Firth's Summit Stone 'Colonial White' 16" x 4" x 4" blocks, with raked joints finished in natural mortar.

Ties. Galvanised ties fixedto faces of studs, to every fifth course not more than 3'0" apart and staggered. Not more than 6" from an opening.

Bonding. Build in brick bonding at intervals not exceeding 2'0" in height.

Lintels. 3½" x 3½" x 5/16" m.s. angles, galvanised bearing 9" into blockwork each side.

Vermin proof the cavities with 4" wide strips of fine galv. wire at bottom plate level.

Sills. 6" x 6" quarry tiles.

DRAINLAYER.

Soildrains: 4" first quality glazed earthenware, rubber ring jointed with all necessary fittings to complete drains in accordance with local body requirements.

Connect to City Council sewer where directed.

Stormwater. 4" unglazed field drains to soakholes 3'0" dia., 5'0" depth.

TIMBER. All timber to comply with NZSS No. 1900 or variations approved by the Lending Authority if applicable, but to be generally as follows:-

Sub floor timber. B.A.H. Rimu or No. 1 Dimension tanalised Pine.

Framing timbers: Boric treated Radiata Pine or boric treated B.A. Rimu.

Exterior finishing timbers: Weatherboard, fascias and trim, tanalith treated Rimu or Matai.
Vertical board ex 6" x 1" as above.

Interior Finishing Timbers. Shall be tanalised or Heart D.A. Rimu or Matai.

Flooring Timbers shall be tanalised or Heart D.A. Rimu or Matai, or may be pre-treated flooring grade particle board.

CONSTRUCTION.

BOTTOM PLATES & SLEEPERS. 4" x 2" & 4" x 3" respectively, wired or bolted to foundations and scarfed and halved.

WALL PLATES. 4" x 2" scarfed at joints and angles and to have 2 - ⅝" holes between each stud, with crossed galv. nails on top of bottom plate.

FLOOR JOISTS. 5" x 2" at 16" centres with piles and 4" x 3" bearers. 8" x 2" at 16" or 18" centres, with herringboning or solid dwanging through centre of spans over basement garages.

FLOOR & ROOF BEAMS. 10" x 4" underjoists where shown, supported on 4" x 4" posts and fixing and finished as detailed to basement garages.

Document Set ID: 419984
Version: 1, Version Date: 07/08/2005

75-3

STUDS. 4" x 2" at not more than 1'6" crs.
4" x 3" studs to openings.
4" x 4" (2/4" x 2") studs where noted and to openings over 9'0".

DWANGS. 3 rows to each wall, minimum size 3" x 2".

BRACES. 6" x 1" cut flush with framing.

LINTELS. According to NZSS 1900. To windows over 9'0" width - 2/10" x 2".

RAFTERS. 6" x 3" at 24" max. centres.

CEILING JOISTS. 4" x 2" at 20" crs.

RUNNERS. 4" x 2" if joists span over 8'0".
6" x 1" extra if joists span over 12'0".

RIDGES. 8" x 1".

CEILING STRAPPING. 3" x 1½" at 12" centres.

FASCIA BOARD. ex 10" x 1¼".

BARGE BOARDS. ex 10" x 1¼" mitred to eaves boards.

EAVES LINING. 3/16" flat 'Hardiflex' sheets.

EXTERNAL WALL SHEATHING.
a) Veneer. Stone veneer where shown.
b) Weatherboard. Where vertical weatherboard is shown, fix ¼" 'Hardiflex' to framing, then cover with ex 6" x 1" fine sawn boarding with gaps of ¾" between. Space evenly and use boarding as window trim. **horizontal weatherboard to be rusticated ex**
c) Fibrolite. Where shown, fix ¼" flat 'Hardiflex' (8" x 1" sheets, with Hardie nails punched, minimum joints evenly spaced.

BUILDING PAPER. Under all external wall sheathing, cover exterior face of studs with breather type building paper. Roof. Lay building paper over 2" wire netting.

INSULATION. To all exterior walls, line interior face of framing with double sided "Sisalation" or "Gib-foil". Lap ½" over studs. To all ceilings, line with double sided 'Sisalation', to underside of joists.

SKIRTING. 3" x ½" S.E.N. sanded and fitted neatly to floor.

ARCHITRAVES. 3" x ½". S.E.N. sanded and mitred.

CORNICE. ex 2" x 1" rebated at top edge.

WINDOW LININGS. ex 1"

PELMETS. To Flat 1, construct box pelmets over all Bedroom and Living windows.

INTERNAL LININGS.

Walls of Laundries, W.C., Bathroom, Kitchen - 3/16" hardboard.

Walls round bath and vanity unit up to 4'0" height - 3/16" lamiwall.

All other internal linings - Gibraltar board.

CEILINGS. Living Rooms, Kitchens and Bedrooms - Pinex panels.
All other ceilings - Pinex sheets.

JOINERY.

External doors. To have 1½" rebated jambs with weathered sill. Hang on 3 galv. butts. Main entrance doors 6'6" x 2'10", paint quality. Build frames with glazed sidelights to main entrance.

Document Set ID: 419984
Version: 1, Version Date: 07/08/2005

1875-3

ADDENDUM.

FLATS: 2. $423.50

&

3. $423.50

N.B. P.C. Sums for Kitchen, Bathroom, and Laundry Units, includes Vanity and Sink Tops in Formica, Tub Cupboards, and a minimum of three drawers to each Kitchen Set, and standard Shavings Cabinets with mirror doors.

Document Set ID: 419984
Version: 1, Version Date: 07/08/2005

No. 3 Sec. Lot 1 D.P. New

Address BULTEEL STREET

DRAINAGE AND PLUMBING REGISTER

OWNER BROWN LANDS DEVELOP.

ADDRESS

BUILDER HENRY BROWN & Co LTD

PLUMBER A & T BURT LTD

DRAINLAYER " "

10/25/71 PERMITS

PLUMBING 2266.00

DRAINAGE 668.00

VALUE $2934.00

NATURE OF WORK 3 FLATS
3/4" Water Supply

DRAIN TESTED / / PLUMBING PASSED 20/11/72

FALL AND DESCRIPTION Good falls to existing connection

Inspector.

Document Set ID: 661069
Version: 1, Version Date: 10/10/2008

DRAINAGE PLAN SCALE

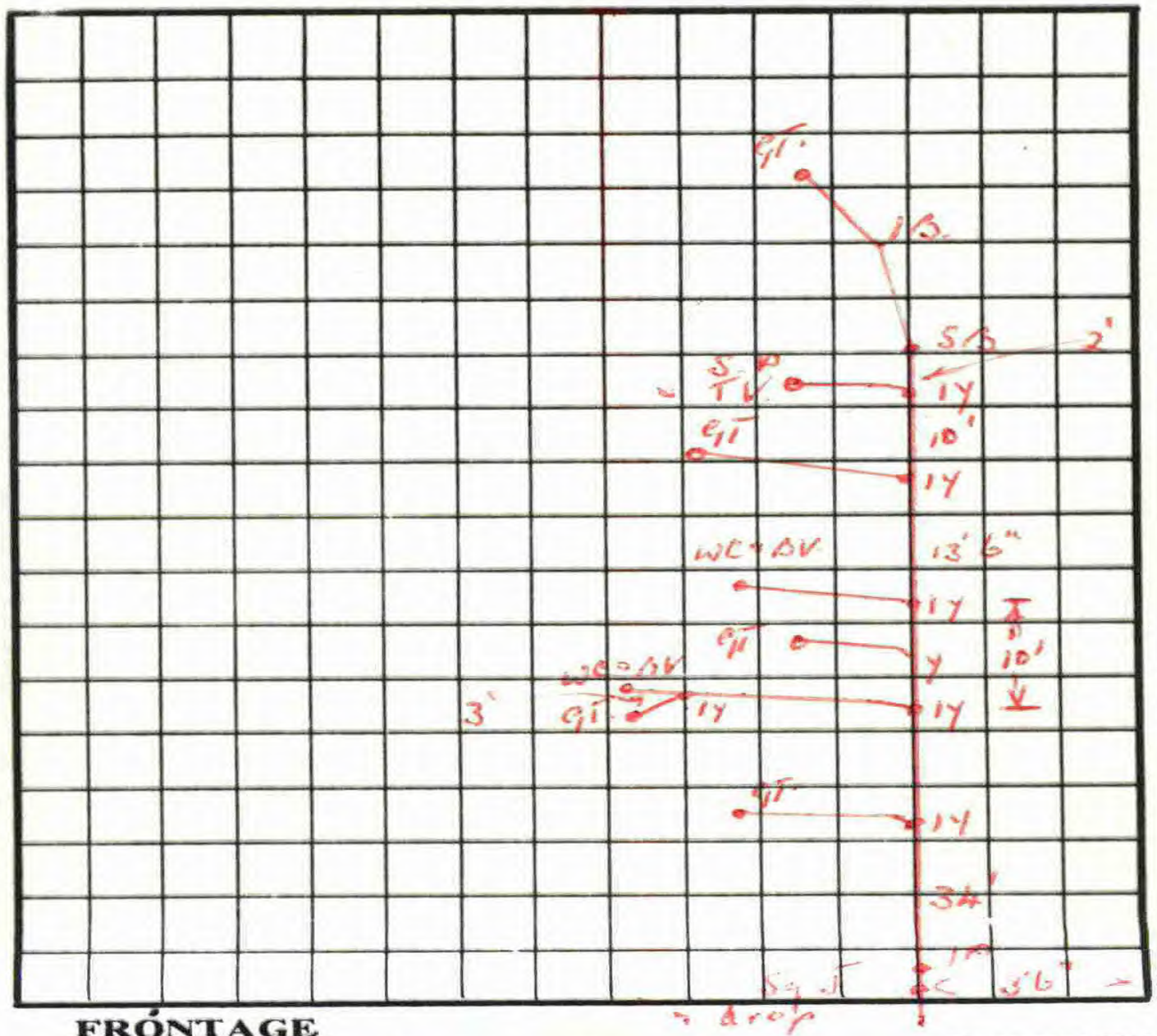

FRÓNTAGE

Masterprint 8958

3 Bulteel St.

Document Set ID: 661069
Version: 1, Version Date: 10/10/2008

POWERED BY
ownly
Licensed REAA 2008

move.

darrell paterson

OWNER & SALESPERSON

027 493 7134
darrell@bestmove.co.nz
bestmove.co.nz

riley blair

SALES ASSOCIATE TO DARRELL PATERSON

027 441 6308
riley@bestmove.co.nz
bestmove.co.nz