SDC - Approved Building Consent Document - BC250732 - Pg 1 of 40 - 6/06/2025 - sandea

Approved Building Consent documents

Please note: A copy of the stamped approved documents must be available on site for all inspections.

Inspection booking timeframes

Call received	before 3pm inspection will be done	after 3pm inspection will be done
Monday	Wednesday	Thursday
Tuesday	Thursday	Friday
Wednesday	Friday	Monday
Thursday	Monday	Tuesday
Friday	Tuesday	Wednesday

For building inspections and enquiries phone ContactUs on:
03 347 2800.

Please ensure all work for inspection is ready the day before.
Incomplete work requiring re-inspection will incur an additional inspection fee.

Indicative site plan only. The finished floor level must comply with the attached Flood Assessment Certificate

The boundaries, dimensions & areas shown on this plan are subject to survey.

GIS data is sourced from GRIP records on 28/04/25 and is indicative only.

Abuttal boundaries sourced from Landonline XML data.

Survey undertaken 23/04/2025

Legal Description: Lot 15 DP 580639
Comprised in: RT 1086187
Total Area: 670m²

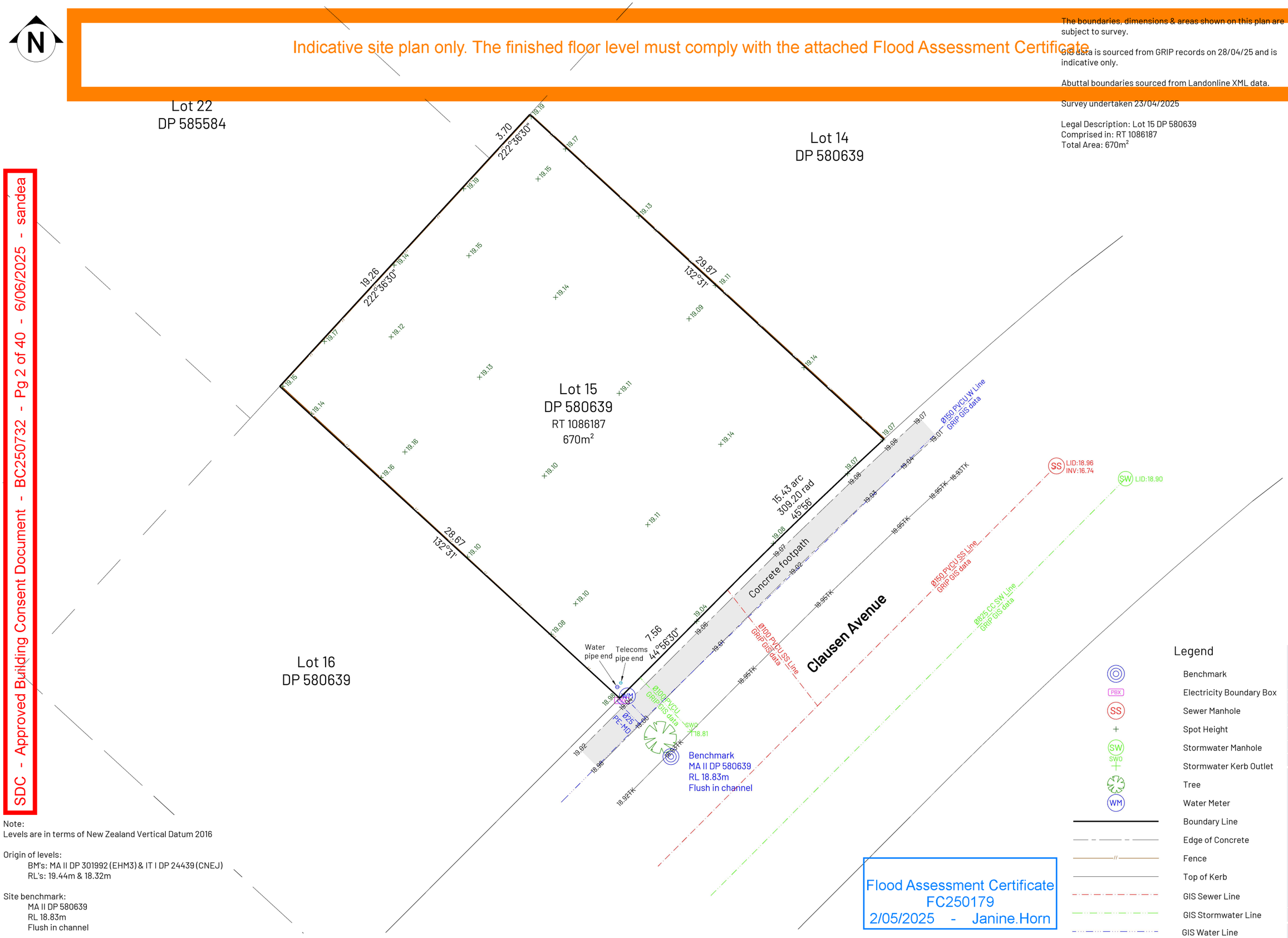

Flood Assessment Certificate
FC250179
2/05/2025 - Janine.Horn

Legend

- Benchmark
- Electricity Boundary Box
- Sewer Manhole
- Spot Height
- Stormwater Manhole
- Stormwater Kerb Outlet
- Tree
- Water Meter
- Boundary Line
- Edge of Concrete
- Fence
- Top of Kerb
- GIS Sewer Line
- GIS Stormwater Line
- GIS Water Line

Note:
Levels are in terms of New Zealand Vertical Datum 2016

Origin of levels:
BM's: MA II DP 301992 (EHM3) & IT I DP 24439 (CNEJ)
RL's: 19.44m & 18.32m

Site benchmark:
MA II DP 580639
RL 18.83m
Flush in channel

Site Survey Lot 15 DP 580639

Scale	1:200 at A3
Date	28/04/2025
Client	Tiaan Kilian
Drawn	AL/ARD
Review	TA

Rev.	Date	Amendment
A	28/4/25	client issue

Revision A

Sheet 1 of 1

SDC - Approved Building Consent Document - BC250732 - Pg 2 of 40 - 6/06/2025 - sandea

SDC - Approved Building Consent Document - BC250732 - Pg 3 of 40 - 6/06/2025 - sandea

4 BEDROOM DWELLING

KELSEY & TIAAN KILIAN
93 CLAUSEN AVE, LEESTON

ANDERSON ARCHITECTURE

SHEET NO	SHEET NAME	REV NO.	REV DATE.
A01	SITE PLAN	None	
A02	DRAINGE PLAN	None	
A03	FOUNDATION PLAN	None	
B01	GROUND FLOOR PLAN	None	
B02	GROUND FLOOR BRACING PLAN	None	
B03	ROOF PLAN	None	
C01	ELEVATIONS	None	
C02	WINDOW SCHEDULE	None	
D01	CROSS SECTION	None	
D02	CROSS SECTION	None	
E01	PLUMBING LAYOUT	None	
E02	BATHROOM PLANS	None	
F01	DETAILS	None	
F02	DETAILS	None	
F03	DETAILS	None	
F04	DETAILS	None	
F05	DETAILS	None	
F06	DETAILS	None	
F07	DETAILS	None	
F08	DETAILS	None	
F09	DETAILS	None	
F10	DETAILS	None	
F11	DETAILS	None	
F12	DETAILS	None	
F13	DETAILS	None	
F14	DETAILS	None	
F15	DETAILS	None	

andersonarchitecture.co.nz // admin@andersonarchitecture.co.nz // 03 578 1448 // 027 823 7790

SDC - Approved Building Consent Document - BC250732 - Pg 4 of 40 - 6/06/2025 - sandea

Planning Approved

6/06/2025 sandea

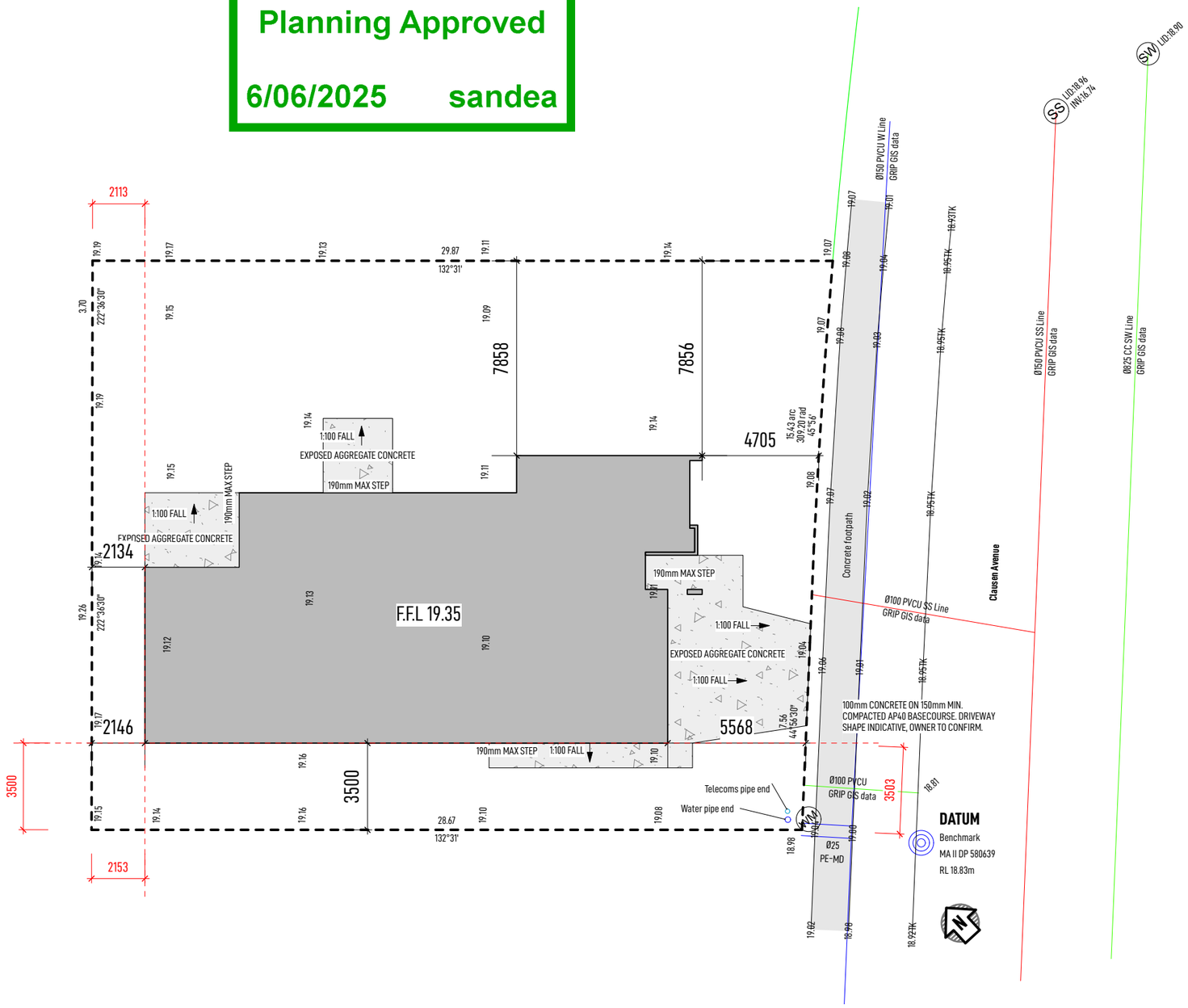

Legal Description

Lot 15 DP 580639
Site Area: 670m²

Planning

Area for Coverage: 267.5m²
Coverage: 39.92%

Notes:

Wind Zone: HIGH
Earthquake Zone: 2
Snow Zone: N4 50m
Corrosion Zone: C

SITE LEGEND

F.F.L.	FINISHED FLOOR LEVEL
GL	GROUND LEVEL
EL	EXISTING LEVEL
PL	PROPOSED LEVEL
LID	LID LEVEL
INV	INVERT LEVEL
DP	DOWNPIPE

TEMPORARY CONSTRUCTION BARRIERS:
-SHALL BE FENCES THAT EXTEND AT LEAST 2.0m IN HEIGHT FROM GROUND LEVEL
-BE GALVANISED CHAINLINK NETTING HAVING A MAXIMUM SIZED GRID OF 50 X 50mm.
-POST SPACING SHALL BE A MAXIMUM OF 2.5m, AND THE GAP BETWEEN THE BOTTOM OF THE FENCE AND GROUND NO GREATER THAN 100mm
-HAVE LOCKABLE GATES
SPOT HEIGHTS AND COUNCIL CONNECTIONS PRELIMINARY ONLY, LOCATIONS TO BE CONFIRMED ON SITE

CONSENT PLANS

ANDERSON ARCHITECTURE
andersonarchitecture.co.nz
03 578 1448 // 027 823 7790

ALL MEASUREMENTS TO BE CONFIRMED ON SITE BY THE CONTRACTOR PRIOR TO THE COMMENCEMENT OF WORK

© Anderson Architecture. All rights reserved. No part of this work covered by copyright may be reproduced or copied in any form or by any means without the written permission of Anderson Architecture.

4 BEDROOM DWELLING
KELSEY & TIAAN KILIAN
93 CLAUSEN AVE, LEESTON

SITE PLAN

SCALE: 1:200	DRAWN: JASON	DATE: 1-04-2025

REV	DATE	AMENDMENT	JOB NO: 25103	
			DWG NO: A01	REV

SDC - Approved Building Consent Document - BC250732 - Pg 5 of 40 - 6/06/2025 - sandea

FOUL WATER/SANITARY PLUMBING

SANITARY DRAINAGE SYSTEM TO NEW ZEALAND BUILDING CODE CLAUSE G13/AS1 (FOUL WATER)

FIXTURE DISCHARGE PIPE SIZES AND GRADIENT		
SANITARY FIXTURE OR APPLIANCE	DISCHARGE PIPE (mm)	MINIMUM GRADIENT
Basin/Vanity	40ø	1:40
Bathtub	40ø	1:40
Shower	40ø	1:40
Water Closet Pan	100ø	1:40
Kitchen Sink	50ø	1:40
Laundry Tub	50ø	1:40

SERVICES LEGEND

—·—S—·— SEWER LINE
— — —SW— — — STORMWATER LINE

DP	DOWNPIPE
GL	GROUND LEVEL
GT	GULLEY TRAP
INV	INVERT LEVEL
IP	INSPECTION POINT
LID	LID LEVEL

SITE LEGEND

F.F.L.	**FINISHED FLOOR LEVEL**
GL	**GROUND LEVEL**
EL	**EXISTING LEVEL**
PL	**PROPOSED LEVEL**
LID	**LID LEVEL**
INV	**INVERT LEVEL**
DP	**DOWNPIPE**

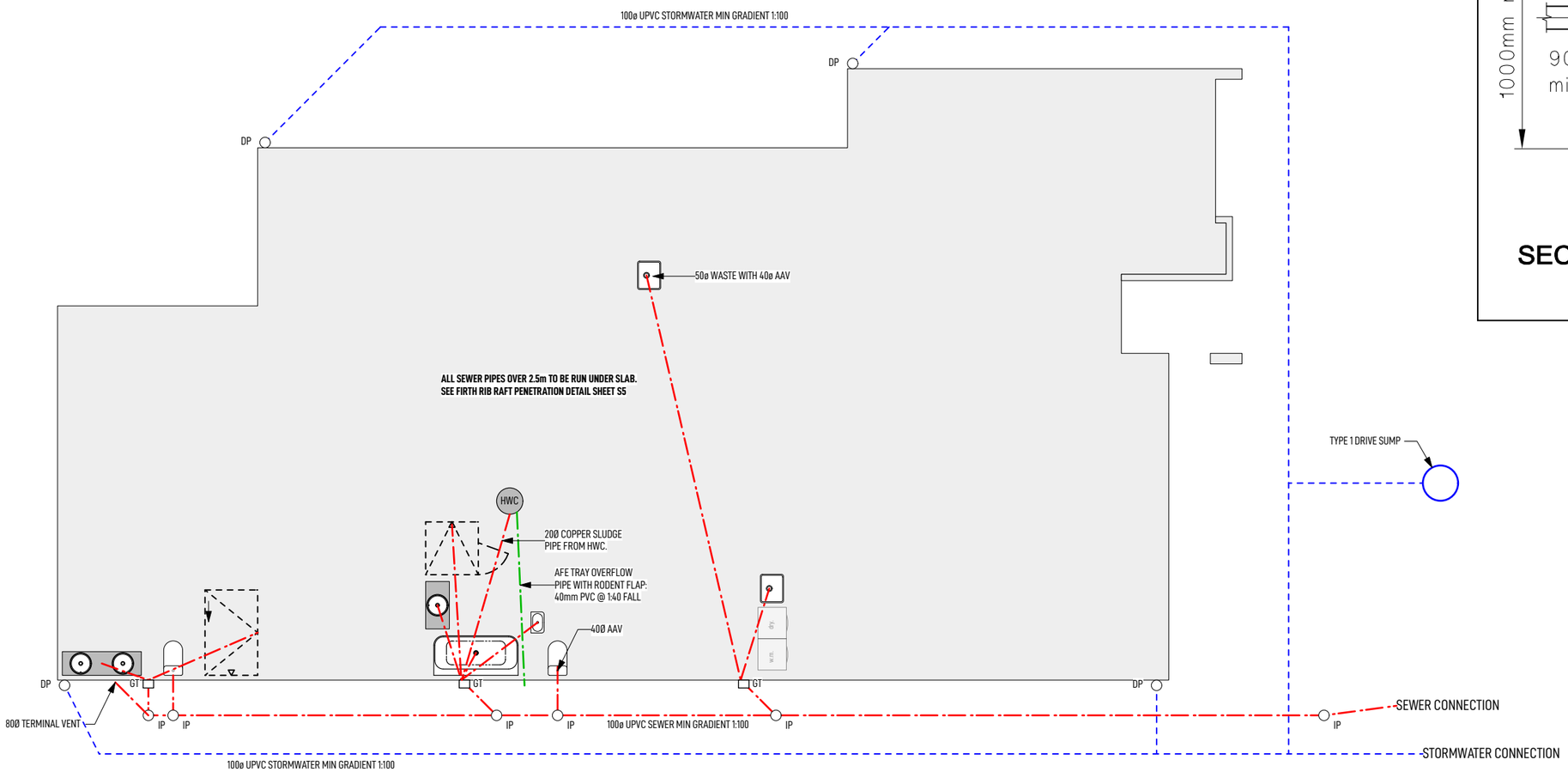

DRAINAGE PLAN 1:100

SEE BATHROOM PLANS FOR WASTE DIMENSIONS

Figure 8: Type-one Surface Water Sump
Paragraph 3.6.2

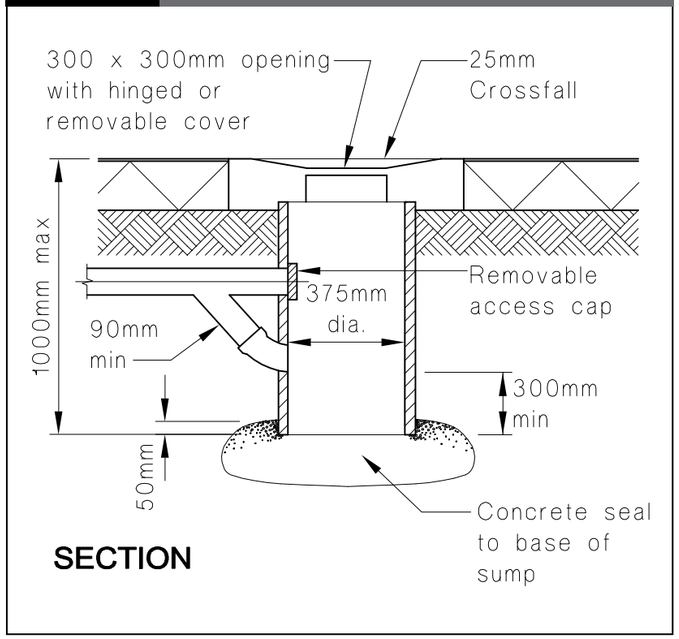

CONSENT PLANS

ANDERSON ARCHITECTURE
andersonarchitecture.co.nz
03 578 1448 // 027 823 7790

ALL MEASUREMENTS TO BE CONFIRMED ON SITE BY THE CONTRACTOR PRIOR TO THE COMMENCEMENT OF WORK

© Anderson Architecture. All rights reserved. No part of this work covered by copyright may be reproduced or copied in any form or by any means without the written permission of Anderson Architecture.

4 BEDROOM DWELLING
KELSEY & TIAAN KILIAN
93 CLAUSEN AVE, LEESTON

DRAINGE PLAN

SCALE: 1:100	DRAWN: JASON	DATE: 1-04-2025

REV	DATE	AMENDMENT	JOB NO: 25103	
			DWG NO: A02	REV

SDC - Approved Building Consent Document - BC250732 - Pg 6 of 40 - 6/06/2025 - sandea

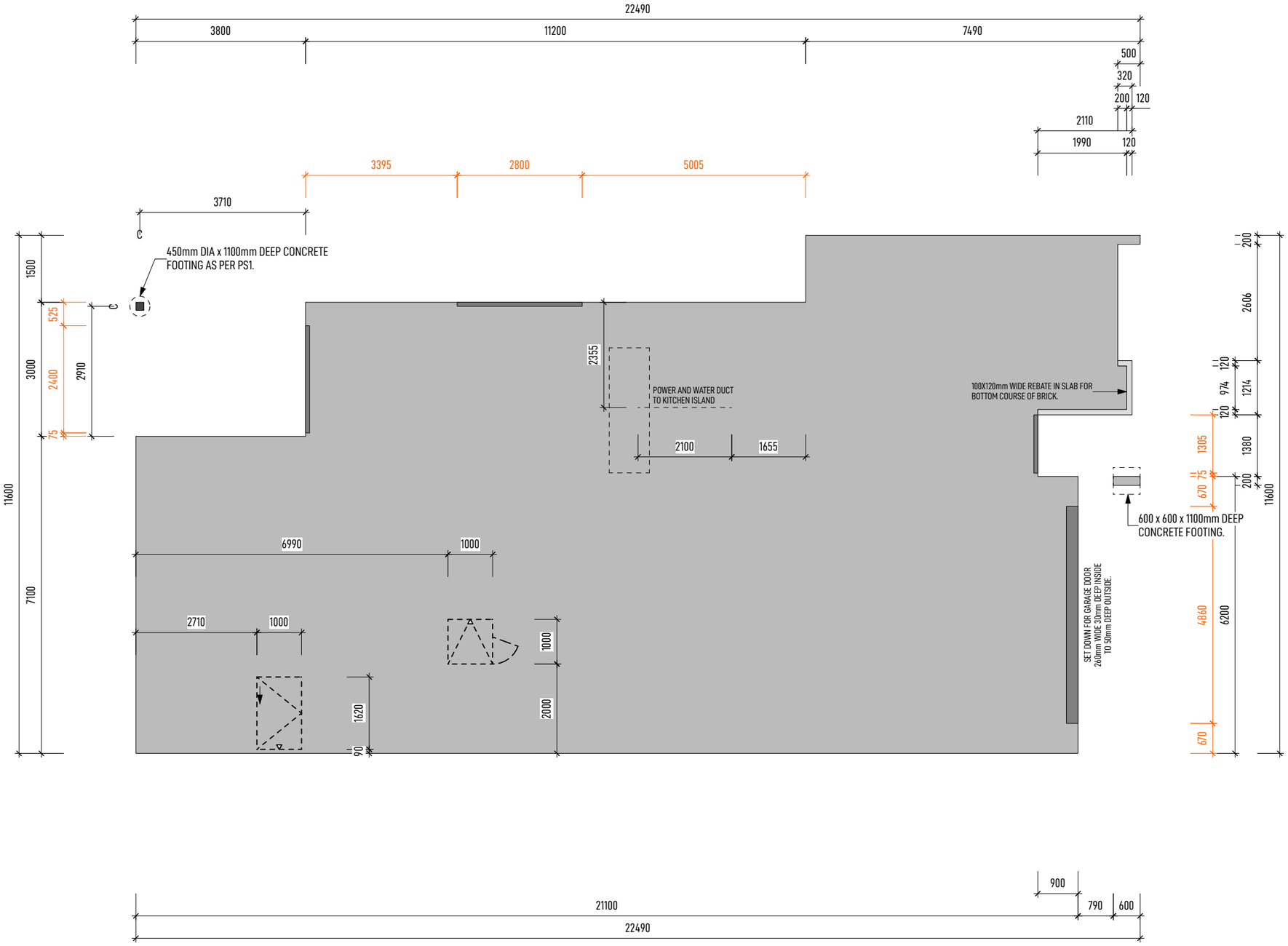

NOTES

DIMENSIONS

ALL DIMENSIONS ARE SHOWN TO FRAMING UNLESS OTHERWISE STATED. ALLOW FOR 6mm FRAMING OVERHANG WHEN SETTING OUT FLOOR SLAB.

KITCHEN DESIGN

KITCHEN DESIGN SHALL BE IN ACCORDANCE WITH SEPARATE KITCHEN PLANS. CONFIRM POSITION OF WASTE PIPES PRIOR TO POURING THE FLOOR SLAB.

LEGAL:

SHOULD THERE BE ANY OMISSION, DOUBT OR AMBIGUITY AS TO THE MEANING OF ANY PART TO THE DRAWINGS AND SPECIFICATIONS, CONTACT THE DESIGNER BEFORE CONTINUING FURTHER WORK.

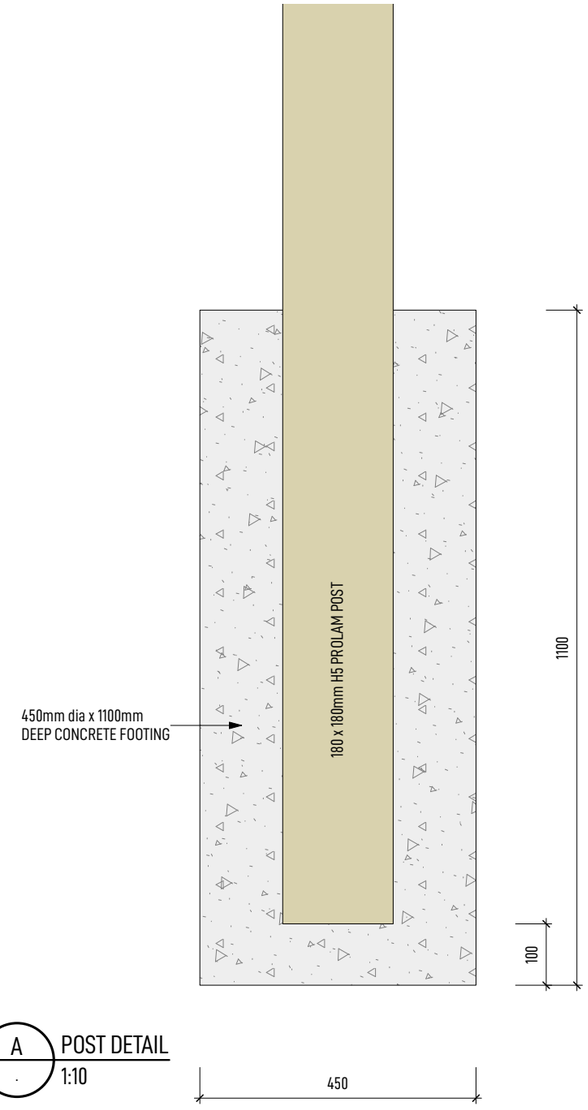

A POST DETAIL
1:10

CONSENT PLANS

ANDERSON ARCHITECTURE
andersonarchitecture.co.nz
03 578 1448 // 027 823 7790

ALL MEASUREMENTS TO BE CONFIRMED ON SITE BY THE CONTRACTOR PRIOR TO THE COMMENCEMENT OF WORK

© Anderson Architecture. All rights reserved. No part of this work covered by copyright may be reproduced or copied in any form or by any means without the written permission of Anderson Architecture.

4 BEDROOM DWELLING

KELSEY & TIAAN KILIAN

93 CLAUSEN AVE, LEESTON

FOUNDATION PLAN

SCALE: 1:100	DRAWN: JASON	DATE: 1-04-2025

REV	DATE	AMENDMENT	JOB NO:	
			25103	
			DWG NO:	REV
			A03	

HOT WATER CYLINDER

SOLAR READY ELECTRIC HOT WATER CYLINDER COMPLETE WITH PRESSURE REDUCING & RELIEF VALVES & TEMPERING VALVE 20Ø COPPER SLUDGE PIPE TO DISCHARGE OVER THE NEAREST GULLY TRAP. SECURE WITH SEISMIC RESTRAINTS AS PER ACCEPTABLE SOLUTION G12/AS1 (WATER SUPPLIES) FIGURE 14.

WET AREAS WALL LININGS

WET AREAS WALL LININGS FINISHED WITH SEMI-GLOSS, OR GLOSS PAINT. AS PER ACCEPTABLE SOLUTION E3/AS1 3.1.2 WALLS (f).

BATH TO HAVE 150mm HIGH CERAMIC OR STONE TILE SURROUND HAVING 6% MAXIMUM WATER ABSORPTION, WATERPROOF GROUTED JOINTS, AND BEDDED WITH AN ADHESIVE SPECIFIED BY THE TILE MANUFACTURER AS BEING SUITABLE FOR THE TILES, SUBSTRATE MATERIAL AND THE ENVIRONMENT OF USE.

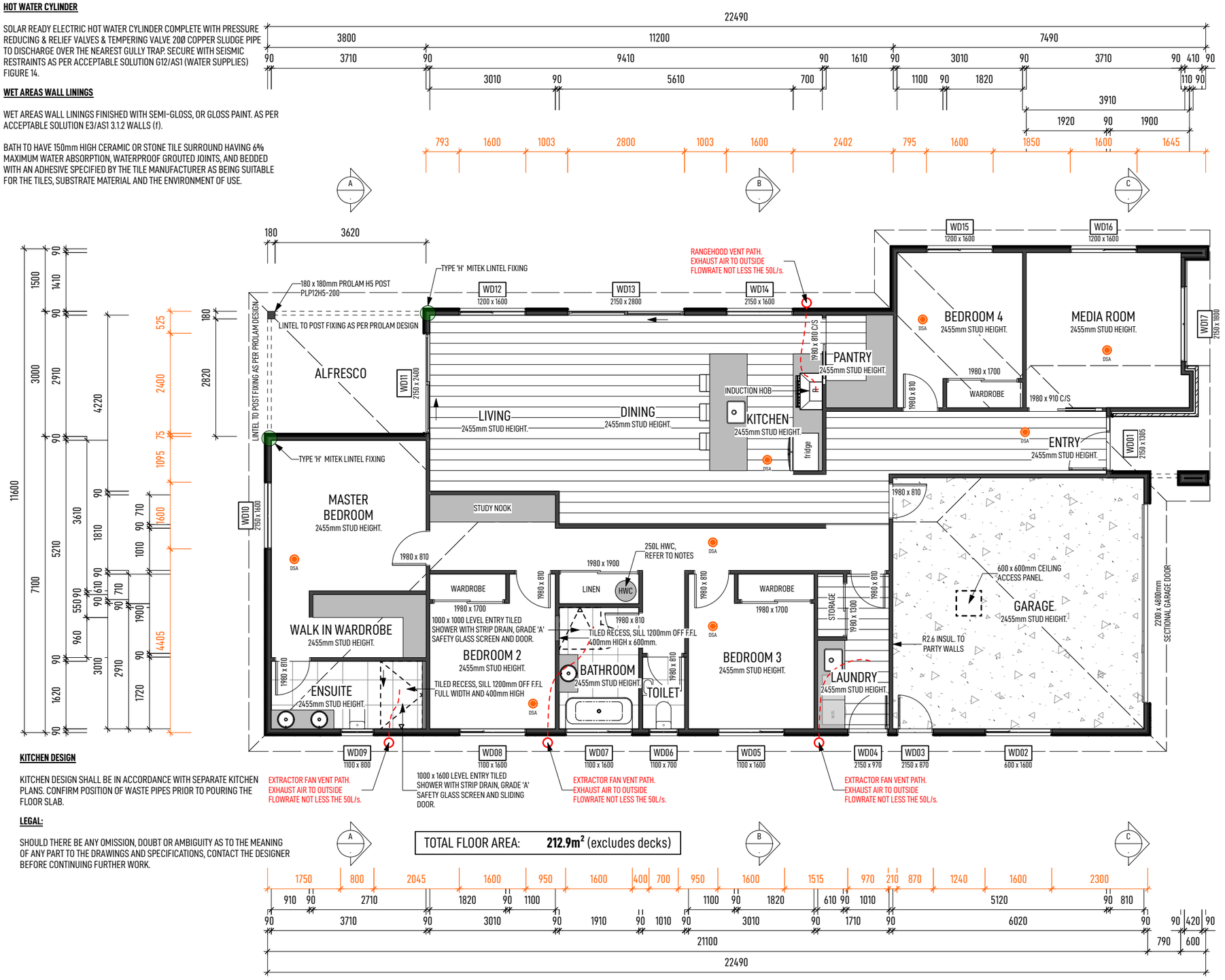

KITCHEN DESIGN

KITCHEN DESIGN SHALL BE IN ACCORDANCE WITH SEPARATE KITCHEN PLANS. CONFIRM POSITION OF WASTE PIPES PRIOR TO POURING THE FLOOR SLAB.

LEGAL:

SHOULD THERE BE ANY OMISSION, DOUBT OR AMBIGUITY AS TO THE MEANING OF ANY PART TO THE DRAWINGS AND SPECIFICATIONS, CONTACT THE DESIGNER BEFORE CONTINUING FURTHER WORK.

TOTAL FLOOR AREA: **212.9m²** (excludes decks)

NOTES

DIMENSIONS

ALL DIMENSIONS ARE TO FRAMING UNLESS OTHERWISE STATED.

LEGEND

DSA — DOMESTIC SMOKE ALARM COMPLYING WITH ANY OF THE FOLLOWING STANDARDS, NZS4514:2021, BS EN 14604, AS3786M UL 217, CAN/ULC S531 OR ISO 12239 TO BE INTERCONNECTED.

'TYPE G' = LINTEL FIXING TYPE
140 x 90 = LINTEL SIZE
1400 x 1800 = OPENING SIZE (H x W)

NAILPLATE TRUSSES

TRUSS MANUFACTURER SHALL PROVIDE A PRODUCER STATEMENT PRIOR TO FABRICATION

TIMBER FRAMING

UNLESS OTHERWISE STATED ALL WALLS TO BE FRAMED WITH 90 x 45 SG8 STUDS. ALL WALL FRAMING SHALL BE PRESERVATIVE TREATED H1.2

SIMILARLY, UNLESS OTHERWISE STATED ALL OTHER FRAMING TIMBER (INCLUDING FLOOR, ROOF, DECK, ETC.) SHALL HAVE A MINIMUM GRADE OF SG8

LINTELS

ALL LINTELS AND BEAMS TO BE SG8 AND SHALL BE PRESERVATIVE TREATED "H1.2" UNLESS OTHERWISE SHOWN

FOR PREVENTION OF UPLIFT REFER TO "MITEK LUMBERLOK" LINTEL FIXING SCHEDULE FOR LINTEL FIXING "TYPE" DEFINITIONS

ALL LINTELS AND BEAMS TO BE DESIGNED IN ACCORDANCE WITH ROOF TRUSS DESIGN MANUFACTURER

LINTEL DESIGN CERTIFICATE AND TRUSS DESIGN CERTIFICATED TO BE PROVIDED PRIOR TO MANUFACTURE

RECESSED DOWNLIGHTS

ALL RECESSED LUMINAIRES TO BE I.C.A. RATED

FLOOR COVERING LEGEND:

- CARPET
- TILES
- VINYL PLANK
- CONCRETE

SDC - Approved Building Consent Document - BC250732 - Pg 7 of 40 - 6/06/2025 - sandea

CONSENT PLANS

ANDERSON ARCHITECTURE
andersonarchitecture.co.nz
03 578 1448 // 027 823 7790

ALL MEASUREMENTS TO BE CONFIRMED ON SITE BY THE CONTRACTOR PRIOR TO THE COMMENCEMENT OF WORK

© Anderson Architecture. All rights reserved. No part of this work covered by copyright may be reproduced or copied in any form or by any means without the written permission of Anderson Architecture.

4 BEDROOM DWELLING

KELSEY & TIAAN KILIAN

93 CLAUSEN AVE, LEESTON

GROUND FLOOR PLAN

SCALE: 1:100	DRAWN: JASON	DATE: 1-04-2025

REV	DATE	AMENDMENT	JOB NO: 25103	
			DWG NO: B01	REV

SDC - Approved Building Consent Document - BC250732 - Pg 8 of 40 - 6/06/2025 - sandea

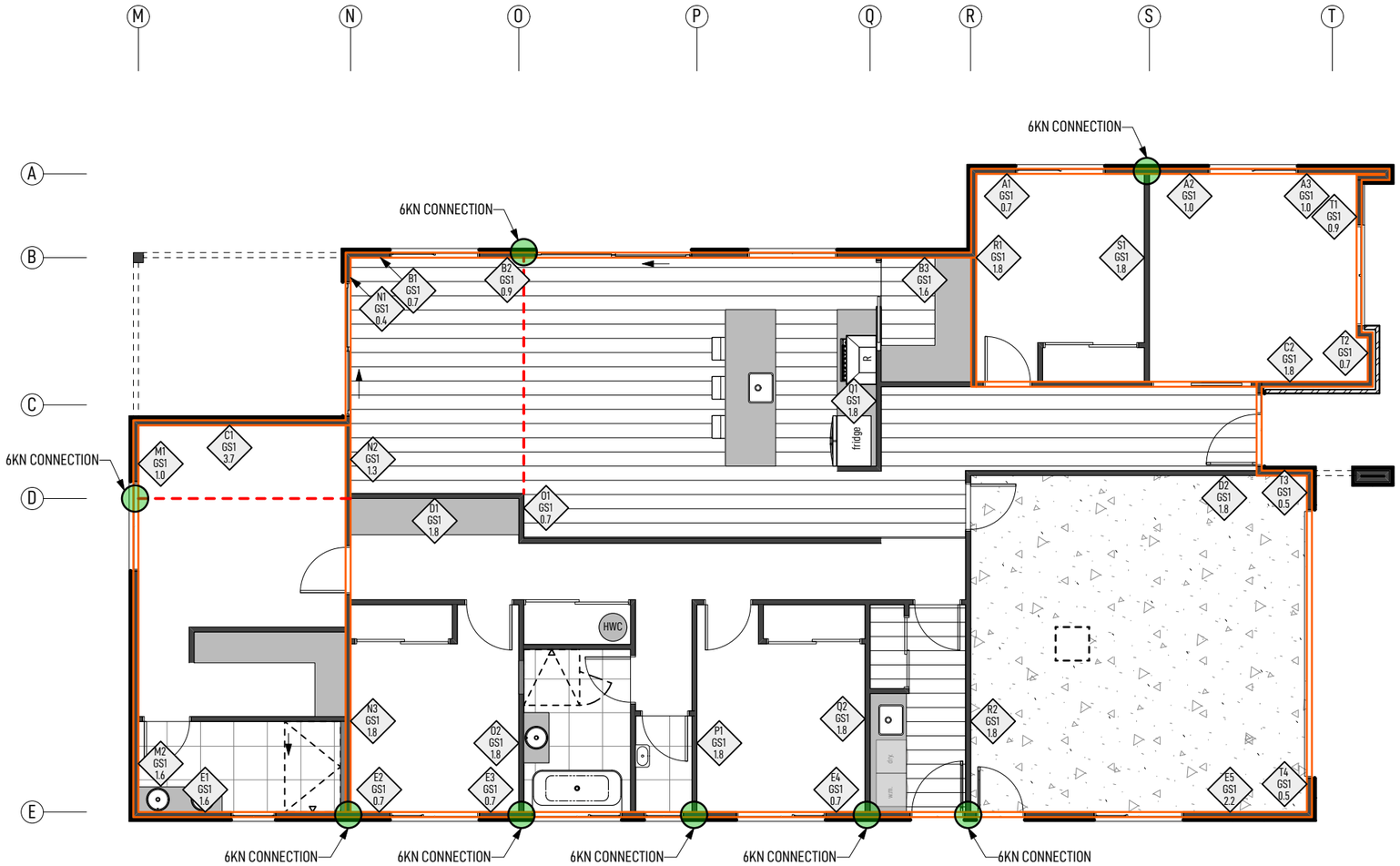

STUD TO TOP PLATE FIXING LEGEND

LUMBERLOK STUD TO TOP PLATE FIXING TYPE "B"

NOTE: TYPE "B" LUMBERLOK STUD TO TOP PLATE FIXINGS SHOWN AS HATCHED WITH ALL OTHER STUD TO TOP PLATE FIXINGS TYPE "A" IN ACCORDANCE WITH TRUSS MANUFACTURERS PRODUCER STATEMENT.

140x35 'H1.2 SG8 CEILING TIE WITH 6kN CONNECTION AT EXTERNAL WALLS

NOTES

BRACING NOTES

A1 GS1A 2.4 — BRACING No. / BRACE TYPE / BRACE LENGTH (m)

BRACED PANELS SHALL BE CONSTRUCTED TO COMPLY WITH RELEVANT "BRANZ" APPRAISAL CERTIFICATES.

REFER TO THE BRACING CALCULATIONS AND DETAILS FOR FURTHER BRACING INFORMATION.

DIMENSIONS

ALL DIMENSIONS ARE TO FRAMING UNLESS OTHERWISE STATED.

TYPE A
0.7kN

2/90x3.15mm DIA. PLAIN STEEL WIRE NAILS DRIVEN VERTICALLY INTO STUD.

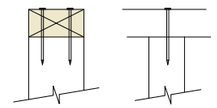

TYPE B
4.7kN

CHOOSE ANY OF THE 3 OPTIONS BELOW

2/90x3.15mm DIA. PLAIN STEEL WIRE NAILS DRIVEN VERTICALLY INTO STUD PLUS ONE LUMBERLOK 6kN STUD ANCHOR (CPC80).

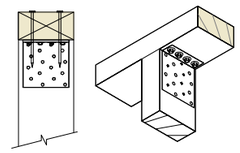

2/90x3.15mm DIA. PLAIN STEEL WIRE NAILS DRIVEN VERTICALLY INTO STUD PLUS TWO LUMBERLOK CPC40.

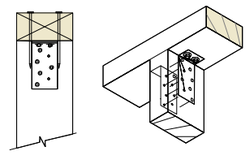

RECOMMENDED FOR INTERNAL WALL OPTIONS TO AVOID LINING ISSUES

2/90x3.15mm DIA. PLAIN STEEL WIRE NAILS DRIVEN VERTICALLY INTO STUD PLUS LUMBERLOK STUD STRAP (ONE FACE ONLY).

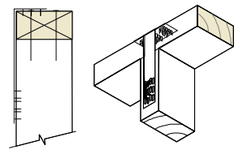

LUMBERLOK STUD TO TOP PLATE FIXING TYPE "B" - 1.7kN

A
.
LUMBERLOK STUD TO TOP PLATE FIXINGS
1:10

CONSENT PLANS

ANDERSON ARCHITECTURE
andersonarchitecture.co.nz
03 578 1448 // 027 823 7790

ALL MEASUREMENTS TO BE CONFIRMED ON SITE BY THE CONTRACTOR PRIOR TO THE COMMENCEMENT OF WORK

© Anderson Architecture. All rights reserved. No part of this work covered by copyright may be reproduced or copied in any form or by any means without the written permission of Anderson Architecture.

4 BEDROOM DWELLING
KELSEY & TIAAN KILIAN
93 CLAUSEN AVE, LEESTON

GROUND FLOOR BRACING PLAN

SCALE: 1:100	DRAWN: JASON	DATE: 1-04-2025

REV	DATE	AMENDMENT	JOB NO: 25103	
			DWG NO: B02	REV

SDC - Approved Building Consent Document - BC250732 - Pg 9 of 40 - 6/06/2025 - sandea

NOTES

DIMENSIONS

ALL DIMENSIONS ARE TO FRAMING UNLESS OTHERWISE STATED.

LEGAL:

SHOULD THERE BE ANY OMISSION, DOUBT OR AMBIGUITY AS TO THE MEANING OF ANY PART TO THE DRAWINGS AND SPECIFICATIONS, CONTACT THE DESIGNER BEFORE CONTINUING FURTHER WORK.

DOWNPIPE CALCULATIONS

ROOF PLAN AREA: 267.5m²
ROOF PITCH: 30°

MAXIMUM ROOF PLAN AREA PER 80Ø DOWNPIPE TO COMPLY WITH THE NEW ZEALAND BUILDING CODE - E1/AS1 = 70m²

$\frac{267.5m^2}{70m^2}$ = 4 - 80Ø DOWNPIPES (MIN)

4.1.1 HIGH WIND ZONE - 0.4mm BMT CORRUGATED "COLORSTEEL " ROOFING FIXED OVER SELF SUPPORTING ROOF UNDERLAY TO 70x45mm "H1.2" SG8 PURLINS @ 900mm MAX.
CRS (600mm CRS @ RIDGE & GUTTER). PURLINS CONNECTED TO TRUSSES/RAFTERS WITH 1/10g SELF DRILLING SCREW 80mm MINIMUM LONG (2.4kN FIXING CAPACITY). ROOFING FIXED WITH "C2" FIXING PATTERN AS PER NZBC E2/AS1 TABLE 11 (C2 FIXING PATTERN IS - HIT 1, MISS 1, HIT 1, MISS 2...).
90 x 45mm SG8 OUTRIGGERS AT 900mm MAX CRS FIXED TO FRAMING WITH 2/90x3.15mm GUN NAILS.

4.1.2 SELECTED COLOURSTEEL QUARTER ROUND GUTTER & FASCIA SYSTEM

4.1.3 MIN 74mmØ (INT) COLORSTEEL DOWNPIPE

4.1.4 2x25x1mm M/S STRAP BRACE WITH TENSIONERS

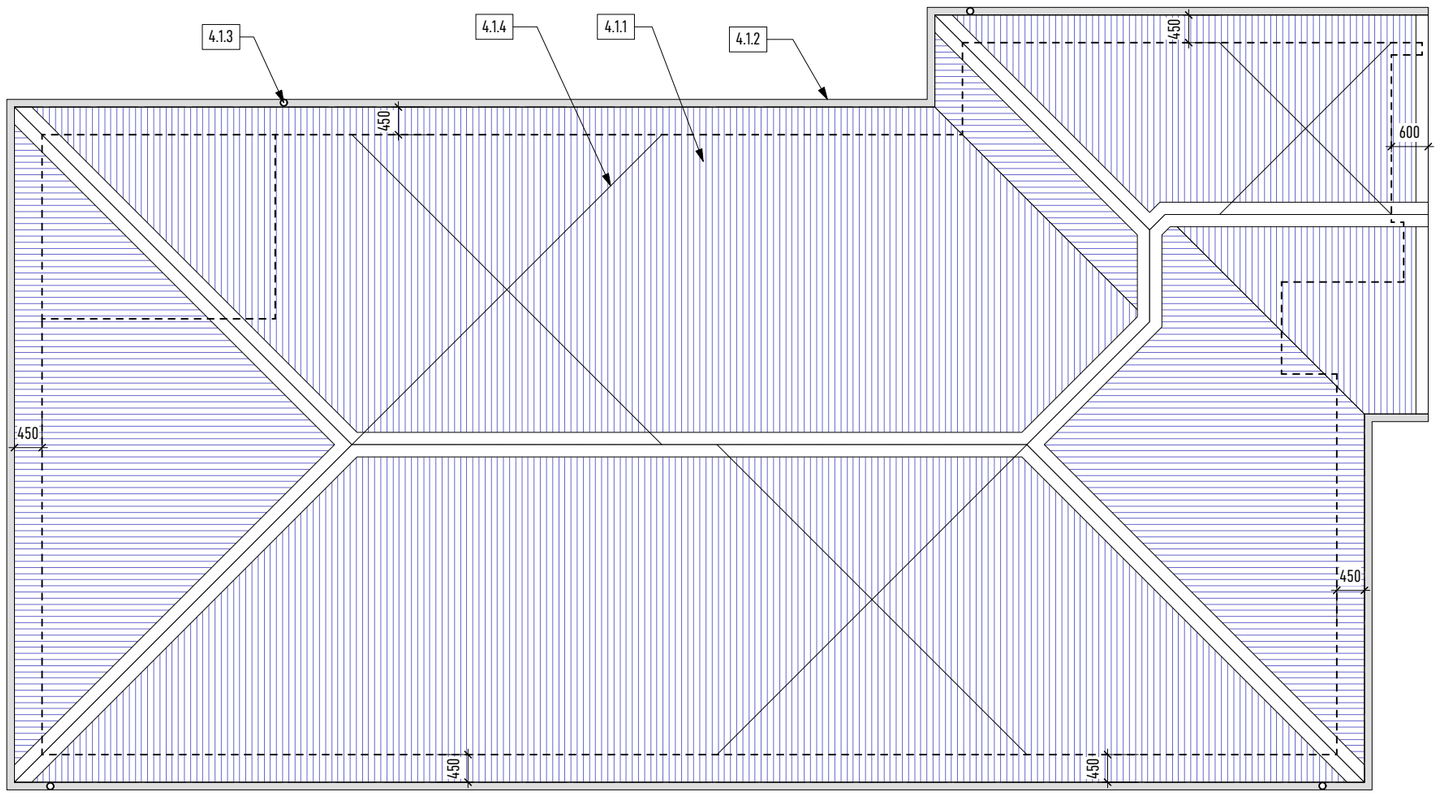

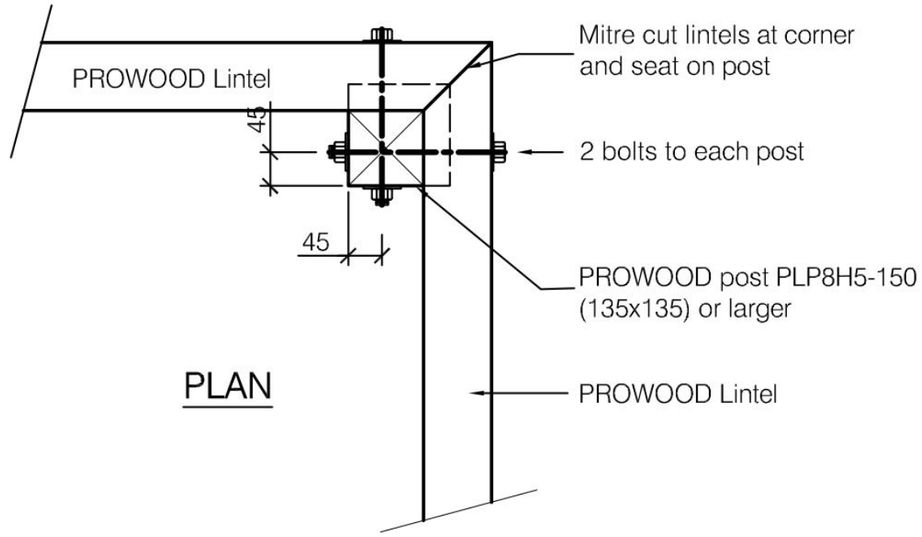

PLAN

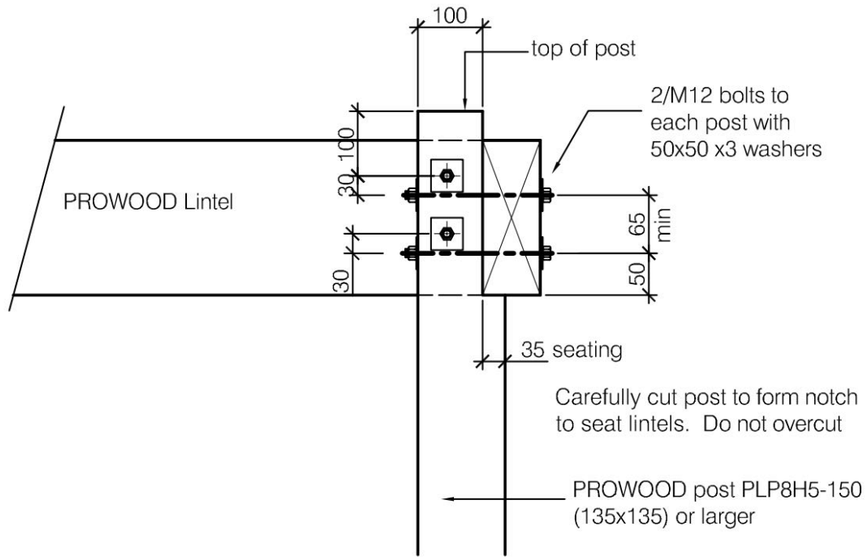

ELEVATION

Characteristic Capacities for uplift (2/M12 bolts)
14.0 kN - dry (sheltered) use
9.8 kN - wet (exposed) use

CONSENT PLANS

ANDERSON ARCHITECTURE
andersonarchitecture.co.nz
03 578 1448 // 027 823 7790

ALL MEASUREMENTS TO BE CONFIRMED ON SITE BY THE CONTRACTOR PRIOR TO THE COMMENCEMENT OF WORK

© Anderson Architecture. All rights reserved. No part of this work covered by copyright may be reproduced or copied in any form or by any means without the written permission of Anderson Architecture.

4 BEDROOM DWELLING
KELSEY & TIAAN KILIAN
93 CLAUSEN AVE, LEESTON

ROOF PLAN

SCALE: 1:100	DRAWN: JASON	DATE: 1-04-2025

REV	DATE	AMENDMENT	JOB NO: 25103	
			DWG NO: B03	REV

SDC - Approved Building Consent Document - BC250732 - Pg 10 of 40 - 6/06/2025 - sandea

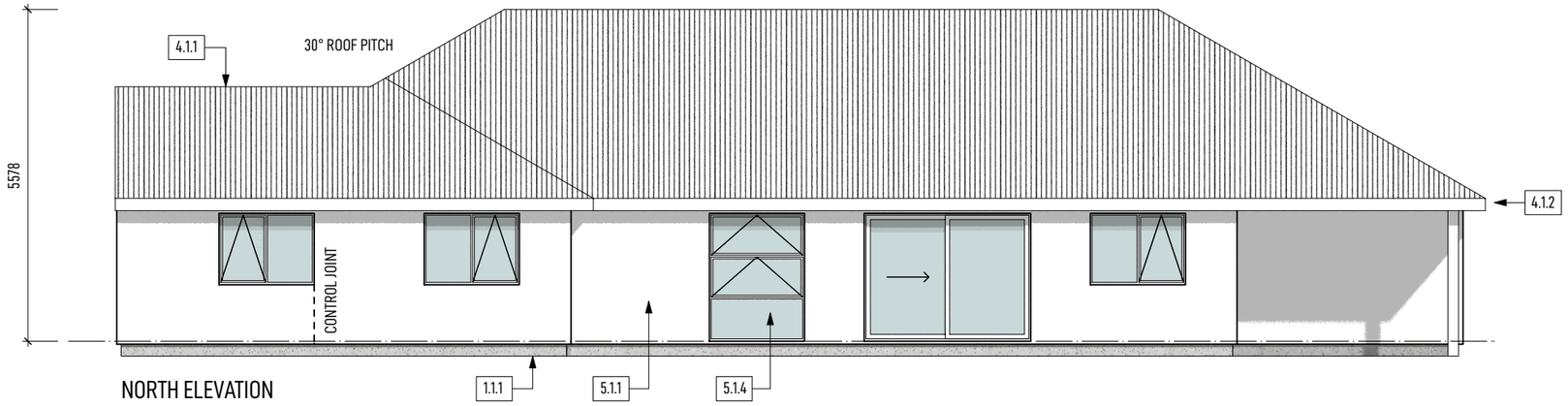

NORTH ELEVATION

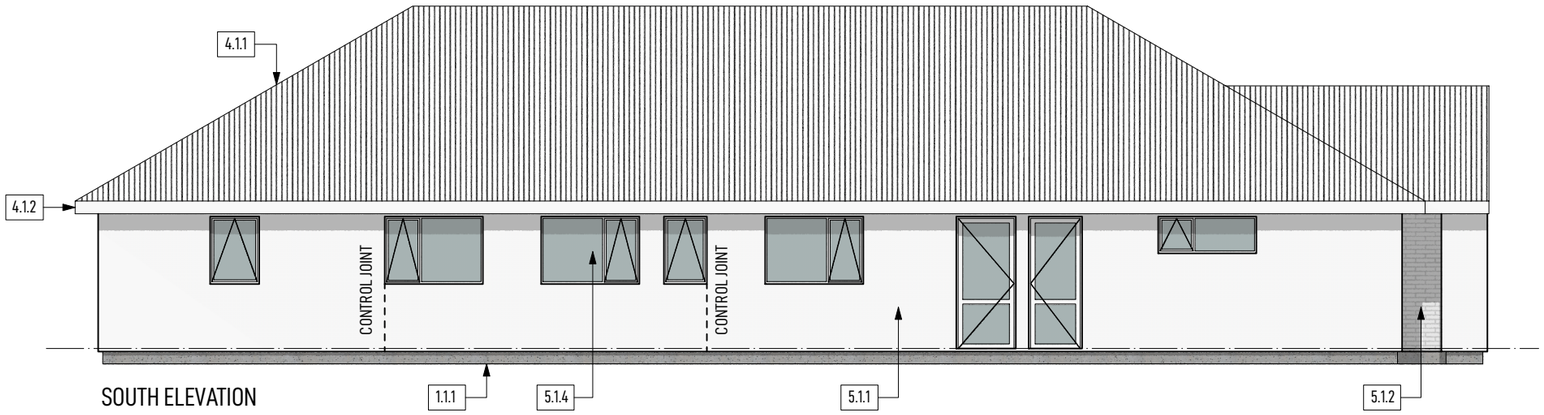

SOUTH ELEVATION

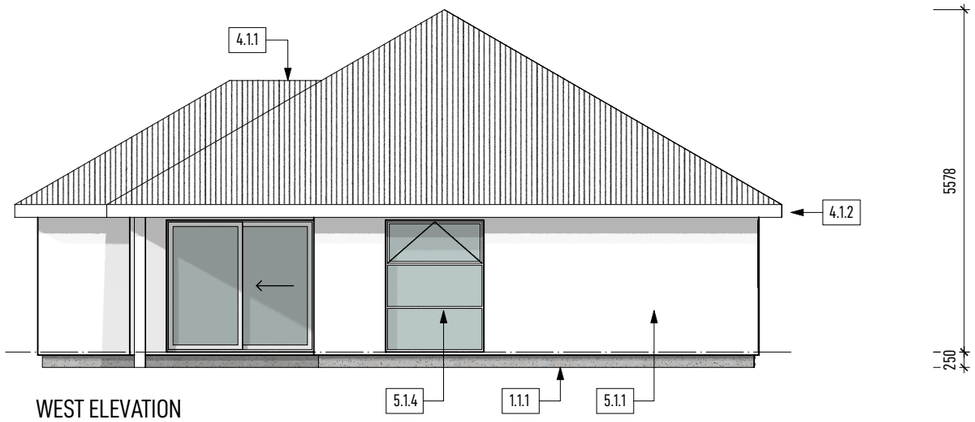

WEST ELEVATION

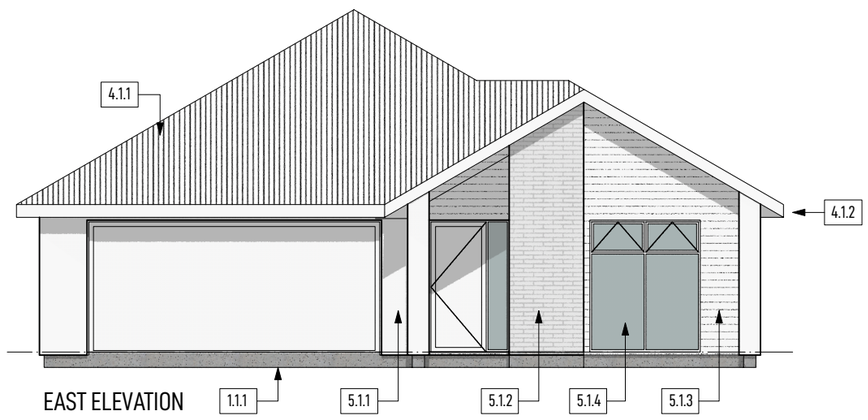

EAST ELEVATION

NOTES

ROOF BRACING

ALL GABLE ROOFS SHALL HAVE 1 PAIR OF DIAGONALLY OPPOSED 25 x 0.6mm GALVANISED MILD STEEL STRAPS WITH 8kN TENSIONER FOR EVERY 50m² - REFER TO SPECS FOR DETAILS

LEGAL:

SHOULD THERE BE ANY OMISSION, DOUBT OR AMBIGUITY AS TO THE MEANING OF ANY PART TO THE DRAWINGS AND SPECIFICATIONS, CONTACT THE DESIGNER BEFORE CONTINUING FURTHER WORK.

RISK MATRIX - ALL FACES					
RISK FACTOR	LOW	MED	HIGH	V H	S T
Wind (NZS 3604)	0	0	1	2	1
Storeys	0	1	2	4	0
R/W Intersection	0	1	3	5	0
Eaves Width	0	1	2	5	5
Complexity	0	1	3	6	1
Deck Design	0	2	4	6	0
TOTAL RISK SCORE					7

1.1.1 RIB RAFT SLAB FLOOR SYSTEM DESIGNED BY ENGINEERS

4.1.1 HIGH WIND ZONE - 0.4mm BMT CORRUGATED "COLORSTEEL " ROOFING FIXED OVER SELF SUPPORTING ROOF UNDERLAY TO 70x45mm "H1.2" SG8 PURLINS @ 900mm MAX.
CRS (600mm CRS @ RIDGE & GUTTER). PURLINS CONNECTED TO TRUSSES/RAFTERS WITH 1/10g SELF DRILLING SCREW 80mm MINIMUM LONG (2.4kN FIXING CAPACITY). ROOFING FIXED WITH "C2" FIXING PATTERN AS PER NZBC E2/AS1 TABLE 11 (C2 FIXING PATTERN IS - HIT 1, MISS 1, HIT 1, MISS 2...).
90 x 45mm SG8 OUTRIGGERS AT 900mm MAX CRS FIXED TO FRAMING WITH 2/90x3.15mm GUN NAILS.

4.1.2 SELECTED COLOURSTEEL QUARTER ROUND GUTTER & FASCIA SYSTEM

4.1.3 MIN 74mmØ (INT) COLORSTEEL DOWNPIPE

4.1.4 2x25x1mm M/S STRAP BRACE WITH TENSIONERS

5.1.1 ROCKCOTE EPS CAVITY PLUS RENDER SYSTEM APPLIED OVER 50mm GRAPHEX POLYSTYRENE SHEET SUBSTRATE FIXED THROUGH 40x22mm POLYSTYRENE CAVITY BATTENS (AS1366 PART 3 CLASS H) AND BUILDING WRAP TO WALL FRAMING FRAMING WITH FLAT-HEAD, HOT-DIPPED GALVANISED NAILS AND ROCKCOTE 40mm DIAMETER NYLON WASHERS.

5.1.2 SELECTED 70 SERIES CLAY BRICK VENEER FIXED OVER BUILDING WRAP WITH GALV. (EM) SCREW FIX TIES @ 600mm MAX. CRS HORIZONTALLY & 400mm MAX. CRS. VERTICALLY. MAINTAIN 40mm MIN. CAVITY BETWEEN FRAMING & VENEER. BRICK TIES TO BE MINIMUM 470G/m² GALVANISING ON MILD STEEL.

5.1.3 180x16mm LINEA WEATHERBOARD TO 45x20mm "H3.1" BATTENS FIXED THROUGH SYNTHETIC BUILDING WRAP WITH 60x3.15mm HARDIFLEX NAILS FINISH FLUSH WITH BOARD SURFACE FOR CONCEALED NAILING OR 75x3.15mm HOT-DIPPED GALVANISED JOLT HEAD NAILS MAY BE DRIVEN THROUGH BOTH THICKNESSES AT BOARD LAP FOR FACE NAILING.

5.1.4 ALL POWDER COATED THERMALLY BROKEN ALUMINIUM JOINERY UNITS TO BE DOUBLE GLAZED LOW-E-XL WITH ARGON GAS AND SHALL COMPLY WITH NZS4223.

ANDERSON ARCHITECTURE
andersonarchitecture.co.nz
03 578 1448 // 027 823 7790

ALL MEASUREMENTS TO BE CONFIRMED ON SITE BY THE CONTRACTOR PRIOR TO THE COMMENCEMENT OF WORK

© Anderson Architecture. All rights reserved. No part of this work covered by copyright may be reproduced or copied in any form or by any means without the written permission of Anderson Architecture.

4 BEDROOM DWELLING
KELSEY & TIAAN KILIAN
93 CLAUSEN AVE, LEESTON

ELEVATIONS

SCALE: 1:100	DRAWN: JASON	DATE: 1-04-2025

CONSENT PLANS

REV	DATE	AMENDMENT	JOB NO: 25103	
			DWG NO: C01	REV

SDC - Approved Building Consent Document - BC250732 - Pg 11 of 40 - 6/06/2025 - sandea

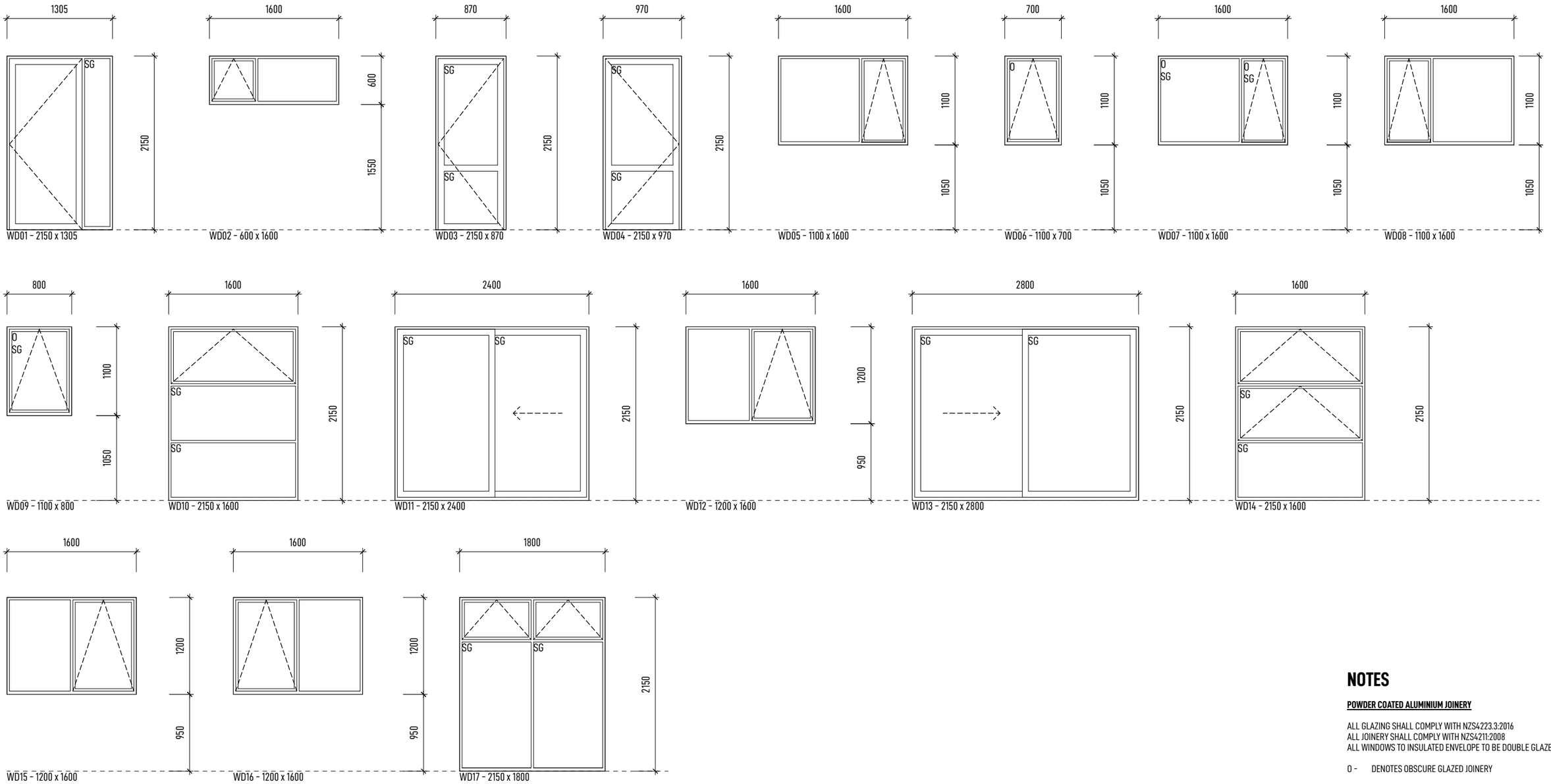

ALL WINDOW SIZES AND OPENINGS TO BE CONFIRMED ON SITE WITH JOINER.

NOTES

POWDER COATED ALUMINIUM JOINERY

ALL GLAZING SHALL COMPLY WITH NZS4223.3:2016
ALL JOINERY SHALL COMPLY WITH NZS4211:2008
ALL WINDOWS TO INSULATED ENVELOPE TO BE DOUBLE GLAZED

O - DENOTES OBSCURE GLAZED JOINERY

SG - DENOTES GRADE "A" SAFETY GLAZING (ALL HINGED DOOR PANELS > 0.5m² SHALL BE SAFETY GLAZED)

T - DENOTES INDIVIDUAL TINT GLAZED JOINERY UNITS

RS - DENOTES INDIVIDUAL JOINERY UNITS WITH SASHES FITTED WITH RESTRICTOR STAYS

LEGAL:

SHOULD THERE BE ANY OMISSION, DOUBT OR AMBIGUITY AS TO THE MEANING OF ANY PART TO THE DRAWINGS AND SPECIFICATIONS, CONTACT THE DESIGNER BEFORE CONTINUING FURTHER WORK.

CONSENT PLANS

ANDERSON ARCHITECTURE
andersonarchitecture.co.nz
03 578 1448 // 027 823 7790

ALL MEASUREMENTS TO BE CONFIRMED ON SITE BY THE CONTRACTOR PRIOR TO THE COMMENCEMENT OF WORK

© Anderson Architecture. All rights reserved. No part of this work covered by copyright may be reproduced or copied in any form or by any means without the written permission of Anderson Architecture.

4 BEDROOM DWELLING

KELSEY & TIAAN KILIAN

93 CLAUSEN AVE, LEESTON

WINDOW SCHEDULE

SCALE: 1:50	DRAWN: JASON	DATE: 1-04-2025

REV	DATE	AMENDMENT	JOB NO: 25103	
			DWG NO: C02	REV

SDC - Approved Building Consent Document - BC250732 - Pg 12 of 40 - 6/06/2025 - sandea

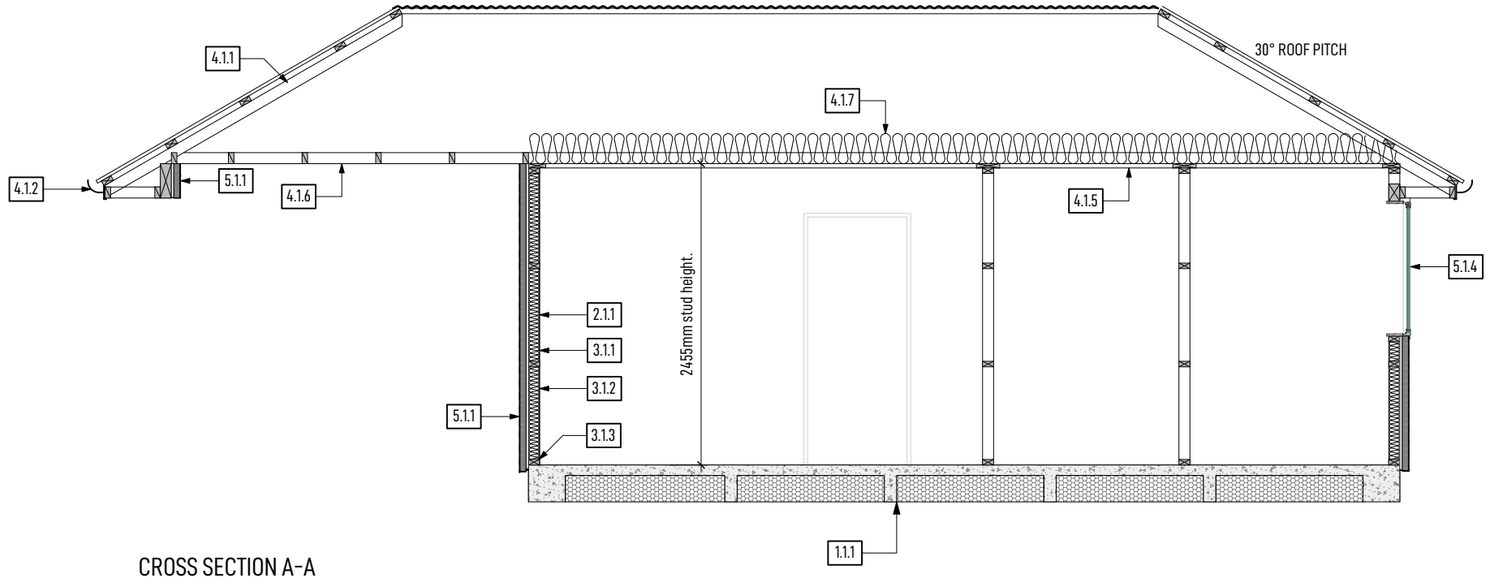

CROSS SECTION A-A

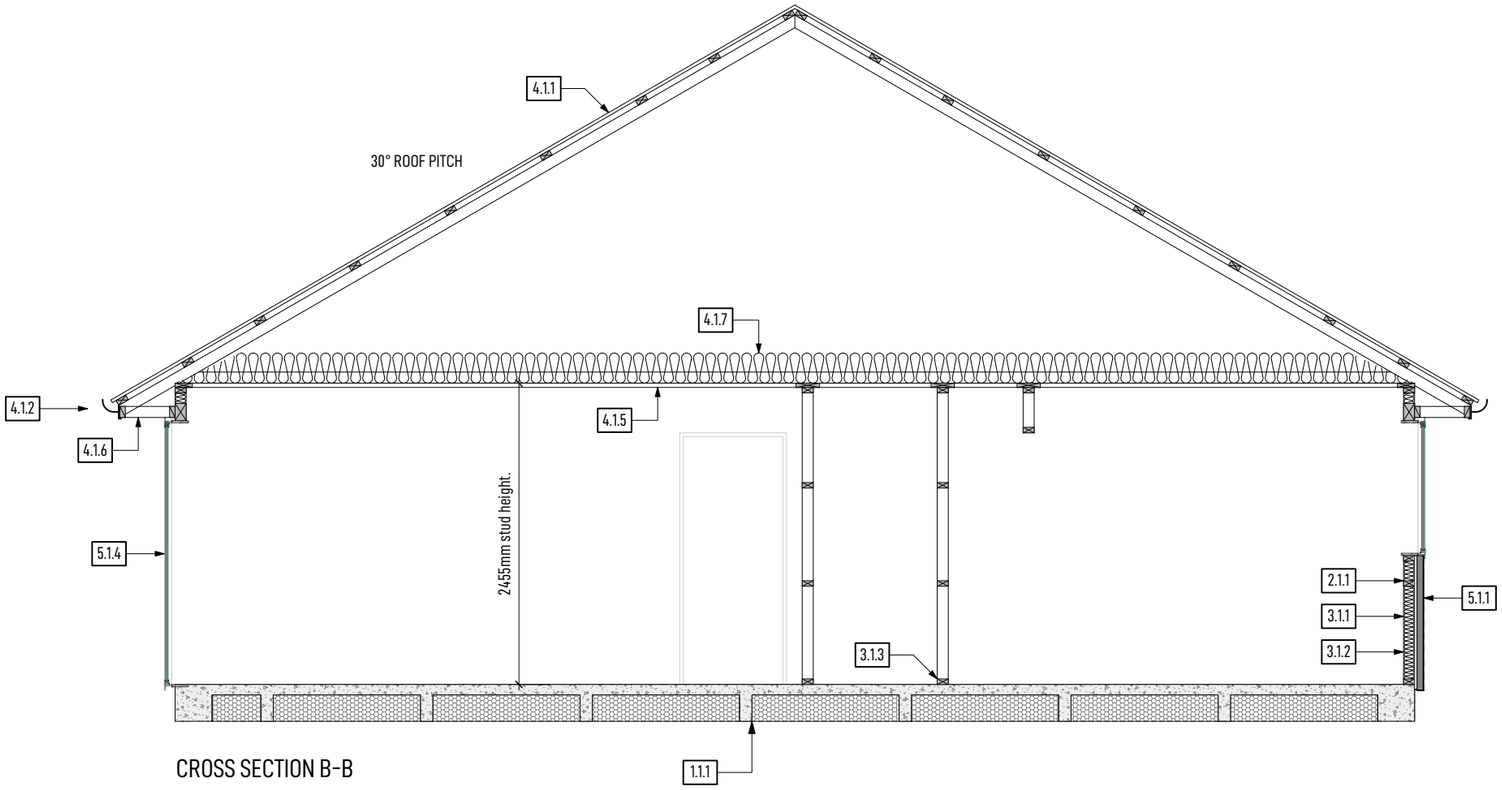

CROSS SECTION B-B

NOTES

NAILPLATE TRUSSES

TRUSS MANUFACTURER SHALL PROVIDE A PRODUCER STATEMENT PRIOR TO FABRICATION

TIMBER FRAMING

UNLESS OTHERWISE STATED ALL WALLS TO BE FRAMED WITH 90 x 45 SG8 STUDS. ALL WALL FRAMING SHALL BE PRESERVATIVE TREATED H1.2

SIMILARLY, UNLESS OTHERWISE STATED ALL OTHER FRAMING TIMBER (INCLUDING FLOOR, ROOF, DECK, ETC.) SHALL HAVE A MINIMUM GRADE OF SG8

LINTELS

ALL LINTELS AND BEAMS TO BE SG8 AND SHALL BE PRESERVATIVE TREATED "H1.2" UNLESS OTHERWISE SHOWN

FOR PREVENTION OF UPLIFT REFER TO "MITEK LUMBERLOK" LINTEL FIXING SCHEDULE FOR LINTEL FIXING "TYPE" DEFINITIONS

ALL LINTELS AND BEAMS TO BE DESIGNED IN ACCORDANCE WITH ROOF TRUSS DESIGN MANUFACTURER

LINTEL DESIGN CERTIFICATE AND TRUSS DESIGN CERTIFICATED TO BE PROVIDED PRIOR TO MANUFACTURE

1.1.1 RIB RAFT SLAB FLOOR SYSTEM DESIGNED BY ENGINEERS

2.1.1 2.4 STUD WALLS FRAMED WITH 90x45mm 'H1.2' SG8 FRAMING, STUDS AT 600mm MAX CRS. ALL DWANGS AT 800mm MAX CRS.

3.1.1 10mm STANDARD GIB BOARD WITH EXCEPTION OF BRACING PANELS AS SHOWN ON BRACING PLAN.

3.1.2 R2.6 WALL BATT INSULATION TO ALL EXTERNAL 90mm WALLS INCLUDING PARTY WALL BETWEEN GARAGE AND DWELLING. R4.0 WALL BATT INSULATION TO 140mm FRAMED WALLS.

3.1.3 "H1.2" BOTTOM PLATE FIXED WITH M12x130mm GALV. "HILTI HUS" WITH 50x50x3mm GALV. PLATE WASHERS @ 900mm MAX. CRS. PROVIDE DPC UNDER ALL BOTTOM PLATES.

4.1.1 HIGH WIND ZONE - 0.4mm BMT CORRUGATED "COLORSTEEL " ROOFING FIXED OVER SELF SUPPORTING ROOF UNDERLAY TO 70x45mm "H1.2" SG8 PURLINS @ 900mm MAX.
CRS (600mm CRS @ RIDGE & GUTTER). PURLINS CONNECTED TO TRUSSES/RAFTERS WITH 1/10g SELF DRILLING SCREW 80mm MINIMUM LONG (2.4kN FIXING CAPACITY). ROOFING FIXED WITH "C2" FIXING PATTERN AS PER NZBC E2/AS1 TABLE 11 (C2 FIXING PATTERN IS - HIT 1, MISS 1, HIT 1, MISS 2...).
90 x 45mm SG8 OUTRIGGERS AT 900mm MAX CRS FIXED TO FRAMING WITH 2/90x3.15mm GUN NAILS.

4.1.2 SELECTED COLOURSTEEL QUARTER ROUND GUTTER & FASCIA SYSTEM

4.1.3 MIN 74mmØ (INT) COLORSTEEL DOWNPIPE

4.1.4 2x25x1mm M/S STRAP BRACE WITH TENSIONERS

4.1.5 13mm STANDARD GIB FIXED TO 70 x 35mm TIMBER CEILING BATTENS AT 600mm MAX CRS.

4.1.6 4.5mm HARDIEFLEX SOFFIT LINING FIXED TO FRAMING AT 600mm CRS WITH 40x2.8mm HARDIFLEX NAILS, REFER TO JAMES HARDIE EAVE AND SOFFIT INSTALLATION MANUAL FOR DETAILS

4.1.7 **R6.0** BATTS TO ENTIRE ROOF OF INSULATED ENVELOPE WITH THE EXCEPTION OF 300mm AROUND PERIMETER ON THE INSULATED ENVELOPE. BATTS TO ACHIEVE 25mm AIR GAP AT EAVE/TOP PLATE JUNCTION. G502 VENT ROLL TO MAINTAIN A CONTINUOUS 25mm AIR GAP BETWEEN THE UNDERSIDE OF THE ROOFIING AND INSUALTATION.

5.1.1 ROCKCOTE EPS CAVITY PLUS RENDER SYSTEM APPLIED OVER 50mm GRAPHEX POLYSTYRENE SHEET SUBSTRATE FIXED THROUGH 40x22mm POLYSTYRENE CAVITY BATTENS (AS1366 PART 3 CLASS H) AND BUILDING WRAP TO WALL FRAMING FRAMING WITH FLAT-HEAD, HOT-DIPPED GALVANISED NAILS AND ROCKCOTE 40mm DIAMETER NYLON WASHERS.

5.1.2 SELECTED 70 SERIES CLAY BRICK VENEER FIXED OVER BUILDING WRAP WITH GALV. (EM) SCREW FIX TIES @ 600mm MAX. CRS HORIZONTALLY & 400mm MAX. CRS. VERTICALLY. MAINTAIN 40mm MIN. CAVITY BETWEEN FRAMING & VENEER. BRICK TIES TO BE MINIMUM 470G/m^2 GALVANISING ON MILD STEEL.

5.1.3 180x16mm LINEA WEATHERBOARD TO 45x20mm "H3.1" BATTENS FIXED THROUGH SYNTHETIC BUILDING WRAP WITH 60x3.15mm HARDIFLEX NAILS FINISH FLUSH WITH BOARD SURFACE FOR CONCEALED NAILING OR 75x3.15mm HOT-DIPPED GALVANISED JOLT HEAD NAILS MAY BE DRIVEN THROUGH BOTH THICKNESSES AT BOARD LAP FOR FACE NAILING.

5.1.4 ALL POWDER COATED THERMALLY BROKEN ALUMINIUM JOINERY UNITS TO BE DOUBLE GLAZED LOW-E-XL WITH ARGON GAS AND SHALL COMPLY WITH NZS4223.

CONSENT PLANS

ANDERSON ARCHITECTURE
andersonarchitecture.co.nz
03 578 1448 // 027 823 7790

ALL MEASUREMENTS TO BE CONFIRMED ON SITE BY THE CONTRACTOR PRIOR TO THE COMMENCEMENT OF WORK

© Anderson Architecture. All rights reserved. No part of this work covered by copyright may be reproduced or copied in any form or by any means without the written permission of Anderson Architecture.

4 BEDROOM DWELLING

KELSEY & TIAAN KILIAN

93 CLAUSEN AVE, LEESTON

CROSS SECTION

SCALE: 1:50	DRAWN: JASON	DATE: 1-04-2025

REV	DATE	AMENDMENT	JOB NO:	
			25103	
			DWG NO:	REV
			D01	

SDC - Approved Building Consent Document - BC250732 - Pg 13 of 40 - 6/06/2025 - sandea

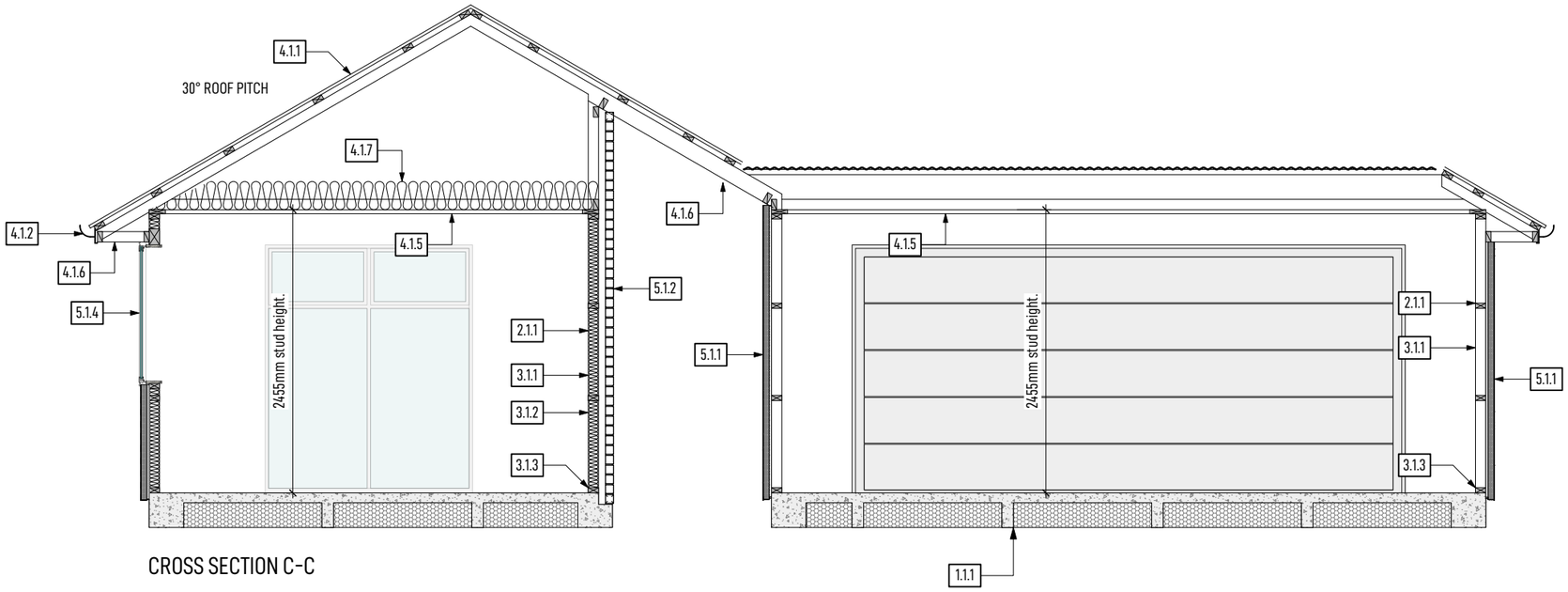

CROSS SECTION C-C

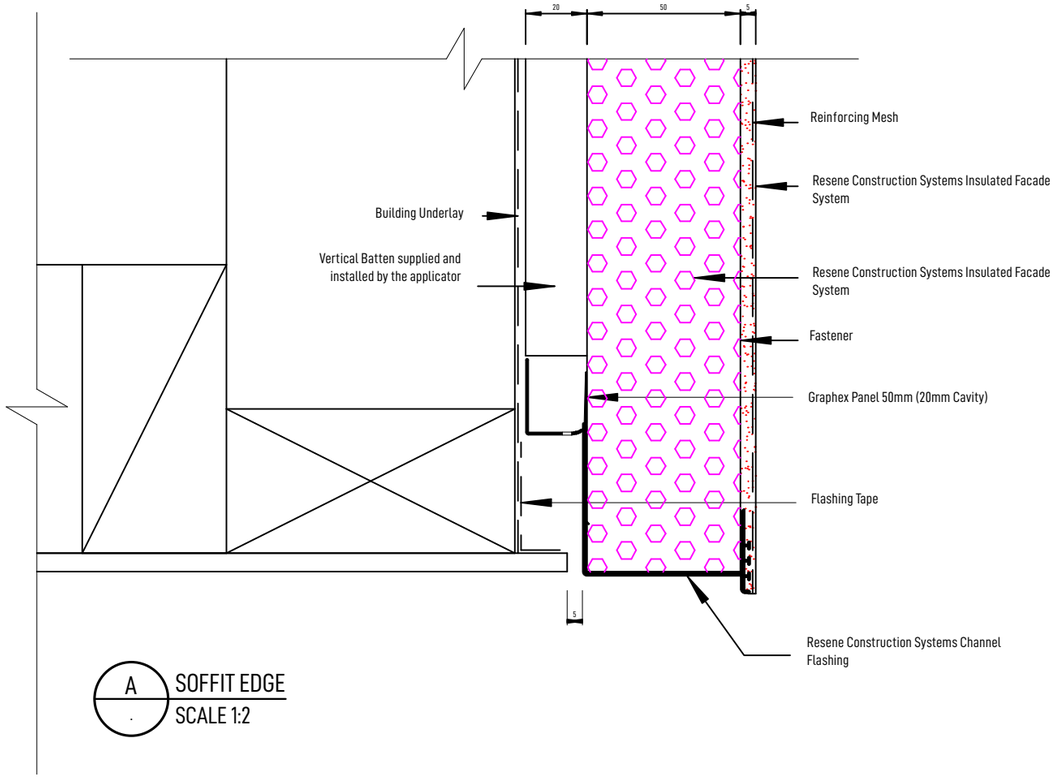

A SOFFIT EDGE
SCALE 1:2

NOTES

NAILPLATE TRUSSES

TRUSS MANUFACTURER SHALL PROVIDE A PRODUCER STATEMENT PRIOR TO FABRICATION

TIMBER FRAMING

UNLESS OTHERWISE STATED ALL WALLS TO BE FRAMED WITH 90 x 45 SG8 STUDS. ALL WALL FRAMING SHALL BE PRESERVATIVE TREATED H1.2

SIMILARLY, UNLESS OTHERWISE STATED ALL OTHER FRAMING TIMBER (INCLUDING FLOOR, ROOF, DECK, ETC.) SHALL HAVE A MINIMUM GRADE OF SG8

LINTELS

ALL LINTELS AND BEAMS TO BE SG8 AND SHALL BE PRESERVATIVE TREATED "H1.2" UNLESS OTHERWISE SHOWN

FOR PREVENTION OF UPLIFT REFER TO "MITEK LUMBERLOK" LINTEL FIXING SCHEDULE FOR LINTEL FIXING "TYPE" DEFINITIONS

ALL LINTELS AND BEAMS TO BE DESIGNED IN ACCORDANCE WITH ROOF TRUSS DESIGN MANUFACTURER

LINTEL DESIGN CERTIFICATE AND TRUSS DESIGN CERTIFICATED TO BE PROVIDED PRIOR TO MANUFACTURE

1.1.1 RIB RAFT SLAB FLOOR SYSTEM DESIGNED BY ENGINEERS

2.1.1 2.4 STUD WALLS FRAMED WITH 90x45mm 'H1.2' SG8 FRAMING, STUDS AT 600mm MAX CRS. ALL DWANGS AT 800mm MAX CRS.

3.1.1 10mm STANDARD GIB BOARD WITH EXCEPTION OF BRACING PANELS AS SHOWN ON BRACING PLAN.

3.1.2 R2.6 WALL BATT INSULATION TO ALL EXTERNAL 90mm WALLS INCLUDING PARTY WALL BETWEEN GARAGE AND DWELLING. R4.0 WALL BATT INSULATION TO 140mm FRAMED WALLS.

3.1.3 "H1.2" BOTTOM PLATE FIXED WITH M12x130mm GALV. "HILTI HUS" WITH 50x50x3mm GALV. PLATE WASHERS @ 900mm MAX. CRS. PROVIDE DPC UNDER ALL BOTTOM PLATES.

4.1.1 HIGH WIND ZONE - 0.4mm BMT CORRUGATED "COLORSTEEL " ROOFING FIXED OVER SELF SUPPORTING ROOF UNDERLAY TO 70x45mm "H1.2" SG8 PURLINS @ 900mm MAX.
CRS (600mm CRS @ RIDGE & GUTTER). PURLINS CONNECTED TO TRUSSES/RAFTERS WITH 1/10g SELF DRILLING SCREW 80mm MINIMUM LONG (2.4kN FIXING CAPACITY). ROOFING FIXED WITH "C2" FIXING PATTERN AS PER NZBC E2/AS1 TABLE 11 (C2 FIXING PATTERN IS - HIT 1, MISS 1, HIT 1, MISS 2...).
90 x 45mm SG8 OUTRIGGERS AT 900mm MAX CRS FIXED TO FRAMING WITH 2/90x3.15mm GUN NAILS.

4.1.2 SELECTED COLOURSTEEL QUARTER ROUND GUTTER & FASCIA SYSTEM

4.1.3 MIN 74mmØ (INT) COLORSTEEL DOWNPIPE

4.1.4 2x25x1mm M/S STRAP BRACE WITH TENSIONERS

4.1.5 13mm STANDARD GIB FIXED TO 70 x 35mm TIMBER CEILING BATTENS AT 600mm MAX CRS.

4.1.6 4.5mm HARDIEFLEX SOFFIT LINING FIXED TO FRAMING AT 600mm CRS WITH 40x2.8mm HARDIFLEX NAILS, REFER TO JAMES HARDIE EAVE AND SOFFIT INSTALLATION MANUAL FOR DETAILS

4.1.7 **R6.0** BATTS TO ENTIRE ROOF OF INSULATED ENVELOPE WITH THE EXCEPTION OF 300mm AROUND PERIMETER ON THE INSULATED ENVELOPE. BATTS TO ACHIEVE 25mm AIR GAP AT EAVE/TOP PLATE JUNCTION. G502 VENT ROLL TO MAINTAIN A CONTINUOUS 25mm AIR GAP BETWEEN THE UNDERSIDE OF THE ROOFIING AND INSUALTATION.

5.1.1 ROCKCOTE EPS CAVITY PLUS RENDER SYSTEM APPLIED OVER 50mm GRAPHEX POLYSTYRENE SHEET SUBSTRATE FIXED THROUGH 40x22mm POLYSTYRENE CAVITY BATTENS (AS1366 PART 3 CLASS H) AND BUILDING WRAP TO WALL FRAMING FRAMING WITH FLAT-HEAD, HOT-DIPPED GALVANISED NAILS AND ROCKCOTE 40mm DIAMETER NYLON WASHERS.

5.1.2 SELECTED 70 SERIES CLAY BRICK VENEER FIXED OVER BUILDING WRAP WITH GALV. (EM) SCREW FIX TIES @ 600mm MAX. CRS HORIZONTALLY & 400mm MAX. CRS. VERTICALLY. MAINTAIN 40mm MIN. CAVITY BETWEEN FRAMING & VENEER. BRICK TIES TO BE MINIMUM 470G/m^2 GALVANISING ON MILD STEEL.

5.1.3 180x16mm LINEA WEATHERBOARD TO 45x20mm "H3.1" BATTENS FIXED THROUGH SYNTHETIC BUILDING WRAP WITH 60x3.15mm HARDIFLEX NAILS FINISH FLUSH WITH BOARD SURFACE FOR CONCEALED NAILING OR 75x3.15mm HOT-DIPPED GALVANISED JOLT HEAD NAILS MAY BE DRIVEN THROUGH BOTH THICKNESSES AT BOARD LAP FOR FACE NAILING.

5.1.4 ALL POWDER COATED THERMALLY BROKEN ALUMINIUM JOINERY UNITS TO BE DOUBLE GLAZED LOW-E-XL WITH ARGON GAS AND SHALL COMPLY WITH NZS4223.

CONSENT PLANS

ANDERSON ARCHITECTURE
andersonarchitecture.co.nz
03 578 1448 // 027 823 7790

ALL MEASUREMENTS TO BE CONFIRMED ON SITE BY THE CONTRACTOR PRIOR TO THE COMMENCEMENT OF WORK

© Anderson Architecture. All rights reserved. No part of this work covered by copyright may be reproduced or copied in any form or by any means without the written permission of Anderson Architecture.

4 BEDROOM DWELLING
KELSEY & TIAAN KILIAN
93 CLAUSEN AVE, LEESTON

CROSS SECTION

SCALE: 1:50	DRAWN: JASON	DATE: 1-04-2025

REV	DATE	AMENDMENT	JOB NO:	
			25103	
			DWG NO:	REV
			D02	

SDC - Approved Building Consent Document - BC250732 - Pg 14 of 40 - 6/06/2025 - sandea

NOTES

DIMENSIONS

ALL DIMENSIONS ARE TO FRAMING UNLESS OTHERWISE STATED.

KITCHEN DESIGN

KITCHEN DESIGN SHALL BE IN ACCORDANCE WITH SEPARATE KITCHEN PLANS. CONFIRM POSITION OF WASTE PIPES PRIOR TO POURING THE FLOOR SLAB.

LEGAL:

SHOULD THERE BE ANY OMISSION, DOUBT OR AMBIGUITY AS TO THE MEANING OF ANY PART TO THE DRAWINGS AND SPECIFICATIONS, CONTACT THE DESIGNER BEFORE CONTINUING FURTHER WORK.

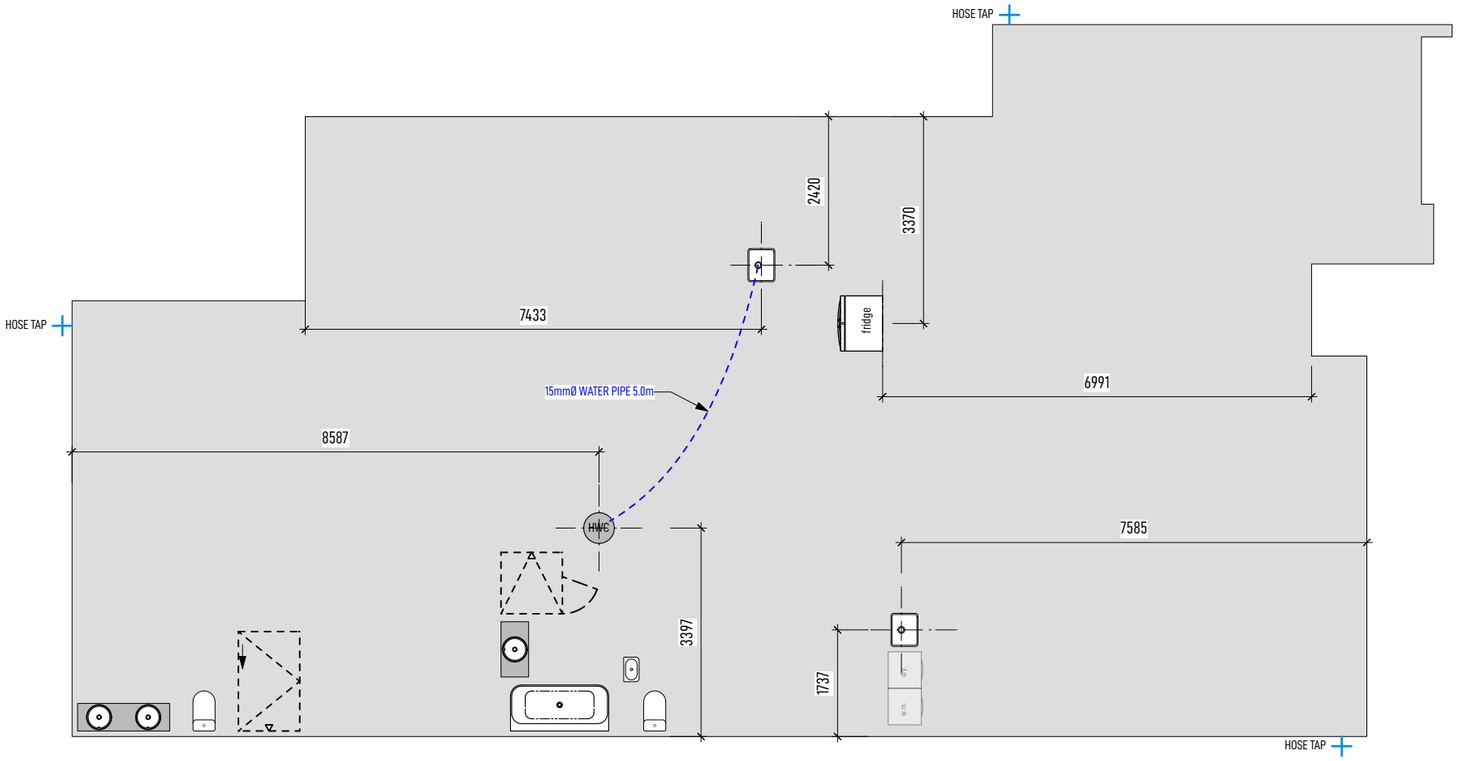

PLUMBING LAYOUT 1:100

SEE BATHROOM PLANS FOR WASTE DIMENSIONS

CONSENT PLANS

ANDERSON ARCHITECTURE
andersonarchitecture.co.nz
03 578 1448 // 027 823 7790

ALL MEASUREMENTS TO BE CONFIRMED ON SITE BY THE CONTRACTOR PRIOR TO THE COMMENCEMENT OF WORK

© Anderson Architecture. All rights reserved. No part of this work covered by copyright may be reproduced or copied in any form or by any means without the written permission of Anderson Architecture.

4 BEDROOM DWELLING

KELSEY & TIAAN KILIAN

93 CLAUSEN AVE, LEESTON

PLUMBING LAYOUT

SCALE: 1:100	DRAWN: JASON	DATE: 1-04-2025

REV	DATE	AMENDMENT	JOB NO: 25103	
			DWG NO: E01	REV

SDC - Approved Building Consent Document - BC250732 - Pg 15 of 40 - 6/06/2025 - sandea

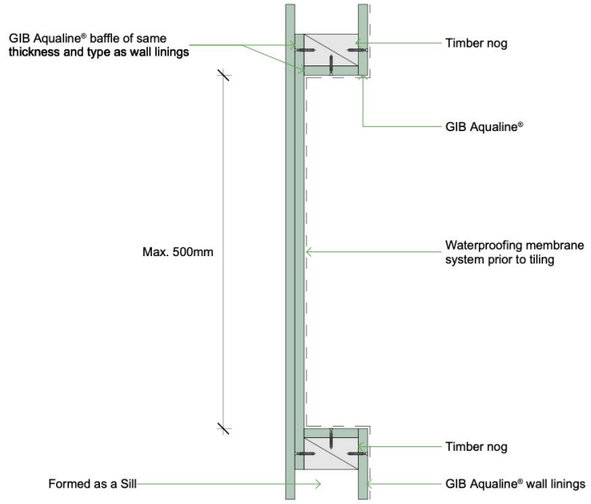

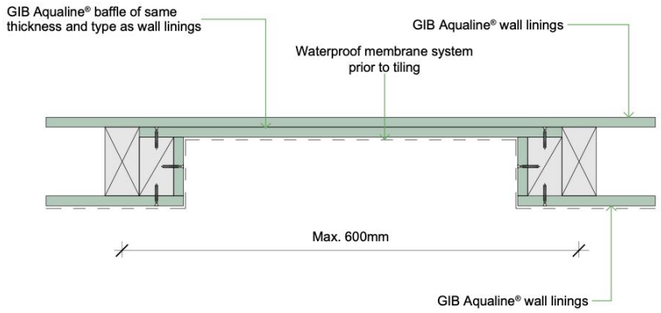

Larger recesses can be accommodated depending on specific framing layout provided 500mm is not exceeded in at least one direction.

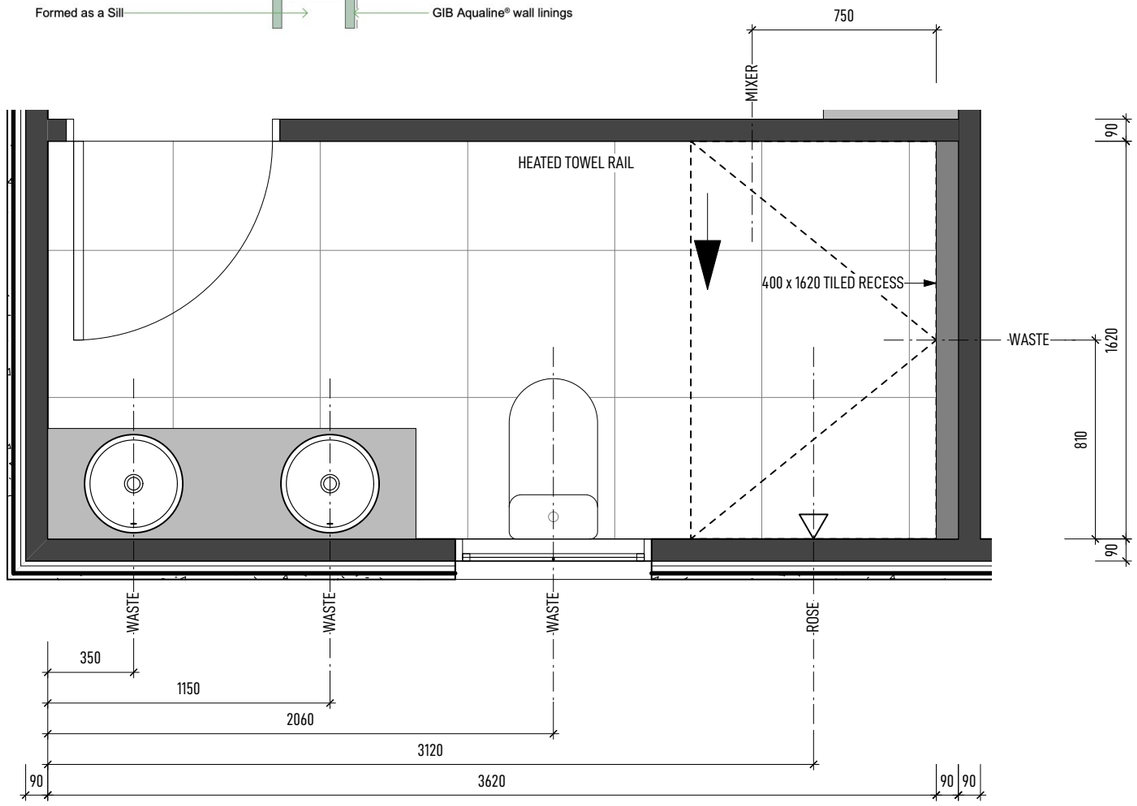

ENSUITE PLAN 1:25

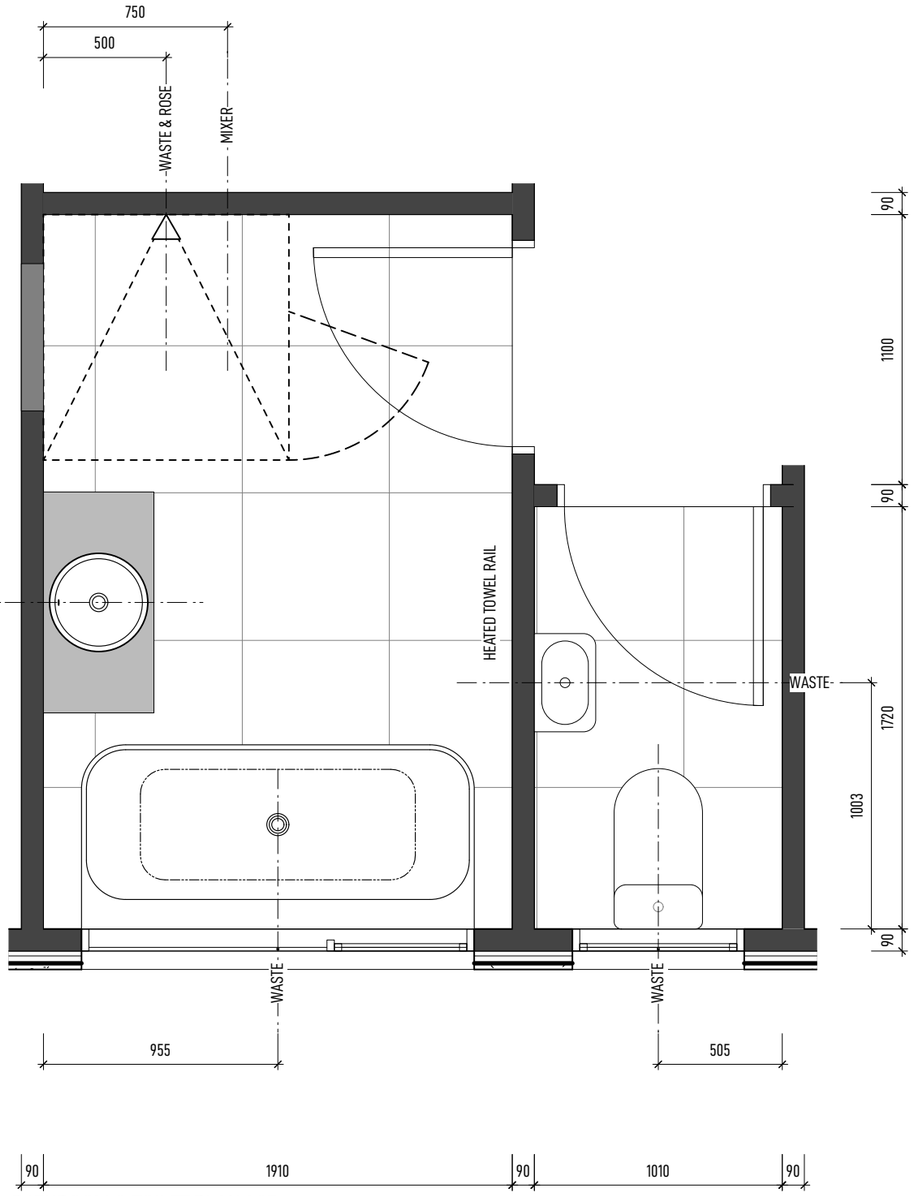

BATHROOM & TOILET PLAN 1:25

NOTES

DIMENSIONS

ALL DIMENSIONS ARE TO FRAMING UNLESS OTHERWISE STATED.

KITCHEN DESIGN

KITCHEN DESIGN SHALL BE IN ACCORDANCE WITH SEPARATE KITCHEN PLANS. CONFIRM POSITION OF WASTE PIPES PRIOR TO POURING THE FLOOR SLAB.

LEGAL:

SHOULD THERE BE ANY OMISSION, DOUBT OR AMBIGUITY AS TO THE MEANING OF ANY PART TO THE DRAWINGS AND SPECIFICATIONS, CONTACT THE DESIGNER BEFORE CONTINUING FURTHER WORK.

CONSENT PLANS

ANDERSON ARCHITECTURE
andersonarchitecture.co.nz
03 578 1448 // 027 823 7790

ALL MEASUREMENTS TO BE CONFIRMED ON SITE BY THE CONTRACTOR PRIOR TO THE COMMENCEMENT OF WORK

© Anderson Architecture. All rights reserved. No part of this work covered by copyright may be reproduced or copied in any form or by any means without the written permission of Anderson Architecture.

4 BEDROOM DWELLING

KELSEY & TIAAN KILIAN

93 CLAUSEN AVE, LEESTON

BATHROOM PLANS

SCALE: 1:25	DRAWN: JASON	DATE: 1-04-2025

REV	DATE	AMENDMENT	JOB NO: 25103	
			DWG NO: E02	REV

SDC - Approved Building Consent Document - BC250732 - Pg 16 of 40 - 6/06/2025 - sandea

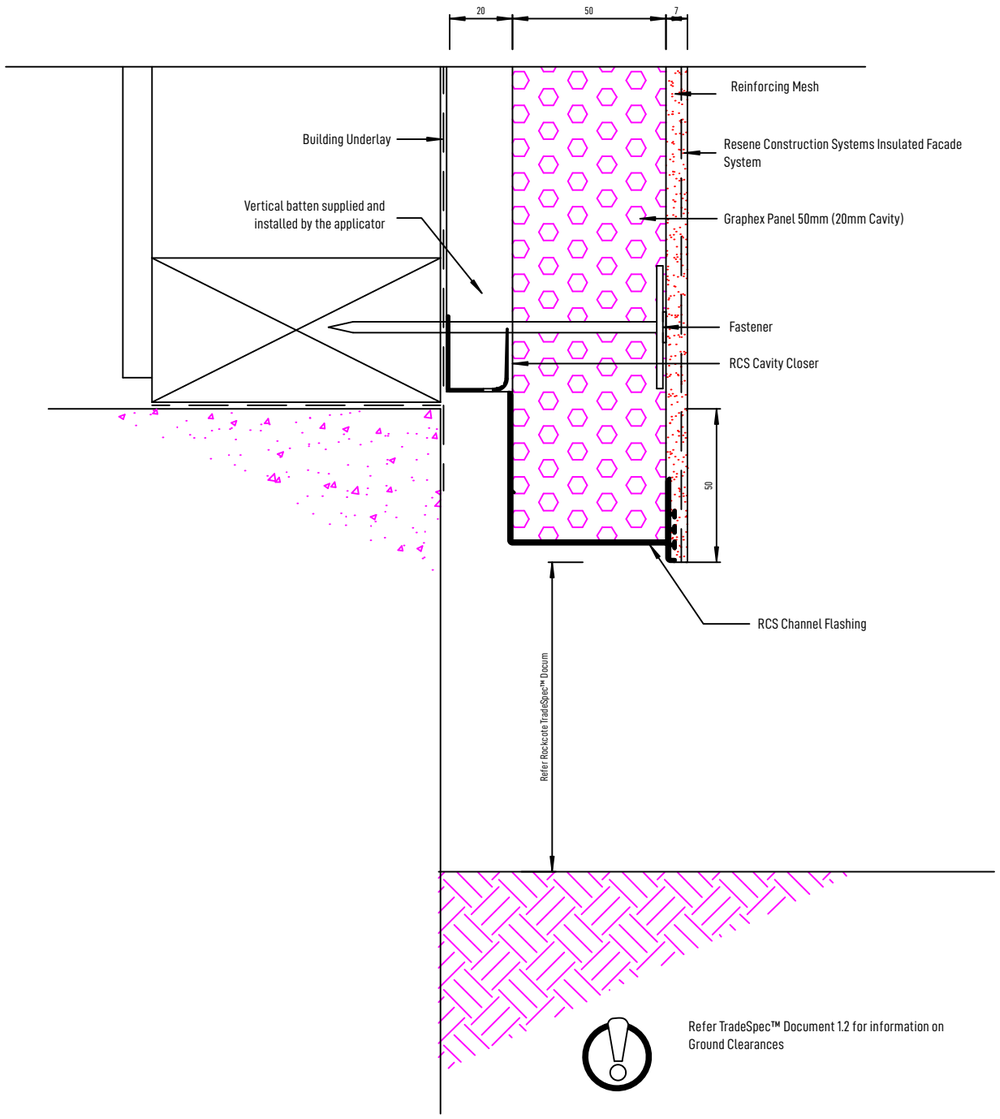

A ROCKCOTE BASE DETAIL
SCALE 1:2

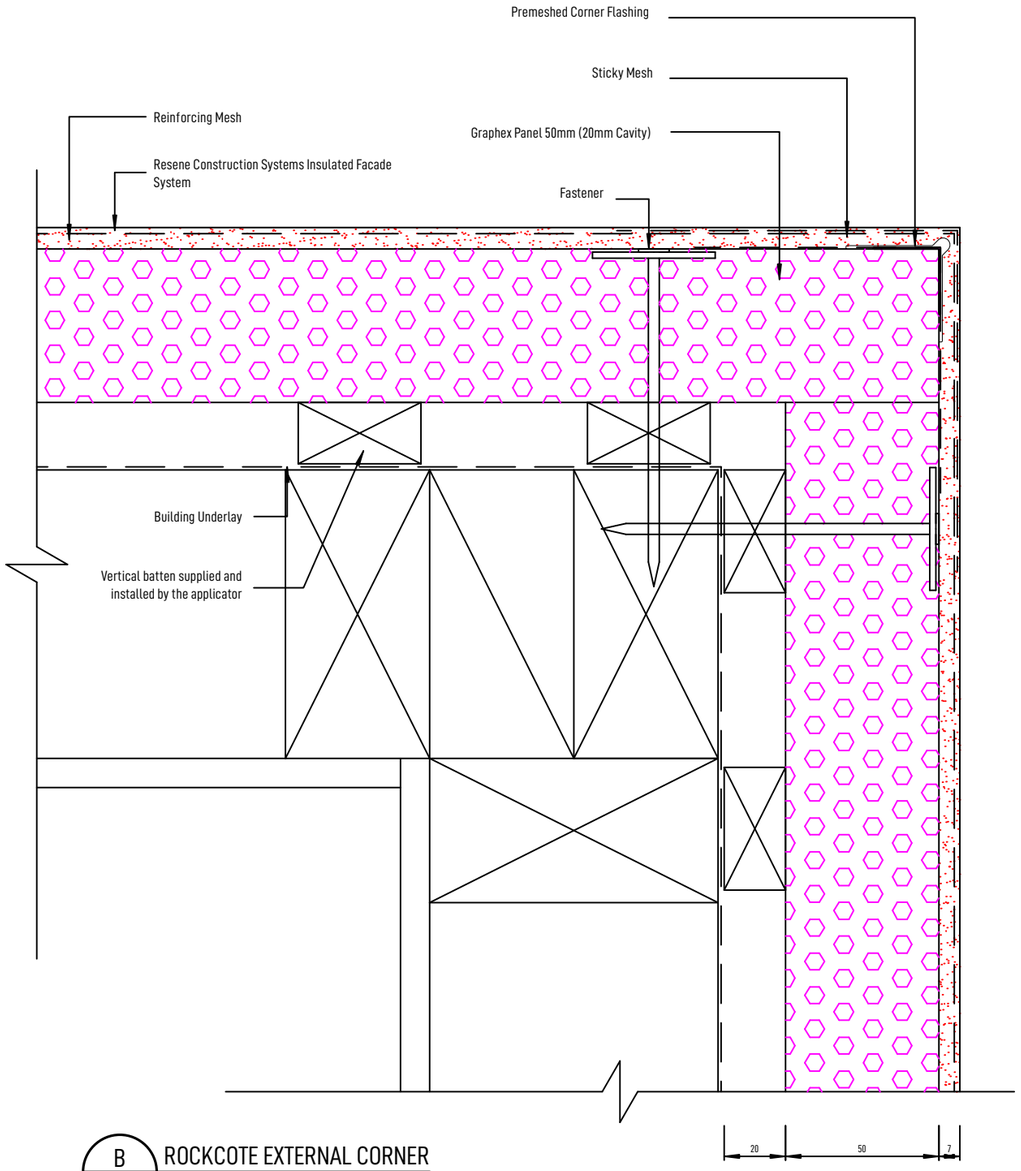

B ROCKCOTE EXTERNAL CORNER
SCALE 1:2

CONSENT PLANS

ANDERSON ARCHITECTURE
andersonarchitecture.co.nz
03 578 1448 // 027 823 7790

ALL MEASUREMENTS TO BE CONFIRMED ON SITE BY THE CONTRACTOR PRIOR TO THE COMMENCEMENT OF WORK

© Anderson Architecture. All rights reserved. No part of this work covered by copyright may be reproduced or copied in any form or by any means without the written permission of Anderson Architecture.

4 BEDROOM DWELLING
KELSEY & TIAAN KILIAN
93 CLAUSEN AVE, LEESTON

DETAILS

SCALE: 1:2	DRAWN: JASON	DATE: 1-04-2025

REV	DATE	AMENDMENT	JOB NO: 25103	
			DWG NO: F01	REV

SDC - Approved Building Consent Document - BC250732 - Pg 17 of 40 - 6/06/2025 - sandea

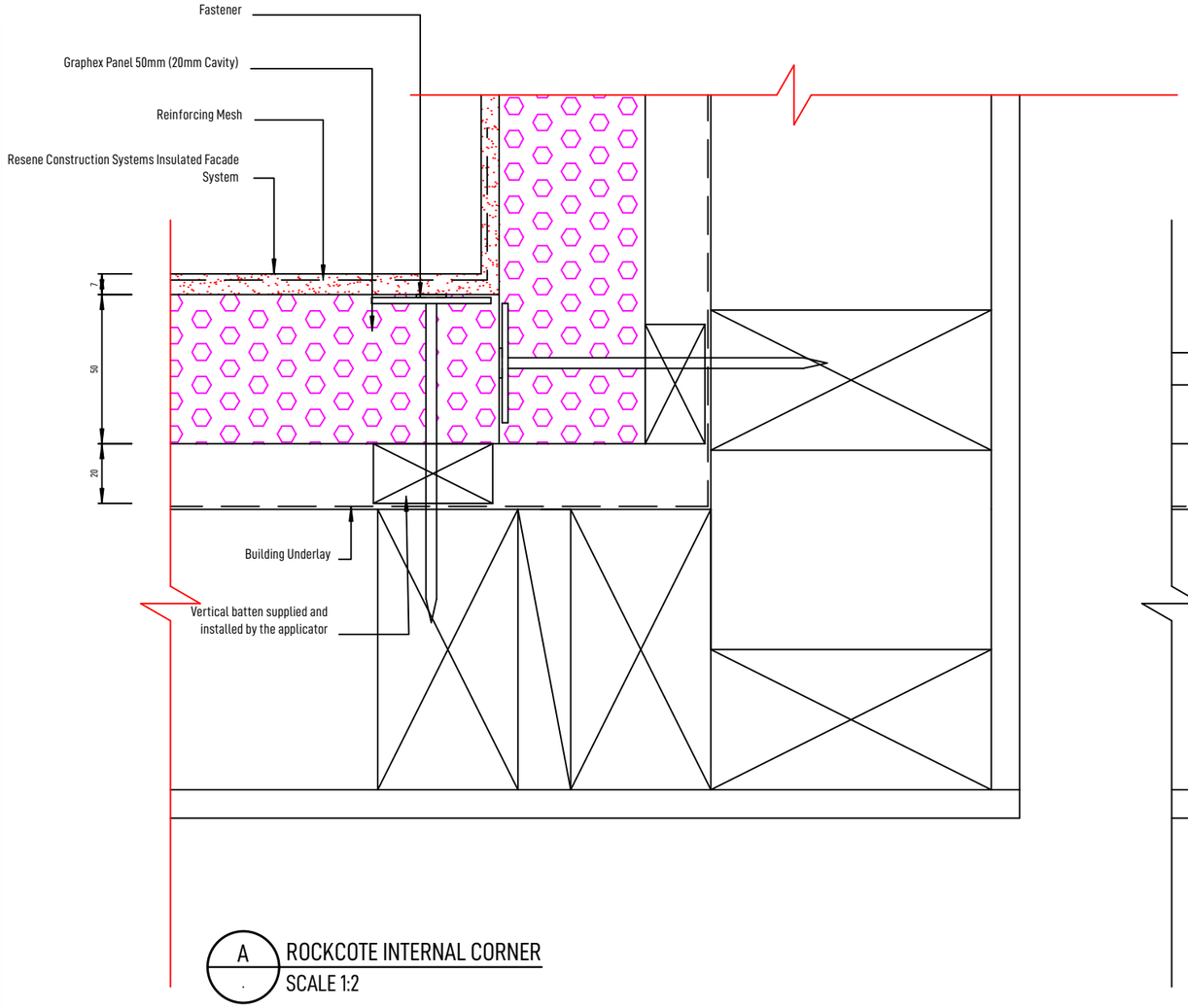

A ROCKCOTE INTERNAL CORNER
SCALE 1:2

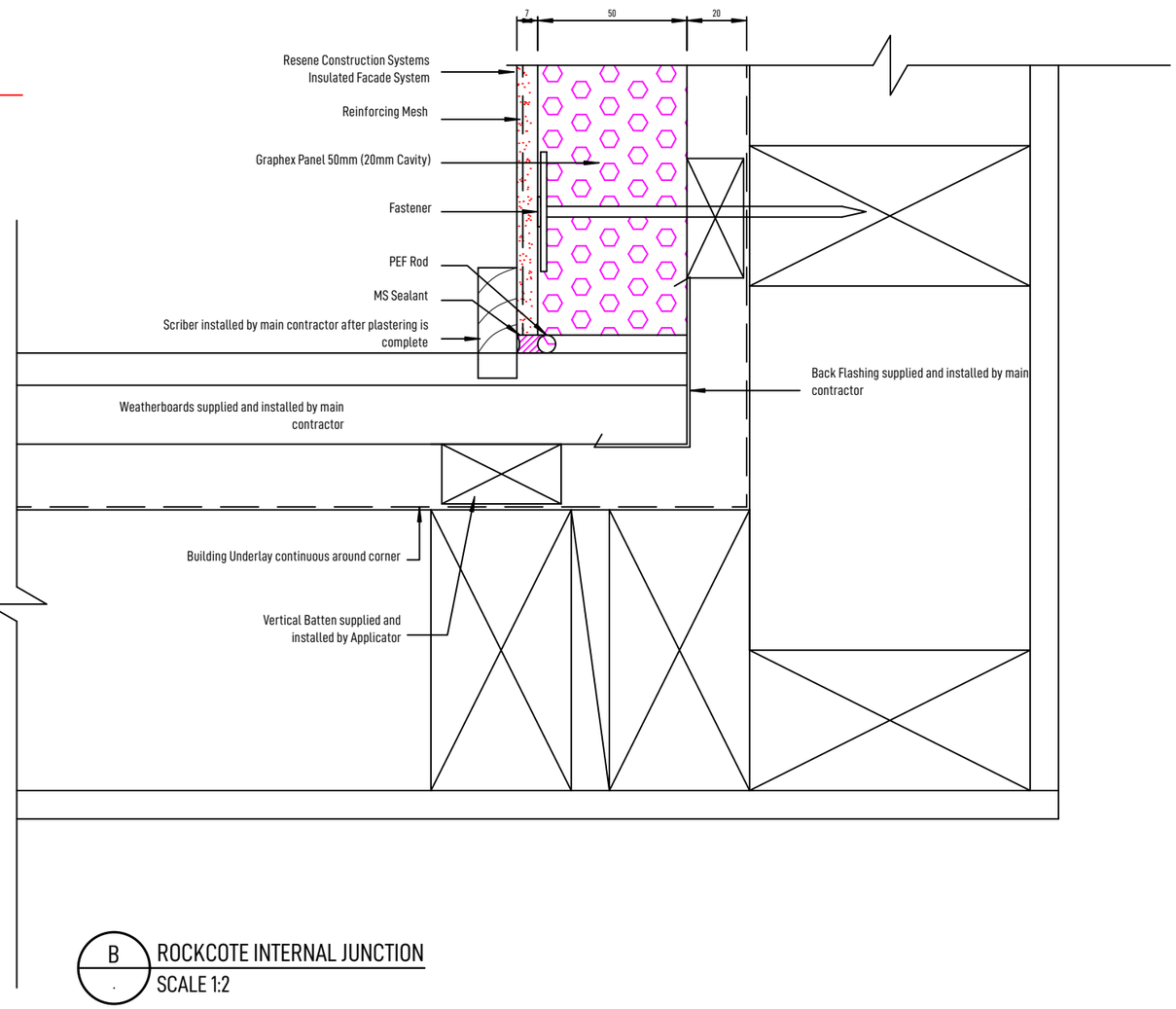

B ROCKCOTE INTERNAL JUNCTION
SCALE 1:2

CONSENT PLANS

ANDERSON ARCHITECTURE
andersonarchitecture.co.nz
03 578 1448 // 027 823 7790

ALL MEASUREMENTS TO BE CONFIRMED ON SITE BY THE CONTRACTOR PRIOR TO THE COMMENCEMENT OF WORK

© Anderson Architecture. All rights reserved. No part of this work covered by copyright may be reproduced or copied in any form or by any means without the written permission of Anderson Architecture.

4 BEDROOM DWELLING
KELSEY & TIAAN KILIAN
93 CLAUSEN AVE, LEESTON

DETAILS

SCALE: 1:2	DRAWN: JASON	DATE: 1-04-2025

REV	DATE	AMENDMENT	JOB NO: 25103	
			DWG NO: F02	REV

SDC - Approved Building Consent Document - BC250732 - Pg 18 of 40 - 6/06/2025 - sandea

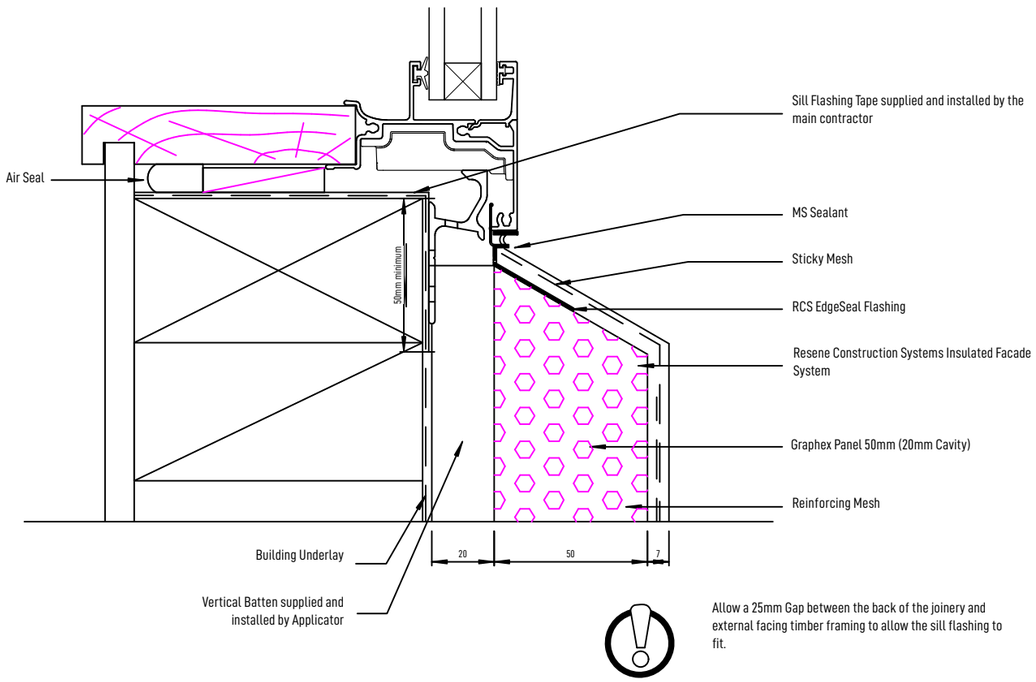

A
.
ROCKCOTE WINDOW SILL
SCALE 1:2

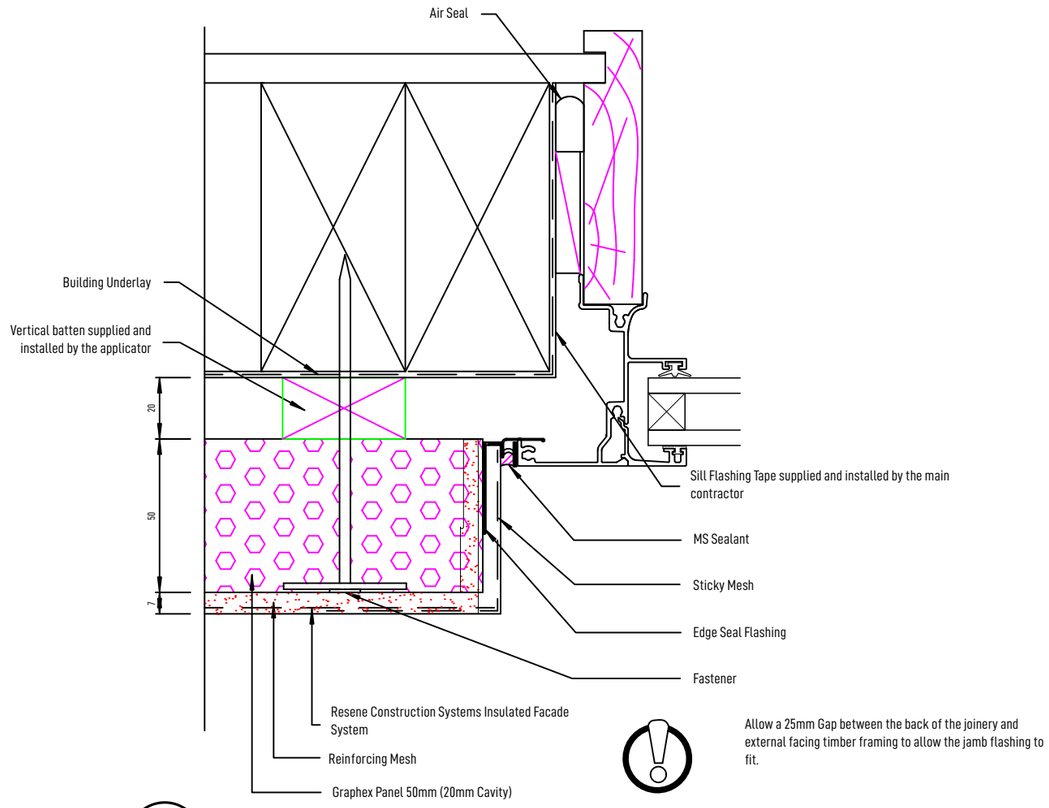

B
.
ROCKCOTE JAMB
SCALE 1:2

CONSENT PLANS

ANDERSON ARCHITECTURE
andersonarchitecture.co.nz
03 578 1448 // 027 823 7790

ALL MEASUREMENTS TO BE CONFIRMED ON SITE BY THE CONTRACTOR PRIOR TO THE COMMENCEMENT OF WORK

© Anderson Architecture. All rights reserved. No part of this work covered by copyright may be reproduced or copied in any form or by any means without the written permission of Anderson Architecture.

4 BEDROOM DWELLING
KELSEY & TIAAN KILIAN
93 CLAUSEN AVE, LEESTON

DETAILS

SCALE: 1:2	DRAWN: JASON	DATE: 1-04-2025

REV	DATE	AMENDMENT	JOB NO: 25103	
			DWG NO: F03	REV

SDC - Approved Building Consent Document - BC250732 - Pg 19 of 40 - 6/06/2025 - sandea

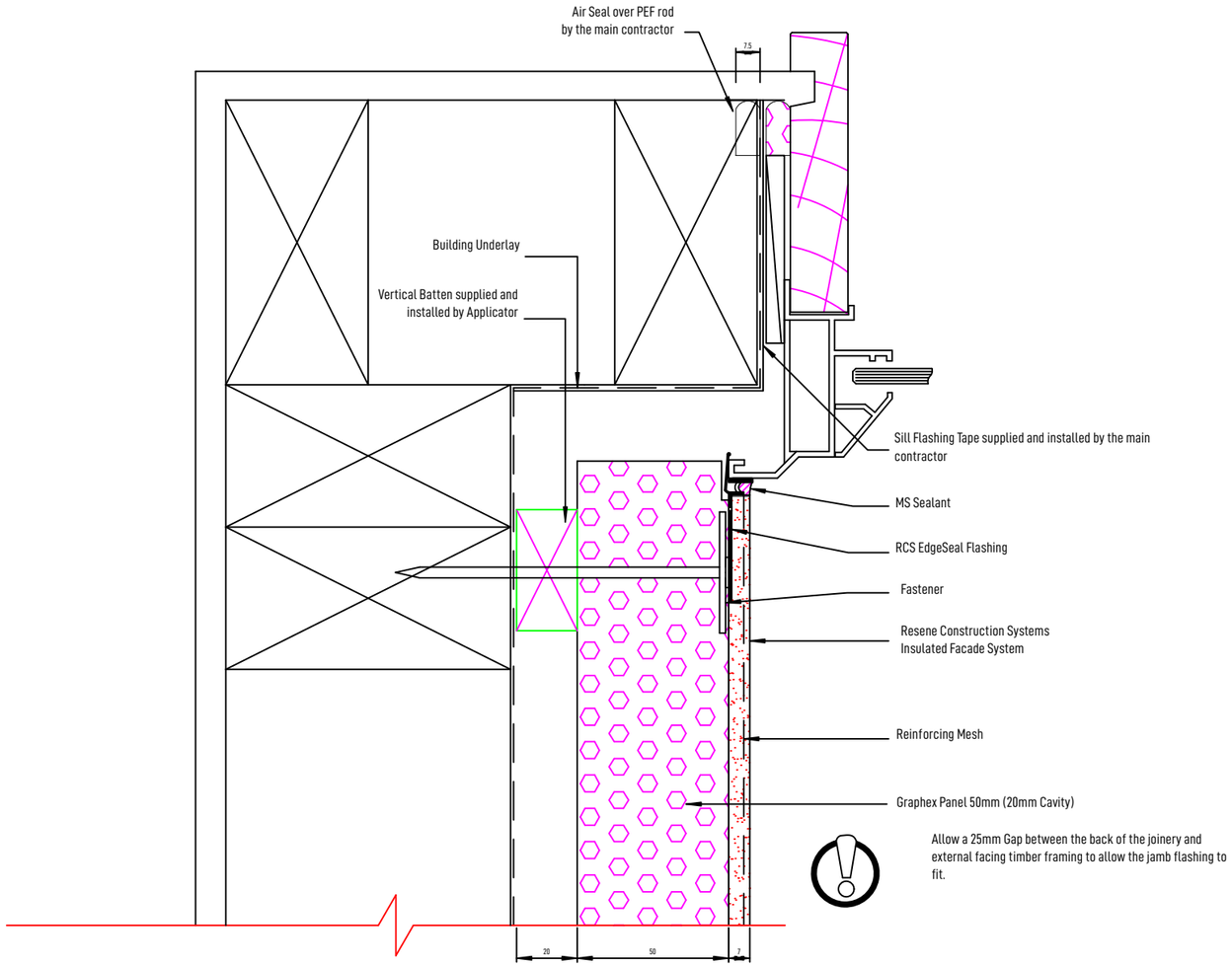

Allow a 25mm Gap between the back of the joinery and external facing timber framing to allow the jamb flashing to fit.

A
.
ROCKCOTE JAMB
SCALE 1:2

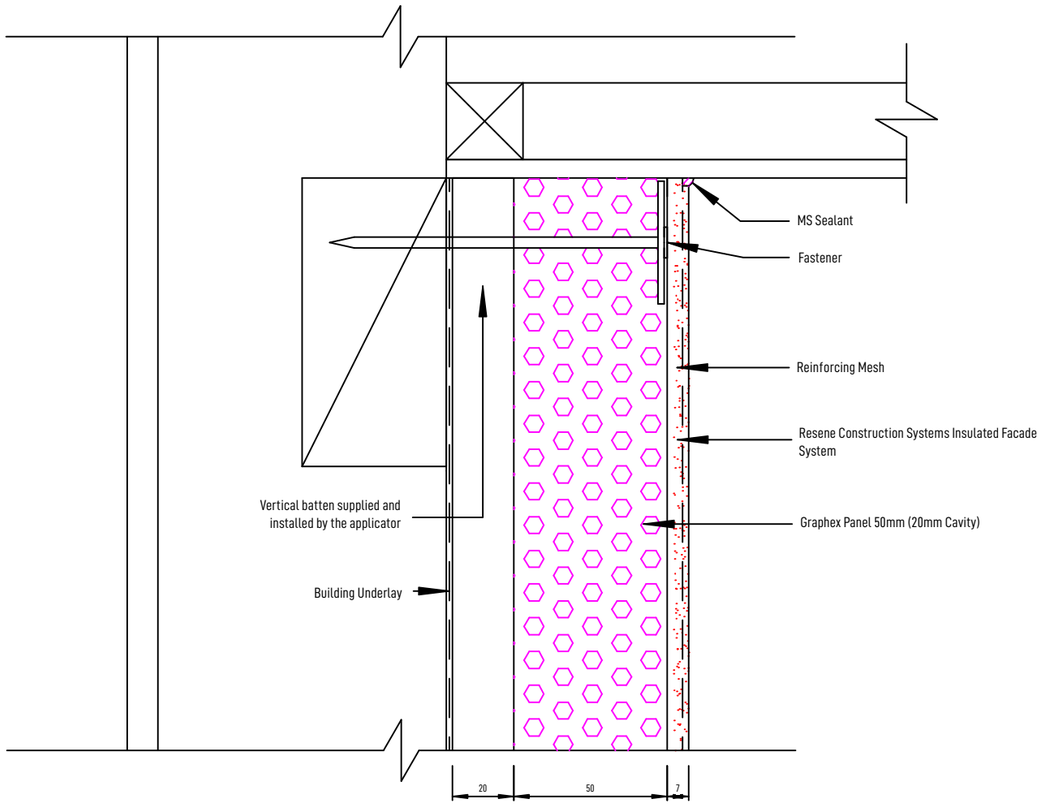

B
.
ROCKCOTE SOFFIT
SCALE 1:2

CONSENT PLANS

ANDERSON ARCHITECTURE
andersonarchitecture.co.nz
03 578 1448 // 027 823 7790

ALL MEASUREMENTS TO BE CONFIRMED ON SITE BY THE CONTRACTOR PRIOR TO THE COMMENCEMENT OF WORK

© Anderson Architecture. All rights reserved. No part of this work covered by copyright may be reproduced or copied in any form or by any means without the written permission of Anderson Architecture.

4 BEDROOM DWELLING

KELSEY & TIAAN KILIAN

93 CLAUSEN AVE, LEESTON

DETAILS

SCALE: 1:2	DRAWN: JASON	DATE: 1-04-2025

REV	DATE	AMENDMENT	JOB NO: 25103	
			DWG NO: F04	REV

SDC - Approved Building Consent Document - BC250732 - Pg 20 of 40 - 6/06/2025 - sandea

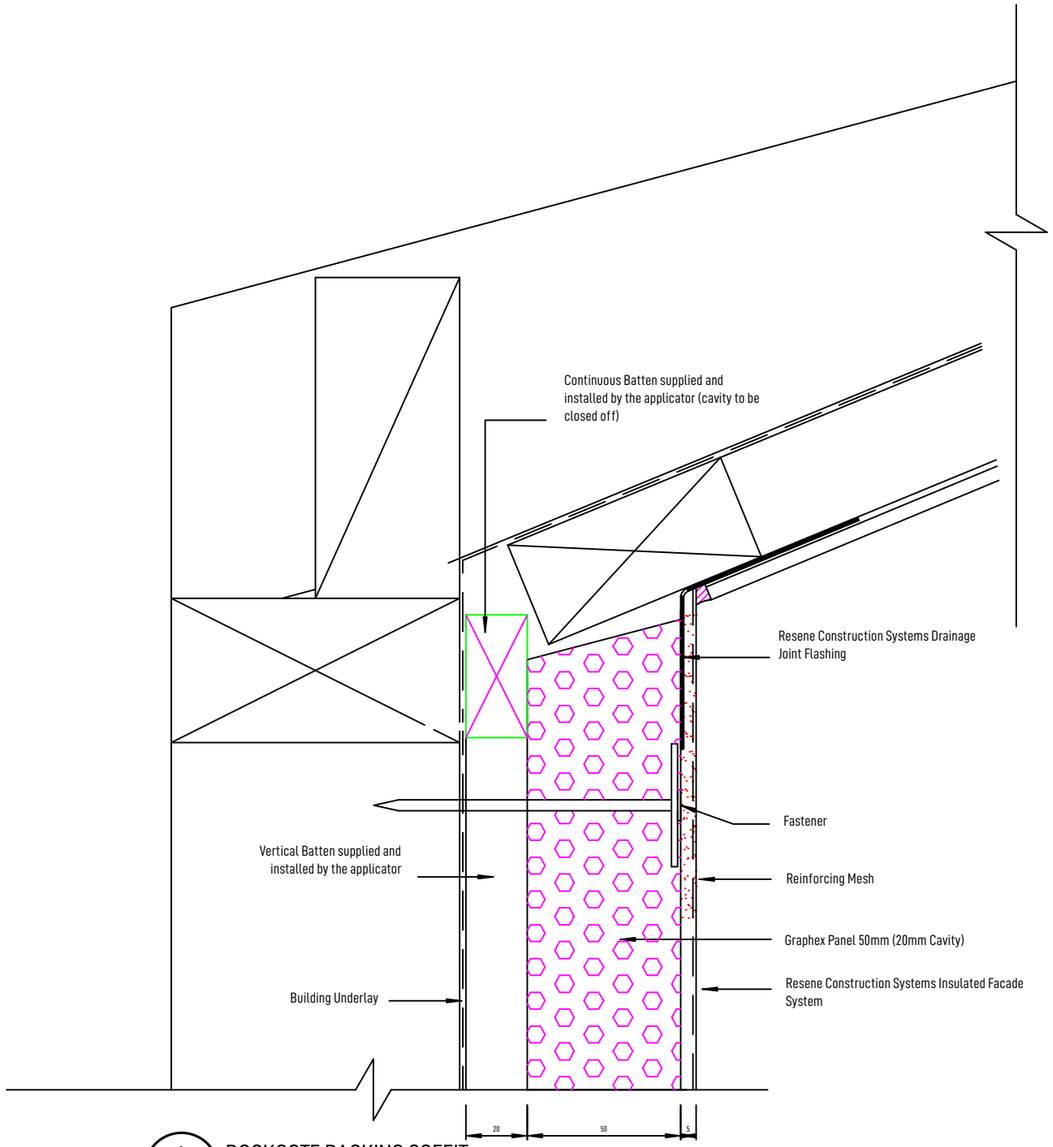

A ROCKCOTE RACKING SOFFIT
SCALE 1:2

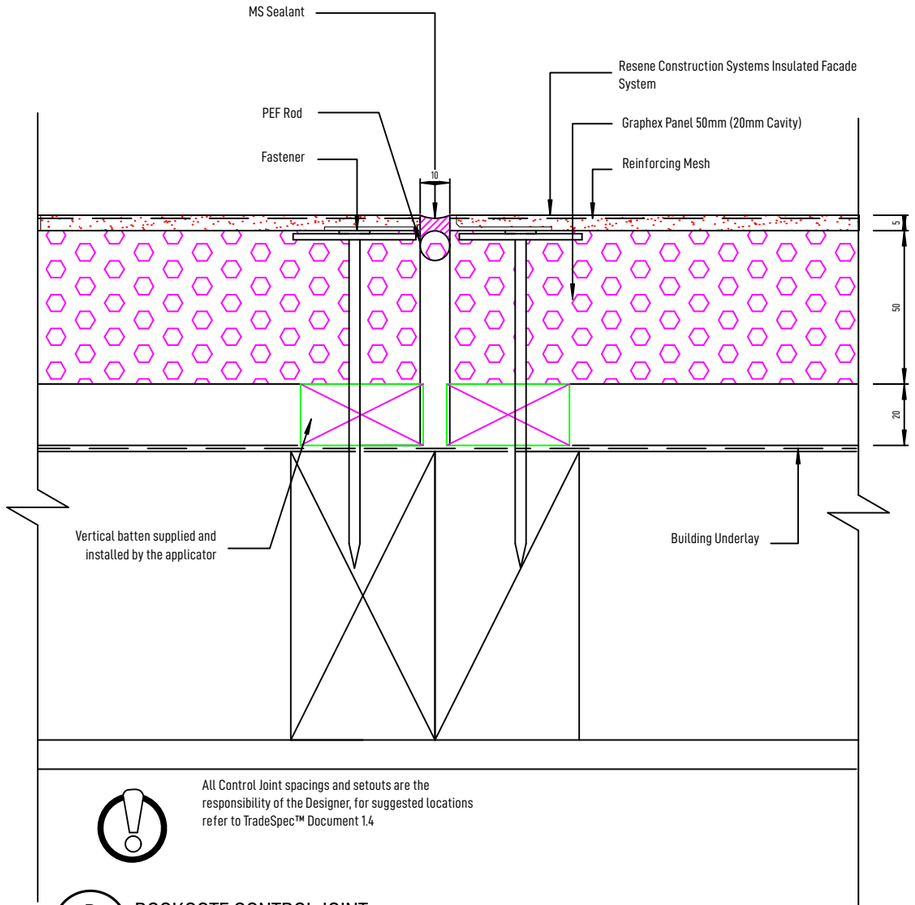

B ROCKCOTE CONTROL JOINT
SCALE 1:2

CONSENT PLANS

ANDERSON ARCHITECTURE
andersonarchitecture.co.nz
03 578 1448 // 027 823 7790

ALL MEASUREMENTS TO BE CONFIRMED ON SITE BY THE CONTRACTOR PRIOR TO THE COMMENCEMENT OF WORK

© Anderson Architecture. All rights reserved. No part of this work covered by copyright may be reproduced or copied in any form or by any means without the written permission of Anderson Architecture.

4 BEDROOM DWELLING
KELSEY & TIAAN KILIAN
93 CLAUSEN AVE, LEESTON

DETAILS

SCALE: 1:2	DRAWN: JASON	DATE: 1-04-2025

REV	DATE	AMENDMENT	JOB NO: 25103	
			DWG NO: F05	REV

SDC - Approved Building Consent Document - BC250732 - Pg 21 of 40 - 6/06/2025 - sandea

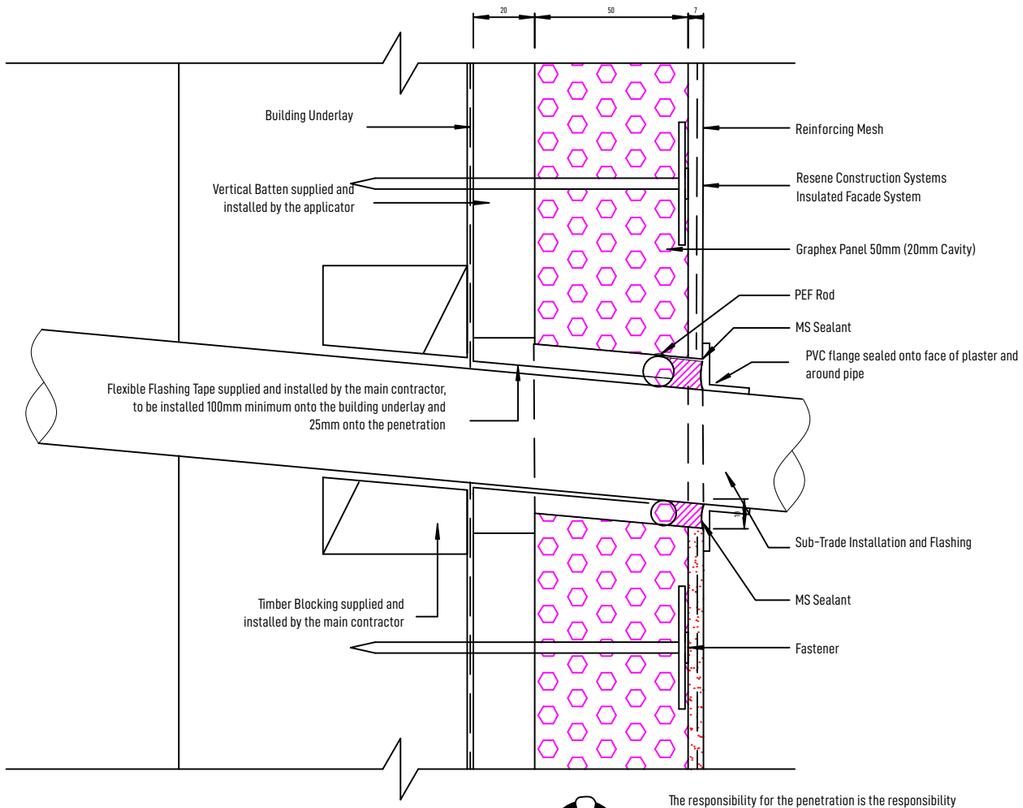

A
.
ROCKCOTE PIPE PENITRATION
SCALE 1:2

The responsibility for the penetration is the responsibility of the main contractor, where possible and practical use a flange.

It is important that there is adequate support for the penetration in the form of timber packing. The penetration should be angled slightly away from the cladding so any moisture is diverted away from the cladding.

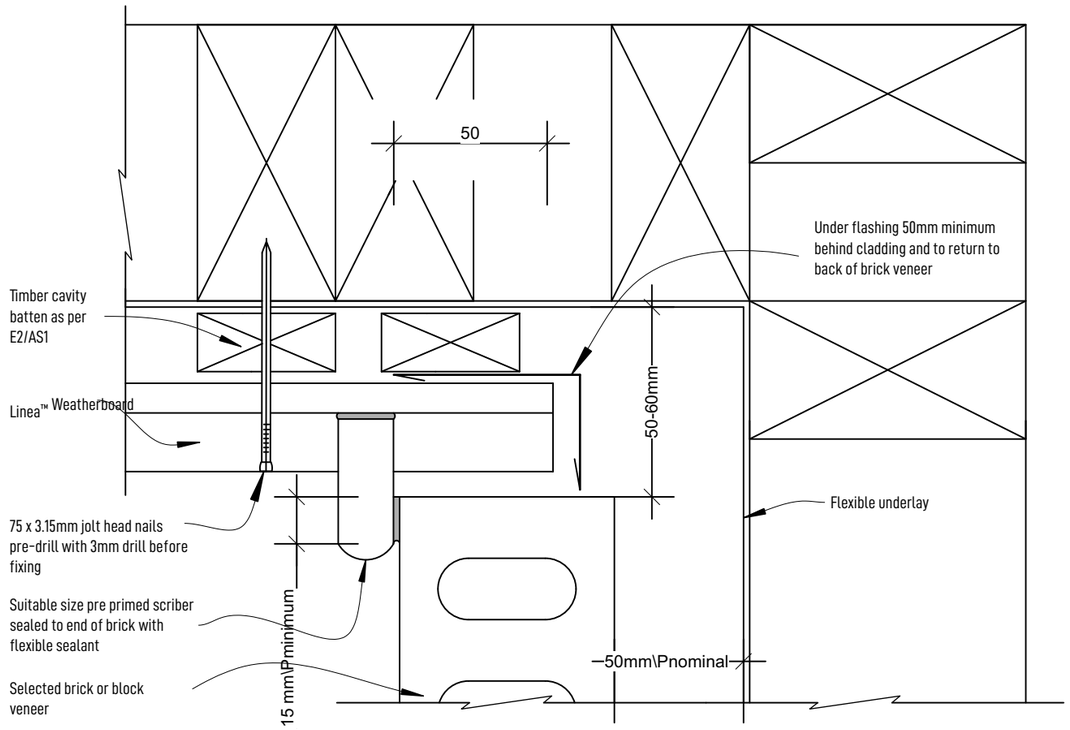

B
.
BRICK LINEA JUNCTION
SCALE 1:2

CONSENT PLANS

ANDERSON ARCHITECTURE
andersonarchitecture.co.nz
03 578 1448 // 027 823 7790

ALL MEASUREMENTS TO BE CONFIRMED ON SITE BY THE CONTRACTOR PRIOR TO THE COMMENCEMENT OF WORK

© Anderson Architecture. All rights reserved. No part of this work covered by copyright may be reproduced or copied in any form or by any means without the written permission of Anderson Architecture.

4 BEDROOM DWELLING
KELSEY & TIAAN KILIAN
93 CLAUSEN AVE, LEESTON

DETAILS

SCALE: 1:2	DRAWN: JASON	DATE: 1-04-2025

REV	DATE	AMENDMENT	JOB NO: 25103	
			DWG NO: F06	REV

SDC - Approved Building Consent Document - BC250732 - Pg 22 of 40 - 6/06/2025 - sandea

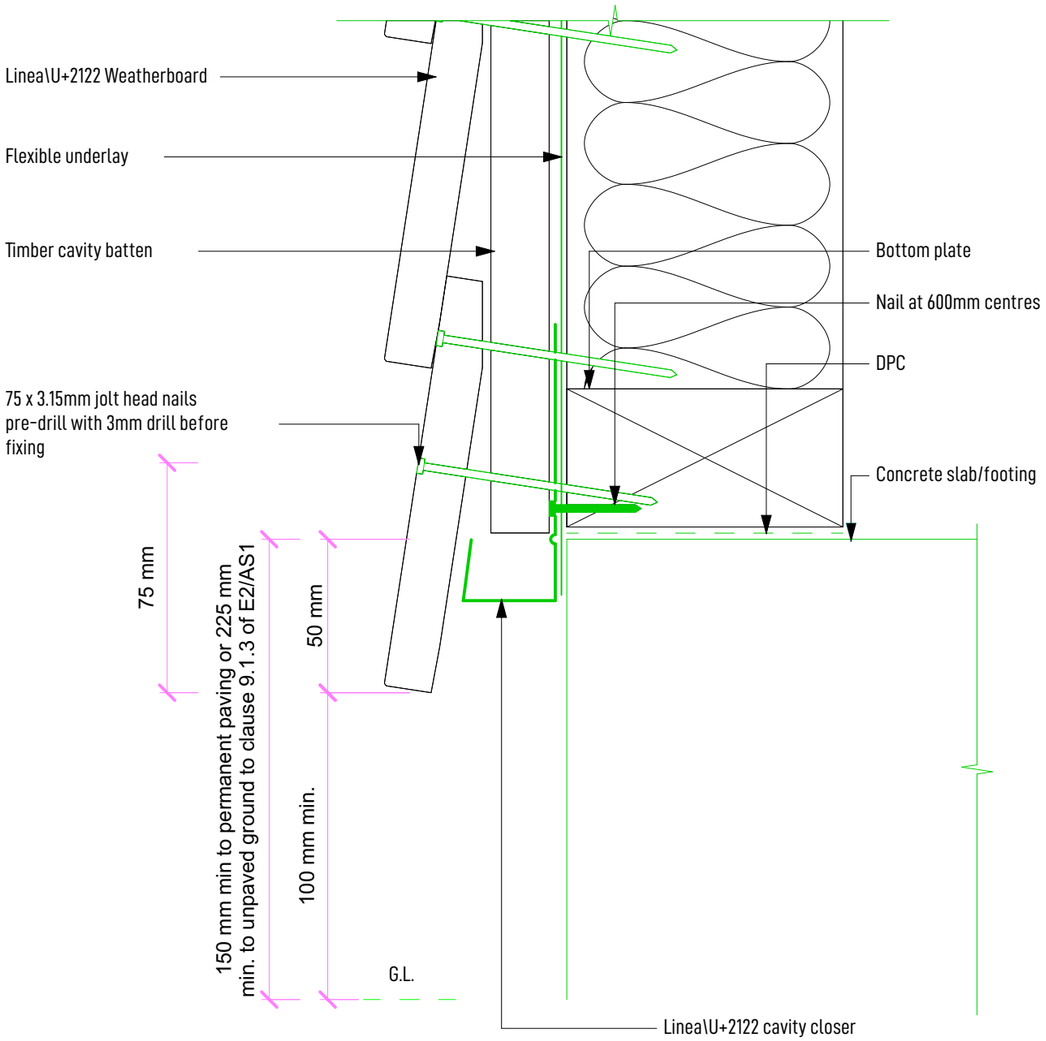

Note:
Drain holes in James Hardie uPVC vent strip are sufficient to achieve ventilation openings of 1000mm² per lineal metre

A . LINEA BASE
SCALE 1:2

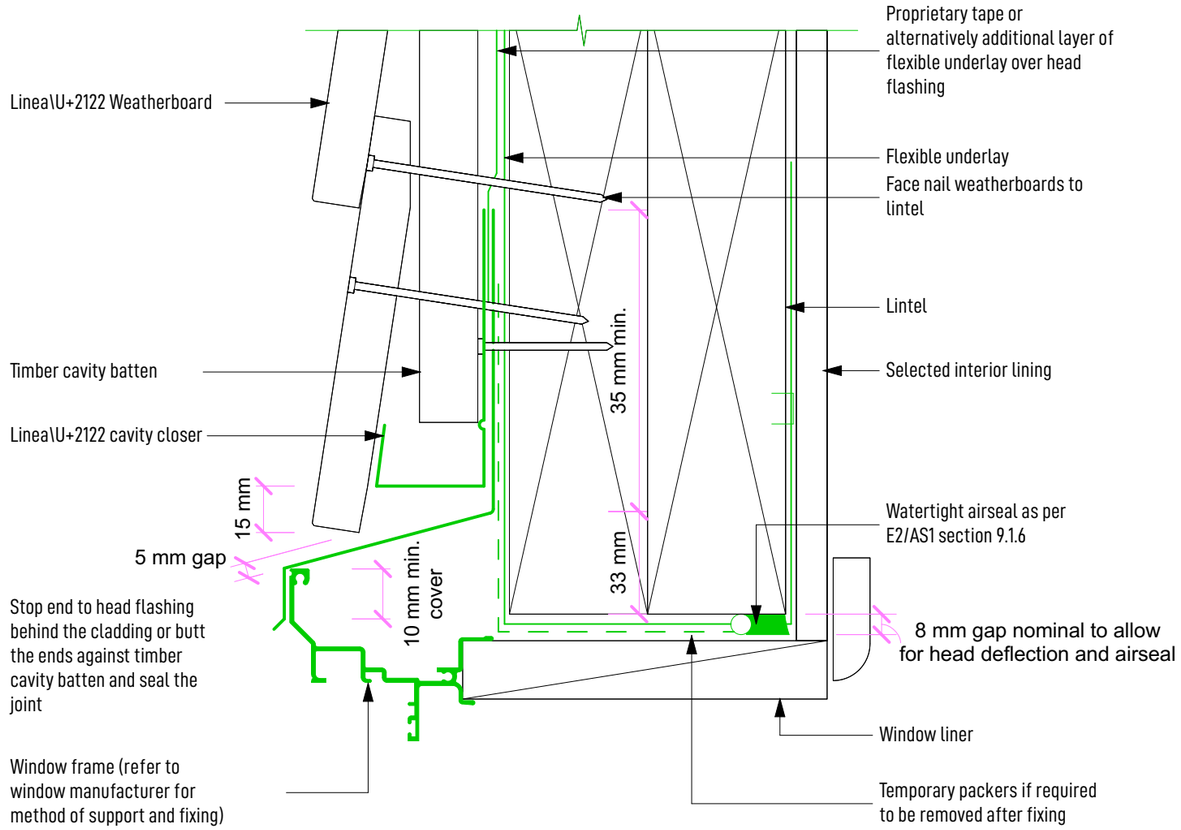

Note:
Sealant must be installed between head flashing and window flange in VH and EH wind zones and SED pressures
Alternatively, the head flashings can be formed with stop ends as per E2/AS1
Refer to Figure 22 for sealing end battens to head flashing
Site cut edges to be primed

B . LINEA WINDOW HEAD
SCALE 1:2

CONSENT PLANS

ANDERSON ARCHITECTURE
andersonarchitecture.co.nz
03 578 1448 // 027 823 7790

ALL MEASUREMENTS TO BE CONFIRMED ON SITE BY THE CONTRACTOR PRIOR TO THE COMMENCEMENT OF WORK
© Anderson Architecture. All rights reserved. No part of this work covered by copyright may be reproduced or copied in any form or by any means without the written permission of Anderson Architecture.

4 BEDROOM DWELLING
KELSEY & TIAAN KILIAN
93 CLAUSEN AVE, LEESTON

DETAILS

SCALE: 1:2	DRAWN: JASON	DATE: 1-04-2025

REV	DATE	AMENDMENT	JOB NO: 25103	
			DWG NO: F07	REV

SDC - Approved Building Consent Document - BC250732 - Pg 23 of 40 - 6/06/2025 - sandea

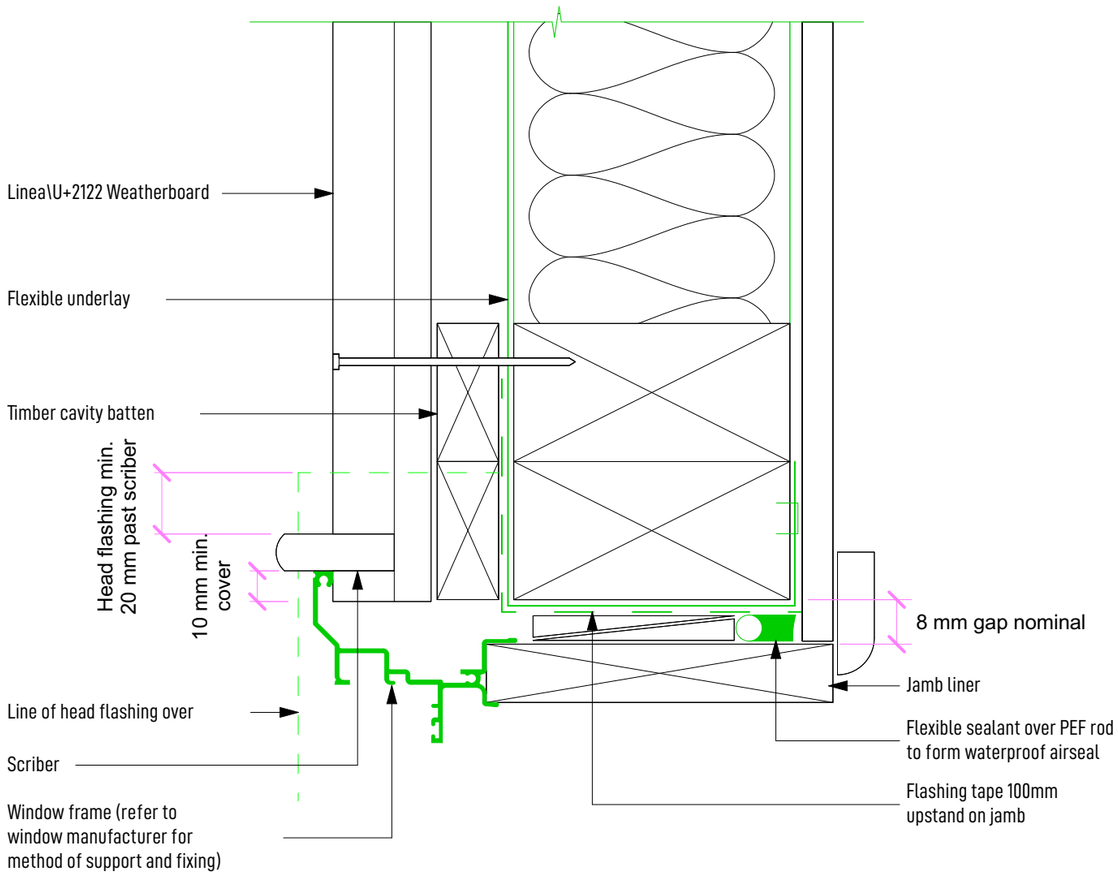

A
.
LINEA WINDOW JAMB
SCALE 1:2

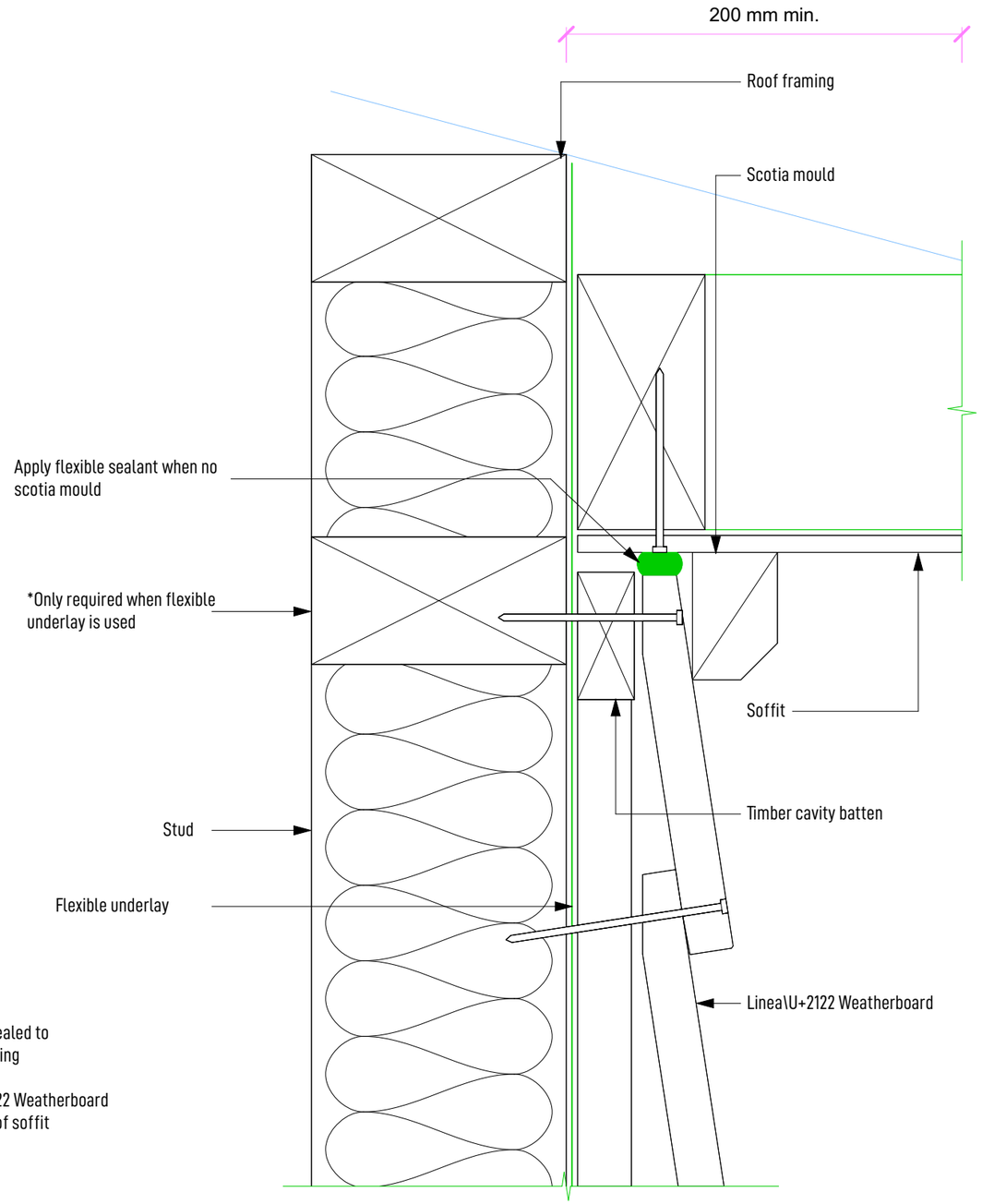

B
.
LINEA SOFFIT
SCALE 1:2

Note:
Alternatively the scotia can be scribed and sealed to Linea\U+2122 Weatherboard and the soffit lining

For soffits more than 200mm the Linea\U+2122 Weatherboard can be neat cut and silicone sealed to angle of soffit

CONSENT PLANS

ANDERSON ARCHITECTURE
andersonarchitecture.co.nz
03 578 1448 // 027 823 7790

ALL MEASUREMENTS TO BE CONFIRMED ON SITE BY THE CONTRACTOR PRIOR TO THE COMMENCEMENT OF WORK

© Anderson Architecture. All rights reserved. No part of this work covered by copyright may be reproduced or copied in any form or by any means without the written permission of Anderson Architecture.

4 BEDROOM DWELLING
KELSEY & TIAAN KILIAN
93 CLAUSEN AVE, LEESTON

DETAILS

SCALE: 1:2	DRAWN: JASON	DATE: 1-04-2025

REV	DATE	AMENDMENT	JOB NO: 25103	
			DWG NO: F08	REV

SDC - Approved Building Consent Document - BC250732 - Pg 24 of 40 - 6/06/2025 - sandea

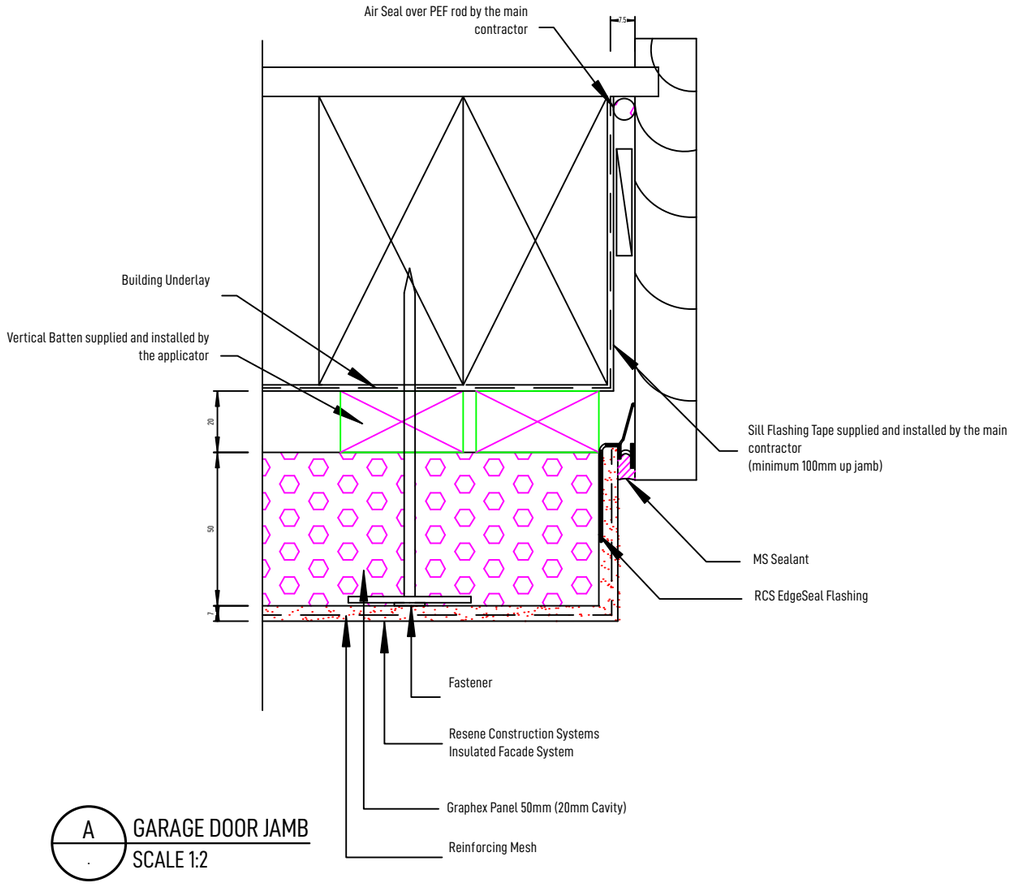

A GARAGE DOOR JAMB
SCALE 1:2

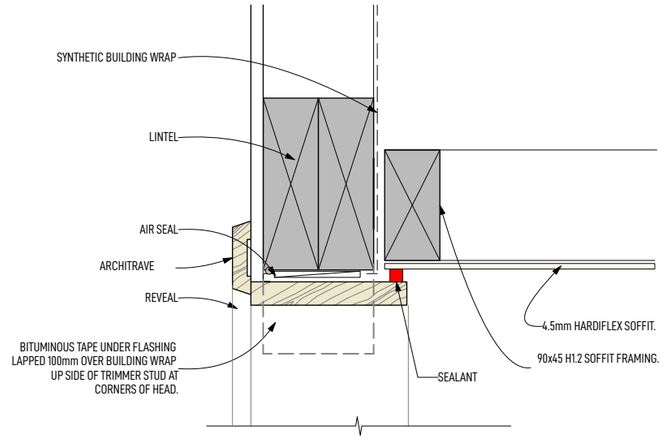

B GARAGE DOOR HEAD DETAIL
1:5

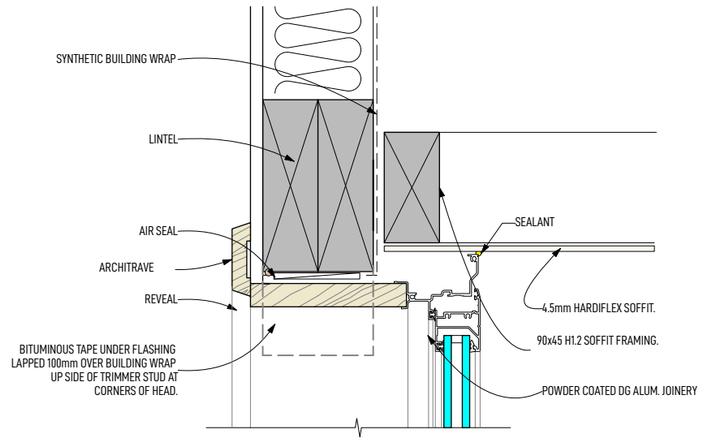

C HEAD DETAIL
1:5

CONSENT PLANS

ANDERSON ARCHITECTURE
andersonarchitecture.co.nz
03 578 1448 // 027 823 7790

ALL MEASUREMENTS TO BE CONFIRMED ON SITE BY THE CONTRACTOR PRIOR TO THE COMMENCEMENT OF WORK

© Anderson Architecture. All rights reserved. No part of this work covered by copyright may be reproduced or copied in any form or by any means without the written permission of Anderson Architecture.

4 BEDROOM DWELLING
KELSEY & TIAAN KILIAN
93 CLAUSEN AVE, LEESTON

DETAILS

SCALE: AS SHOWN	DRAWN: JASON	DATE: 1-04-2025

REV	DATE	AMENDMENT	JOB NO: 25103	
			DWG NO: F09	REV

SDC - Approved Building Consent Document - BC250732 - Pg 25 of 40 - 6/06/2025 - sandea

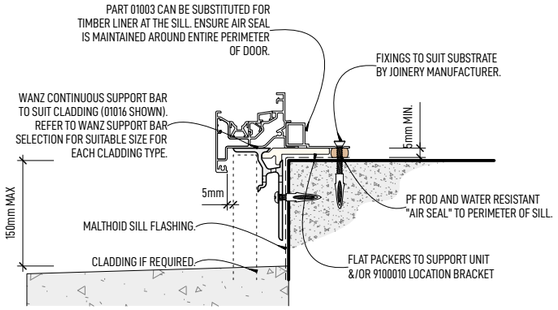

A DOOR SILL DETAIL - WANZ BAR
1:5

ALL WINDOWS SHALL BE DOUBLE GLAZED EXCLUDING GARAGE AND SHALL HAVE WANZ SUPPORT BARS PROVIDED BY JOINERY SUPPLIER TO ALL WINDOWS AND DOORS EXCEEDING 600mm IN WIDTH.

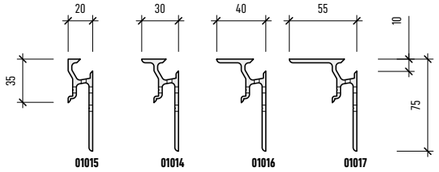

B WANZ SUPPORT BAR SELECTED
1:5

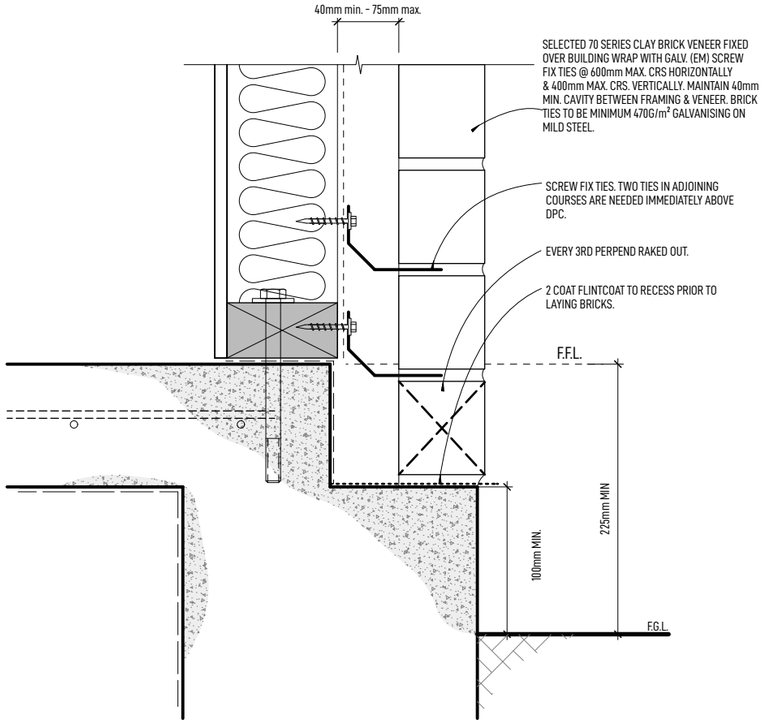

C BRICK VENEER BASE DETAIL
1:5

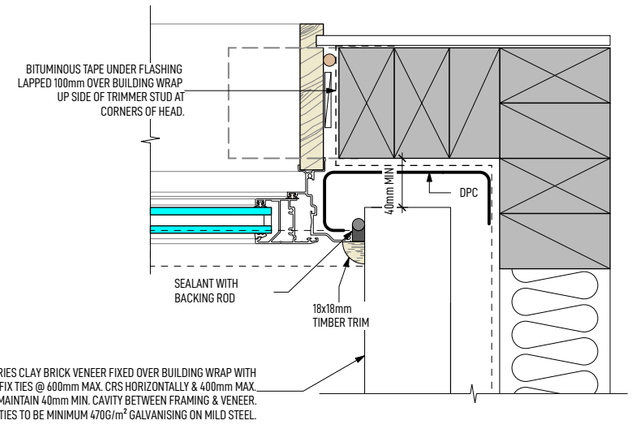

D INTERNAL CORNER JUNCTION DETAIL
1:5

CONSENT PLANS

ANDERSON ARCHITECTURE
andersonarchitecture.co.nz
03 578 1448 // 027 823 7790

ALL MEASUREMENTS TO BE CONFIRMED ON SITE BY THE CONTRACTOR PRIOR TO THE COMMENCEMENT OF WORK

© Anderson Architecture. All rights reserved. No part of this work covered by copyright may be reproduced or copied in any form or by any means without the written permission of Anderson Architecture.

4 BEDROOM DWELLING
KELSEY & TIAAN KILIAN
93 CLAUSEN AVE, LEESTON

DETAILS

SCALE: 1:2	DRAWN: JASON	DATE: 1-04-2025

REV	DATE	AMENDMENT	JOB NO: 25103	
			DWG NO: F10	REV

SDC - Approved Building Consent Document - BC250732 - Pg 26 of 40 - 6/06/2025 - sandea

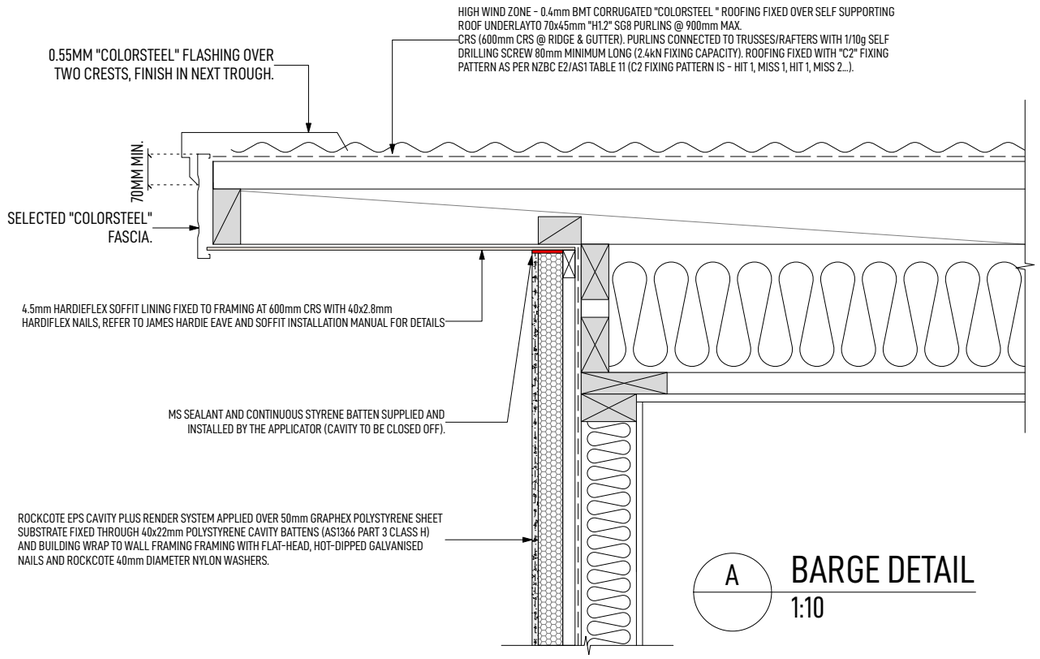

A BARGE DETAIL
1:10

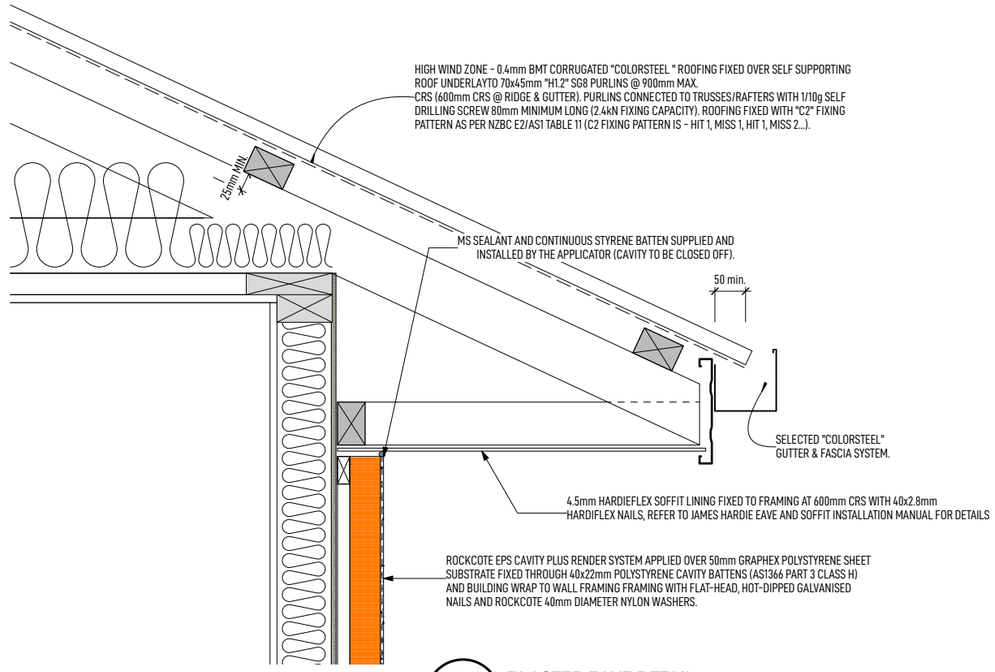

B PLASTER EAVE DETAIL
1:10

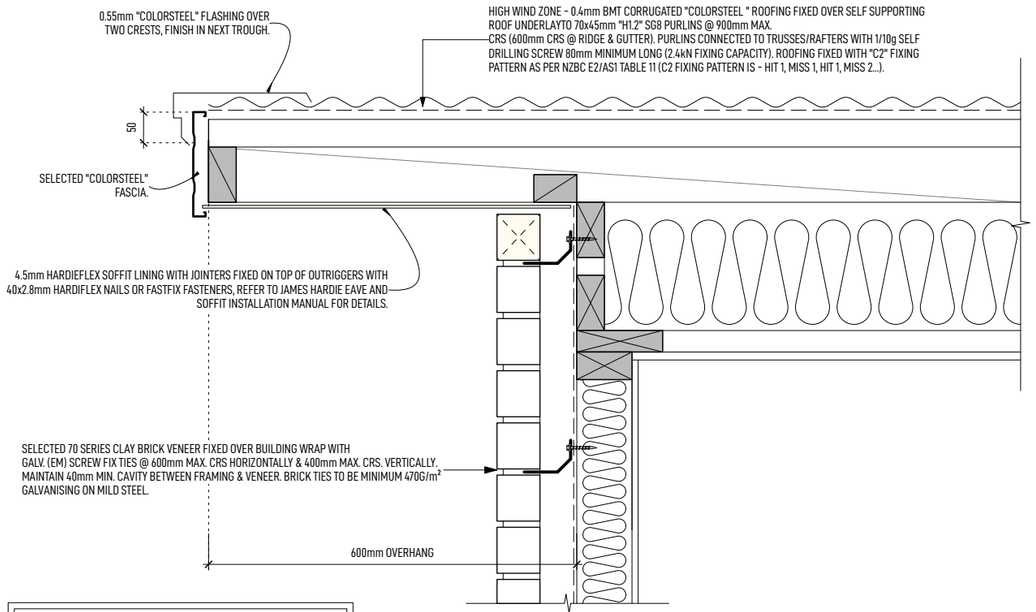

ALL BRICK GABLES WILL BE FINISHED WITH A RAKING SOLDIER COURSE OF BRICKS TO THE TOP COURSE.

C BRICK BARGE DETAIL
1:10

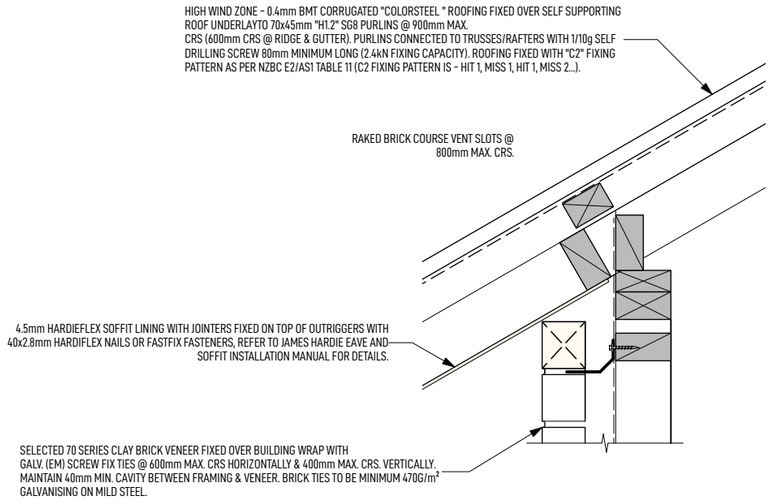

D BRICK VENEER EAVES DETAIL
1:10

CONSENT PLANS

ANDERSON ARCHITECTURE
andersonarchitecture.co.nz
03 578 1448 // 027 823 7790

ALL MEASUREMENTS TO BE CONFIRMED ON SITE BY THE CONTRACTOR PRIOR TO THE COMMENCEMENT OF WORK

© Anderson Architecture. All rights reserved. No part of this work covered by copyright may be reproduced or copied in any form or by any means without the written permission of Anderson Architecture.

4 BEDROOM DWELLING

KELSEY & TIAAN KILIAN

93 CLAUSEN AVE, LEESTON

DETAILS

SCALE: 1:10	DRAWN: JASON	DATE: 1-04-2025

REV	DATE	AMENDMENT	JOB NO: 25103	
			DWG NO: F11	REV

SDC - Approved Building Consent Document - BC250732 - Pg 27 of 40 - 6/06/2025 - sandea

NOTES

1. X = VARIABLE ACCORDING TO WIND ZONE, REFER TO ACCEPTABLE SOLUTION E2/AS1 TABLE 7.
2. Y = TO COVER MINIMUM OF TWO CRESTS
3. SUITABLE FOR PIPES FROM 60mm TO 500mm DIAMETER.

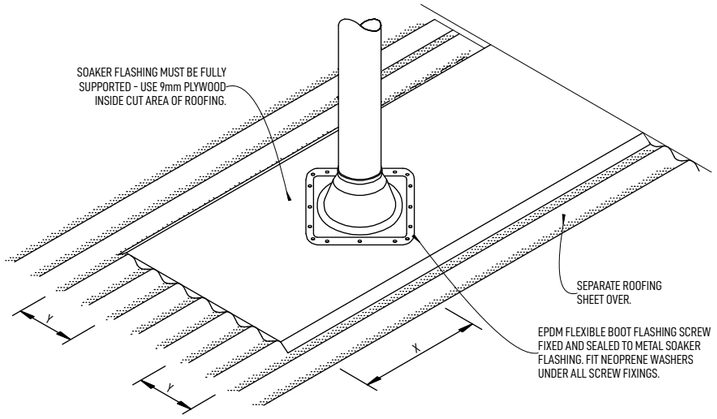

A SOAKER FLASHING FOR PIPE PENETRATIONS
n.t.s.

NOTES

1. X = VARIABLE ACCORDING TO WIND ZONE, REFER TO ACCEPTABLE SOLUTION E2/AS1 TABLE 7.

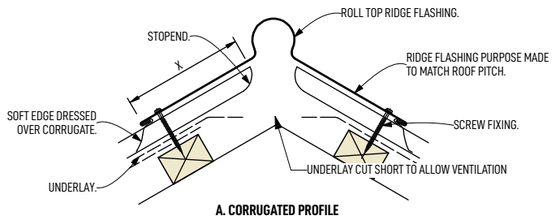

C PROFILED METAL RIDGE & HIP FLASHINGS
1:10

NOTE

1. MAX. ROOF PITCH FOR THIS FLASHING 45°, MINIMUM PITCH 10°.
2. FOR PIPES UPTO 60mm DIAMETER.

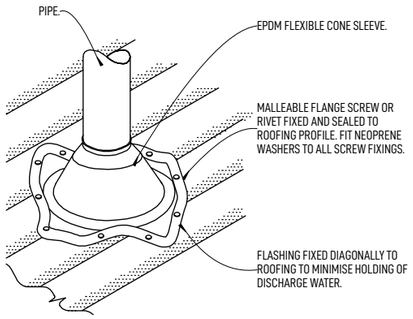

B FLASHING FOR SMALL PIPES
n.t.s.

NOTES

1. REFER TO TABLE 8 FOR MAXIMUM ROOF CATCHMENT AREAS FOR VALLEY GUTTERS.
2. MINIMUM WIDTH OF VALLEY GUTTER MAY REDUCE TO 160mm, PROVIDING ROOF CATCHMENT AREA IS IN ACCORDANCE WITH TABLE 8. IN THIS CASE, COVER OF ROOF CLADDING OVER GUTTER SHALL BE REDUCED TO 60mm TO PROVIDE A CLEARANCE GAP OF 40mm.

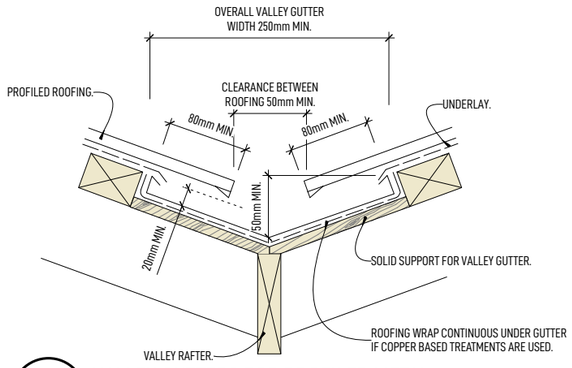

D VALLEY GUTTERS FOR PROFILED METAL
n.t.s.

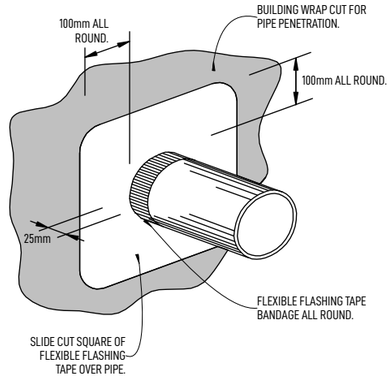

E GENERAL WALL PENETRATION
n.t.s.

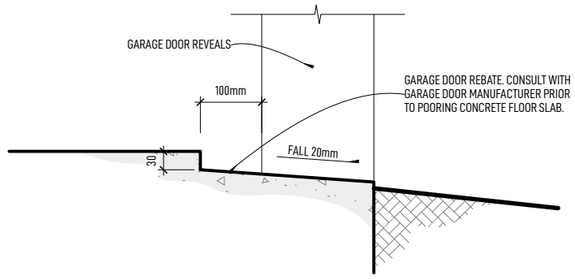

F SECTIONAL DOOR
NTS

CONSENT PLANS

ANDERSON ARCHITECTURE
andersonarchitecture.co.nz
03 578 1448 // 027 823 7790

ALL MEASUREMENTS TO BE CONFIRMED ON SITE BY THE CONTRACTOR PRIOR TO THE COMMENCEMENT OF WORK

© Anderson Architecture. All rights reserved. No part of this work covered by copyright may be reproduced or copied in any form or by any means without the written permission of Anderson Architecture.

4 BEDROOM DWELLING
KELSEY & TIAAN KILIAN
93 CLAUSEN AVE, LEESTON

DETAILS

SCALE: AS SHOWN	DRAWN: JASON	DATE: 1-04-2025

REV	DATE	AMENDMENT	JOB NO: 25103	
			DWG NO: F12	REV

SDC - Approved Building Consent Document - BC250732 - Pg 28 of 40 - 6/06/2025 - sandea

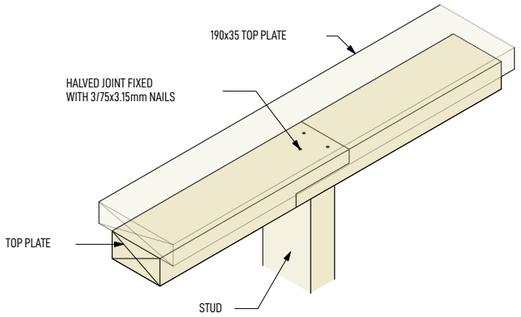

WALLS NOT CONTAINING BRACING

B . TOP PLATE CONNECTION
1:10

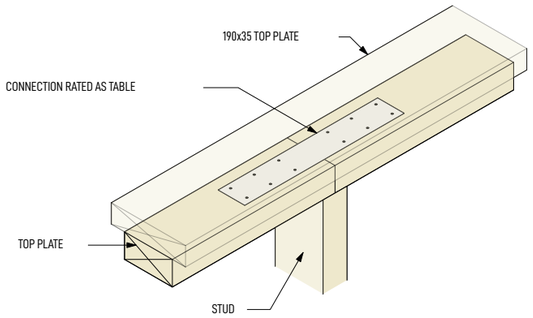

WALLS CONTAINING BRACING

CAPACITIES OF METAL PLATE JOINTS	
UP TO 3KN	3/30x3.15mm NAILS PER SIDE
UP TO 6KN	6/30x3.15mm NAILS PER SIDE

C . TOP PLATE CONNECTION
1:10

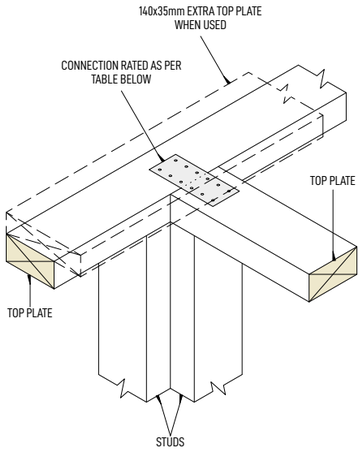

(A) BUTT JOINT

CAPACITIES OF METAL PLATE JOINTS	
UP TO 3kN	3/ 30x3.15mm NAILS PER SIDE
UP TO 6kN	6/ 30x3.15mm NAILS PER SIDE

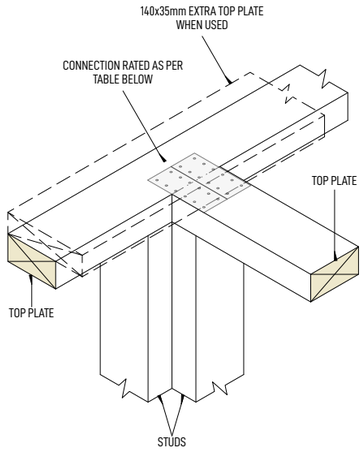

(B) BUTT JOINT

CAPACITIES OF METAL PLATE JOINTS	
UP TO 12kN	2 x SHEET BRACE STRAPS FIXED WITH 6 x LUMBERLOCK PRODUCT NAILS 30mmx 3.15 DIA PER END PER STRAP

D CONNECTING TOP PLATES TO EXTERNAL WALLS
WALLS CONTAINING BRACING - not to scale

BEDDING AND BACKFILLING

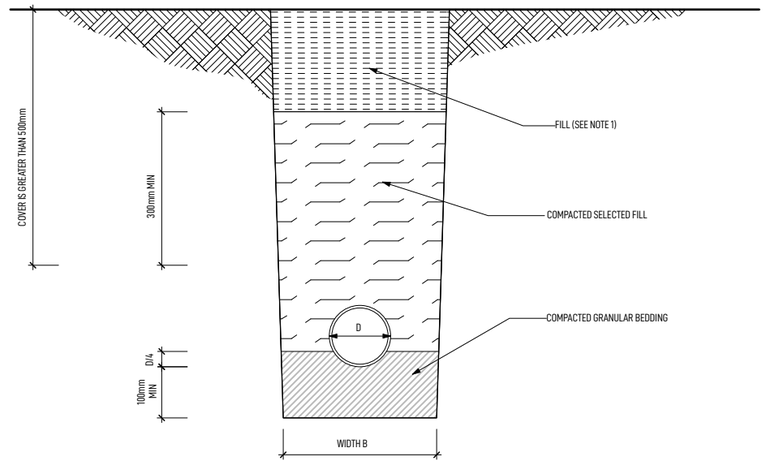

(a) COVER GREATER THAN 500mm

BEDDING TYPE 'B'

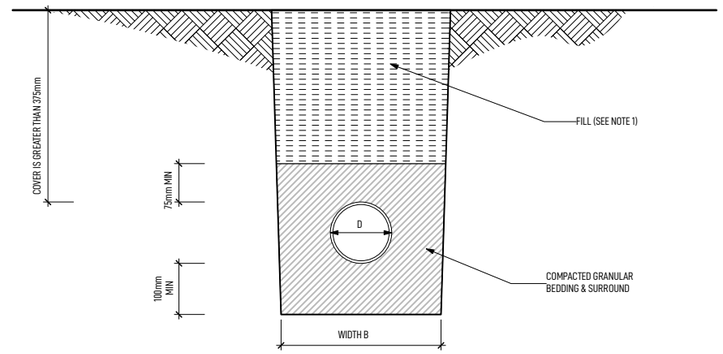

(b) COVER GREATER THAN 375mm

BEDDING TYPE 'D'

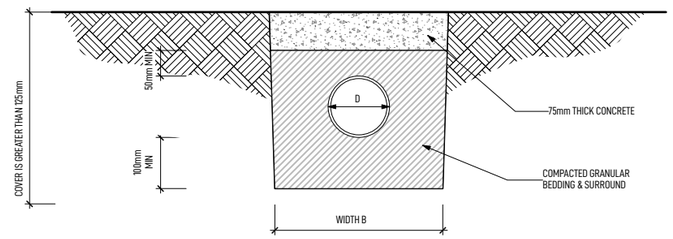

(c) COVER GREATER THAN 125mm

NOTE:
1. FILL SHALL BE
- ORDINARY FILL WHERE DRAINS ARE LOCATED BELOW GARDENS AND OPEN COUNTRY.
- COMPACTED SELECTED FILL WHERE THE DRAINS ARE LOCATED BELOW RESIDENTAL DRIVEWAYS AND SIMILAR AREAS SUBJECTED TO LIGHT TRAFFIC.

CONSENT PLANS

ANDERSON ARCHITECTURE
andersonarchitecture.co.nz
03 578 1448 // 027 823 7790

ALL MEASUREMENTS TO BE CONFIRMED ON SITE BY THE CONTRACTOR PRIOR TO THE COMMENCEMENT OF WORK

© Anderson Architecture. All rights reserved. No part of this work covered by copyright may be reproduced or copied in any form or by any means without the written permission of Anderson Architecture.

4 BEDROOM DWELLING
KELSEY & TIAAN KILIAN
93 CLAUSEN AVE, LEESTON

DETAILS

SCALE: AS SHOWN	DRAWN: JASON	DATE: 1-04-2025

REV	DATE	AMENDMENT	JOB NO: 25103	
			DWG NO: F13	REV

SDC - Approved Building Consent Document - BC250732 - Pg 29 of 40 - 6/06/2025 - sandea

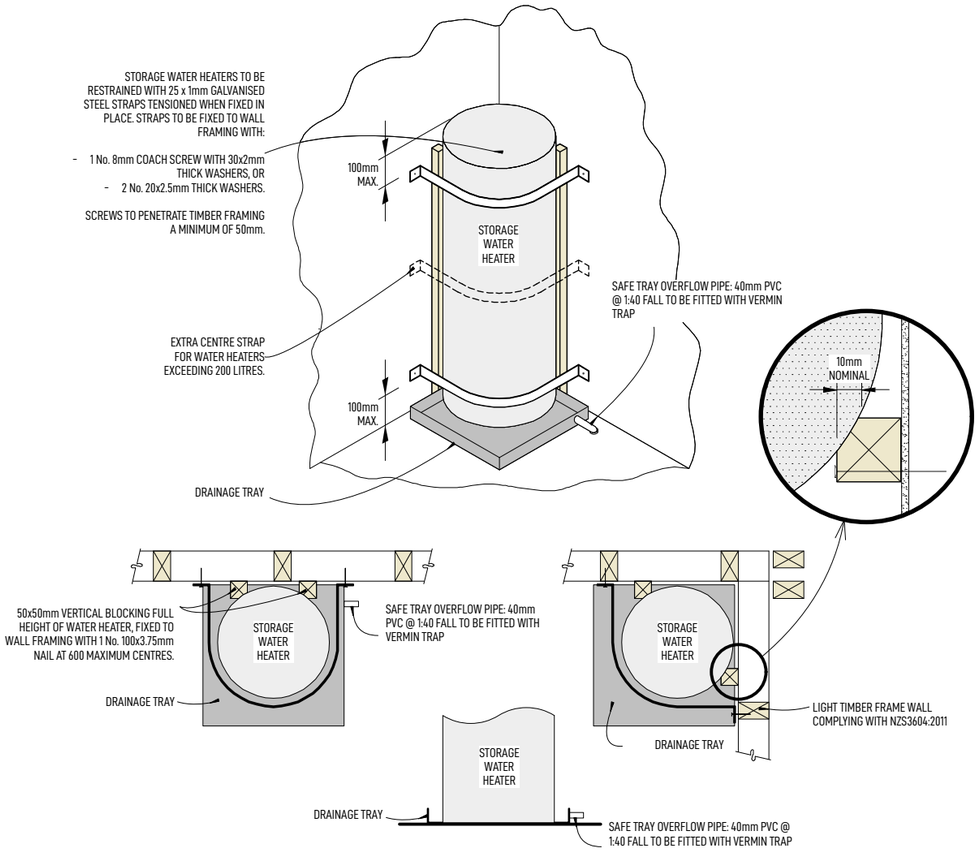

B SEISMIC RESTRAINT OF WATER HEATERS WITH DRAINAGE TRAY
n.t.s.

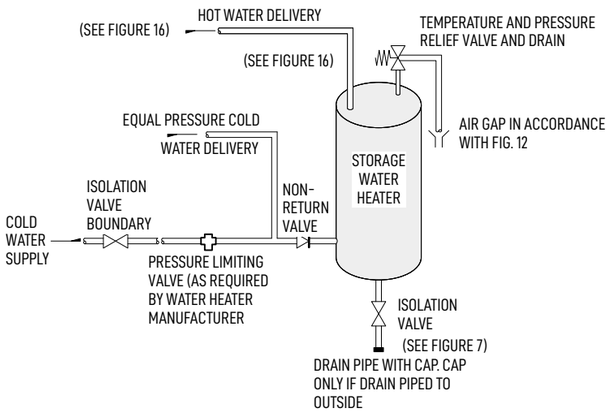

B MAINS PRESSURE STORAGE WATER HEATER (UNVENTED)
n.t.s.

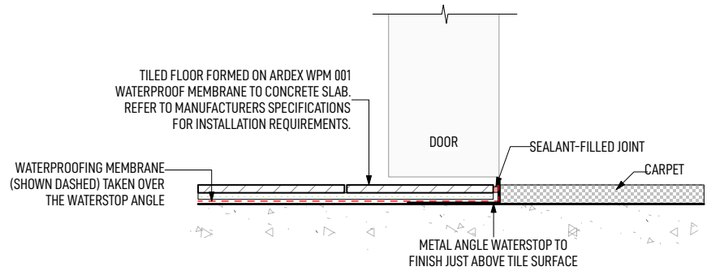

1 TILE WATERSTOP AT DOOR DETAIL
SCALE 1:5

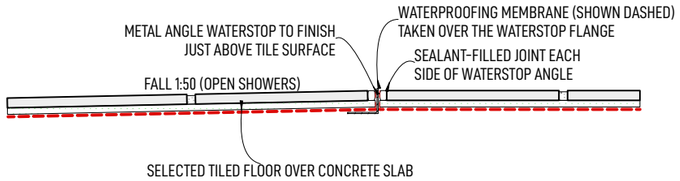

H TILED FLOOR WATERSTOP DETAIL
SCALE 1:5

CONSENT PLANS

ANDERSON ARCHITECTURE
andersonarchitecture.co.nz
03 578 1448 // 027 823 7790

ALL MEASUREMENTS TO BE CONFIRMED ON SITE BY THE CONTRACTOR PRIOR TO THE COMMENCEMENT OF WORK

© Anderson Architecture. All rights reserved. No part of this work covered by copyright may be reproduced or copied in any form or by any means without the written permission of Anderson Architecture.

4 BEDROOM DWELLING
KELSEY & TIAAN KILIAN
93 CLAUSEN AVE, LEESTON

DETAILS

SCALE: AS SHOWN	DRAWN: JASON	DATE: 1-04-2025

REV	DATE	AMENDMENT	JOB NO: 25103	
			DWG NO: F14	REV

SDC - Approved Building Consent Document - BC250732 - Pg 30 of 40 - 6/06/2025 - sandea

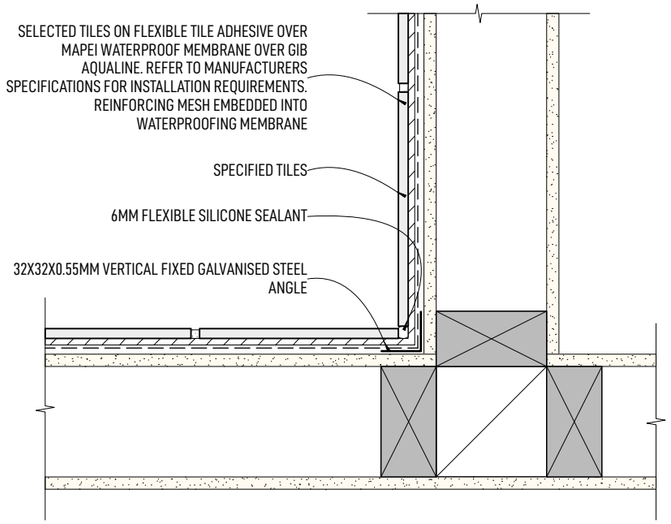

A BATH WALL CORNER DETAIL
SCALE 1:5

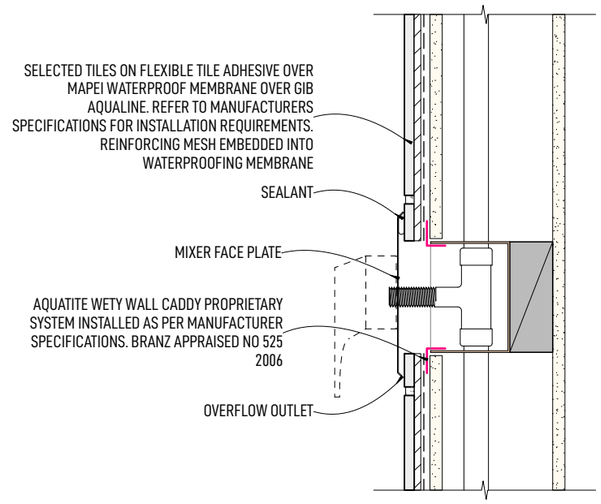

B BATH MIXER DETAIL
SCALE 1:5

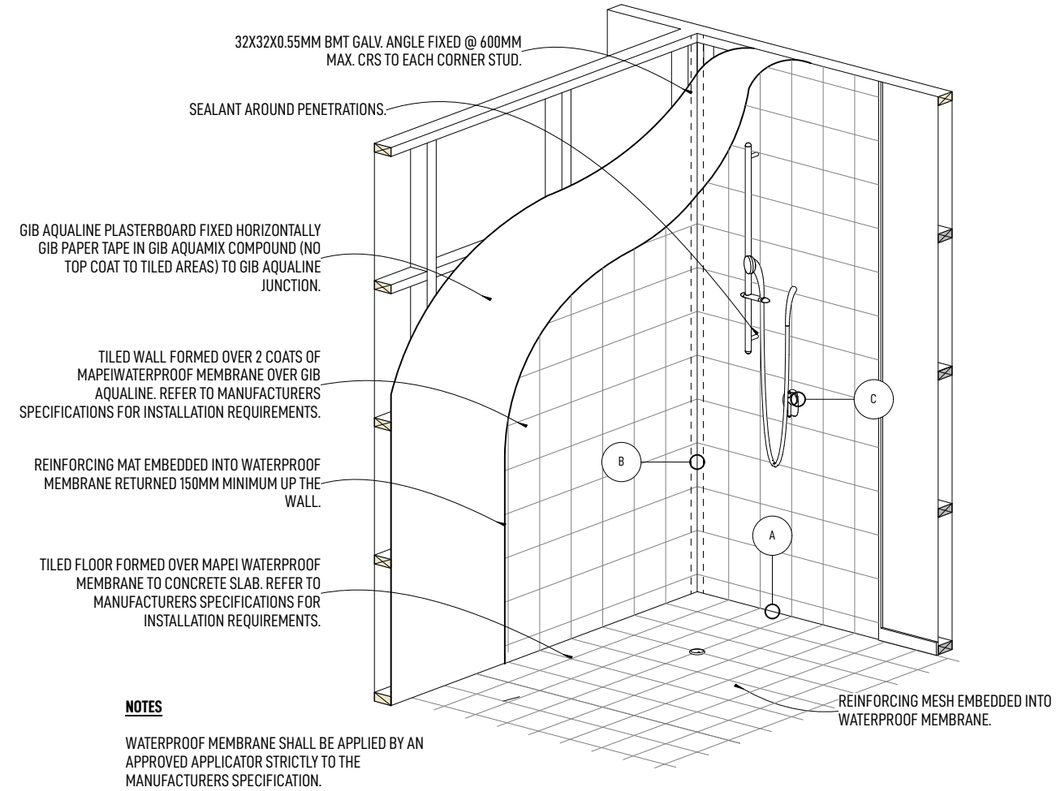

NOTES

WATERPROOF MEMBRANE SHALL BE APPLIED BY AN APPROVED APPLICATOR STRICTLY TO THE MANUFACTURERS SPECIFICATION.

C TILED SHOWER DETAIL
NTS

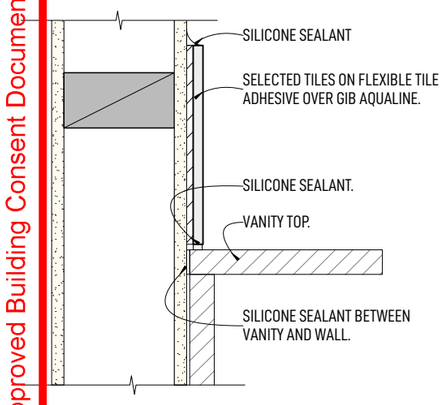

D VANITY TOP DETAIL
SCALE 1:5

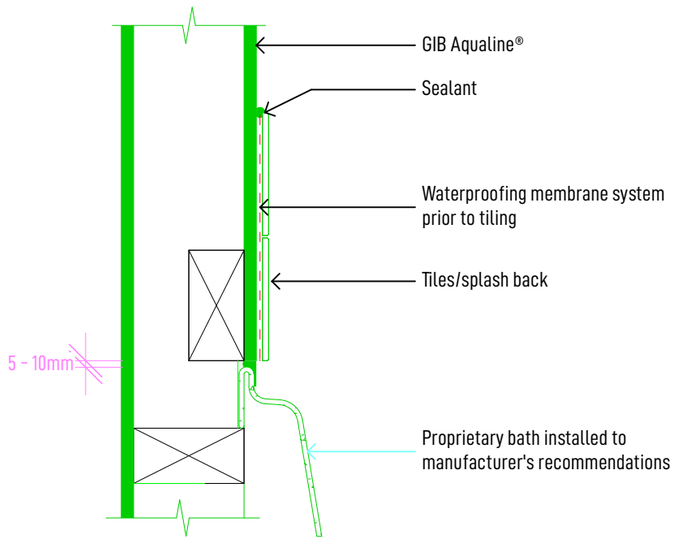

G BATH DETAIL
SCALE 1:5

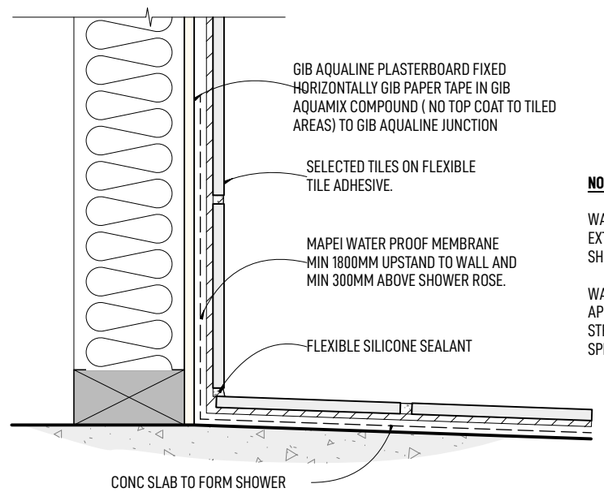

NOTES

WATERPROOF FLOOR MEMBRANE TO EXTEND MIN 500MM OUTSIDE OF SHOWER AREA.

WATERPROOF MEMBRANE SHALL BE APPLIED BY AN APPROVED APPLICATOR STRICTLY TO THE MANUFACTURERS SPECIFICATION.

E FORMED FLOOR SHOWER - CONCRETE FLOOR
1:5

CONSENT PLANS

ANDERSON ARCHITECTURE
andersonarchitecture.co.nz
03 578 1448 // 027 823 7790

ALL MEASUREMENTS TO BE CONFIRMED ON SITE BY THE CONTRACTOR PRIOR TO THE COMMENCEMENT OF WORK

© Anderson Architecture. All rights reserved. No part of this work covered by copyright may be reproduced or copied in any form or by any means without the written permission of Anderson Architecture.

4 BEDROOM DWELLING
KELSEY & TIAAN KILIAN
93 CLAUSEN AVE, LEESTON

DETAILS

SCALE: 1:5	DRAWN: JASON	DATE: 1-04-2025

REV	DATE	AMENDMENT	JOB NO: 25103	
			DWG NO: F15	REV

SDC - Approved Building Consent Document - BC250732 - Pg 31 of 40 - 6/06/2025 - sandea

GENERAL

1. These drawings are not to be used for construction until the plan (sheet S2) is signed by the main contractor

2. Do not scale. refer any discrepancies to the architect/engineer.

3. These drawings are to be read in conjunction with the Architects & Engineers drawings.

4. The builder shall be responsible for any damage to works during construction.

5. The sand blinding layer shall be 20mm min. & 50mm max. to aid levelling & to prevent rocking of pods.

6. Vapour barrier to be 0.25mm (250 micron) polythene complying with NZS 4229. / NZS 3604

7. Finished ground level adjacent to slab to be protected from wind, water erosion and undermining.

FOUNDATIONS

1. For assumed allowable bearing capacity refer to calculations/installer guide. Unless otherwise noted in documentation

2. If there is any doubt about the integrity of the material on which the slab is to be founded - a FIRTH representative must be notified immediately.

CONCRETE

1. All workmanship & materials to conform to NZS 3109, NZS 4210 & local authority regulations.

2. Minimum covers to reinforcement:

- Exposed to earth - 75mm.
- Protected by vapour barrier - 50mm.
- Not exposed to weather except for a brief period during construction - 25mm.

3. No holes or chases other than those specified are to be made in the slab without the approval of the Engineer.

4. All concrete shall be FIRTH 20 MPa (unless Sea Spray Zone when 25 MPa shall be used) having 20mm nominal maximum agg. size & 80mm slump, all to comply with NZS 3109.

5. All concrete to be mechanically vibrated & carefully worked around the reinforcement & into the corners of the formwork.

INSPECTIONS

1. Pre-pour inspections are to be carried out by Firth Industries on behalf of EngCo Ltd

STEEL

1. All reinforcing shall be new Zealand sourced and conform to AS/NZS 4671 :2001 in grade 300 or grade 500E.

2. All bends to be made cold without fracture.

3. All reinforcing shall be deformed type unless otherwise stated.

4. Grade 500E deformed bars shall be designated 'H', Grade 300 deformed bars shall be designated 'D' and Grade 300 round bars shall be designated 'R'

5. Minimum bar splice 720mm. (or unless otherwide noted)

6. All reinforcement to be fixed & tied where necessary in its specified position.

7. Welding of steel is not permitted

8. Spacers:

- Edge at 1200mm ctrs (one on edge & two on corners, typically).
- Internal one on each side of pod (typically).
- 25/40 or similar mesh chair to be used as necessary.

9. All mesh shall comply with AS/NZS 4671 & shall conform with elongation requirements exceeding 10%.

10. All Mesh shall lap a minimum of 225 m.m. or 1 grid + 50 m.m. (which ever is greater.)

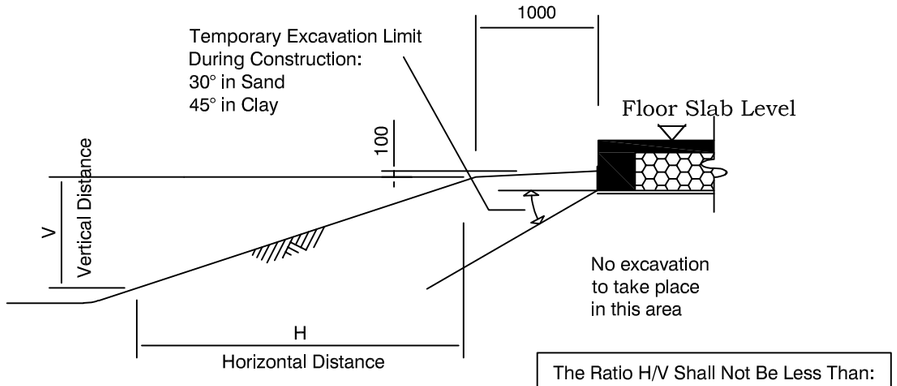

The Ratio H/V Shall Not Be Less Than:
a. 1 in Rock
b. 2 in Clay
c. 3 in Other Materials

SLOPING GROUND LIMITATIONS

N.T.S.

Refer to "FIRTH RIBRAFT FLOOR SYSTEM" - SECTION 2: Site Requirements (Pages 15-16)

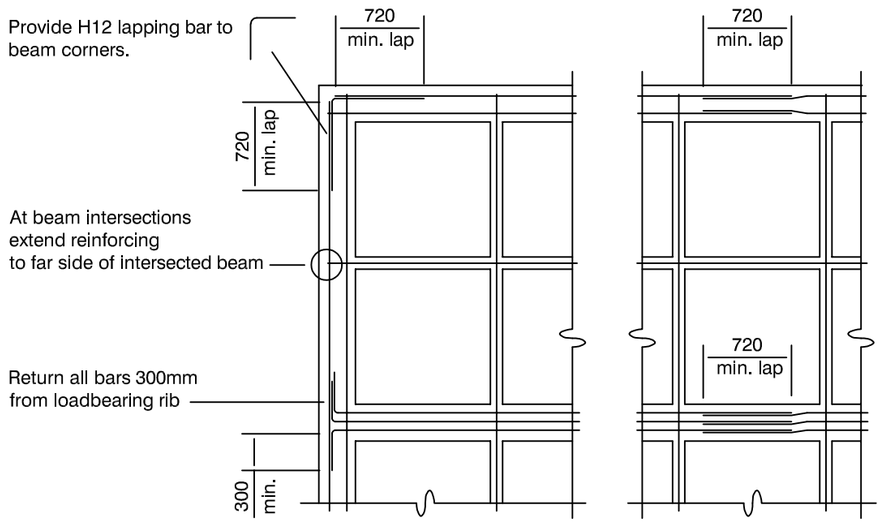

TYPICAL CORNER STEEL & MIN. LAPPING REQUIREMENTS

N.T.S.

RIBRAFT FLOORS™
Building System By
Firth
LEADING BY DESIGN

© COPYRIGHT FIRTH INDUSTRIES LTD 1996.

NOTES:

THIS RIBRAFT FLOOR SLAB HAS BEEN DESIGNED IN ACCORDANCE WITH NZS 3604, NZS 4229 & THE "RIBRAFT FLOOR APPRAISAL" PREPARED BY WORKS CONSULTANCY SERVICES LTD FOR FIRTH INDUSTRIES LTD.

JOB TITLE:

Kilian
93 Clausen Avenue
Leeston

SHEET TITLE:

NOTES

DESIGNED:	EngCo Ltd	DRAWN:	M.R.H.
SCALES: (in A3)	1:100	CAD DWG.:	
		DATE:	24.03.25
DWG NO.	S1		

SDC - Approved Building Consent Document - BC250732 - Pg 32 of 40 - 6/06/2025 - sandea

This floor to be constructed on a site that has been excavated to a depth instructed by a Consultant engaged by the Client that removes all traces of topsoil and provides a 200 kPa ultimate bearing pressure at the excavated surface.
Guidance as to the extent of the excavation shall be taken from the GeoTechnical report by Baseline Group Christchurch Limited
The excavated site shall then be re-instated to the underside of the slab using engineered compacted fill plus 25mm nom. sand blinding.
Upon completion the Consultant is to provide written sign off as to the suitability of the completed platform for the subsequent construction of the Ribraft as designed

Locations shown of internal floor beam thickenings are indicative only. It shall be the responsibility of the Contractor to ensure that they are located centrally under the load bearing walls to which they pertain

This drawing is to be read in conjunction with the Contract drawings for details of all floor slab set downs, steps, rebates, holding down bolts, cast in componentry and the like

300mm wide x 305mm deep foundation - typical U.N.O.
3 no. HD12's - 2 to bottom, 1 to u/side of ductile mesh
each 100mm rib to have HD12 to bottom
300mm wide floor beam thickenings to have 3 no. HD12's to bottom

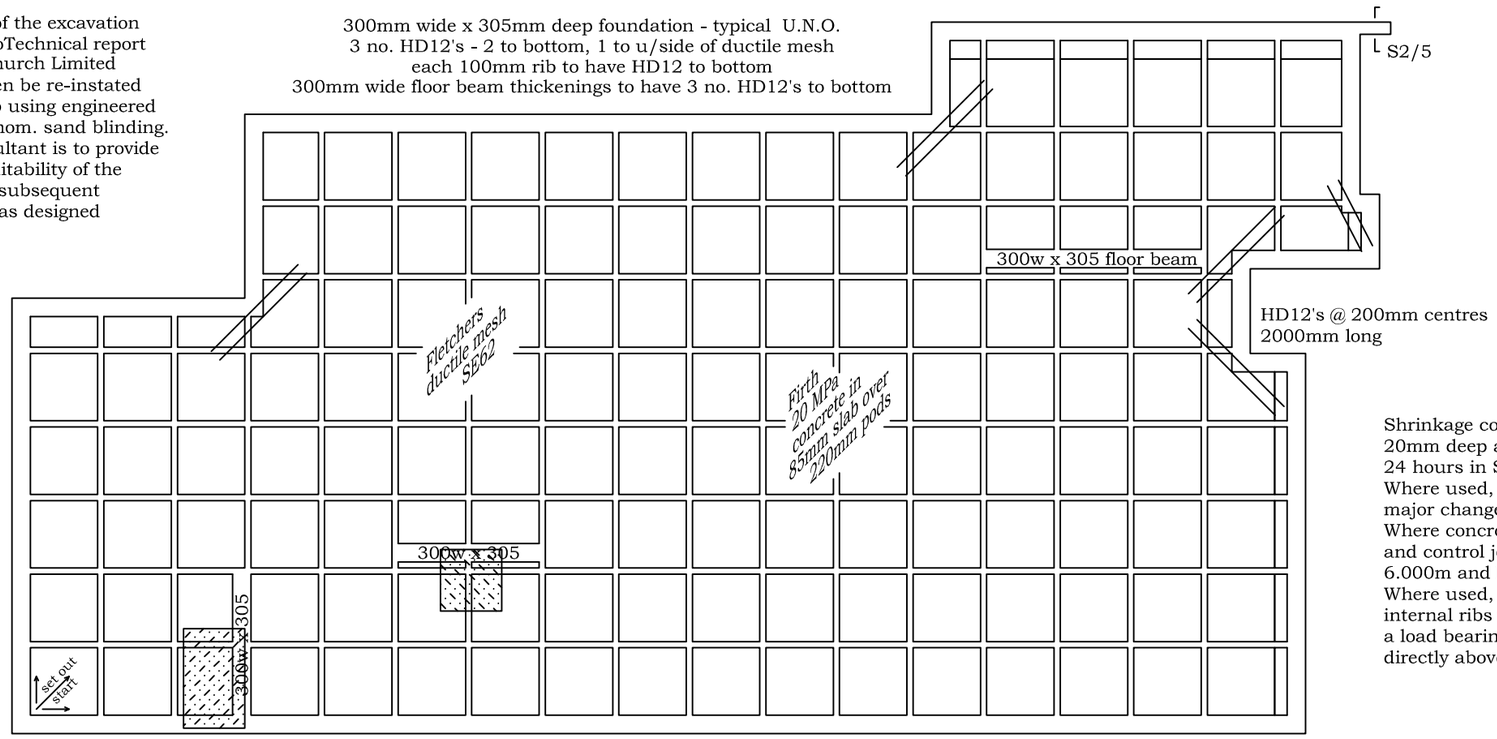

Shrinkage control joints, where the option is chosen, shall be 20mm deep and cut after hardening but no later than 24 hours in Summer and 48 hours in Winter.
Where used, such joints shall be positioned to coincide with major changes in the floor plan.
Where concrete is to be exposed or have a thin, brittle, overlay and control joints are chosen, the maximum bay size shall be 6.000m and have a length to width ratio of 2:1.
Where used, control joints shall be positioned over 100mm internal ribs wherever possible and where they coincide with a load bearing floor beam thickening they should be positioned directly above one edge of the beam.

indicates 1000 x 1620 shower floor recess - refer Architect's drawings for exact size and location

indicates 1000 x 1000 shower floor recess - refer Architect's drawings for exact size and location

Vertical or horizontal penetrations through the foundation edge beam or floor beam thickenings must be made through the middle third of the member - refer Firth Ribraft Technical Solutions manual for specific information. Vertical penetrations should not be made through 100mm ribs

Under no circumstance should pipework for services be run longitudinally in 100mm ribs. Similarly they should not be run along perimeter foundations nor internal floor beam thickenings

RIBRAFT FLOORS™
Building System By
Firth
LEADING BY DESIGN

© COPYRIGHT FIRTH INDUSTRIES LTD 1996.

NOTES:

THIS RIBRAFT FLOOR SLAB HAS BEEN DESIGNED IN ACCORDANCE WITH NZS 3604, NZS 4229 & THE "RIBRAFT FLOOR APPRAISAL" PREPARED BY WORKS CONSULTANCY SERVICES LTD FOR FIRTH INDUSTRIES LTD.

JOB TITLE:

Kilian
93 Clausen Avenue
Leeston

SHEET TITLE:

Pod Layout
and
Foundation Plan

DESIGNED:	EngCo Ltd	DRAWN:	M.R.H.
SCALES: (in A3)	1:100	CAD DWG.:	
		DATE:	24.03.25
DWG NO.	S2		

SDC - Approved Building Consent Document - BC250732 - Pg 33 of 40 - 6/06/2025 - sandea

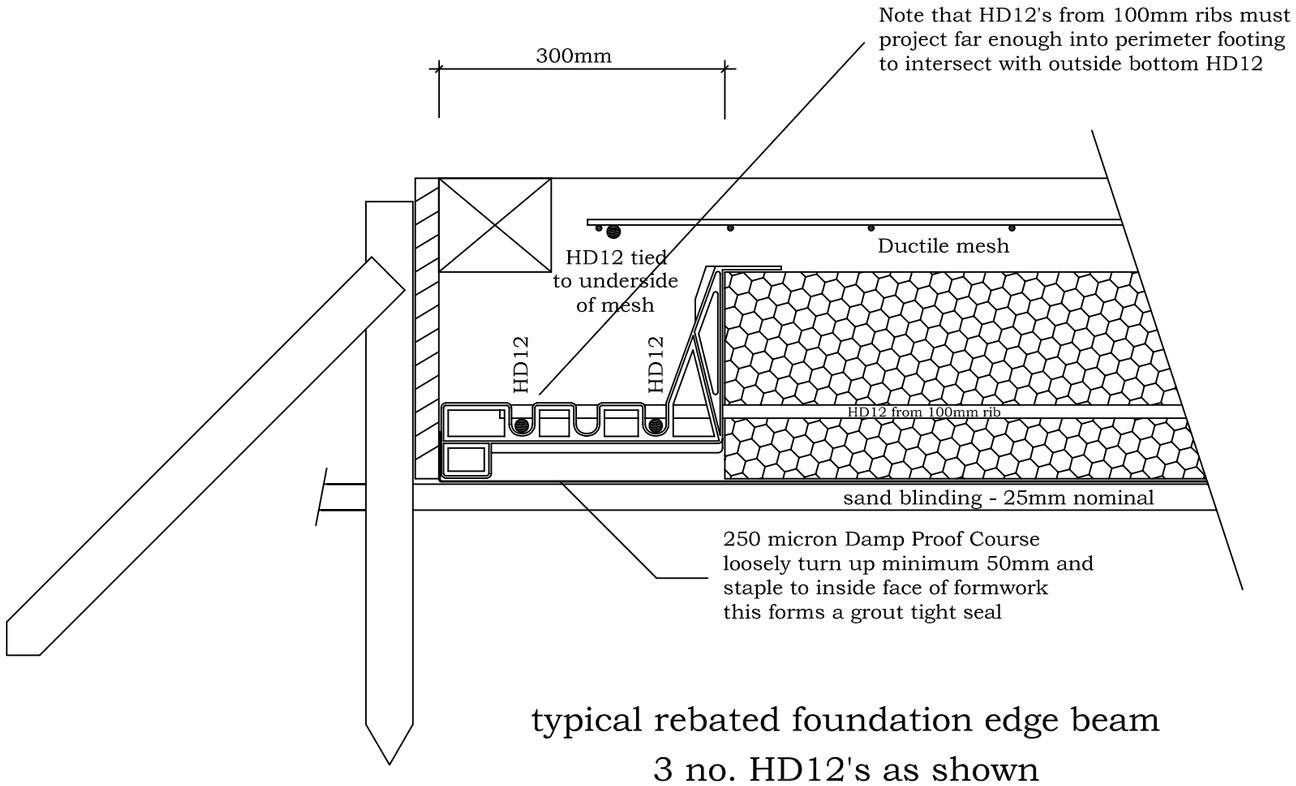

typical rebated foundation edge beam
3 no. HD12's as shown

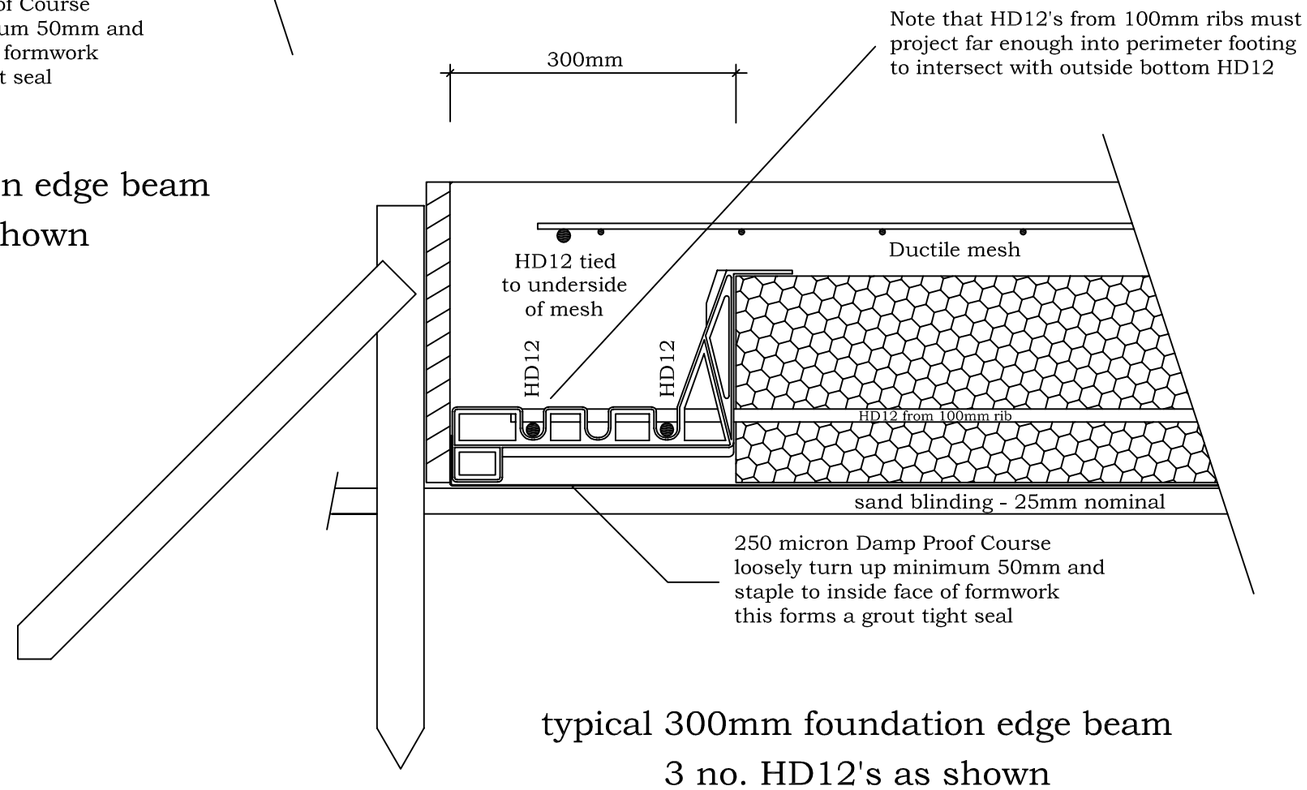

typical 300mm foundation edge beam
3 no. HD12's as shown

RIBRAFT FLOORS™
Building System By
Firth
LEADING BY DESIGN

©COPYRIGHT FIRTH INDUSTRIES LTD 1996.

NOTES:

THIS RIBRAFT FLOOR SLAB HAS BEEN DESIGNED IN ACCORDANCE WITH NZS 3604, NZS 4229 & THE "RIBRAFT FLOOR APPRAISAL" PREPARED BY WORKS CONSULTANCY SERVICES LTD FOR FIRTH INDUSTRIES LTD.

JOB TITLE:

Kilian
93 Clausen Avenue
Leeston

SHEET TITLE:

300mm
edge beam
detail

DESIGNED:

DRAWN: M.R.H.

SCALES: n/a
(in A3)

CAD DWG.:

DATE: 14.05.07

DWG NO. S2/1

SDC - Approved Building Consent Document - BC250732 - Pg 34 of 40 - 6/06/2025 - sandea

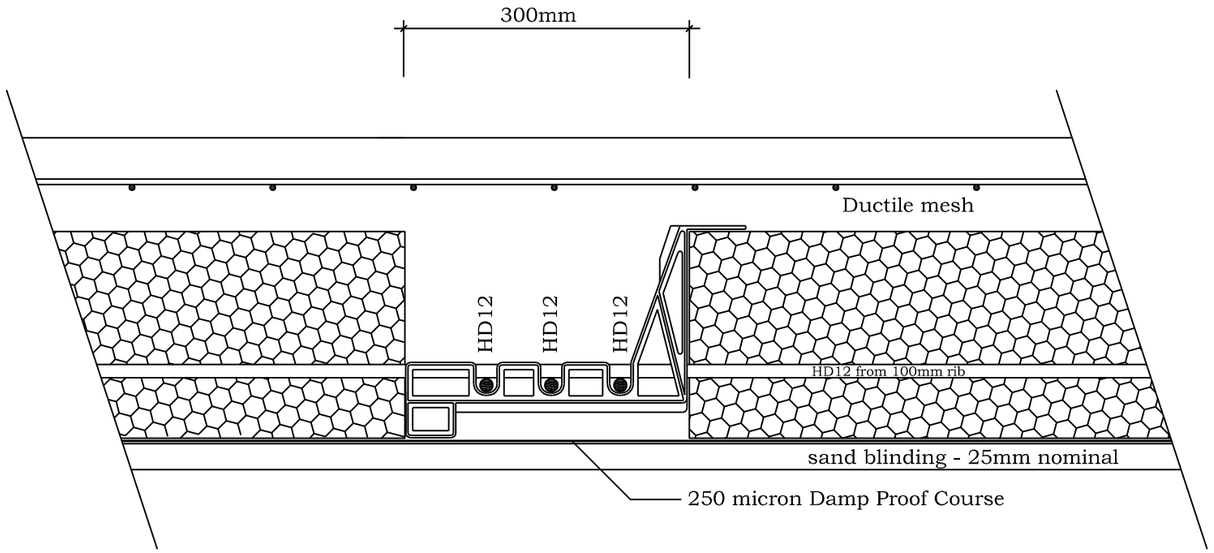

typical 300mm floor beam thickening
3 no. HD12's as shown

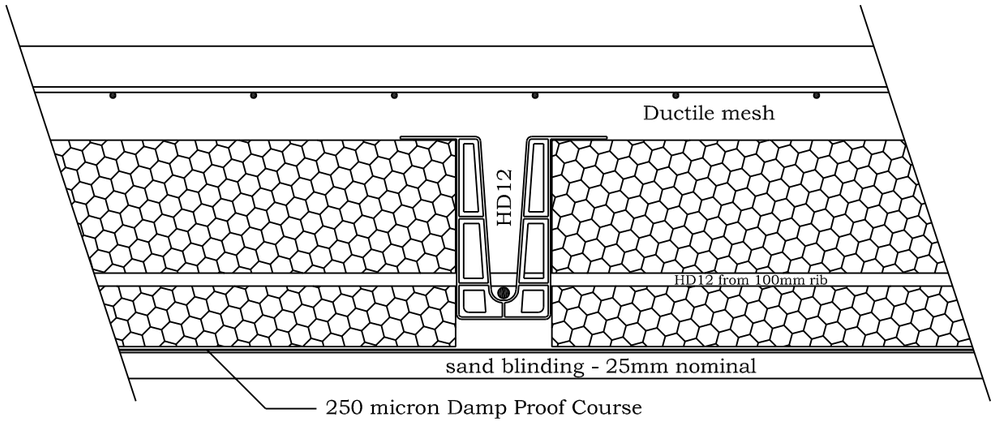

typical 100mm rib detail
HD12 as shown

RIBRAFT FLOORS™
Building System By
Firth
LEADING BY DESIGN

©COPYRIGHT FIRTH INDUSTRIES LTD 1996.

NOTES:

THIS RIBRAFT FLOOR SLAB HAS BEEN DESIGNED IN ACCORDANCE WITH NZS 3604, NZS 4229 & THE "RIBRAFT FLOOR APPRAISAL" PREPARED BY WORKS CONSULTANCY SERVICES LTD FOR FIRTH INDUSTRIES LTD.

JOB TITLE:

Kilian
93 Clausen Avenue
Leeston

SHEET TITLE:

300mm floor beam thickening plus 100mm rib details

DESIGNED:

DRAWN: M.R.H.

CAD DWG.:

SCALES: n/a (in A3)

DATE: 14.05.08

DWG NO. S2/2

SDC - Approved Building Consent Document - BC250732 - Pg 35 of 40 - 6/06/2025 - sandea

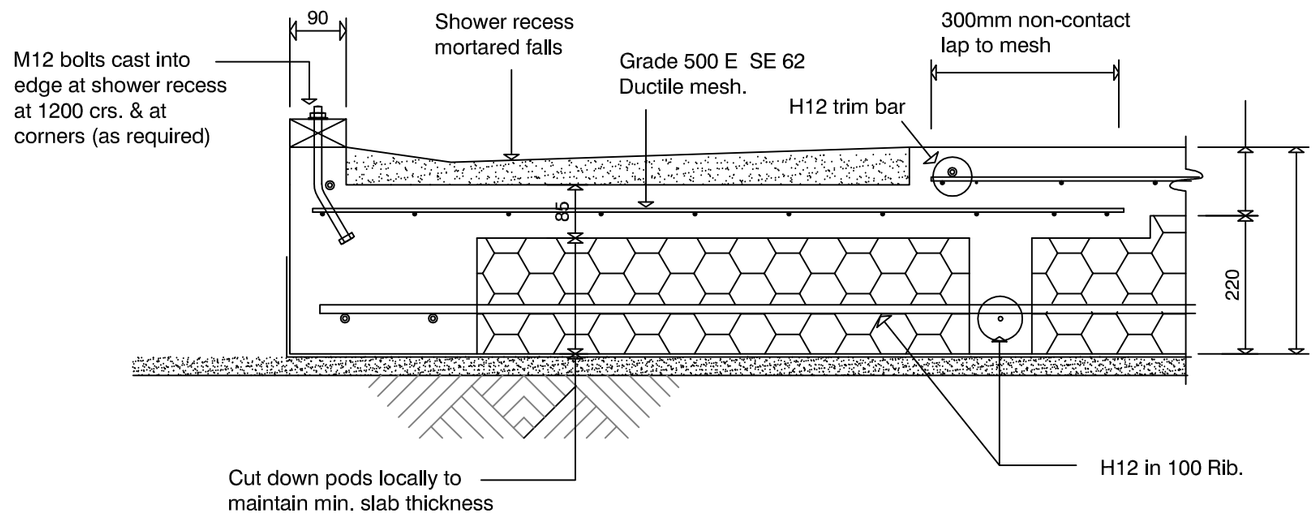

SECTION 4 / S2

1:10

Size & location of shower to be determined by Architect,
Refer to Architects Drawings

RIBRAFT FLOORS™
Building System By
Firth
LEADING BY DESIGN

©COPYRIGHT FIRTH INDUSTRIES LTD 1996.

NOTES:

THIS RIBRAFT FLOOR SLAB HAS BEEN DESIGNED IN ACCORDANCE WITH NZS 3604, NZS 4229 & THE "RIBRAFT FLOOR APPRAISAL" PREPARED BY WORKS CONSULTANCY SERVICES LTD FOR FIRTH INDUSTRIES LTD.

JOB TITLE:

Kilian
93 Clausen Avenue
Leeston

SHEET TITLE:

shower
recess
detail

DESIGNED:

DRAWN: M.R.H.

SCALES: (in A3) n/a

CAD DWG.:

DATE: 14.05.08

DWG NO. S2/3

SDC - Approved Building Consent Document - BC250732 - Pg 36 of 40 - 6/06/2025 - sandea

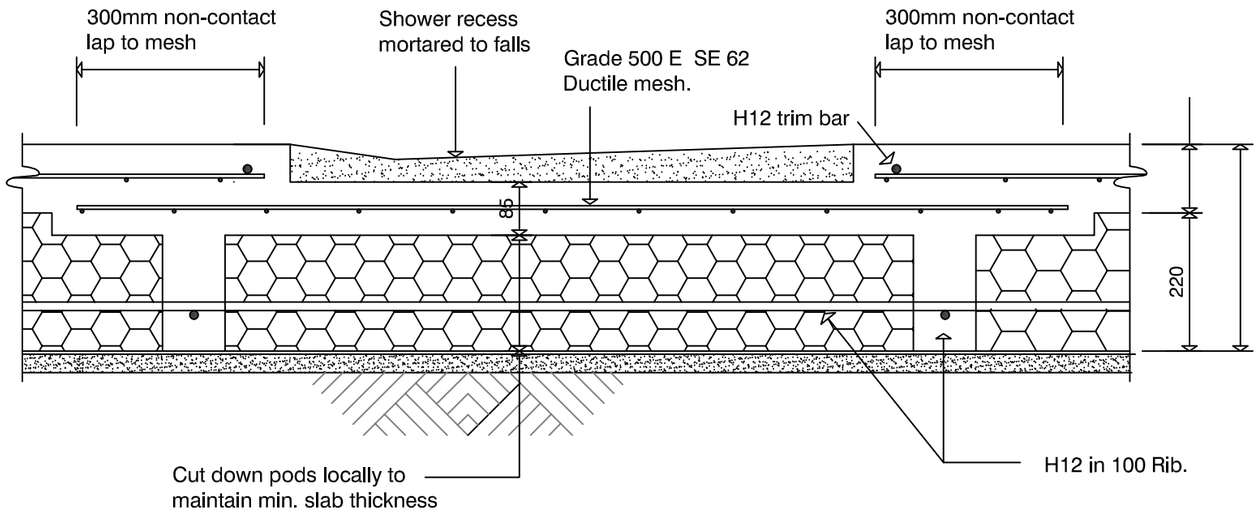

Wet Floor Shower Recess Detail

refer Architect's drawings for exact size and location

RIBRAFT FLOORS™
Building System By
Firth
LEADING BY DESIGN

©COPYRIGHT FIRTH INDUSTRIES LTD 1996.

NOTES:

THIS RIBRAFT FLOOR SLAB HAS BEEN DESIGNED IN ACCORDANCE WITH NZS 3604, NZS 4229 & THE "RIBRAFT FLOOR APPRAISAL" PREPARED BY WORKS CONSULTANCY SERVICES LTD FOR FIRTH INDUSTRIES LTD.

JOB TITLE:

Kilian
93 Clausen Avenue
Leeston

SHEET TITLE:

shower
recess
detail

DESIGNED:

DRAWN: M.R.H.

CAD DWG.:

SCALES: n/a
(in A3)

DATE: 14.05.08

DWG NO. S2/4

SDC - Approved Building Consent Document - BC250732 - Pg 37 of 40 - 6/06/2025 - sandea

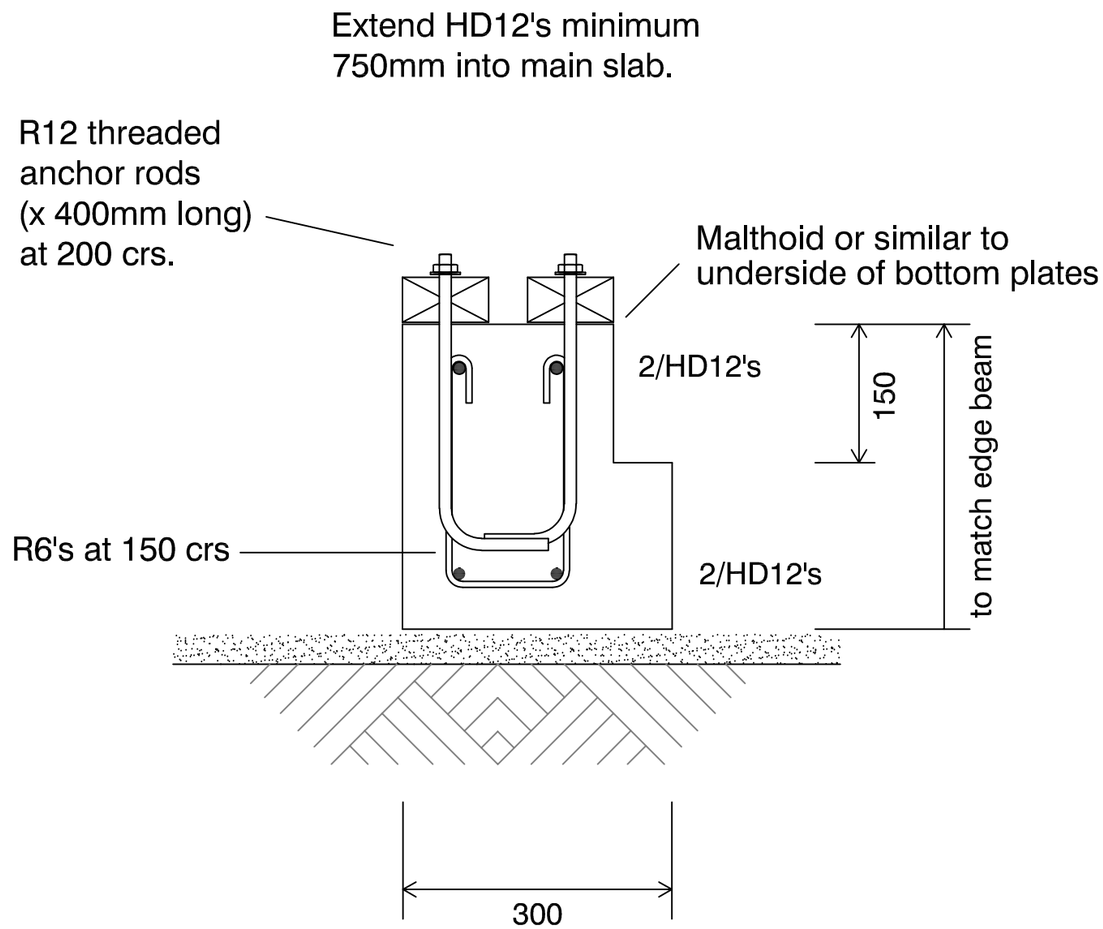

RIBRAFT FLOORS™
Building System By
Firth
LEADING BY DESIGN

©COPYRIGHT FIRTH INDUSTRIES LTD 1996.

NOTES:

THIS RIBRAFT FLOOR SLAB HAS BEEN DESIGNED IN ACCORDANCE WITH NZS 3604, NZS 4229 & THE "RIBRAFT FLOOR APPRAISAL" PREPARED BY WORKS CONSULTANCY SERVICES LTD FOR FIRTH INDUSTRIES LTD.

JOB TITLE:

Kilian
93 Clausen Avenue
Leeston

SHEET TITLE:

200mm wide
wingwall detail

DESIGNED:

DRAWN: M.R.H.

CAD DWG.:

SCALES: (in A3) n/a

DATE: 14.05.08

DWG NO. S2/5

SDC - Approved Building Consent Document - BC250732 - Pg 38 of 40 - 6/06/2025 - sandea

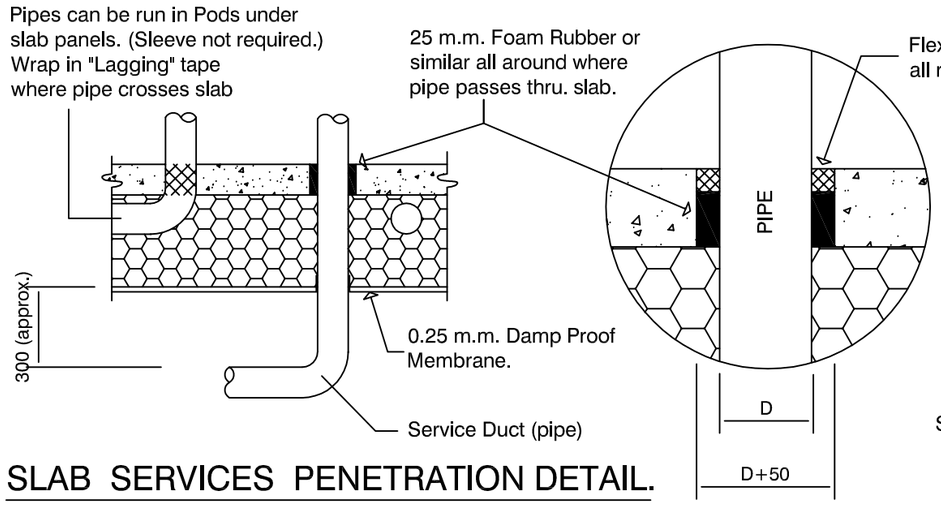

SLAB SERVICES PENETRATION DETAIL.

1:20

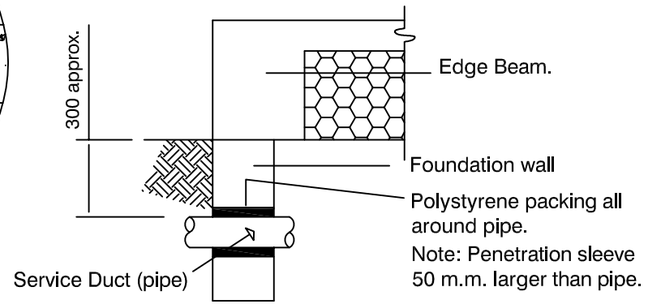

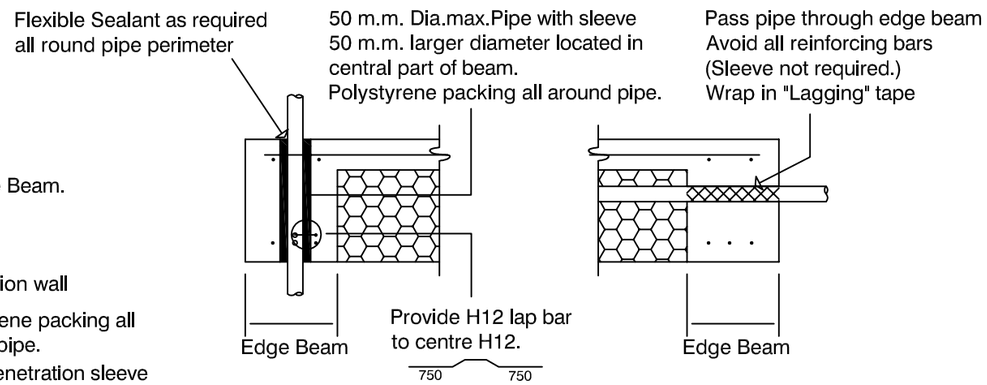

FOUNDATION SERVICES PENETRATION DETAILING.

1:20

Ideally, services ducts shall be conveyed underground to their plan location then brought up through the polystyrene pod and the concrete floor slab, but this may not always be possible. Services shall not be placed within any concrete except to cross that section of concrete i.e. services shall not run along ribs or edge beams.
The maximum diameter of the services shall be as outlined in table below.

MAXIMUM DIAMETER OF PIPE SERVICES		
ELEMENT	VERTICAL SERVICES	HORIZONTAL SERVICES
300mm wide edge beam	50mm in a duct 50mm larger diameter than pipe	50mm in a duct 50mm larger diameter than pipe, unless detailed as per note 1.
500mm localised wide edge beam	100mm in a duct 50mm larger diameter than pipe	50mm in a duct 50mm larger diameter than pipe, see note 1.
300mm wide internal load bearing rib	50mm in a duct 50mm larger diameter than pipe	50mm in a duct 50mm larger diameter than pipe, see note 1.
100mm wide internal rib	Nil	50mm in a duct 50mm larger diameter than pipe, see note 1.
Slab	110mm in a duct 50mm larger diameter than pipe or for large services 450mm square see also note 2.	Nil

(1) The need for a duct 50mm larger than the service diameter can be deleted when the pipe work does not cross the interface between the bottom of the RibRaft system and the ground at any point along its length. An example would be services laid within the plane of the pods and passing through the edge beam and discharging to a gully trap or similar. In these cases the diameter of the service can be increased to a maximum of 100mm and a service duct is not required. The pipe work shall be wrapped in Lagging tape where it crosses concrete elements to prevent adhesion between the concrete and pipe work.

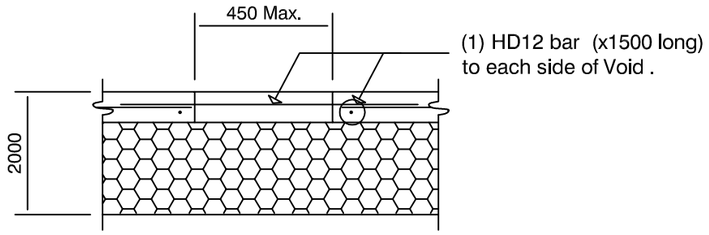

LARGE SLAB PENETRATION DETAIL.

1:20

PIPE NOTE:
No separation required where pipes are fully contained within slab. Sleeve all drains that pass through the base of the slab.

PENETRATIONS NOTE:
Where penetrations through Floor Slab exceed 500 m.m. Square, Crack Control Bars will be required.

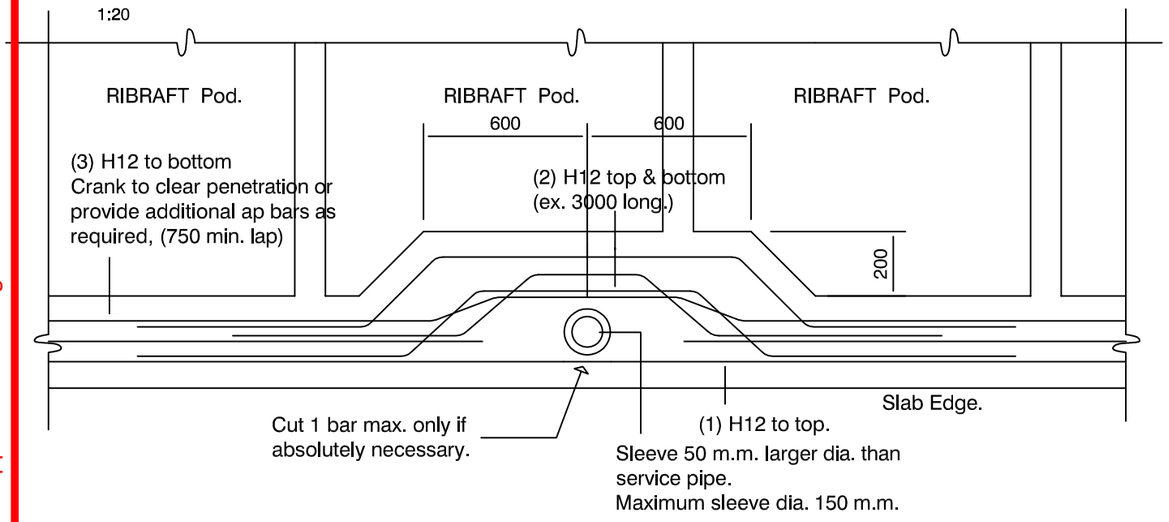

TYPICAL DETAIL.

1:20

LOCALISED INCREASE IN WIDTH AT EDGE BEAM WHERE VERTICAL SERVICES OF UP TO 100 m.m. DIA. ARE REQUIRED

RIBRAFT FLOORS™
Building System By
Firth
LEADING BY DESIGN

©COPYRIGHT FIRTH INDUSTRIES LTD 1996.

NOTES:

THIS RIBRAFT FLOOR SLAB HAS BEEN DESIGNED IN ACCORDANCE WITH NZS 3604, NZS 4229 & THE "RIBRAFT FLOOR APPRAISAL" PREPARED BY WORKS CONSULTANCY SERVICES LTD FOR FIRTH INDUSTRIES LTD.

JOB TITLE:

Kilian
93 Clausen Avenue
Leeston

SHEET TITLE:

Penetration
and
Remedial Details

DESIGNED:	EngCo Ltd	DRAWN:	M.R.H.
SCALES: (in A3)	1:100	CAD DWG.:	
		DATE:	02.05.14
DWG NO.	S5		

Buildable Consent Layout

FTMA NEW ZEALAND

For valley/saddle truss fixing unless stated otherwise use a pair of wire dogs at 900mm centres for up to and including a very high wind zone. Or a pair of CT200's at 900mm centres for extra high wind zone.This fixing is to meet the minimum requirements as per NZS3604.

CARTERS Your Building Partner

SDC - Approved Building Consent Document - BC250732 - Pg 39 of 40 - 6/06/2025 - sandea

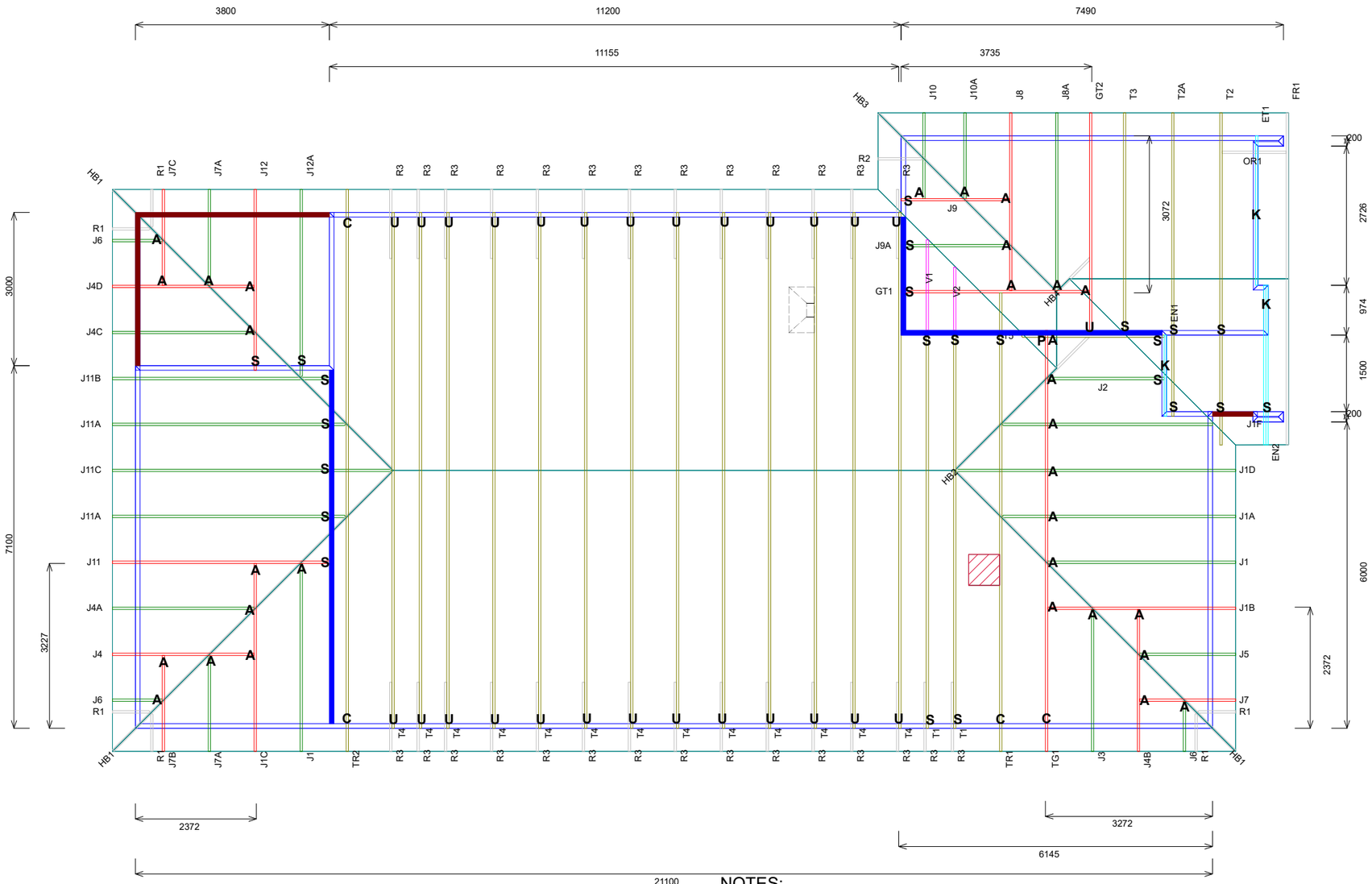

Beams

Loadbearing Internal Walls

Ceiling Access

Rangehood

NOTES:
- The gable end trusses have been designed to support the weight of the gable end cladding, and the gable end trusses have vertical and horizontal members as required by the cladding manufacturer to allow for the required cladding fixings.
- Top chord rafters to support overhang.
- Lateral web bracing required for truss T1. See detail page
- Extended top chords of trusses T2, T2A and EN2 to support raking.

Truss Fixings

A = 47x90 Joist Hanger
B = 47x120 Joist Hanger
C = CT200 (pair)
D = 47x190 Joist Hanger
E = 95x165 Joist Hanger
F = SH-140 Split Hanger
G = SH-180 Split Hanger
H = SH-220 Split Hanger
J = 2x6kN Strap (12kN)
K = 6kN Strap
L = Multigrip (single)
M = Multigrips (pair)
N = Nailon Plate (240x110x1)
P = 16kN Pack
Q = 9kN Pack
S = CPC 40 Single Cleat
T = CPC 40 Short (pair)
U = CPC 80 Single Cleat
V = 16kN Uplift
Z = Engineers Design

Unless otherwise indicated, all specified truss fixings are to use L/Lok product nail fasteners or Type 17 - 14g Hex Head Screws (as per the MiTek On-site Guide)

All truss to frame fixings require 2 additional 2/90x3.15dia skew nails.

All truss fixings not indicated as above must have 2 wire dogs for cross joints and 2/90x3.15dia nails for butt joins.

Fixings shown are for fixing trusses to the top plate. Any other point load uplift fixings down through the framing stud to top plate, stud to bottom plate, bottom plate to floor remain the responsibility of the architect / draughtsman.

Any roof loads as stated on this layout over 16kN lift are outside the scope of NZS3604, and the architect / draughtsperson is responsible for the design to transfer the loads to the ground.

Snow Zone:	Christchurch (N4)
Wind Area:	High
TC Restraints:	900 mm
Roof Material:	Galv Iron 0.55mm
Roof Pitch:	30.00 °
Snow Altitude:	100.000 m
Design Wind Speed:	44.0 m/s
BC Restraints:	600 mm
Ceiling Material:	Standard Plaster Board 13mm
Ground Snow Load:	0.900 kPa
Truss Centres:	900 mm

MiTek

Drawn:	Audrey Aguirre
Date:	30/05/2025

Job No: **CY1428073C2**
Customer: Kilian Contracting Limited
Job Name: 93 Clausen Ave - New Build
Address: 93 CLAUSEN AVENUE
Leeston, Leeston 7632

If a gable truss requires a windbeam brace, the type of MiTek brace will be noted as such on the layout.
The truss fixings can be substituted for other fixings of the same or greater capacity.
All verge framing to be fixed according to the MiTek On-Site Guide if not covered by NZS3604.
If bottom chord restraints are 35mm Metal battens, then they must be fixed with either two nails or screws.
If the metal battens are fixed with a single nail or screw then 90x45mm bottom chords restraints will be required at 1800mm centres

All loads shown on this page regarding the truss fixings are characteristic loads

Buildable Consent Layout

FTMA NEW ZEALAND

All internal walls shown on this layout are considered to be loadbearing
Lintel fixing specification remains the responsibility of the architect / draughtsperson

CARTERS Your Building Partner

All beam fixings are the responsibility of the Architectural Designer and/or Structural Engineer

Lintel Fixings are as per the included reports.

SDC - Approved Building Consent Document - BC250732 - Pg 40 of 40 - 6/06/2025 - sandea

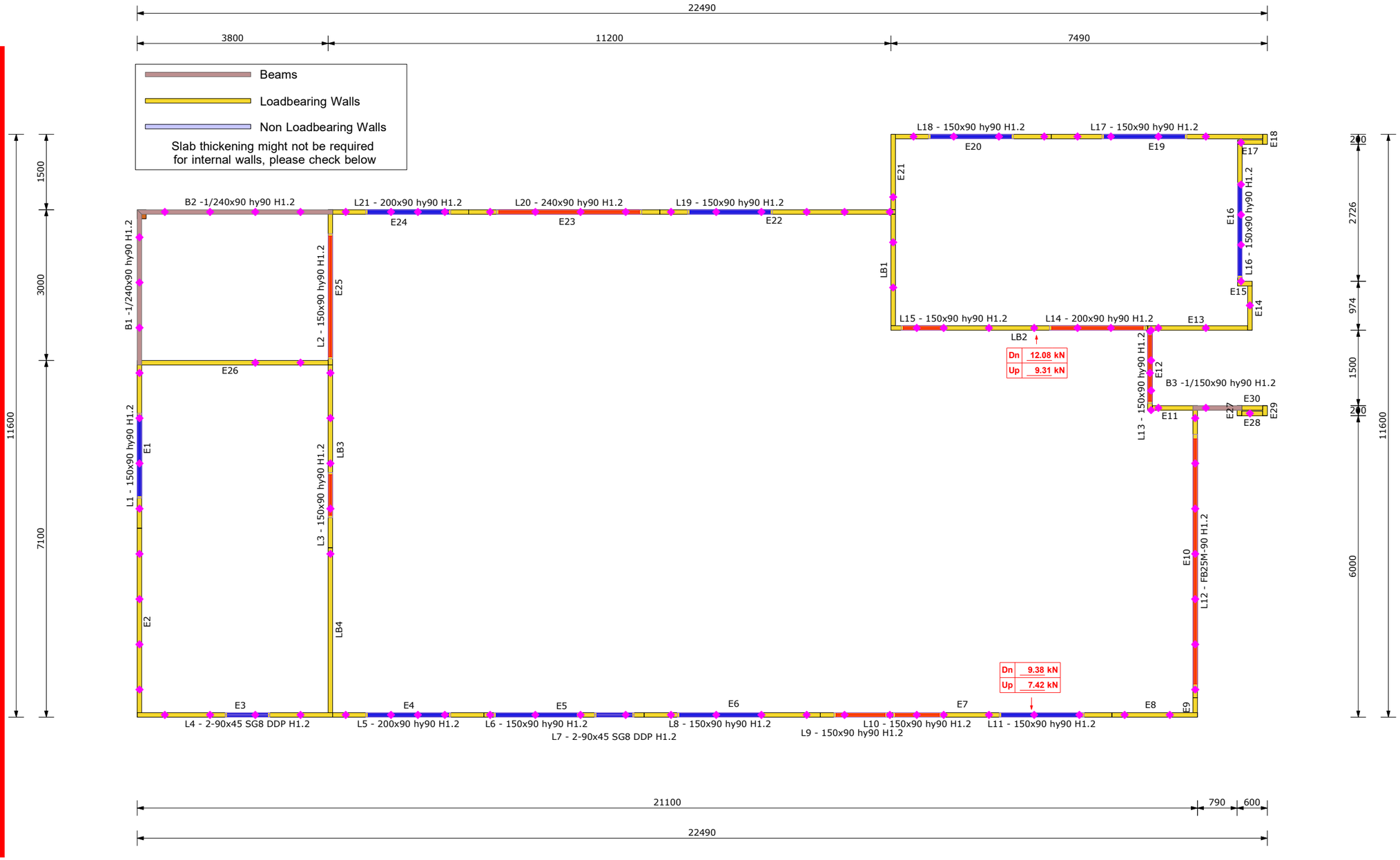

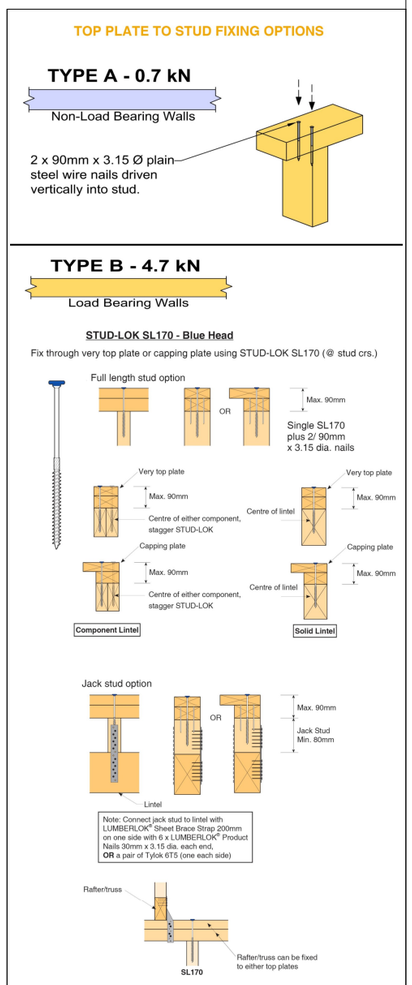

Note: These top plate to stud fixing options do not apply to walls under floors, just walls with trusses or rafters attached.

MiTek SAPPHIRE™ Every Facet an Advantage.

Drawn:	Audrey Aguirre
Date:	30/05/2025

Job No: **CY1428073C2**
Customer: Kilian Contracting Limited
Job Name: 93 Clausen Ave - New Build
Address: 93 CLAUSEN AVENUE
Leeston, Leeston 7632

Notification of point loaded lintels or point loads on internal walls where the downward load is higher than 8kN (85mm raft type slab) or 10kN (100mm standard slab), or the upward load is greater than 10kN. These loads are Ultimate Limit State Loads

If no loads are shown, no thickening is required.

The lintels have been sized using one of the following:

The MiTek SAPPHIRE Component Design Software.
hy90, hyONE and hySPAN lintels have been sized using the designIT for houses - New Zealand series 6 software.
GANGLAM and FLITCH BEAMS have been sized using the MiTek Beam Program V1.10 June 2011.

Unless otherwise stated the timber grade for all lintels is SG8. Lintels not shown are to be selected as per NZS3604: 2011 or designed by an engineer as required.
The lintels have not been designed to support brick shelf angles. The Architect or Engineer is required to design all lintels supporting brick shelf angles.