move.

council records

713 plymouth road
koru

Statement of Passing Over:

This information has been supplied by the vendor or the vendor's agents and move (powered by ownly Ltd licensed REAA 208) is merely passing over this information as supplied to us. We cannot guarantee its accuracy as we have not checked, audited, or reviewed the information and all intending purchasers are advised to conduct their own due diligence investigation into this information. Where you have been supplied with a Council Property File or a LIM Report, please note there may be matters relating to pre-1992 consents or permits in this file which may need further investigation in order to determine their relevance. To the maximum extent permitted by law we do not accept any responsibility to any party for the accuracy or use of the information herein.

- Natural Source
- Treatment Plant
- Pumpstation
- Storage Unit
- Hydrant
- Manhole
- Alert Valve
- Air Valve
- Non-Return Valve
- Standard Valve
- Manifold Valve
- Backflow
- Meter
- Restricted Flow
- Wellup
- Inlet
- Outlet
- Soakhole
- End Point
- Node
- Misc Point
- Trunk
- Rise
- Main
- Lateral
- Open Drain
- Stream
- Overland Flow Path
- Misc Polygon
- Proposed Bund and Ponding Areas
- Storm Water Mgmt Plan

Yellow = Privately Owned

Grey = Out of Service/Closed

Stormwater

Water Supply

Waste Water

Te Kaunihera-ā-Rohe o Ngāmotu
New Plymouth District Council

COPYRIGHT: Cadastral information sourced from Land Information New Zealand data. Crown Copyright Reserved.

DISCLAIMER: NPDC assumes no responsibility for the completeness or accuracy of the data displayed on the plot. To be used for indicative purposes only.

HORIZONTAL DATUM
New Zealand Geodetic Datum 2000

MAP PROJECTION
New Zealand Transverse Mercator

0 10 20 40
m

MILES Print Map

Date: 28/01/2026

1:564

18 Images

BUILDING CONSENT

21507P

PROPERTY ID **005877**

21507P

Document Set ID: 593310
Version: 1, Version Date: 08/10/2001

EXTRA INFORMATION/AMENDMENTS

CHARGE: $

JOB: Ostrich Abbotoir

CONSENT NO: 21507

ADDRESS: 647 Plymouth Rd
Omata

THE CHANGES COVERED BY THIS AMENDMENT ARE:

Plumbing + drain details

FORMAL DECLARATION – (Please read carefully prior to signing)

This AMENDMENT to the abovementioned Building Consent is made by me as owner of the property:

Signature: _____ Date: _____

OR *I am the applicant authorised by the owner to make this AMENDMENT:*

Signature: _____ Date: _____

Posted by Keith Harvey.

Office use only

	Approved	Refused
Records		
Building	21/6 23/4/98	
Public Health		
District Planning		

Don Baker.
Ostrich Abattoir.

Please advise if any thing else required.

Keith Harvey.

Continued Over ☐

bconsent/forms/Changes covered by this AMENDMENT

Document Set ID: 593310
Version: 1, Version Date: 08/10/2001

Document Set ID: 593310
Version: 1, Version Date: 08/10/2001

21506/21507
20/2/98

AMENDMENT

№ 1 200298

OFFICE COPY

PLANS AND SPECIFICATIONS APPROVED FOR TYPE, USE, SITING, COVERAGE AND CONSTRUCTION, AS IN ACCORDANCE WITH ALL RELEVANT ACTS REGULATIONS AND BY-LAWS ADMINISTERED BY THE NEW PLYMOUTH DISTRICT COUNCIL.

APPROVED: _____ DATE 23.2.98

THESE PLANS AND SPECIFICATIONS ARE THE PROPERTY OF THE NEW PLYMOUTH DISTRICT COUNCIL.

Harvey Farms
Ostrich Abbotoir

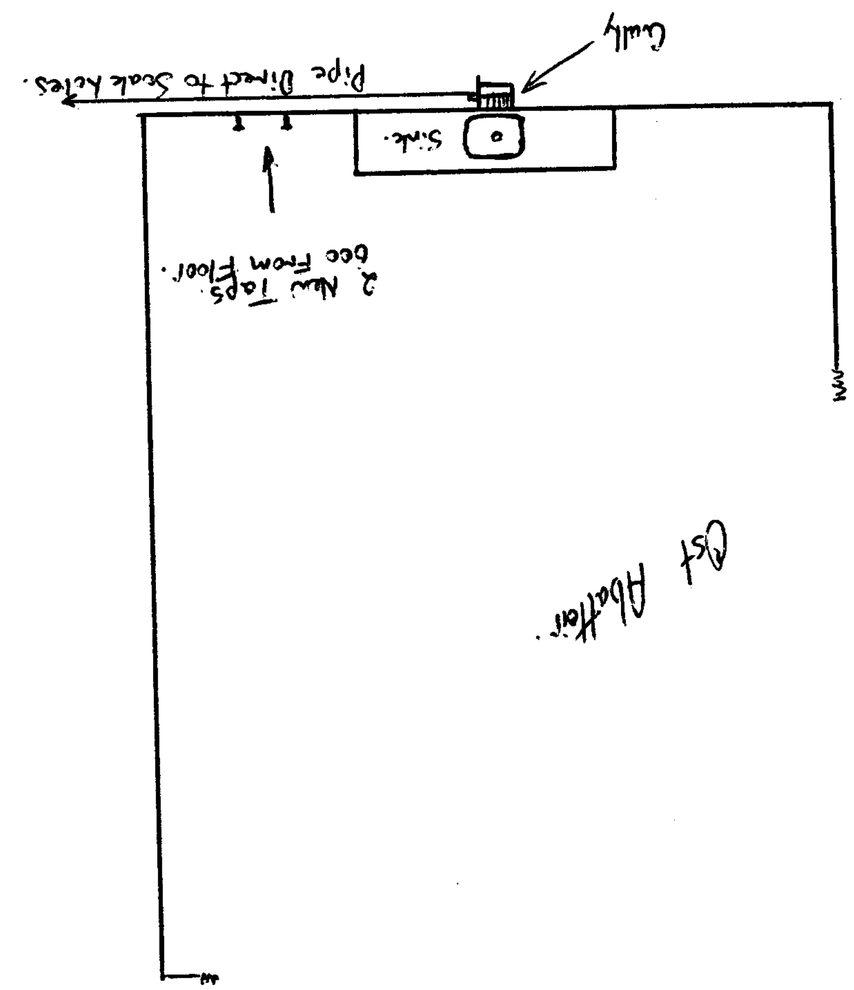

Scale 1:20

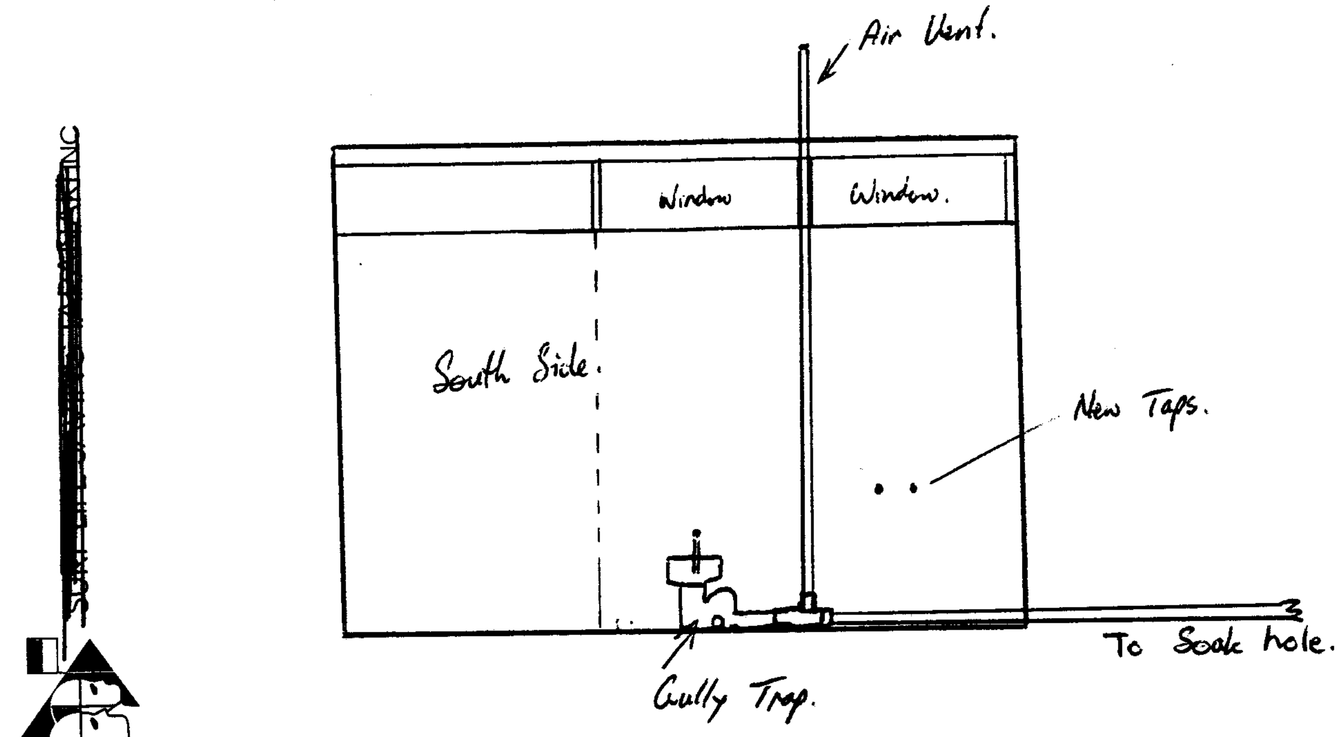

Scale 1:20

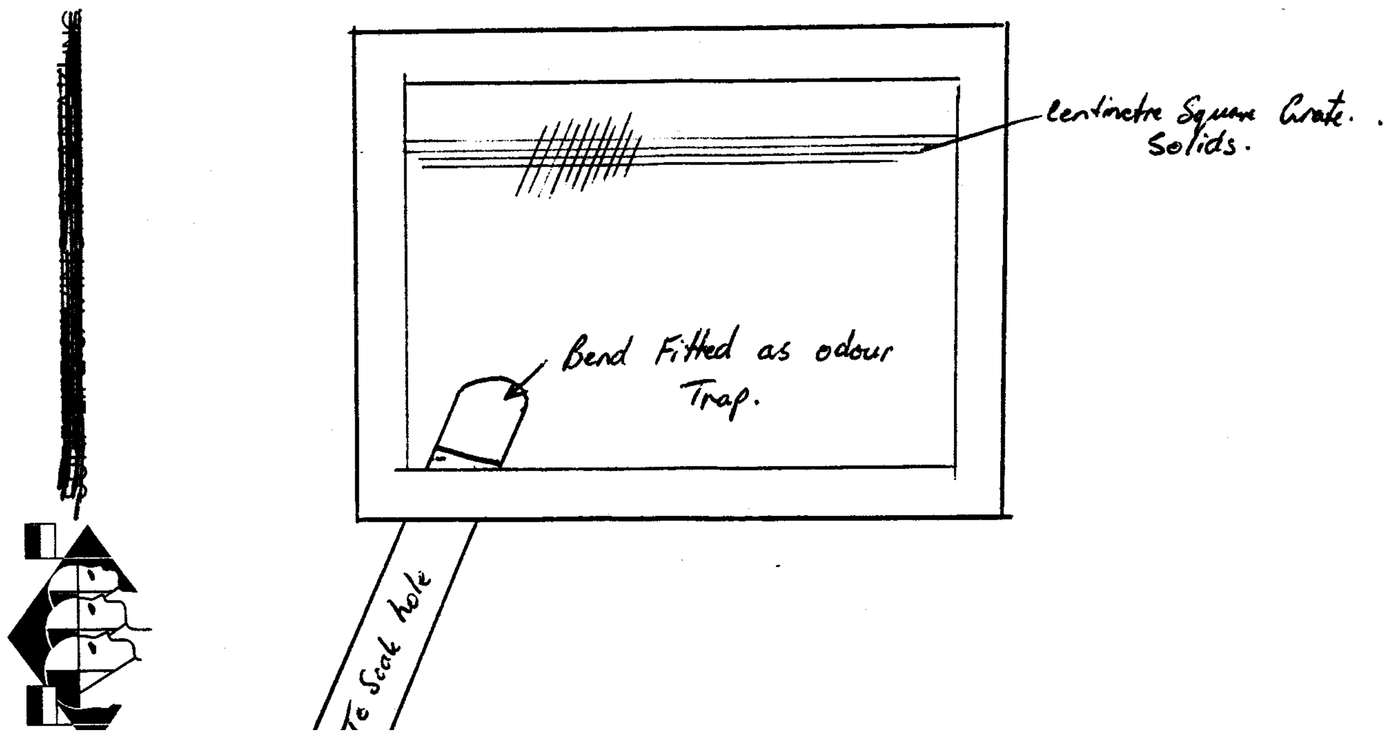

Sand Trap.
Scale 1:100

Sand Trap.

Scale 1 · 100

THE DAILY NEWS

AMENDMENT

№ 1 200298

SURF LIFE SAVING TARANAKI INC

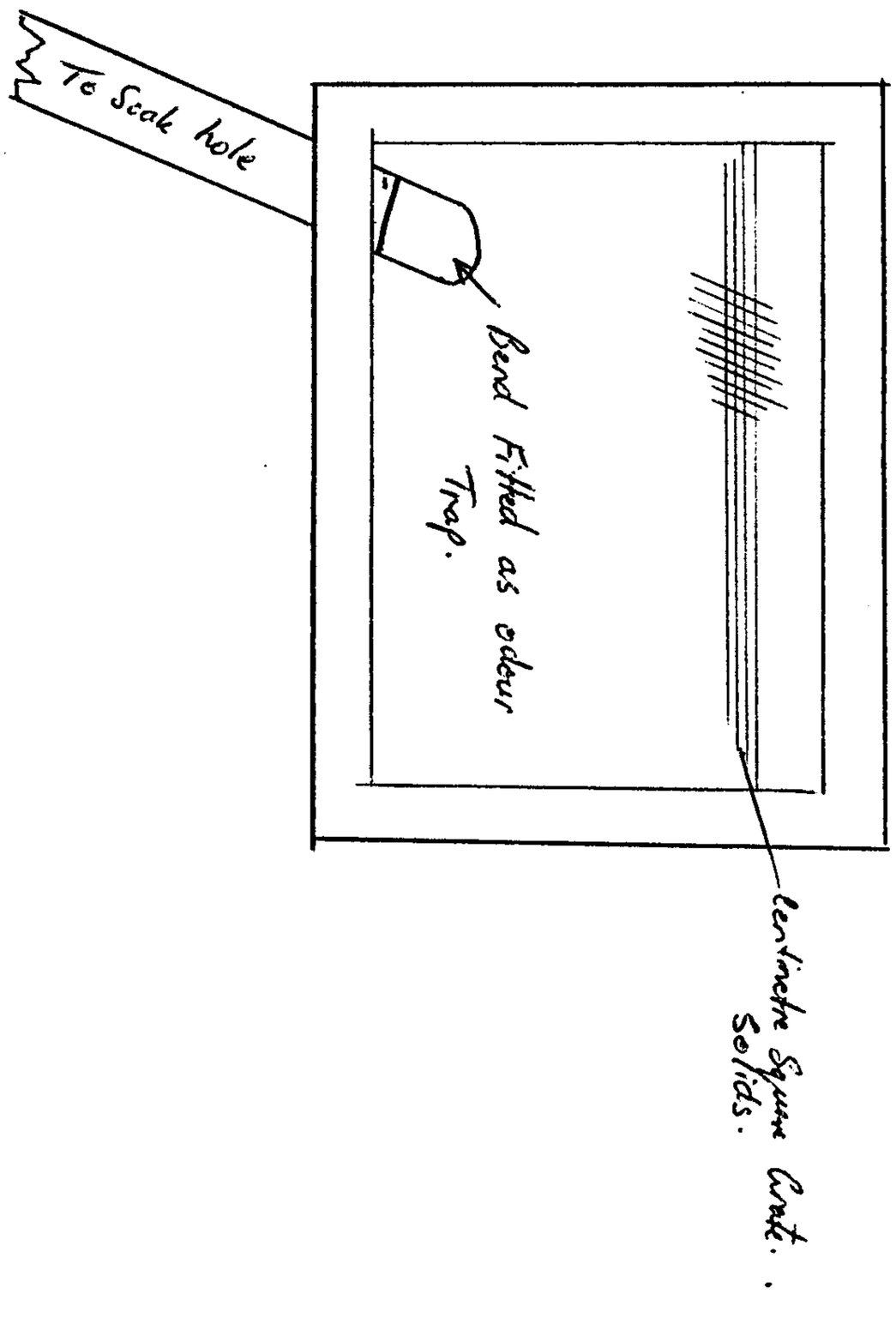

Document Set ID: 593310
Version: 1, Version Date: 08/10/2001

Scale 1.20

THE DAILY NEWS

SURF LIFE SAVING TARANAKI INC

AMENDMENT

№ 1 200298

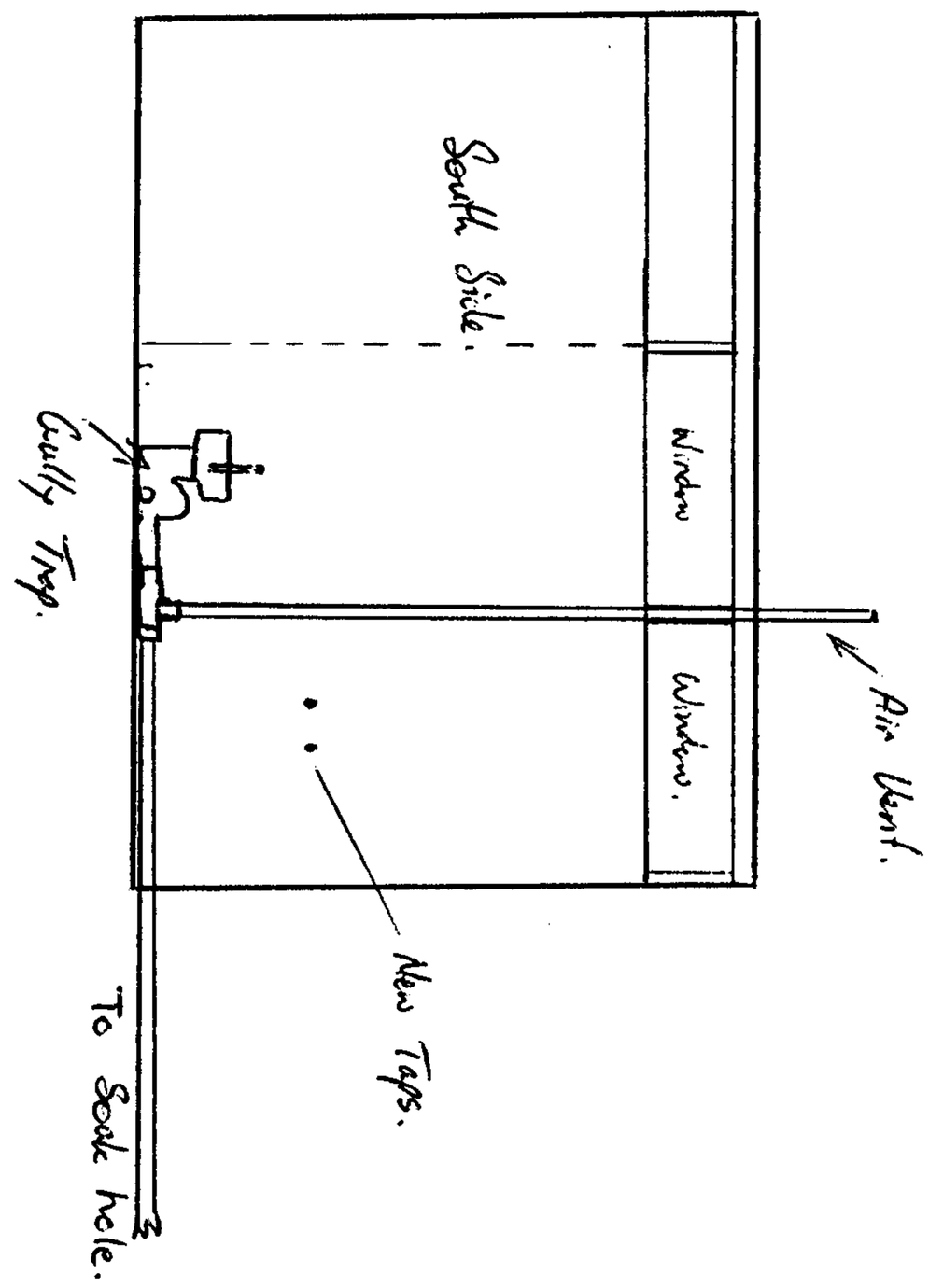

Document Set ID: 593310
Version: 1, Version Date: 08/10/2001

Scale 1:20

THE DAILY NEWS

AMENDMENT

SURF LIFE SAVING TARANAKI INC

#1 200298

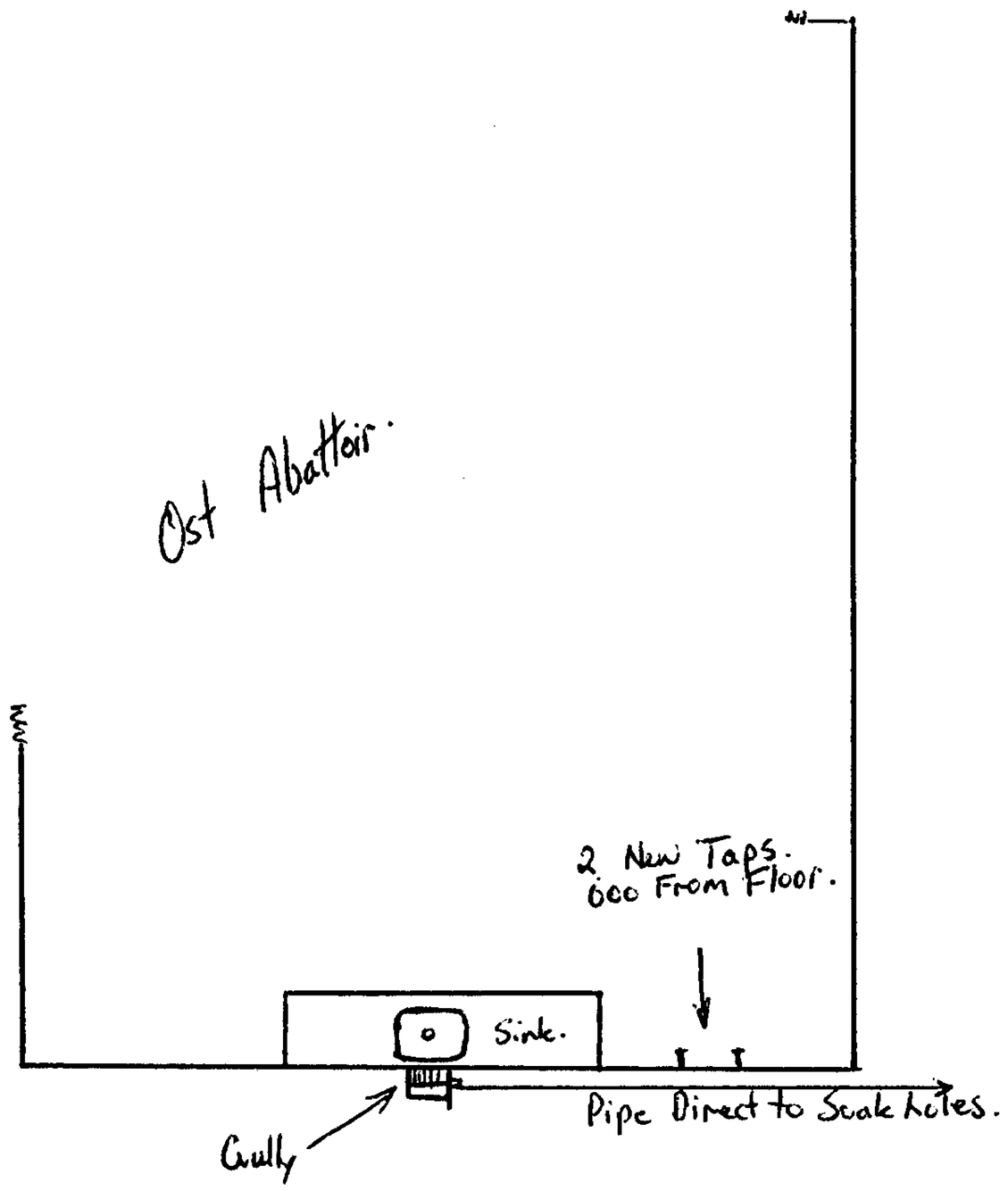

South Side.

Notes.

Rails to ceiling loading. Not more than 150 kg or Eng calcs Req.

Water flowing accross floor.
Plumbing fittings to drains.
Effect of stormwater on soak holes.
Sanitary facilities for workers.
Back flow prevention to water supplys.

Document Set ID: 593310
Version: 1, Version Date: 08/10/2001

SURF LIFE SAVING TARANAKI INC

THE DAILY NEWS
RECEIVED
- 5 JAN 1998

Mr Baker BC 21507 ID 005877

125×50 Rafters are supported by 40mm Galvanised pipe set in old vat stand. which is concrete.

This pipe is bolted to 6×2 (150×50) on its edge in the Centre of the Building.

RHS Supports Droppers for Kill Rail.

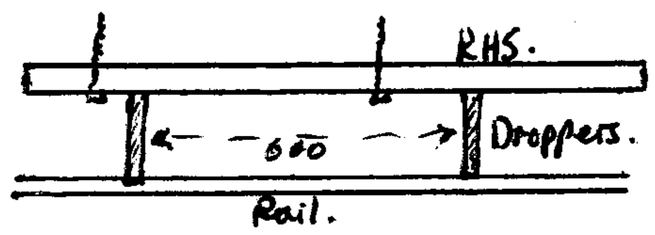

Maximum Weight 150 kg.

Wall openings are existing - No new Framing.

Document Set ID: 593310
Version: 1, Version Date: 08/10/2001

Document Set ID: 593310
Version: 1, Version Date: 08/10/2001

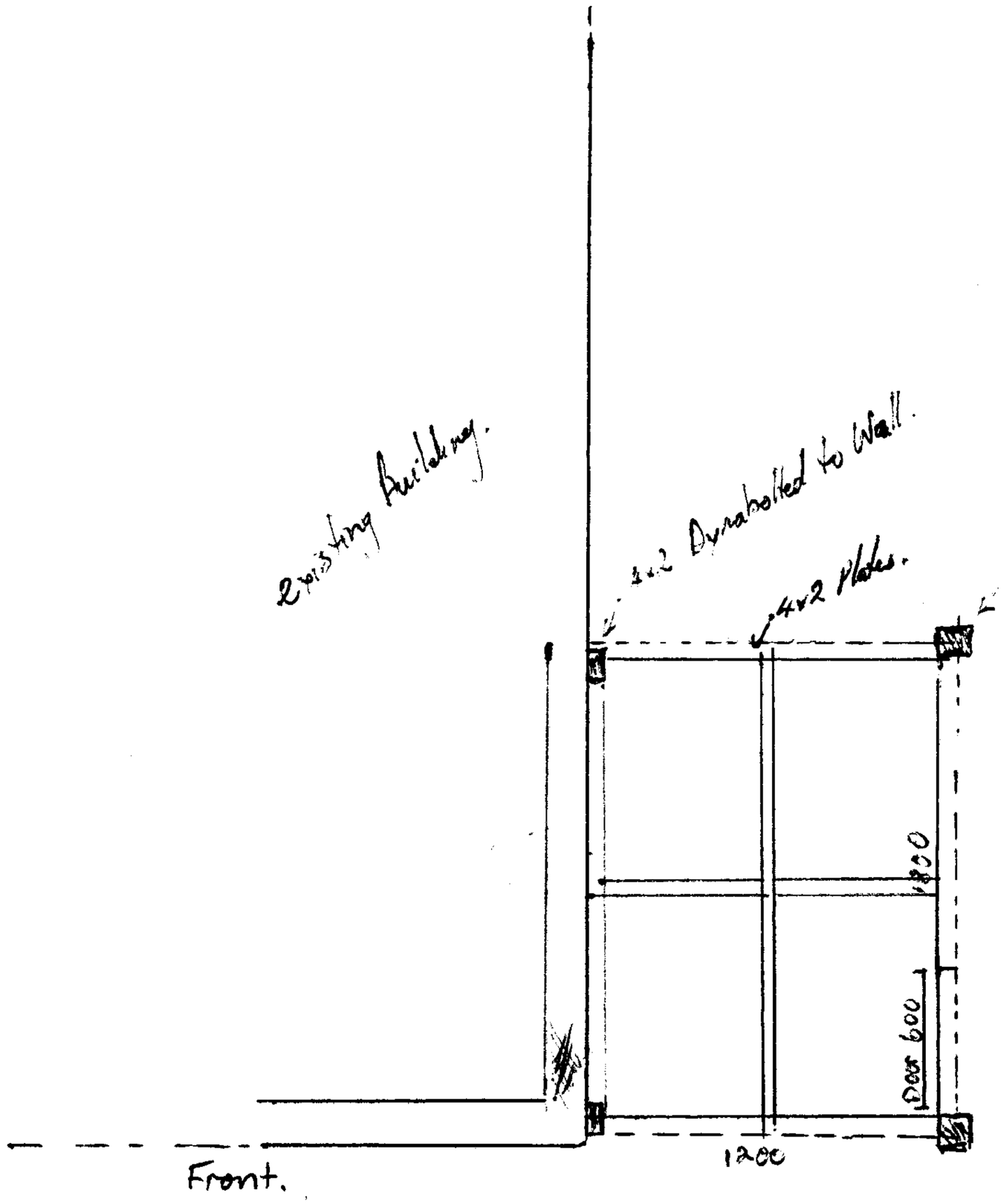

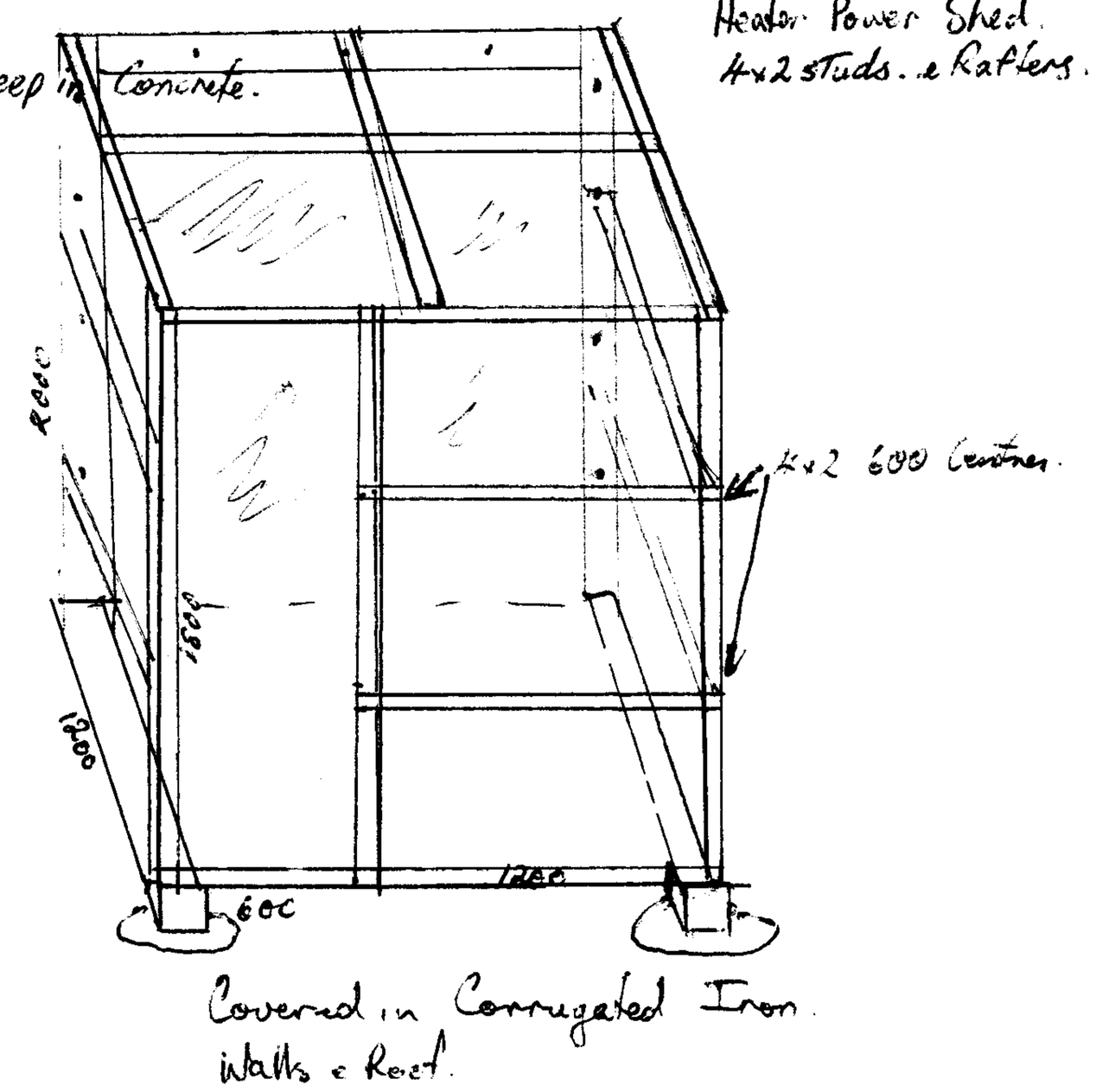

Document Set ID: 593310
Version: 1, Version Date: 08/10/2001

Water Supply - Drainage - Service Details.

As Shown in Plan.

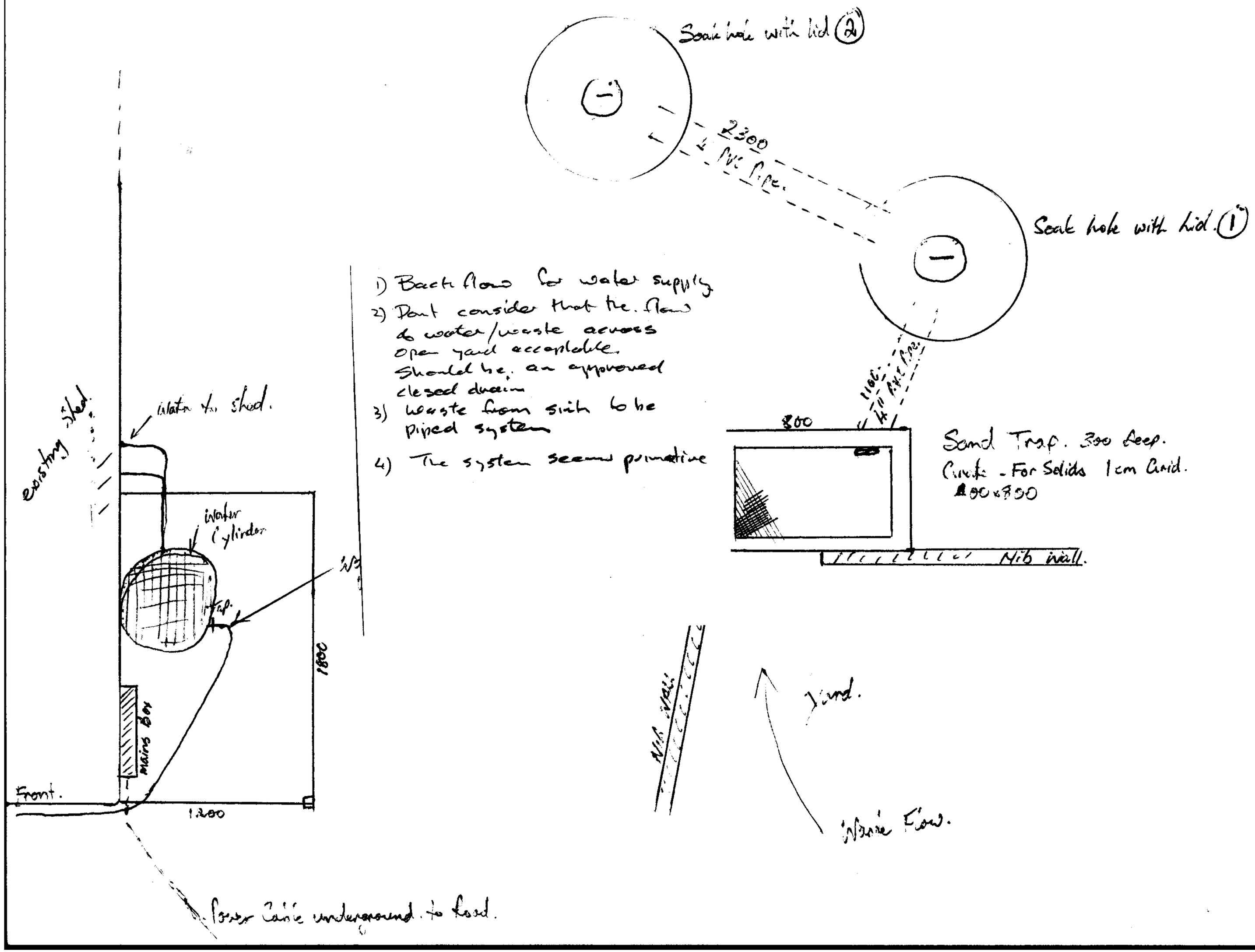

Scale 1-1000

21506/21507
12/12/97

N

OFFICE COPY

PLANS AND SPECIFICATIONS APPROVED FOR TYPE, USE, SITING, COVERAGE AND CONSTRUCTION, AS IN ACCORDANCE WITH ALL RELEVANT ACTS REGULATIONS AND BY-LAWS ADMINISTERED BY THE NEW PLYMOUTH DISTRICT COUNCIL.

DATE

P.T Sec 160

APPROVED

THESE PLANS AND SPECIFICATIONS ARE THE PROPERTY OF THE NEW PLYMOUTH DISTRICT COUNCIL.

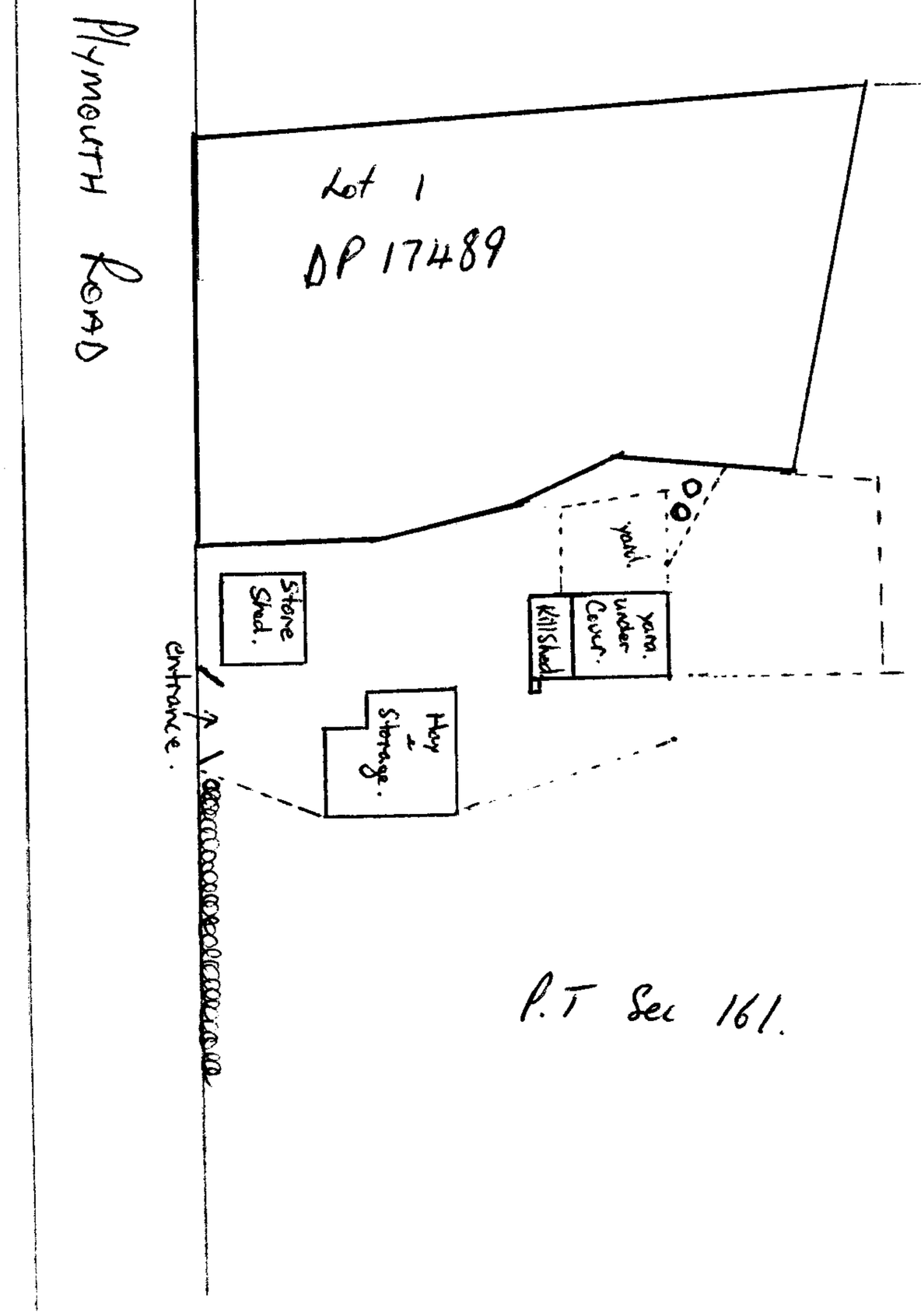

Document Set ID: 593310
Version: 1, Version Date: 08/10/2001

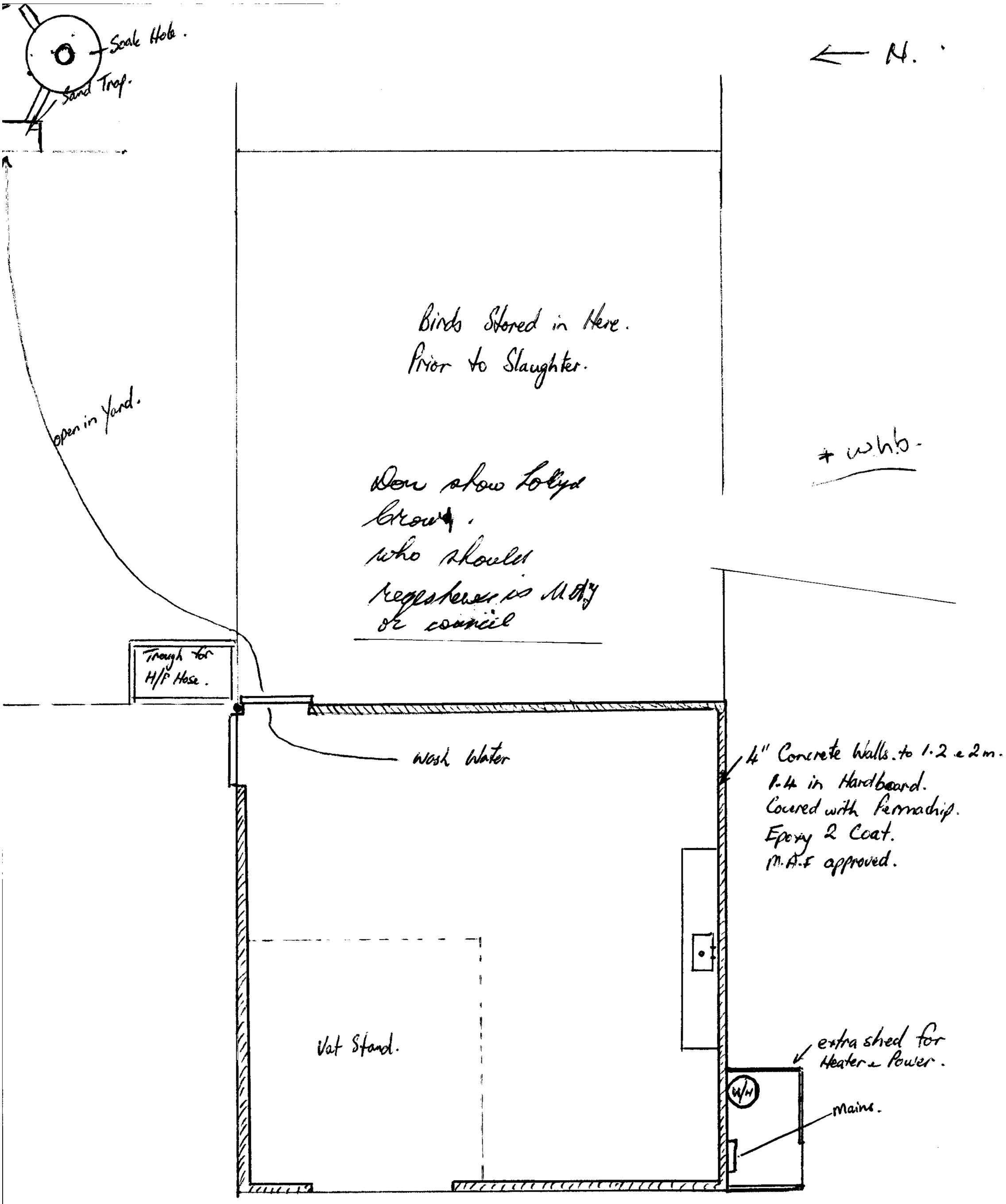

Document Set ID: 593310
Version: 1, Version Date: 08/10/2001

Document Set ID: 593310
Version: 1, Version Date: 08/10/2001

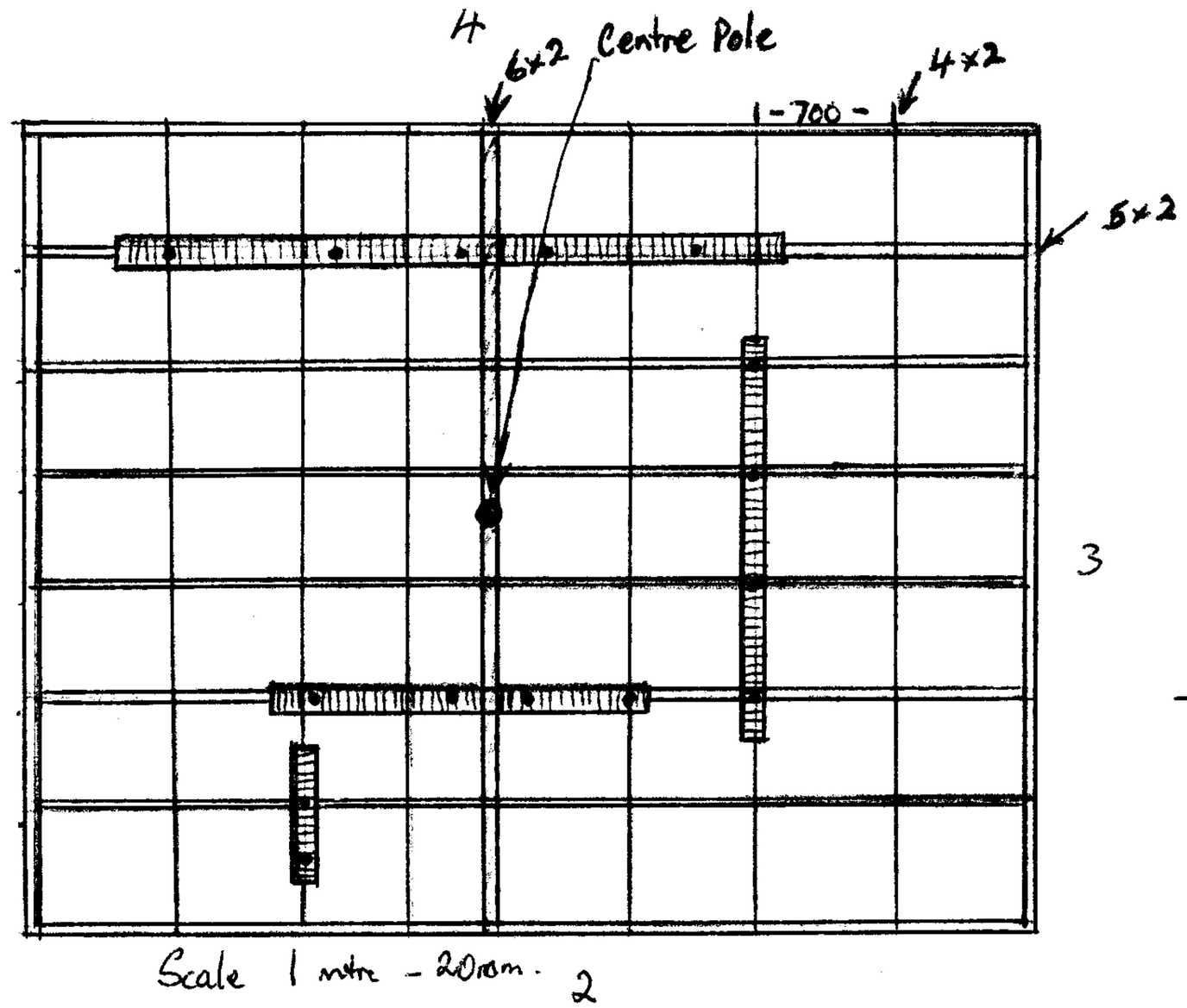

Scale 1 metre - 20mm.

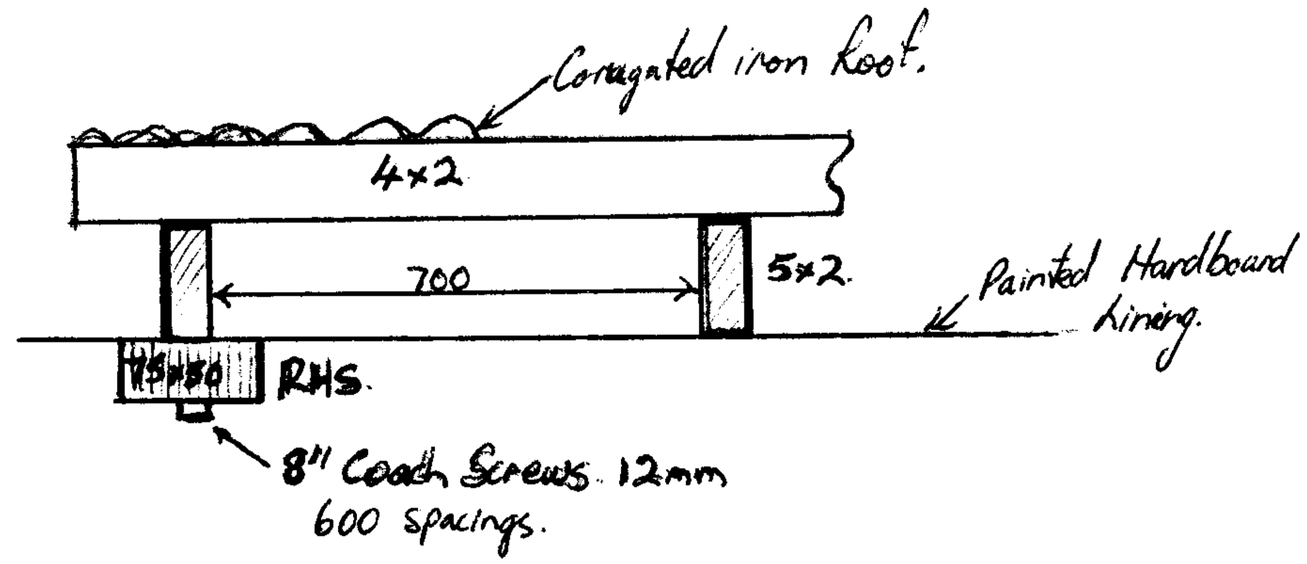

Vents are all open with Alimium Mesh.

RHS 75x50 - Rail support.

4" Blocks Poured Concrete Walls.

Hardboard lining. 4x2

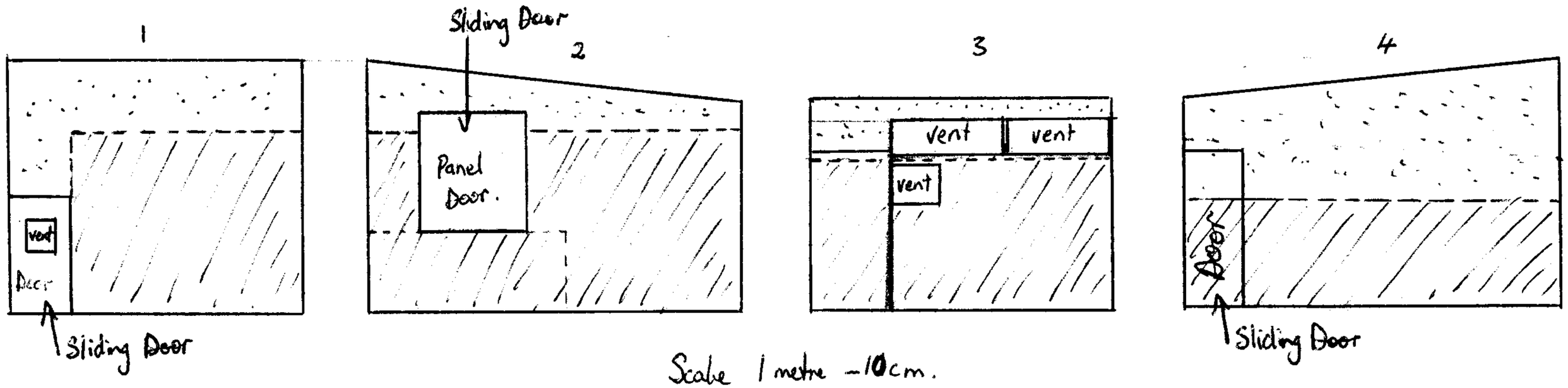

Scale 1 metre - 10cm.

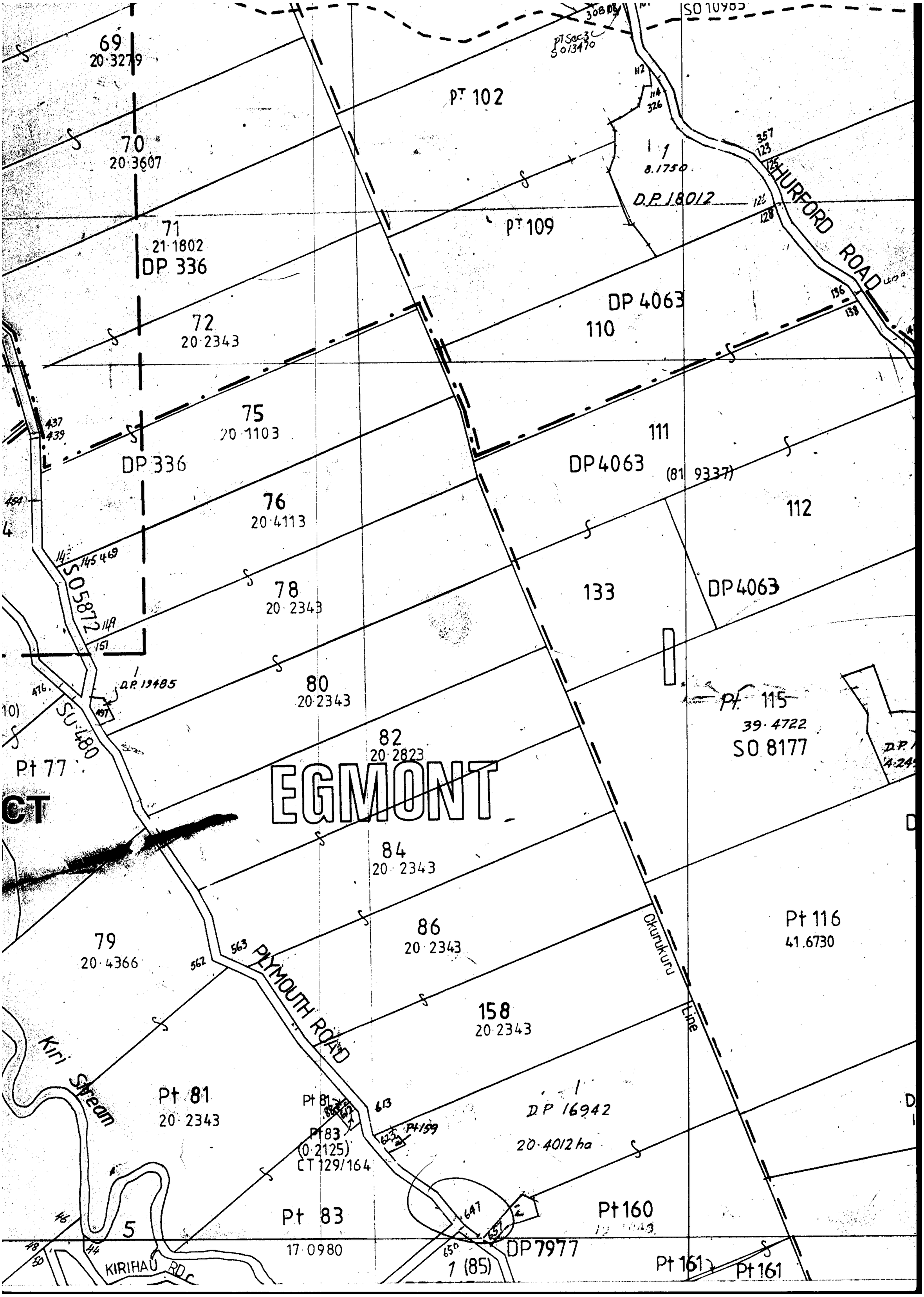

Document Set ID: 593310
Version: 1, Version Date: 08/10/2001

BC. 21507

Industrial Chemistry Services

Attention Trevor Hughes
From Keith Harvey.

OFFICE COPY

PLANS AND SPECIFICATIONS APPROVED FOR TYPE, USE, SITING, COVERAGE AND CONSTRUCTION, AS IN ACCORDANCE WITH ALL RELEVANT ACTS REGULATIONS AND BY-LAWS ADMINISTERED BY THE NEW PLYMOUTH DISTRICT COUNCIL.

DATE

APPROVED: .... / ....

THESE PLANS AND SPECIFICATIONS ARE THE PROPERTY OF THE NEW PLYMOUTH DISTRICT COUNCIL.

Potable Water Supply Inspection

Egmont Ostriches International Ltd
647 Plymouth Road
PO Box 39
Oakura

Date of Inspection: 3rd December 1998

Inspection in respect of Drinking Water Standards for new Zealand (1995), and MAF Regulatory Authority, Industry Standard 3 - Hygiene and Sanitation, Section 4: Potable water. (1997)

A site inspection was made at Egmont Ostriches International Ltd premises located at Plymouth Road, Oakura. This inspection was a preliminary inspection to provide guidelines for upgrading the water supply to an ostrich abattoir to potable standards.

The following are requirements for Potable Supply:

Catchment

1. The water currently may be taken from either the well or an adjacent stream. For these two sources a seperate analysis is required, and the treatment process employed must be designed to treat both sources. - OR fix the intake line into one source only
2. The current well is classified as non secure groundwater. A major potential contamination source exists with the effluent from the adjacent cowshed entering this well. This must be prevented form being able to enter the water source. The well needs to be covered to prevent insects and algae entering.

Reticulation

1. The current reticulation drawing is incomplete and requires updating. This drawing should include all valving, pumping, treatment, flushing lines, and identify the chemical dosing point.
2. Current reticulation to the abattoir is an extension of the farm supply system with 3 tee off lines. No protection exists to prevent farm trough water from entering the supply line. The abattoir requires a separate supply line from the pump with check valve and bleed inspection line installed, OR a check valve and inspection line installed at each tee point.
3. With the current configuration, redundant or dead legs in the reticulation system were unable to be checked.
4. The farm manager needs to undergo awareness of the water reticulation, and its importance to the abattoir operation to prevent changes or poor practice.

PO Box 345 - 5 Miranda Street - Stratford - New Zealand
Phone (06) 765 5976 / (025) 222 2287 / Fax (06) 765 5935

Document Set ID: 593310
Version: 1, Version Date: 08/10/2001

Storage

1. The storage tank design is suitable however the lid requires fixing to prevent ingress of organics or dust or bird and possum excretion.
2. The tank lid should be able to be locked.

Treatment

1. Current treatment involves manual chlorination the night before operations, then 5 um filtration, activated carbon filtration, and ultra violet disinfection. The treatment must also include 1um filtration.
2. The carbon filter removes chlorine. This filter needs to be removed to prevent absorbtion of chlorine and so allow a free chlorine up to point of use.
3. The ultra violet steriliser is redundant with correct chlorine use, and may be removed.
4. The chlorine is added as Sodium Hypochlorite to a tank on constant level control (ball cock), and a mixer therefore must be installed to mix the chlorine with the water. A manual mixer is satisfactory (eg milk vat stirrer).
5. If using stream water a system to remove suspended particulates prior to the treatment tank is required. This may be a settling tank, a filter, a clarifier, or other suitable system.

(NOTE: Sodium Hypochlorite is hazardous. You are strongly recommended to wear eye protection when handling.)

Analysis

1. A free residual chlorine test kit is available and is suitable. When testing the water the free chlorine results are required to be recorded. This should include the testing date and be signed by the person doing the test.
2. The recording sheet must be kept at the same location as the testing location.
3. The sample point for chlorine testing should be at point of use within the factory. A staff canteen area is satisfactory.
4. The free residual chlorine is currently tested only with days of operations. The Drinking water standards require this test to be done daily. (There is no provision in the standards for fluctuating operations).
5. In cases where operation is suspended the system must be flushed.
6. A suggested free residual chlorine levels for manual dosing such as this are as follows:
   Well water - > 1.0 g/m^3
   Stream water - > 2.0 g/m^3
   These levels will give adequate protection for fluctuations in the water source and in the time lag between doses.
7. The treatment process is classified as chlorinated and under 500. The daily water consumption is estimated as under 2000 m3 per day, and a microbiology test for faecal Coliform and E. Coli must be done once per month.
8. No chemical test of the water is available. This need to be arranged.

Procedures

1. Some procedures are in place but need to be updated. Procedures are required for treatment and storage, regular flushing, filter changes, analysis, recording and records, and contingency actions. The procedures must contain guidelines for ceasing operations and testing water when free chlorine levels fall below specification.
2. Procedures must be readily available to staff.

Document Set ID: 593310
Version: 1, Version Date: 08/10/2001

3. An overall management plan is available, and it is recommended that the water supply procedures form a part of this plan.

Records

1. No daily records are currently kept, and microbiology records which had been done previously were unable to be retreived at time of visit. Records should be kept in a separate folder, and need to be able to be easily retreived.
2. The records system is a method of providing evidence that the water supply operation meets requirements, and it is very strongly advised that every action on the water supply be documented - eg filter changes, maintenance, check valve testing, tank flushing etc. All records must be kept up to date

Re-Inspection

This water supply requires a re-inspection for potable certification.

Inspection By:

John Coplestone
Industrial Chemistry Services

END

Document Set ID: 593310
Version: 1, Version Date: 08/10/2001

15 Images

BUILDING CONSENT

27063P

PROPERTY ID 005877

27063P

EXTRA INFORMATION/AMENDMENTS

AMENDMENT

1 290399

Charge: $

Job:

Consent No: 970063

Address: 647 Plymouth Rd
Omata

The changes covered by this amendment are:

Info forwarded.

Formal Declaration – (Please read carefully prior to signing)

*This **AMENDMENT** to the abovementioned Building Consent is made by me as **owner** of the property:*

Signature: Date:

OR *I am the applicant **authorised by the owner** to make this **AMENDMENT:***

Signature: Faxed Date:

Office use only

Approved	Refused

Records	
Building	
	DJB. 30.3.99
Public Health	
District Planning	

Septic tank and effluent details are to be provided along with percolation test results for the proposed effluent

 B/027063

2

Planning & Environmental Services Department.
N.P District Council.

AMENDMENT

1 290399

Planning - The Workshop is for farm use as the farm at present has no workshop - the Amenities Block can be used for both the Abattoir & Farm.

The Abattoir is now under MAF License and not Local health.

Building - See 1. Cross Section Supplied. A New Septic Tank will be fitted.

Keith Harvey.

Ref Don Baker.

OFFICE COPY

PLANS AND SPECIFICATIONS APPROVED FOR TYPE, USE, SITING, COVERAGE AND CONSTRUCTION, AS IN ACCORDANCE WITH ALL RELEVANT ACTS REGULATIONS AND BY-LAWS ADMINISTERED BY THE NEW PLYMOUTH DISTRICT COUNCIL.

DATE

APPROVED: ..... / .....

THESE PLANS AND SPECIFICATIONS ARE THE PROPERTY OF THE NEW PLYMOUTH DISTRICT COUNCIL.

EXTRA INFORMATION/AMENDMENTS

Charge: $

Job: Harvey family trust

Address: 647 Plymouth Rd.

Consent No: 27063

The changes covered by this amendment are:

Percolation test Results.

Formal Declaration – (Please read carefully prior to signing)

*This **AMENDMENT** to the abovementioned Building Consent is made by me as **owner** of the property:*

Signature: Date:

OR *I am the applicant **authorised by the owner** to make this **AMENDMENT**:*

Signature: Faxed in Date:

Office use only

Approved	Refused

Records	

Building	
OK	

Public Health	

District Planning	

Attention Don Baker.
Re KL & DE Harvey. Plymouth Rd.
Amenities Block. Percolation Test.

Taken 4/4/99

Soil Type. Top Soil 220 mm. Then Clay & Broken Rock.
Very Free Draining. Conditions Dry.

Test Taken over 4 hours recorded & Refilled every ½ hour.

	High		Low
½	400	→	120 mm
1	400	→	140 mm
1½	400	→	150 mm
2	400	→	160 mm
2½	400	→	170 mm
3	400	→	170 mm
3½	400	→	180 mm
4	400	→	180 mm

Keith Harvey.

Planning & Environmental Services Department.
N.P District Council.

Planning - The Workshop is for farm use as the farm at present has no workshop - the Amenities Block can be used for both the Abattoir & Farm.

The Abattoir is now under MAF License and not Local health.

Building - See 1. Cross Section Supplied. A New Septic Tank will be fitted.

Keith Harvey.

Ref Don Baker.

PLYMOUTH DISTRICT COUNCIL

RECEIVED:	25 MAR 1999
REGISTER NO:	28037
FILE REF:	ID005877
DEPARTMENT:	PE&D

Info	Reply	Action	Report	Discuss
		BCM		

Property 647 Plymouth Road.
Amenities Block & Workshop.
BC 27063.

Scale 1-100

North

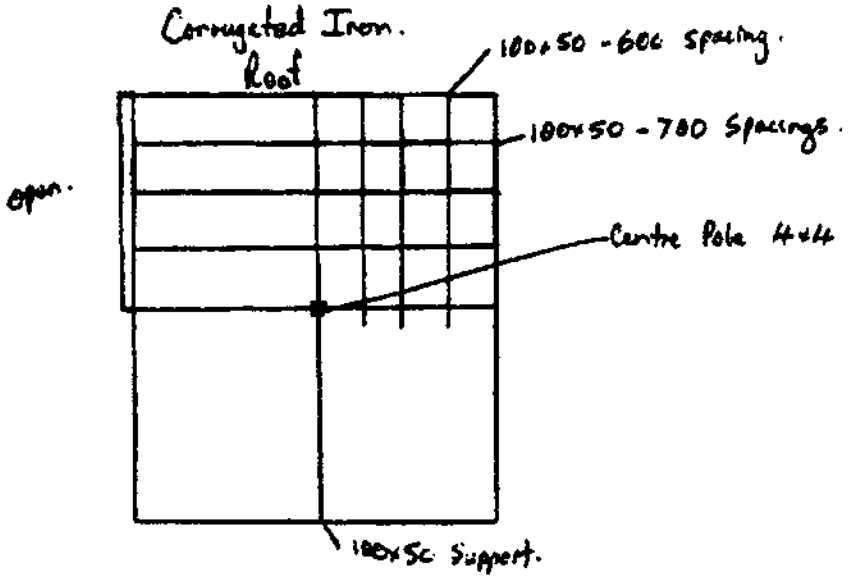

TOTAL Size OF building.
5.000 x 6.000 3.000 high

Opening on Front.

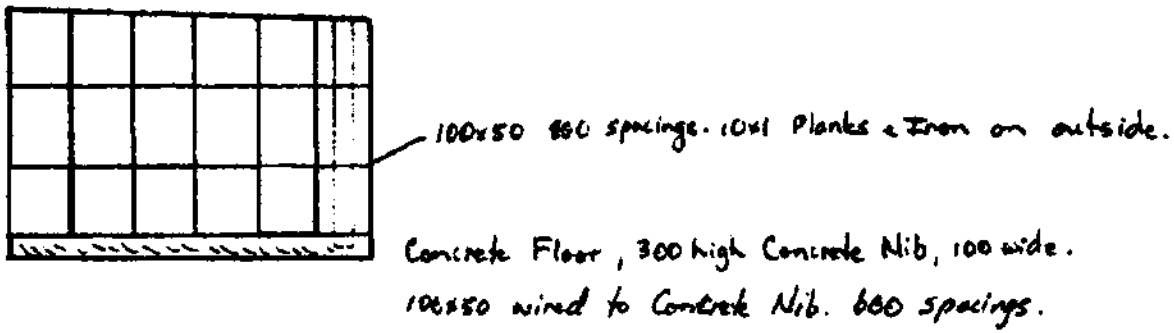

Ostrich Processing NZ Ltd.
Amenities Block APH2

Scale 1:400

Attention Sam.

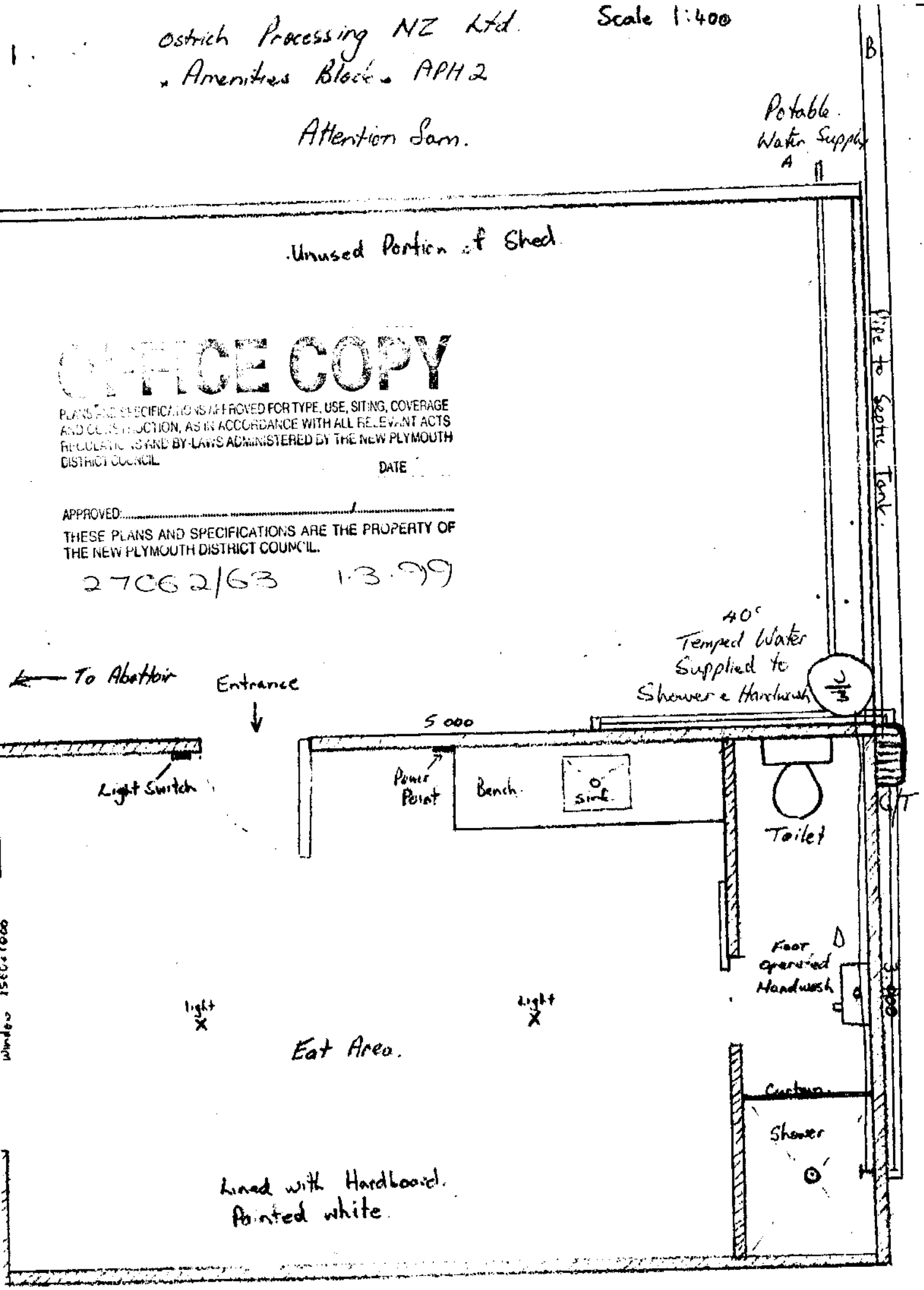

OFFICE COPY
PLANS AND SPECIFICATIONS APPROVED FOR TYPE, USE, SITING, COVERAGE AND CONSTRUCTION, AS IN ACCORDANCE WITH ALL RELEVANT ACTS REGULATIONS AND BY-LAWS ADMINISTERED BY THE NEW PLYMOUTH DISTRICT COUNCIL
DATE
APPROVED:
THESE PLANS AND SPECIFICATIONS ARE THE PROPERTY OF THE NEW PLYMOUTH DISTRICT COUNCIL.
27062/63 1.3.99

Diagram of Plumbing & Drainage.
APH 2

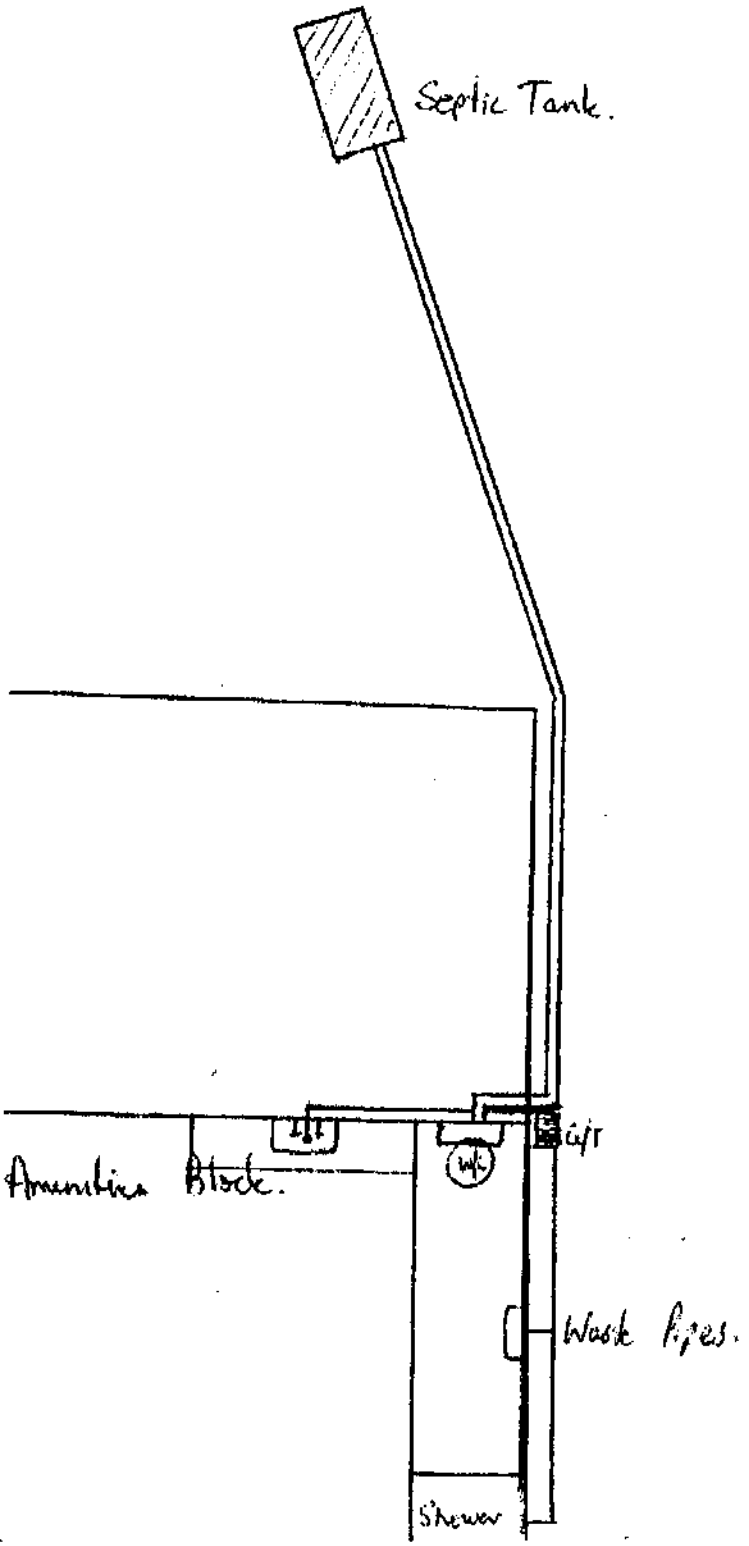

OPNZ Plymouth Road.
Site Plan APH 2

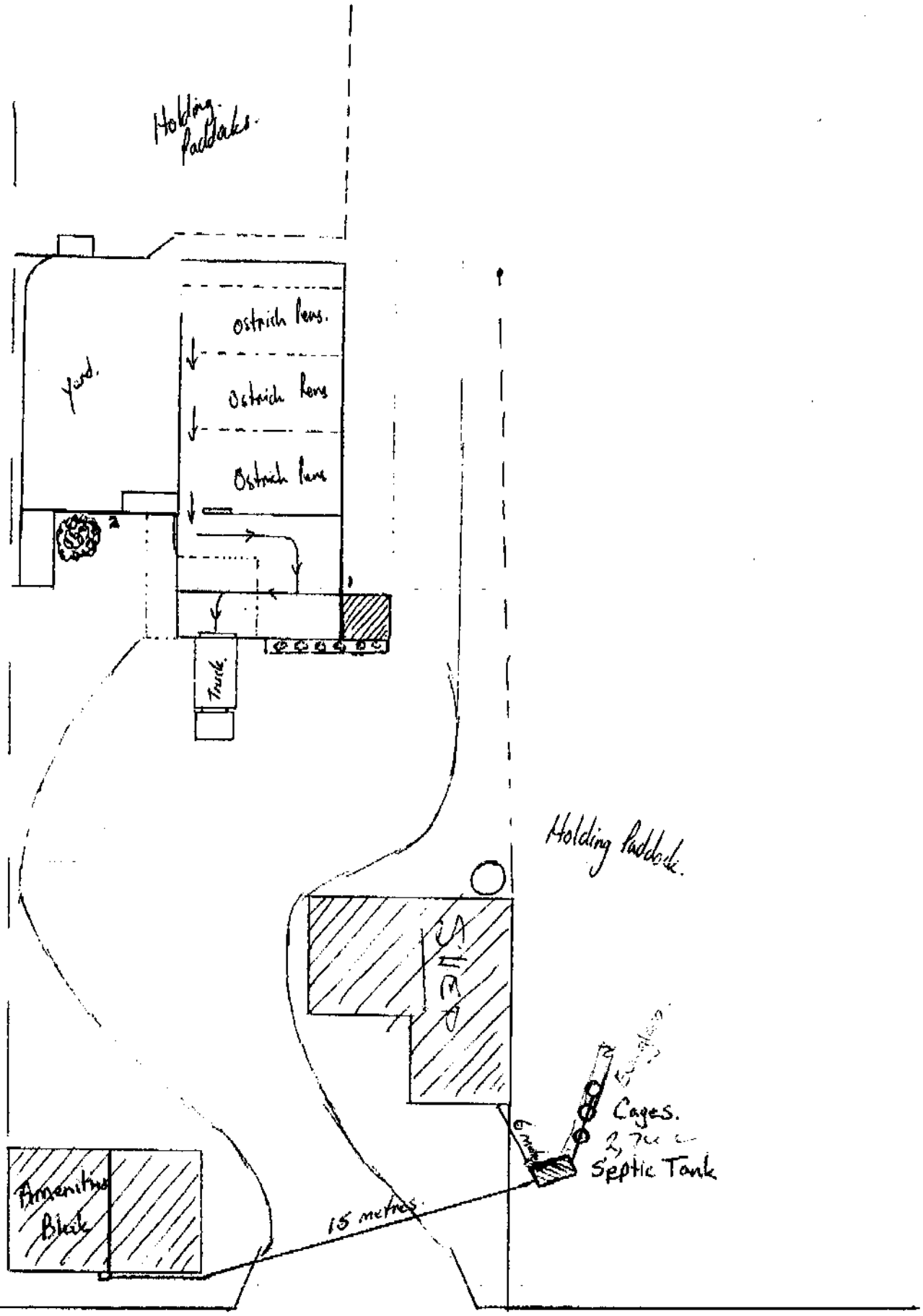

Plymouth Road.

APH 2

: Ostrich Processing NZ Ltd - Amenities Block.

Water Supply is Supplied by underground 25mm Pipe from Tank Supply from Abattoir. Treated Supply.

Waste Pipes go to Septic Tank across the track.

From the Abattoir to the Amenities block a distance of 30 metres. will have concrete Paving Blocks.

Paper towel holder & Soap dispensor will be situated on the wall above the handwash.

Gully Trap.

or is Smooth Concrete Finish - Walls & Ceiling are Painted dboard Smooth Wash Finish.

29/4/99
ATTENTION
PAT STEER.
REGARDS
PLUMBING
[redacted]

FAMILY
HARVEY TRUST BC27063
647 Plymouth Rd.
MAF
PROCESSING
PLANT.

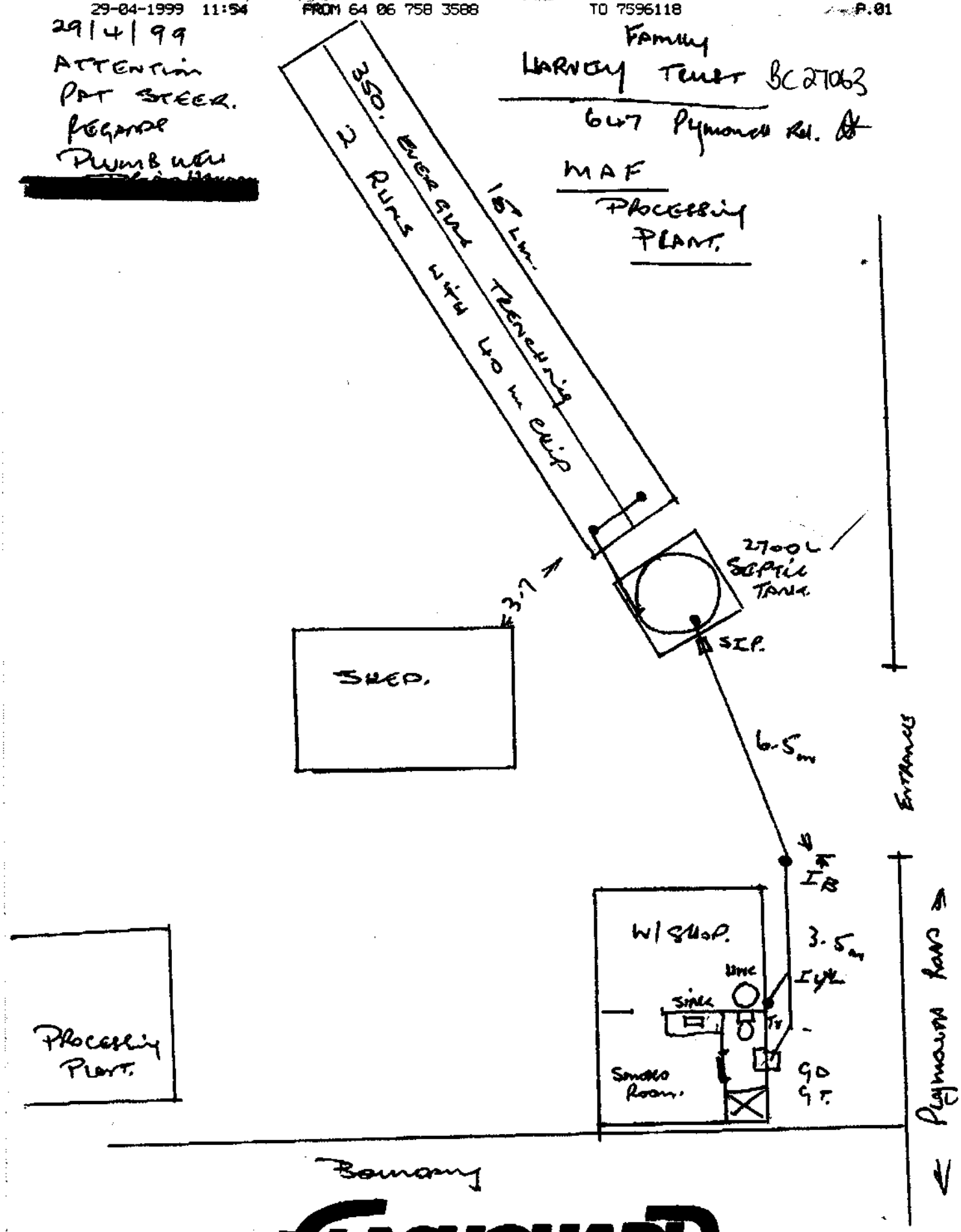

FLASHGUARD
The superior edge flashing

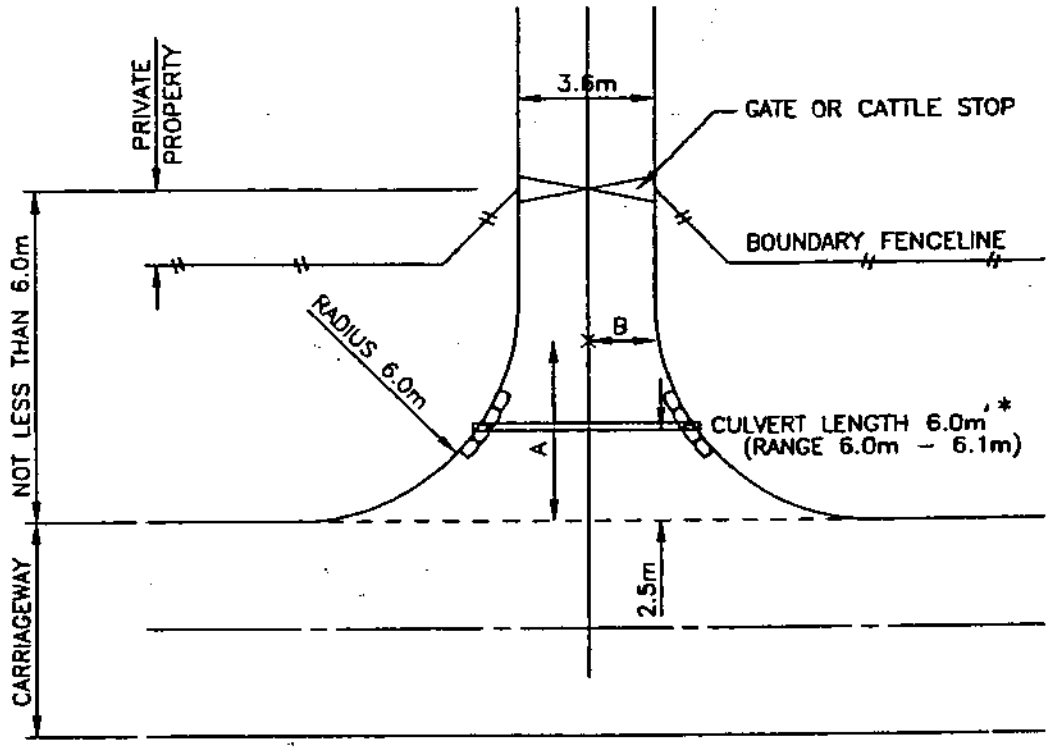

* TO MATCH EXISTING SITUATIONS THE FOLLOWING MAY BE USED WITH THE ENGINEERS APPROVAL

EITHER 7.8m (RANGE 7.5m – 8.0m)
OR 10.0m (RANGE 9.7m – 10.0m)

NOTE 1 : IF THERE IS AN EXISTING FOOTPATH IT IS TO BE REPLACED OVER THE WIDTH OF THE CROSSING UNLESS CONSTRUCTED OF 20 MPa CONCRETE 100mm THICK IN GOOD CONDITION AND ALIGNMENT

NOTE 2 : CULVERT ENDS TO BE PROTECTED BY A HEADWALL OR CONCRETE FILLED BAGS SPLAYED TO MATCH THE RADIUS AND DEPTH AS SHOWN IN END ELEVATION

NOTE 3 : CULVERT LENGTH CAN BE REDUCED IF OFFSET FURTHER BACK FROM EDGE OF ROAD

NOTE 4 : CULVERT TO BE 300mm INTERNAL DIAMETER CLASS Y PIPE UNLESS OTHERWISE APPROVED

NOTE 5 : THE CROSSING IS TO BE CONSTRUCTED OF BASECOURSE OR MORE PERMANENT MATERIAL

NOTE 6 : THE RADIUS FOR LIGHT COMMERCIAL VEHICLE CROSSINGS ON STATE HIGHWAYS SHALL BE 9.0m

DIMENSIONS FOR SETTING OUT VEHICLE CROSSING (METRES)	
A	B
1.5	3.8
5.0	1.9

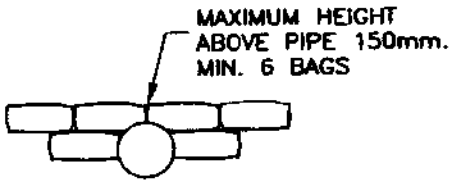

END ELEVATION

REV 1 (1/5/96) CULVERT LENGTH AND NOTES 2 & 4 AMENDED, NOTE 5 REMOVED, END ELEVATION ADDED

NEW PLYMOUTH DISTRICT COUNCIL

WORKS AND SERVICES DEPARTMENT

ENGINEER MANAGER : B.E. DAVEY
B.E.(HONS) M.E.(DIST) M.I.P.E.N.Z.

LOCATION/JOB

TYPE G RURAL RESIDENTIAL & LIGHT COMMERCIAL VEHICLE CROSSING

DRAWING TITLE

SITUATION:
NO KERB AND CHANNEL

CONSULTANT:	FIELDWORK
TECHNICAL SERVICES BUSINESS UNIT	DESIGNED L. BARNES
	DRAWN C. FARE
JOB No. R93-065	CHECKED
CAD No. ?	APPROVED
CLIENT:	RECOMM'D
JOB No.	APPROVED
CAD No.	DATE 1/5/96

ORIGINAL SCALES A4
NTS

DRAWING No. R-MRV-0002 SHT 9 of 10 REV. 1

BUILDING CONSENT

90P

PROPERTY ID 005877

90P

Document Set ID: 628817
Version: 1, Version Date: 08/10/2001

CITY ENGINEER'S DEPARTMENT

ASSESSED REQUIREMENTS
File No. P196·3

Project ALT DWG. Check Sheet No.
Owner HARVEY Sewer Sheet No. Plotted
Address 195 PLYMOUTH Rd Zone
Lot No. DP Sec No. Area of Site

BUILDING

Remarks: Structural

Please check Calculations.

Structural Engineer

Approved
Not Approved

18/8/93

Remarks: Fire

Fire Service

Recommended
Not Recommended

Document Set ID: 628817
Version: 1, Version Date: 08/10/2001

AMENDMENT

Calculation Sheet

Mark L. Batchelar
BE (Auck) ME (Cant) Regd Eng
MIPENZ MIEAust CPEng
Consulting Structural Engineer
Telephone NZ (09) 528 3499
Fax NZ (09) 528 3499

Client: McIntosh		Job No: 01593
Job: Harvey Residence Tamaki		Page No: 1
Designed: MLB		Date: 16/2/93

(Beam Here Plymouth Road)

Roof Load	DL	LL
Iron tiles	0.08	0.25
Battens	0.07	
Rafters	0.09	
Lining.	0.08	
	0.32	0.25

Wind Load : $V = 41$ m/sec.

$q = 0.613\,(0.7 \times 41)^2$

$= 0.50$ kPa

$C_{p_e} = -0.9 \qquad C_{p_i} = 0.3$

Rafters frame 4. $L = 4.9$ m

a) D+L

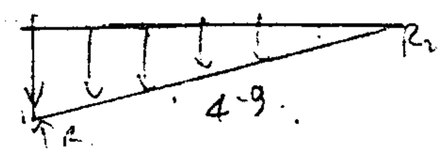

2.4×0.57
$= 1.37$ kN/m

$M_{max} = 0.128 \times \left(\frac{1.37}{2} \times 4.9 \times \cos 19\right) \times (4.9 \cos 19)$

$= 1.88$ kNm

b) 0.7 D + W

$M_{max} = 0.128\left[\frac{0.54}{2} \times (4.9 \times \cos 19)^2\right] -$

$0.128\left[((0.5 \times 1.2 \times 2.4)/2 \times 4.9\right] \times 4.9$

$= 0.74 \qquad -2.21$

$= -1.47$ kNm.

180×65 gluelam $\Rightarrow \delta_W = 0.012 \times \frac{1.44}{2} \times 4.9 \times 10^3 \times \frac{4.9 \times 10^3}{EI}$

$= \delta_{max}$

Document Set ID: 628817
Version: 1, Version Date: 08/10/2001

Calculation Sheet

Mark L. Batchelar
BE (Auck) ME (Cant) Regd Eng
MIPENZ MIEAust CPEng
Consulting Structural Engineer

Telephone NZ (09) 528 3499
Fax NZ (09) 528 3499

Calcs for	M c Intosh
Job	Harvey Residence Tauranga
Designed	MLB
Job No	01593
Page No	2
Date	18/2/93.

0.70 + W $\quad R_1 = 0.67 \times (1.25 - 3.53)$

$= -1.53$ kN.

$R_2 = -0.75$ kN.

Rafters frame 3. $\quad L = 4.9$ m

as for frame 3.

Rafters frame 1. $\quad L = 6.5$ m

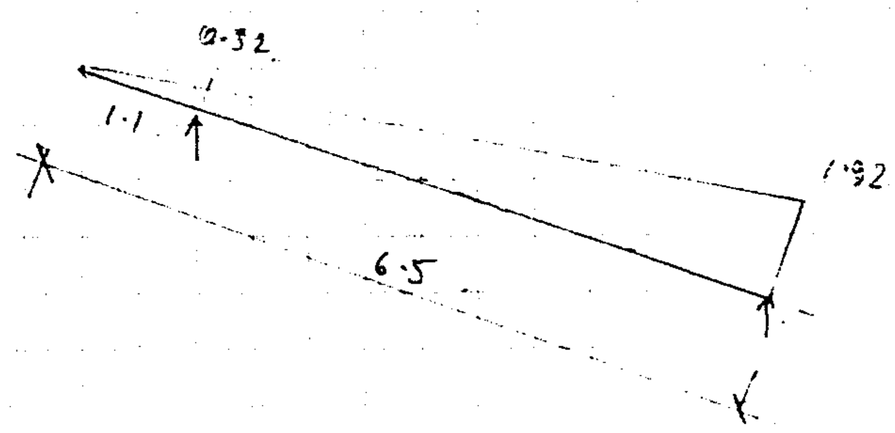

M_{max} 0.70 + W.

$= -0.128 \times [(\frac{1.6}{2} \times 5.4^2] - 0.32 \times 5.4^2/8$

$+ 0.128 [(\frac{0.72}{2} \times (5.4 \cos 19)^2]$

$= -2.99 - 1.17 + 1.20$

$= -2.96$ kNm.

190 × 45 $\quad \delta_w \Rightarrow 0.013 \times 1.12 \times 5.4 \times 10^3 \times \frac{5200^3}{EI}$

$= 39$ mm.

225 × 65 $\quad \delta_w = 20$ mm $\quad (0.004 \times$ span$)$

270 × 90 Rafters $\quad \delta_w = 8$ mm.

Document Set ID: 628817
Version: 1, Version Date: 08/10/2001

Calculation Sheet

Mark L. Batchelar
BE (Auck) ME (Cant) Regd Eng
MIPENZ MIEAust CPEng
Consulting Structural Engineer
Telephone NZ (09) 528 3499
Fax NZ (09) 528 3499

Calcs for: Mc Intosh	Job No: 01593
Job: Harvey Residence Tairua	Page No: 3
Designed: MLB	Date: 18/2/13

Rafters bone 2

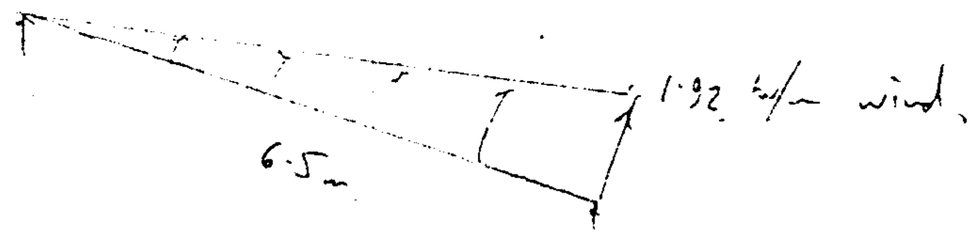

M_{max} 0.7D + W

$= -0.428 \times 1.92 \times \frac{6.5}{2} \times 6.5 + 0.128 \quad \frac{0.72}{2} (6.5 \cos 19)^2$

$= -5.19 + 1.74$

$= -3.45$ kNm 225×90 ⇒ $M_{basic} = 8.0$ kNm

$\delta_w = 0.013 \times 6.26 \times \frac{6500^3 \times 10^3}{EI}$

$= 26$ mm. (0.004 L)

∴ Use 270×90 Rafters with 6mm precamber

Calculation Sheet

Mark L. Batchelar
BE (Auck) ME (Cant) Regd Eng
MIPENZ MIEAust CPEng
Consulting Structural Engineer
Telephone NZ (09) 528 3499
Fax NZ (09) 528 3499

Calcs for: McIntosh	Job No: 0159 J
Job: Harvey Residence Tamaki	Page No: 4
Designed: MLB	Date: 13/2/92

Rafter Apex Joint

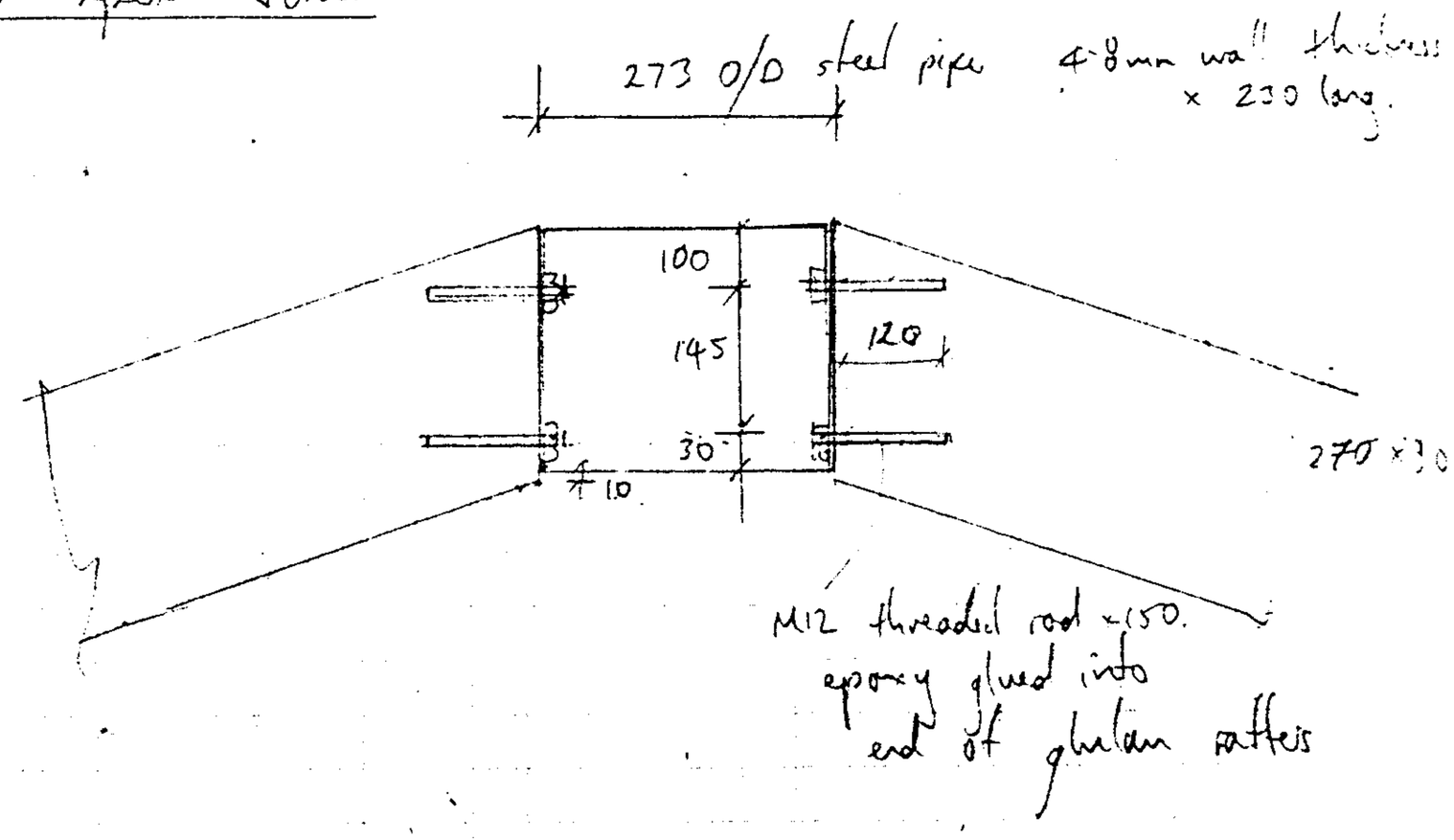

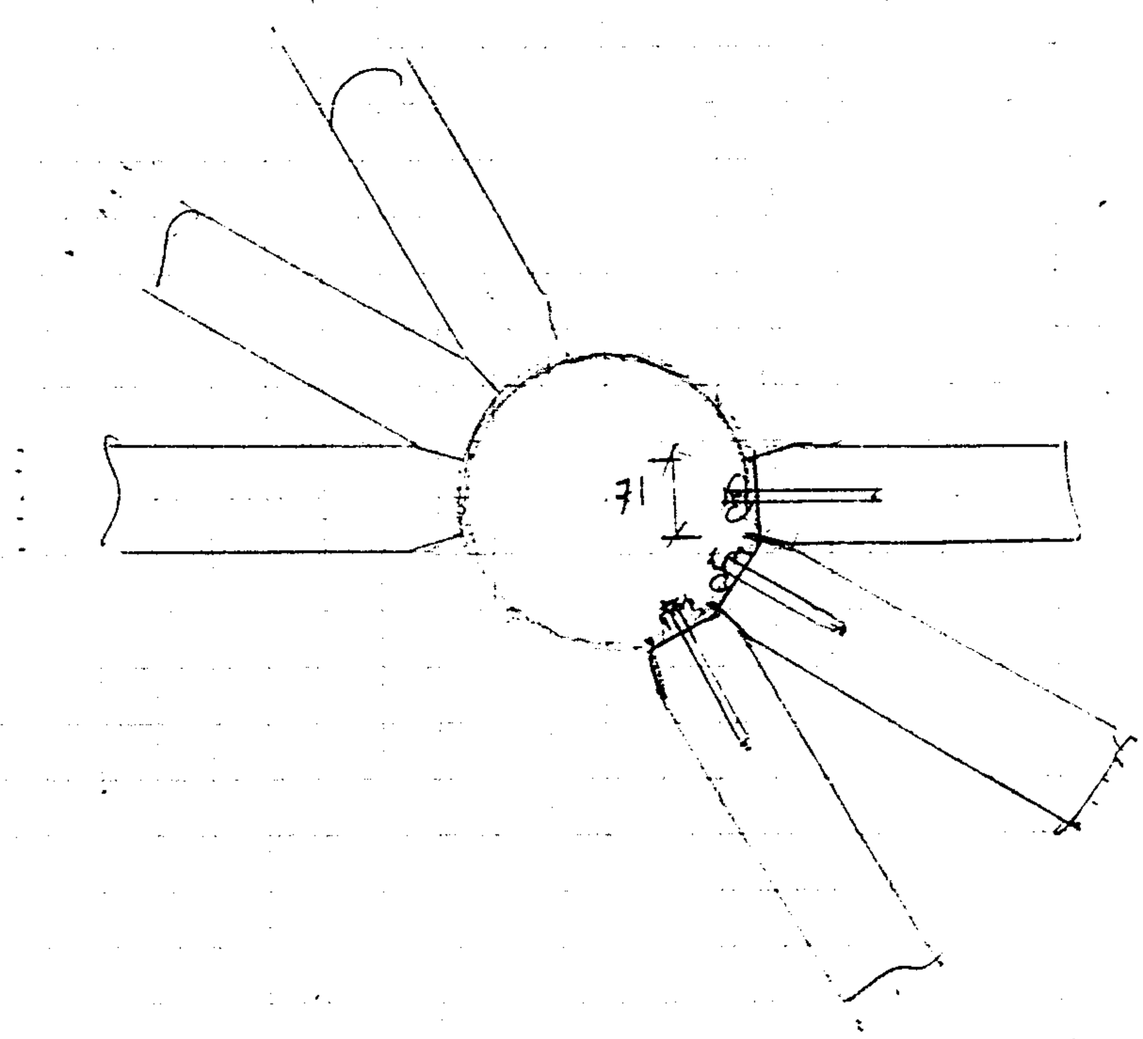

Max shear/rafter (3 rafters propped off support wall

$= \frac{9}{3} \times 0.75 = 2.25$ kN

Safe pull-out on threaded rod = 10.5 kN

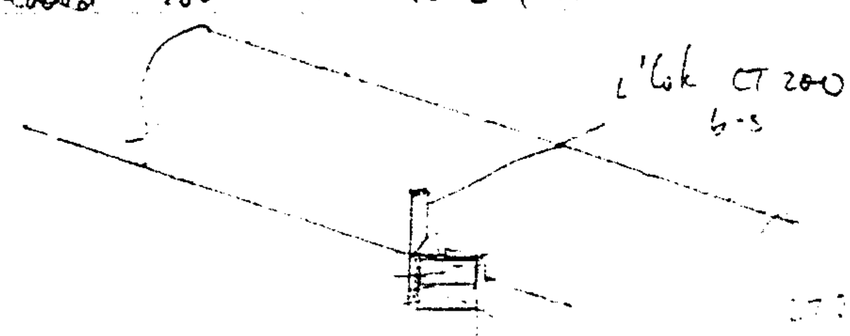

Document Set ID: 628817
Version: 1, Version Date: 08/10/2001

Calculation Sheet

Mark L. Batchelar
BE (Auck) ME (Cant) Regd Eng
MIPENZ MIEAust CPEng
Consulting Structural Engineer
Telephone NZ (09) 528 3499
Fax NZ (09) 528 3499

Calcs for	McIntosh
Job	Harvey Residence Takanini
Designed	MLB
Job No	01593
Page No.	5.
Date	18/2/93

Floor Load	DL	LL
20mm p.b.	0.14	1.5
Joists	0.13	
Glulam beams	0.15	
Ceiling.	0.10	
	0.52	1.5

Partition load 0.6 kN/m

Floor Beam

$M_{max\ D+L} = 0.128 \times \left(2.02 \times \frac{2.4}{2} + 0.6\right) \times 6^2$

$= 13.9$ kNm 360×90 $M_{bcap} = 20.6$ kNm

$\delta = 0.013 \times 18.14 \times 10^3 \times \frac{6000^3}{10 \times 10^3 \times \frac{360^3 \times 90}{12}}$

$= 14.6$ mm (0.0024 L)

$\delta_{LL} = 8.7$ mm (0.0014 L)

⊗ Use 360×90 No1 Kwd Glulam 14% mc with 6mm precamber.

Max end shear $= 0.67(6 \times 1.6 \times 2.02 + 6 \times 0.6)$

$= 15.4$ kN.

End shear @ hub $= \frac{15.4}{2} = 7.7$ kN

Max post load $= 7.7 \times 9 = 69.3$ kN

⊗ Use 4 ex 100×50 framed into wall.

⇒ safe axial load $= 4 \times 13 \times 1.4$

$= 72.8$ kN

⊗ Use 750×750 ∅ 10m pad under.

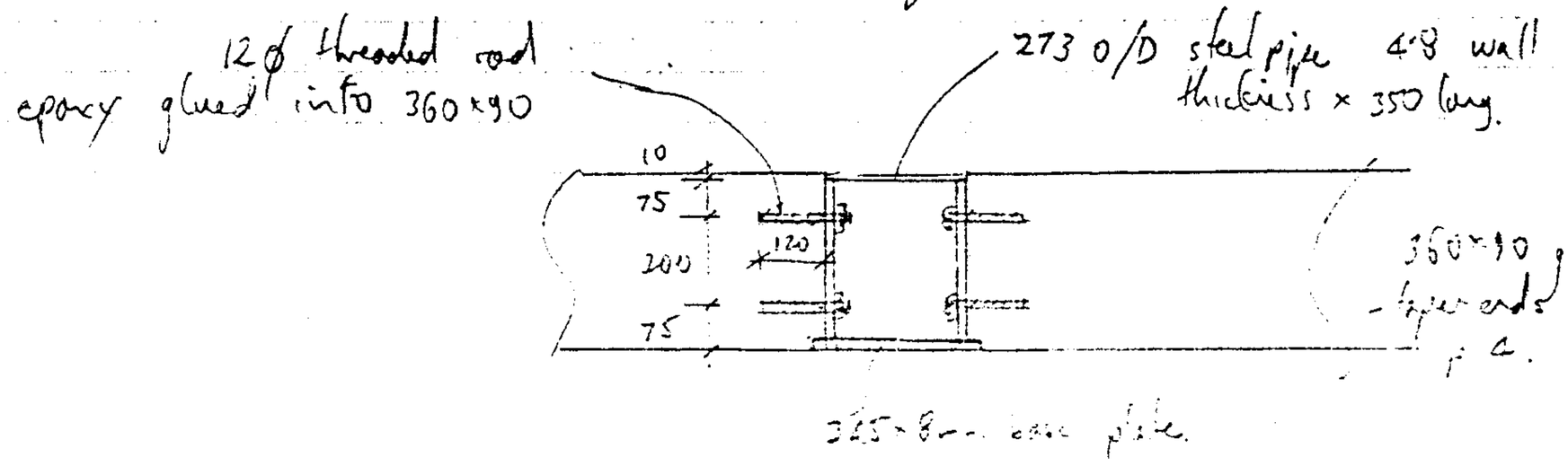

Calculation Sheet

Mark L. Batchelar
BE (Auck) ME (Cant) Regd Eng
MIPENZ MIEAust CPEng
Consulting Structural Engineer
Telephone NZ (09) 528 3499
Fax NZ (09) 528 3499

Calcs for: McIntosh	Job No: 01593
Job: Harvey Residence Taranaki	Page No: 6.
Designed: MLB	Date: 22/2/93.

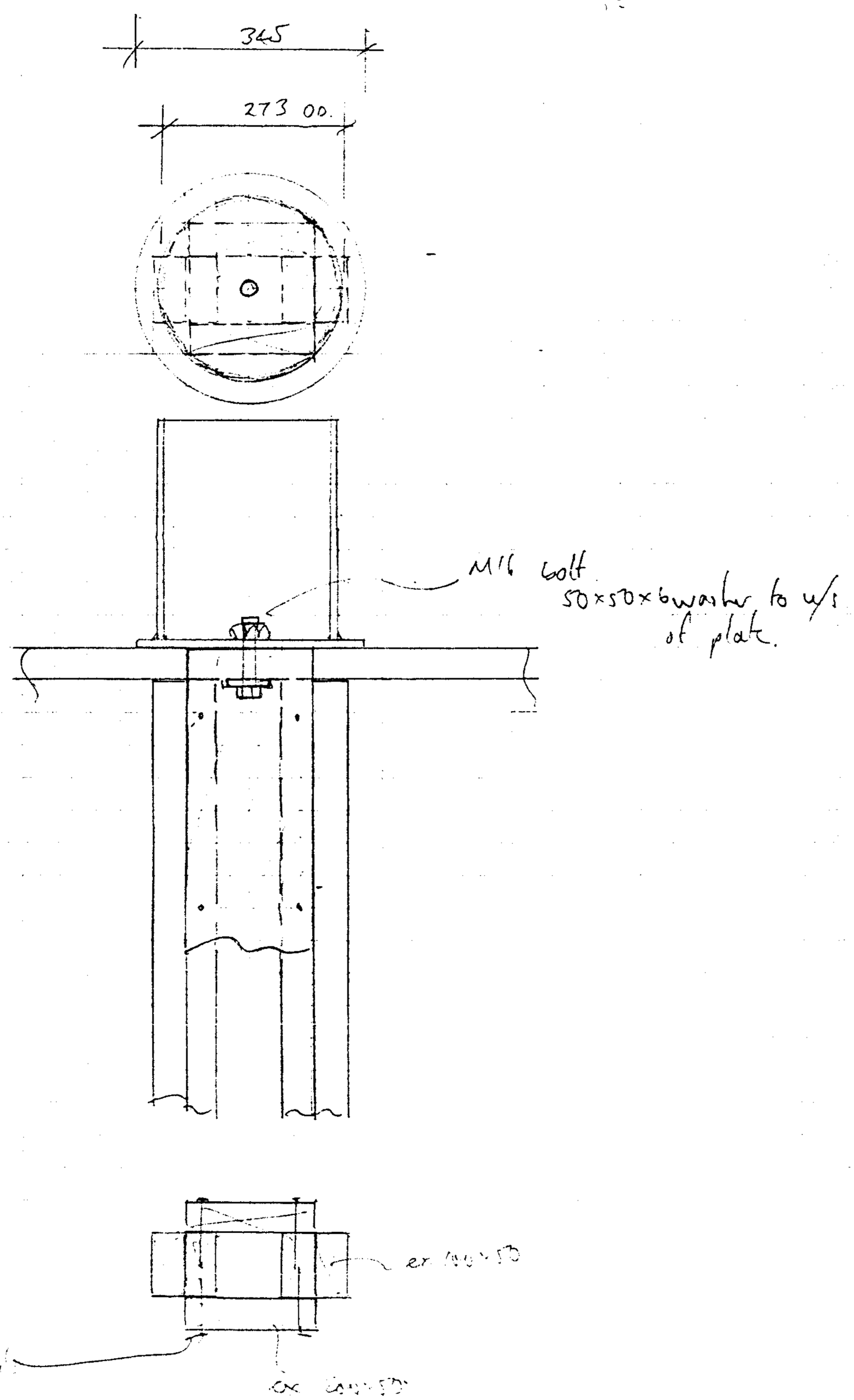

Document Set ID: 628817
Version: 1, Version Date: 08/10/2001

Calculation Sheet

Mark L. Batchelar
BE (Auck) ME (Cant) Regd Eng
MIPENZ MIEAust CPEng
Consulting Structural Engineer
Telephone NZ (09) 528 3499
Fax NZ (09) 528 3499

Calcs for: McIntosh	Job No: 01593.
Job: Heavy Residence Tararai	Page No: 7.
Designed: MLB.	Date: 22/2/93

Glulam Cols:

Roof load

DL = 2.1 kN
LL = 1.6 kN
3.7 kN.

Floor load.

DL = 3.3 kN
LL = 9.7 kN
13.0

Max lower col. load = 13.0 + 2.1 = 15.1 kN.

∴ Use 225 × 90.

Max. wind load on face = 1.1 × 3.2 × 0.5
= 1.76 kN/m.

$$M_{max} = \frac{1.76 \times 2.4^2}{8}$$

= 1.3 kNm

Beam/Col connection for mezzanine frames.

2 M16 // grain with steel side plates

→ 5.69 × 1.25 × 2 × 1.4 = 19.2 kN.

Beams (2).

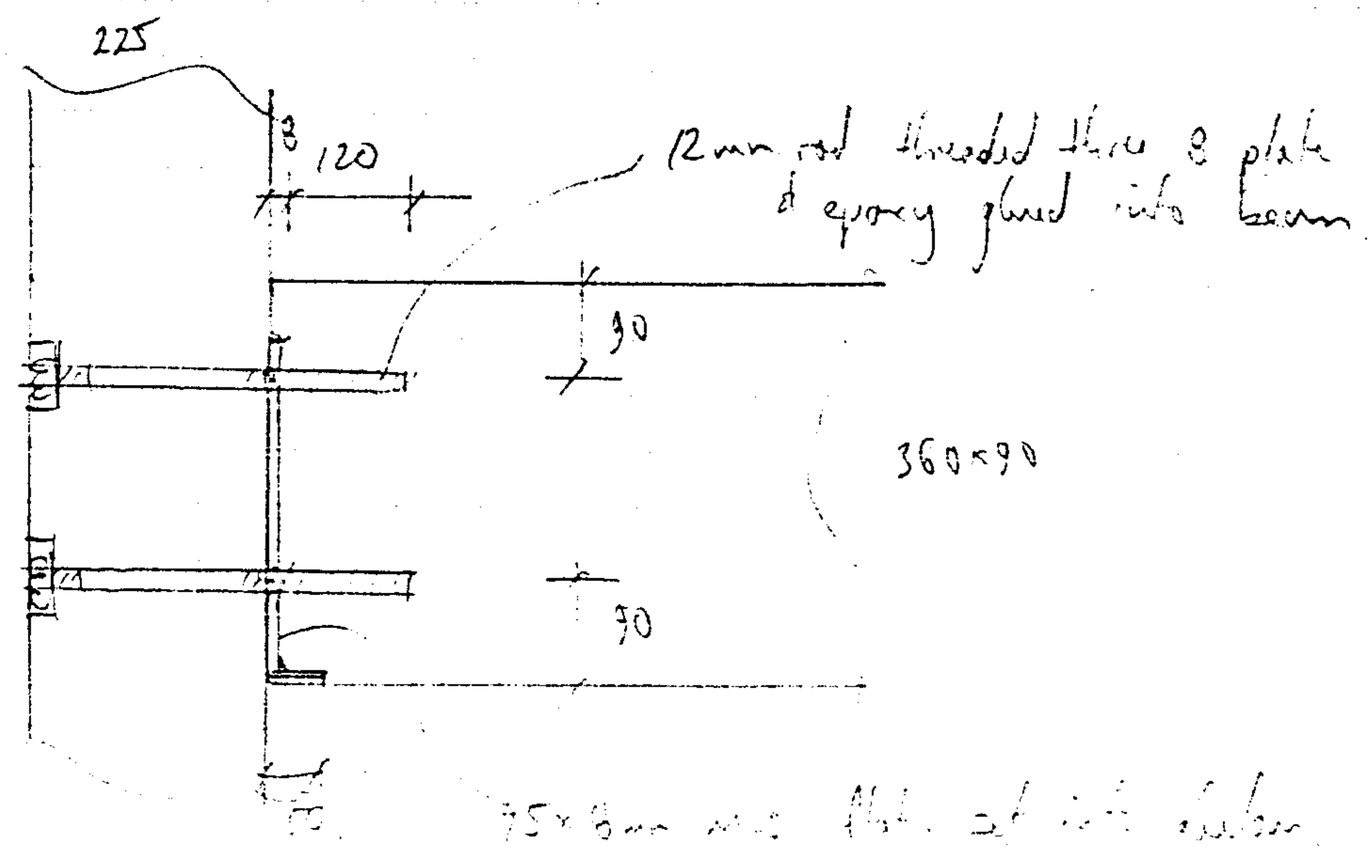

Document Set ID: 628817
Version: 1, Version Date: 08/10/2001

Calculation Sheet

Mark L. Batchelar
BE (Auck) ME (Cant) Regd Eng
MIPENZ MIEAust CPEng
Consulting Structural Engineer
Telephone NZ (09) 528 3499
Fax NZ (09) 528 3499

Calcs for: McIntosh		Job No: 01573
Job: Harvey Residence Taranaki		Page No: 8
Designed: MLB		Date: 23/2/93

Frame (2) rafter/col connection

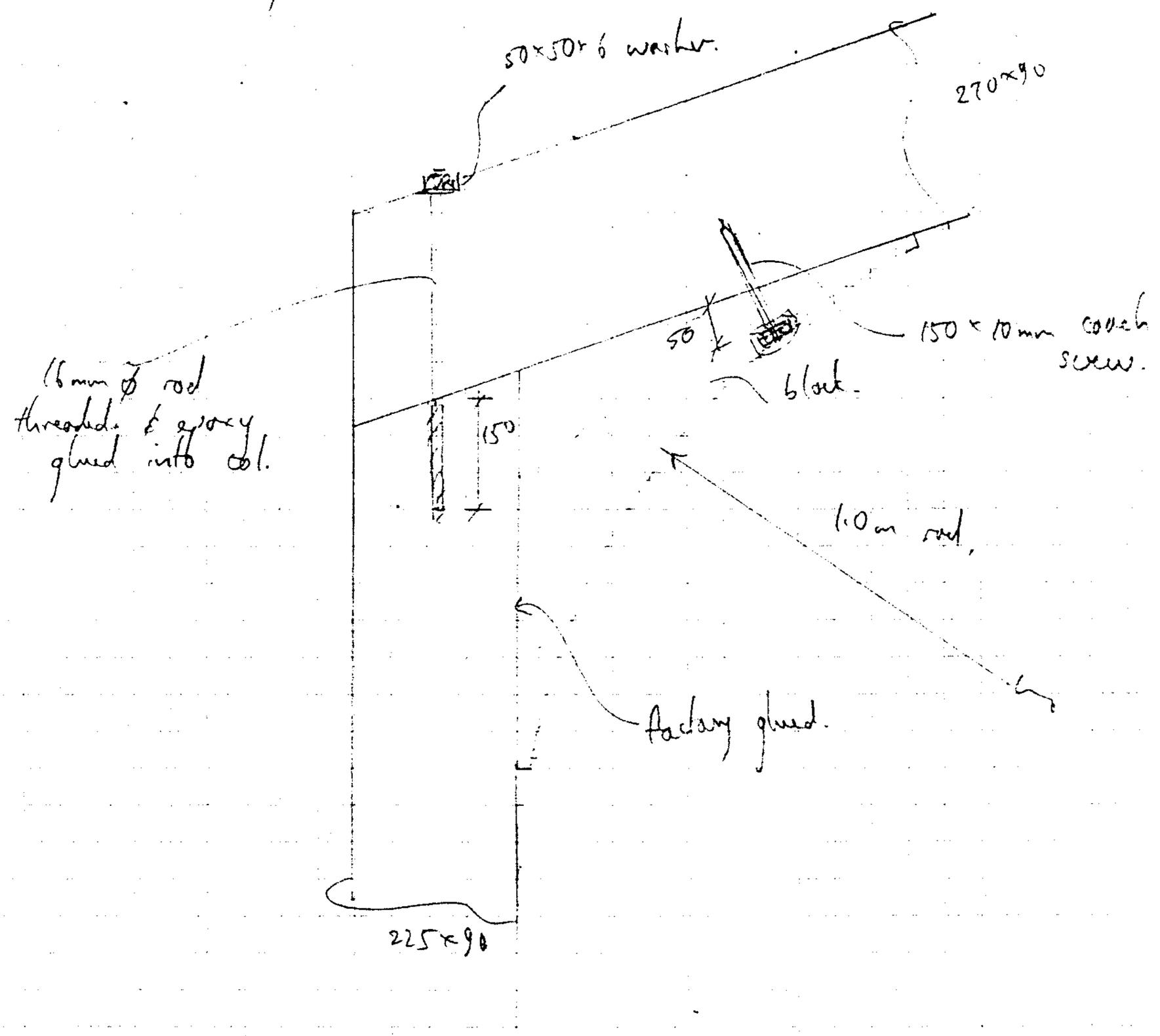

Frame (3) & (1) floor beam/col connection

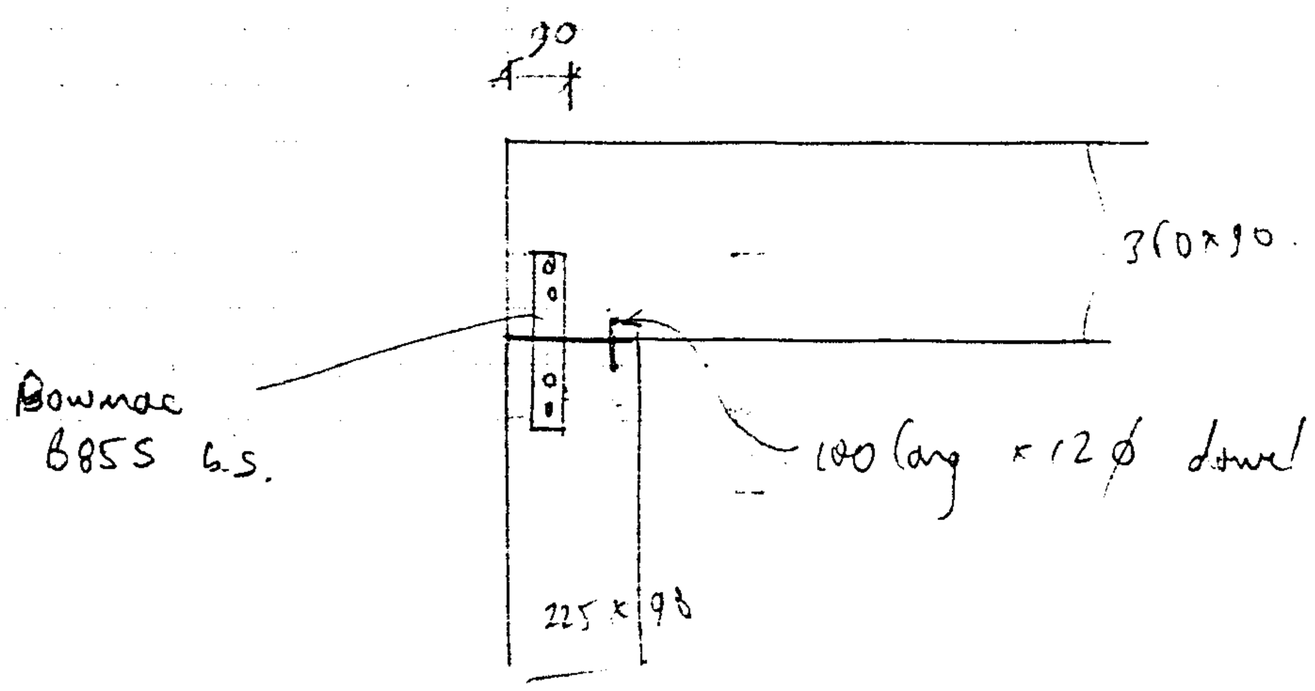

Document Set ID: 628817
Version: 1, Version Date: 08/10/2001

Calculation Sheet

Mark L. Batchelar
BE (Auck) ME (Cant) Regd Eng
MIPENZ MIEAust CPEng
Consulting Structural Engineer
Telephone NZ (09) 528 3499
Fax NZ (09) 528 3499

Calcs for: M Tidosh	Job No: 01593
Job: Harvey Kitchens Takanini	Page No: 5
Designed: MLB	Date: 23/2/93

Typical Post Base Fixing

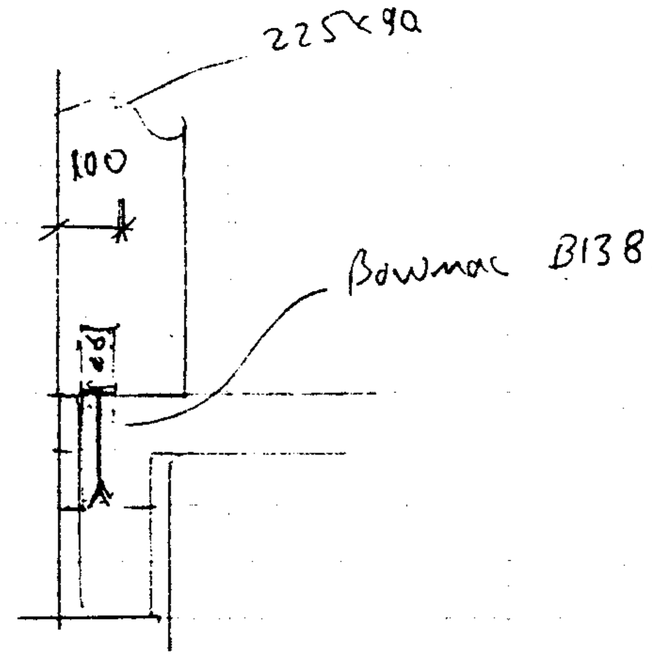

Bracing

Seismic load:

Roof = 2.4 × 0.125 × 0.32 × 100

= 9.6 kN.

1st Floor = 2.4 × 0.125 × [0.52 × (100 − 11) + 0.32 × 13 roof].

= 15.1 kN.

Reqd b.u. to upper level = 192.
" " to lower " = 496

Wind load:

Upper level = 0.5 × 1.3 × 12 × 2 = 15.6 kN. 312 b.u.
Lower level = 0.5 × 1.3 × 12 × 4 = 31.2 kN. 620 b.u.

Wind governs. bracing requirement.
Upper level 3.4 m of BR4 required each way
Lower level 6.6 m of BR6 " "

Document Set ID: 628817
Version: 1, Version Date: 08/10/2001

Document Set ID: 628817
Version: 1, Version Date: 08/10/2001

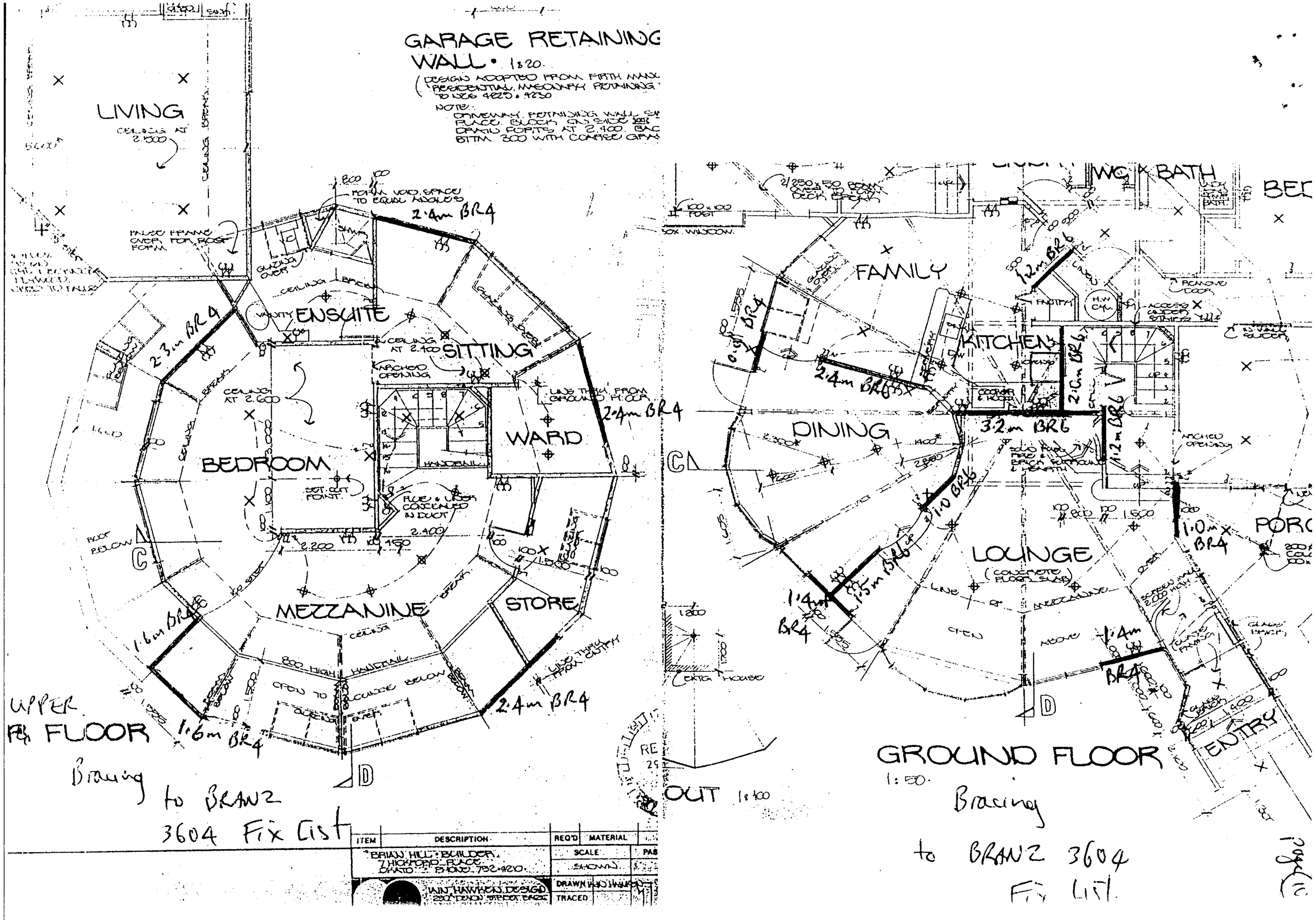

Calculation Sheet

Mark L. Batchelar
BE (Auck) ME (Cant) Regd Eng
MIPENZ MIEAust CPEng
Consulting Structural Engineer

Telephone NZ (09) 528 3499
Fax NZ (09) 528 3499

Calcs for	Job No
McIntosh	01593
Job: Harvey Lodge Taranaki	Page No: 11
Designed: MLB	Date: 24/2/93

LAMINATED TIMBER

TIMBER:
Timber for use in laminated members shall be boric treated No.1 Framing Grade Radiata Pine. Grading of laminations shall be as set out in NZS 3606:1979 "The Manufacture of Glue Laminated Timber".

ADHESIVE:
In general the adhesive used in fabrication shall be melamine fortified urea complying with the requirements of NZS 1155 for gap filling adhesives.

FABRICATION:
Only fabricators certificated by the Standards Association of New Zealand will be accepted.
End joints in adjacent laminations shall not occur closer than 4 times the thickness of the lamination.
End joints shall not occur in more than one third of the laminations at any cross section.

Members shall have a UTILITY finish and the size of the finished members shall be as noted on the drawings.

TESTING:
If requested the manufacturer shall supply the results of routine tests done in compliance with the Standards Association of New Zealand requirements for checking glue quality and laminate end joint strength.

WALL BRACING ELEMENTS

BRACING WALLS:
Wall bracing elements with BRANZ 3604 FIX LIST specification shall be fixed in accordance with the requirements of 3604:1990.

BRACING/FIRE WALLS:
~~Unless noted othewise fixing of Gibraltar board panels shall be in accordance with the appropriate section of Winstone's Fire/Acoustic Gibraltar Board Systems Manual 1991. Where closer than standard spacing of fasteners is noted on the drawings these must be strictly followed to satisfy bracing requirements.~~ N/A

FLOOR DIAPHRAGMS

All particle board flooring shall be fixed in accordance with the nailing schedule Table A1 NZS3604:1990 for sheet decking.

Document Set ID: 628817
Version: 1, Version Date: 08/10/2001

Document Set ID: 628817
Version: 1, Version Date: 08/10/2021

281500mE
281750mE
282000mE
698500mN
698250mN
698000mN

158
CT 129/169 Ltd
B.M. & M.K. Green

PT 116
CT G1/258 Ltd
TC & PS Denham

OMATA
OAKURA
DISTRICT
DISTRICT

1
20·4012ha

PT 159
CT 197/52 Ltd
S.A. & M.A. Guthrie

PT 159
CT 197/53 Ltd
SW & JM Pope

1
DP 16589
CT H4/483
T.C. & P.S. Denham

PLYMOUTH LEGAL ROAD

ROAD 20·12 WIDE

KIRIHAU ROAD

1
DP 7977
CT 213/54
SW & JM Pope

PT 160

PT 160
CT 213/55
SW & JM Pope

2
4921m²

67° 18' 20"
367·97
67° 32' 30"
393·28
157° 27' 00"
272·18
157° 41'
1·06
231·02
247° 43' 30"
(529·81)
298·79
319° 54'
49·35
67° 00'
42·65
319° 18'
41·97
304° 14' 20"
96·50
321° 50'
118·11
304° 18' 30"
37·14
(74·14)
37·00
212° 54'
31·83
Bal CT 27·29
235° 54'
59·38
226° 06'
32·63
253° 14' 30"
72·60
167° 08'
35·83
115° 35'
20·83
275° 05'
12·74
218° 54'
31·31
222° 46'
43·20

DIAGRAM of UNDERLYING AREAS

not to scale

1

1
DP 7977
800m²

PT 160
2836m²

PT 159
68m²

PT 160
3192m²

2

1
DP 7977
677m²

PT 160
984m²

LAND DISTRICT Taranaki
SURVEY BLK. & DIST. 1 Egmont
NZMS 261 SHT P 19 **RECORD MAP No** G:3 6:4

LOTS 1 AND 2 BEING A SUBDIVISION
OF LOT 1 DP 7977, AND PART SECTIONS 159
AND 160 OAKURA DISTRICT

TERRITORIAL AUTHORITY New Plymouth District
Surveyed by McKinlay & Co
Scale 1:2500 Date October 1990

Approvals

Registered Proprietors

Pursuant to a resolution of the New Plymouth District Council passed on the 25th day of November 1990 approving under Section 305 of the Local Government Act 1974 this plan of subdivision and certifying that the plan is in accordance with the requirements and provisions of the operative district scheme the common seal of THE NEW PLYMOUTH DISTRICT COUNCIL WAS affixed hereto.

SEALED with the Common Seal of THE NEW PLYMOUTH DISTRICT COUNCIL in the presence of: ADMINISTRATIVE OFFICER of the New Plymouth District Council and by direction of the said council in the presence of:

THE NEW PLYMOUTH DISTRICT COUNCIL — The Common Seal of

In the matter of Land Transfer Plan No. DP 16942 and pursuant to Section 306(1)(a)(i) of the Local Government Act 1974 I do hereby certify that all the conditions shown on or referred to on the scheme plan of the within subdivision have been complied with to the satisfaction of the New Plymouth District Council.

Dated at New Plymouth this _____ day of _____ 19__

_____
Principal Administrative Officer

Total Area 20·8933ha

Comprised in CT's 197/53 Ltd(ALL), 213/54 (ALL) 213/55(PART)

I, Colin Peter Forbes McKinlay
Registered Surveyor and holder of an annual practising certificate (or who may act as a registered surveyor pursuant to section 25 of the Survey Act 1986) hereby certify that this plan has been made from surveys executed by me or under my directions, that both plan and survey are correct and have been made in accordance with the Survey Regulations 1972 or any regulations made in substitution thereof.
Dated at NEW PLYMOUTH this 7TH day of NOVEMBER 1990 Signature

Field Book 1839 p. 21-25 Traverse Book 195 p. 40-41
Reference Plans
Examined Correct

Approved as to Survey
27/2/91 Acting Chief Surveyor

Deposited this 4th day of April 1991
District Land Registrar

File
Received 8 Dec 90
Instructions

DP 16942

W.A. ROBERTSON, SURVEYOR GENERAL, DEPARTMENT OF SURVEY AND LAND INFORMATION, NEW ZEALAND

Printed by Litho Plus Wellington, New Zealand

22 FEB 1993

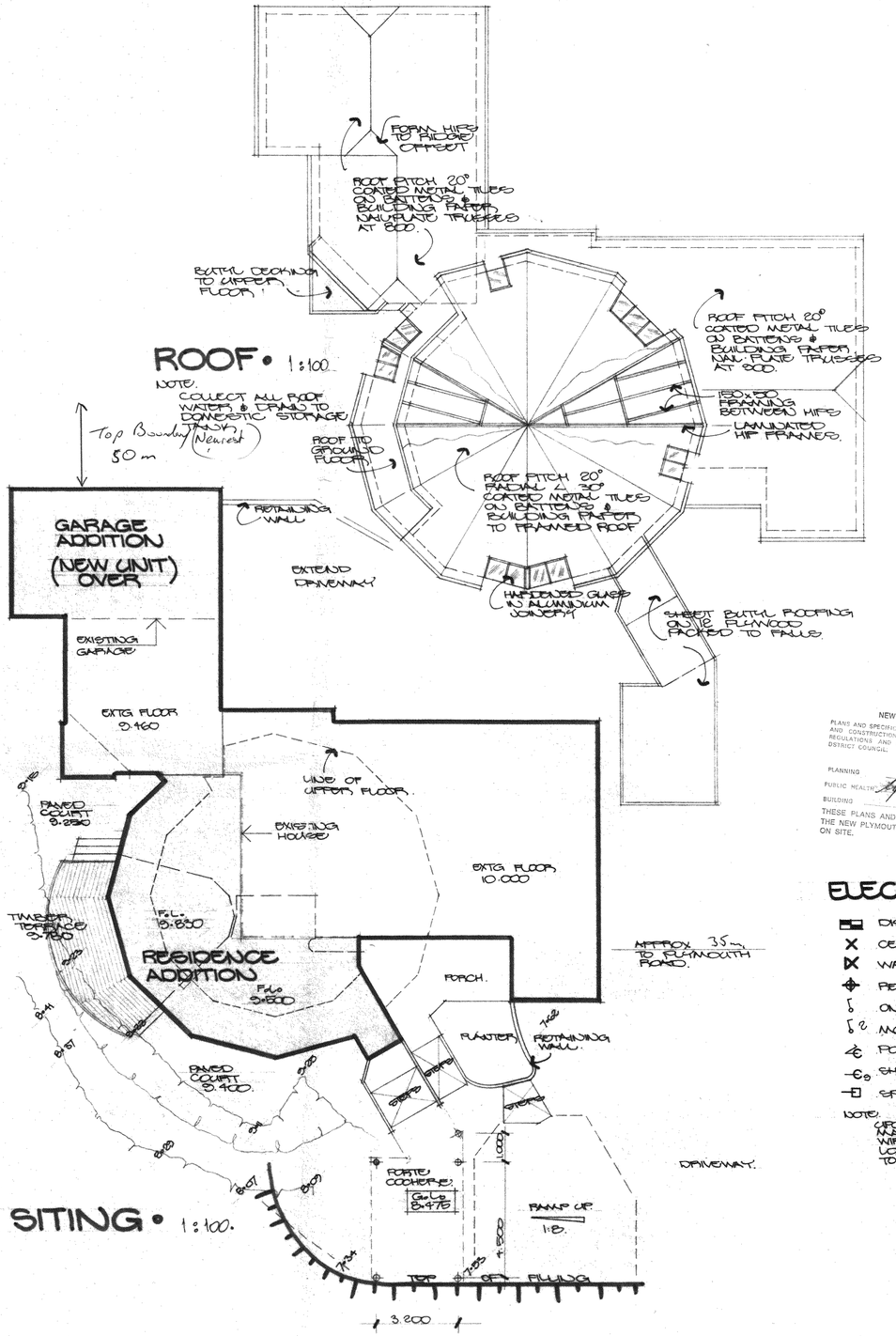

NEW PLYMOUTH DISTRICT COUNCIL

PLANS AND SPECIFICATIONS APPROVED FOR TYPE USE, SITING COVERAGE AND CONSTRUCTION AS IN ACCORDANCE WITH ALL BUILDING ACT REGULATIONS AND BY-LAWS ADMINISTERED BY THE NEW PLYMOUTH DISTRICT COUNCIL.

PLANNING
PUBLIC HEALTH — DATE 20/2/93
BUILDING — 3-3-93

THESE PLANS AND SPECIFICATIONS ARE THE PROPERTY OF THE NEW PLYMOUTH DISTRICT COUNCIL AND MUST BE KEPT ON SITE.

ELECTRICAL •

- DISTRIBUTION - FUSE BOARD.
- CEILING LIGHT FITTING
- WALL LIGHT FITTING
- RECESSED DOWNLIGHT.
- ONE WAY SWITCHED CIRCUIT
- MULTIPLE SWITCHED CIRCUIT
- POWER POINT
- SHAVER POINT
- SPA CONTROLS & HEATER.

NOTE:
UPGRADE EXISTING BOARD & MAINS TO COMPLY WITH WIRING REGULATIONS. LOCATE MAIN SWITCH & METERS TO OUTSIDE WALL.

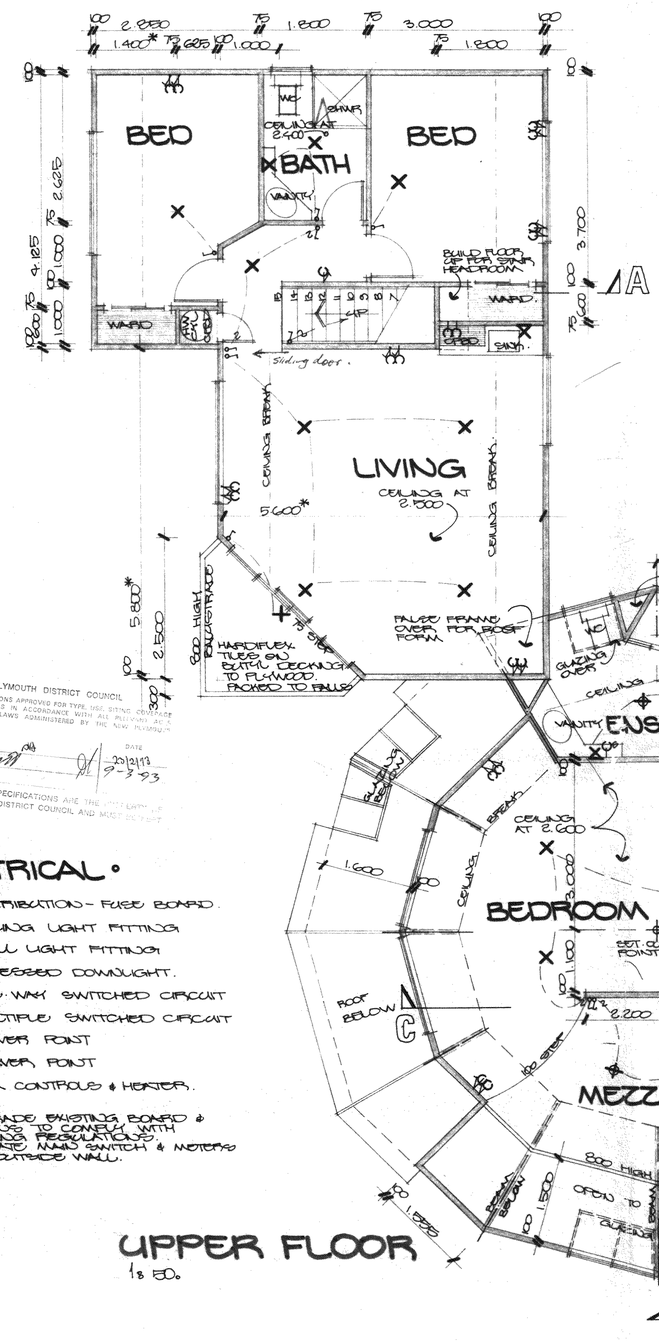

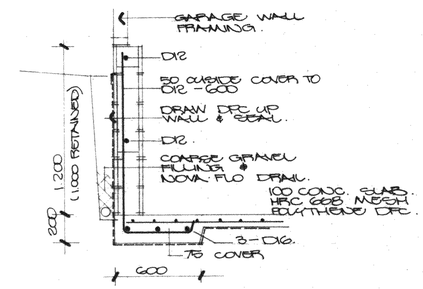

GARAGE RETAINING WALL • 1:20.

(DESIGN ADOPTED FROM FIFTH MANUAL 'RESIDENTIAL MASONRY RETAINING WALLS' TO NZS 4229 & 9230

NOTE:
DRIVEWAY RETAINING WALL SIMILAR. PLACE BLOCK ON SIDE TO FORM DRAIN FORTS AT 2.400. BACKFILL BTTM 300 WITH COARSE GRAVEL.

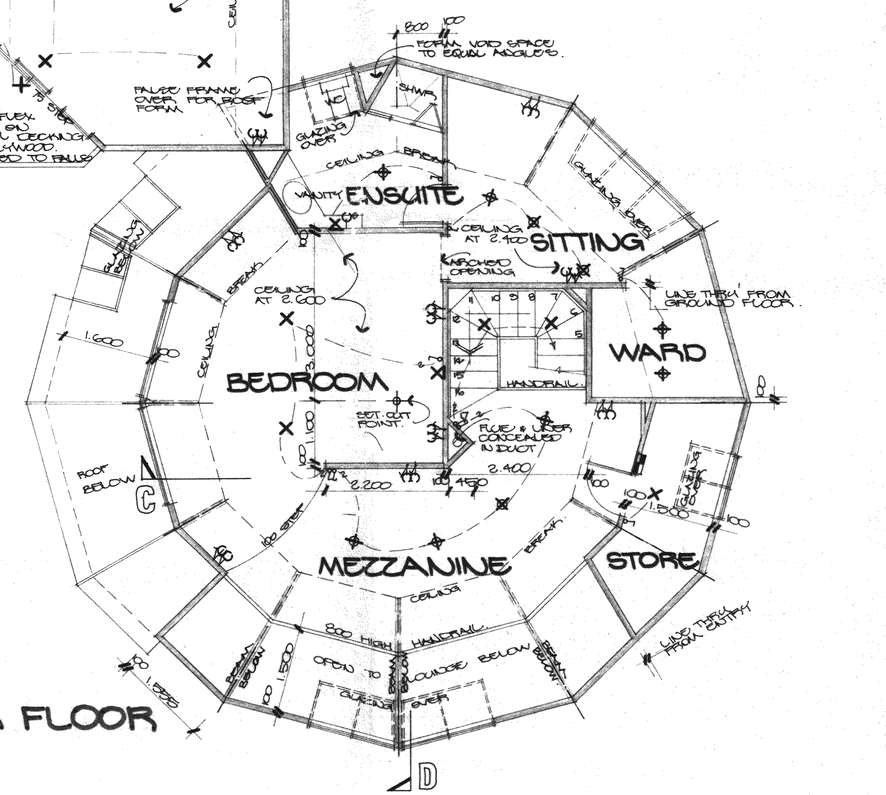

HARVEY RESIDENCE - UPPER PLYMOUTH ROAD -

ITEM	DESCRIPTION	REQ'D	MATERIAL	REMARKS
BRIAN HILL • BUILDER. 7 HICKFORD PLACE, OAKURA • PHONE 752-4210.		SCALE SHOWN.	PASSED	DATE JULY 93.
IAIN HAWKEN DESIGN 230A DEVON STREET EAST. NEW PLYMOUTH. PHONE 758-7102 : BOX 3176.		DRAWN IAIN HAWKEN		DRAWING NUMBER 1
		TRACED		
		CHECKED		

A1 Printed By ALLIANCE

Document Set ID: 629827
Version: 1, Version Date: 08/10/2001

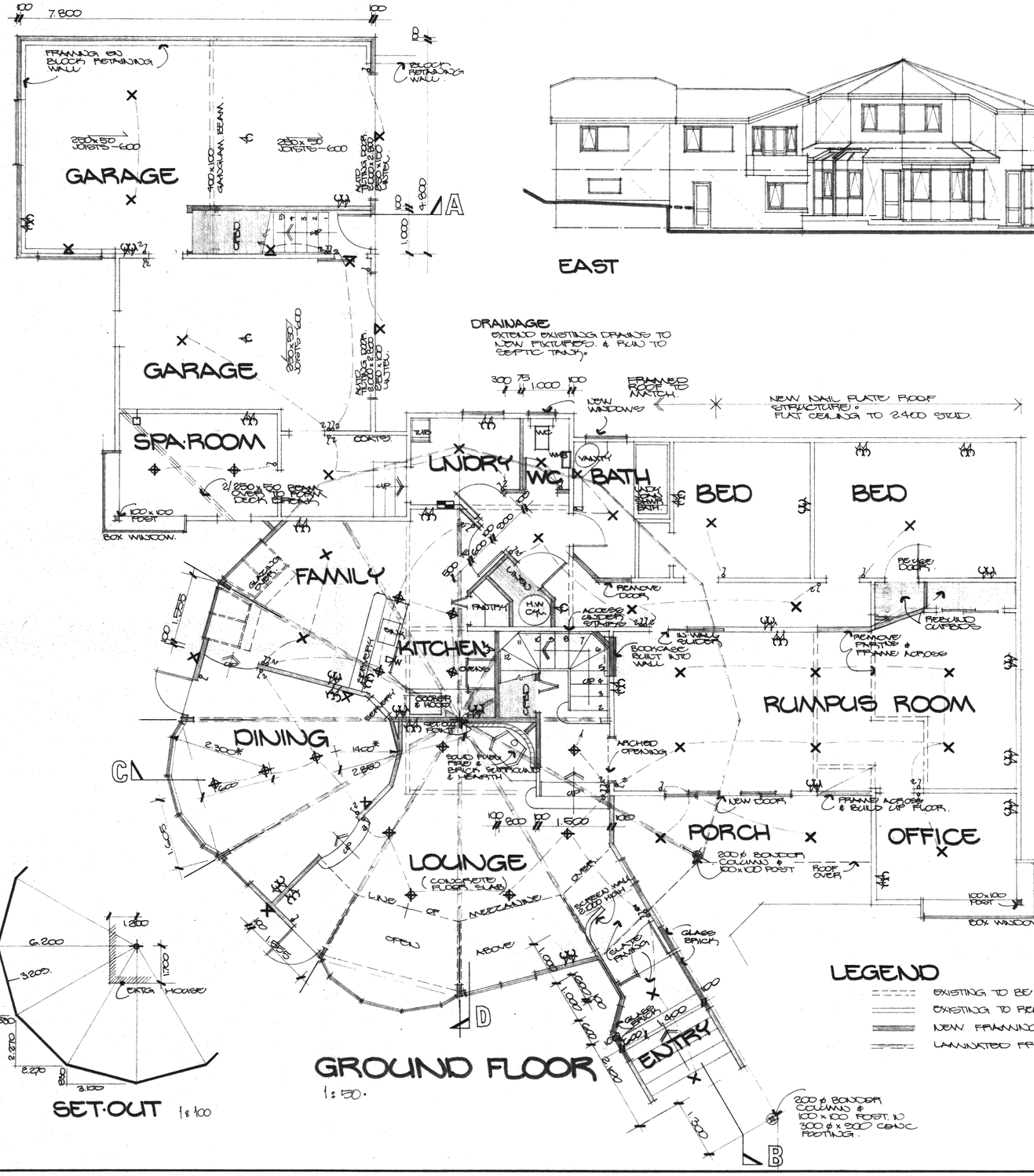

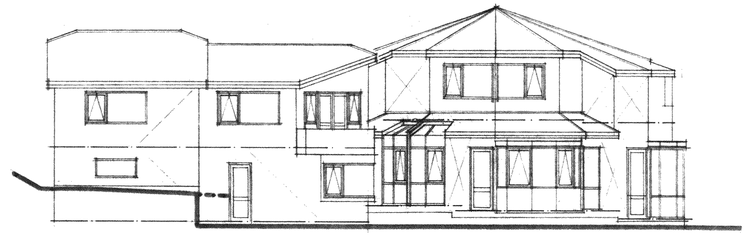

EAST

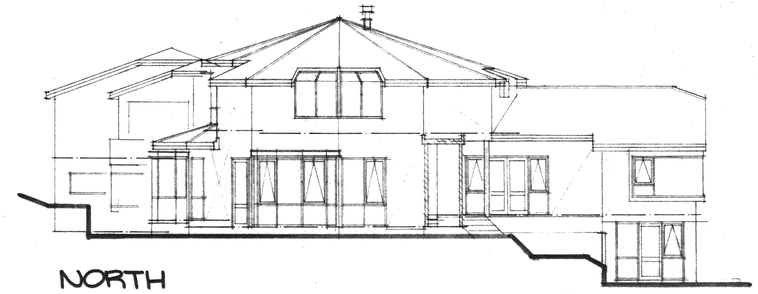

NORTH

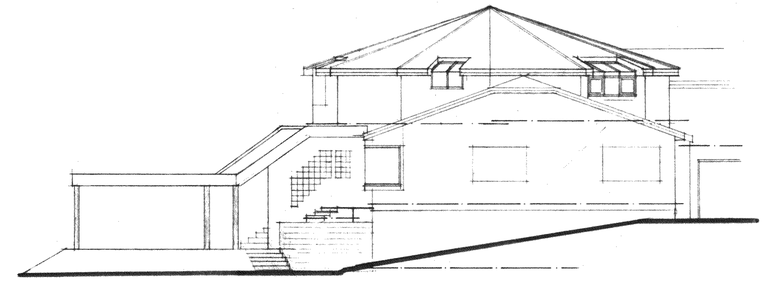

WEST

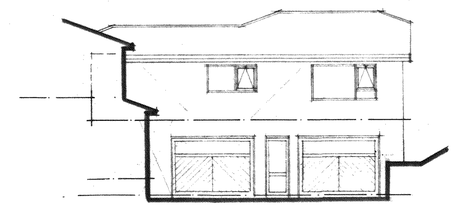

WEST

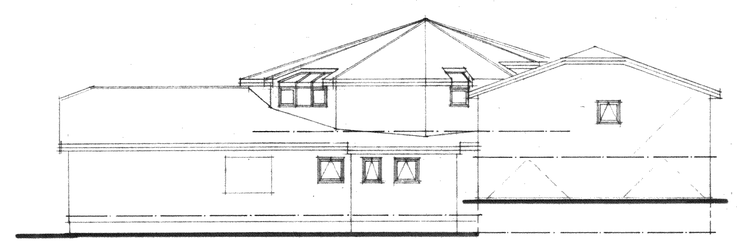

SOUTH

ELEVATIONS • 1:100.

HARVEY RESIDENCE - UPPER PLYMOUTH ROAD -

ITEM	DESCRIPTION	REQ'D	MATERIAL	REMARKS

BRIAN HILL - BUILDER, 7 THOMPSON PLACE, OAMARU • PHONE: 752 4210.

SCALE	PASSED	DATE
SHOWN.		JAN 93.

IAN HAWKEN DESIGN 220A DEVON STREET EAST. NEW PLYMOUTH. PHONE 758-7732: BOX 3117.

DRAWN: IAN HAWKEN
TRACED
CHECKED

DRAWING NUMBER 2

A1 Printed by ALLIANCE

Document Set ID: 628617
Version: 1, Version Date: 08/10/2001

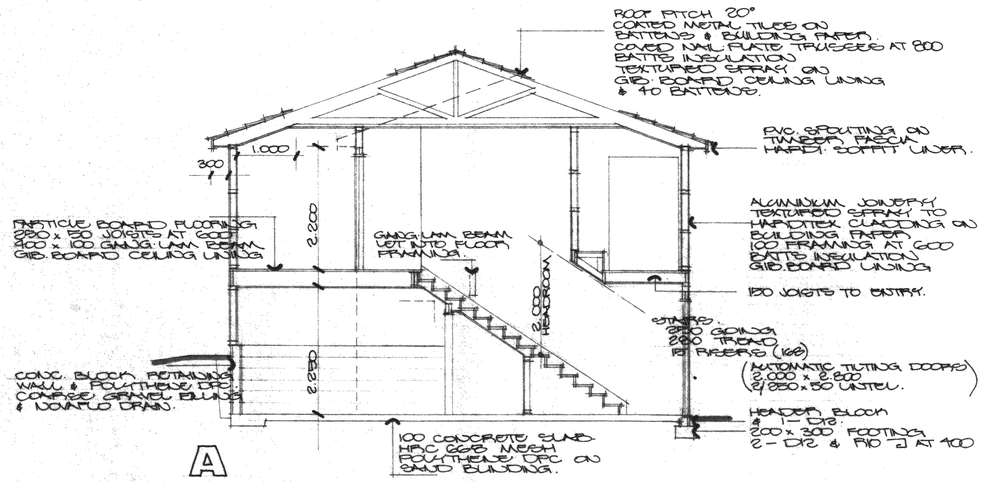

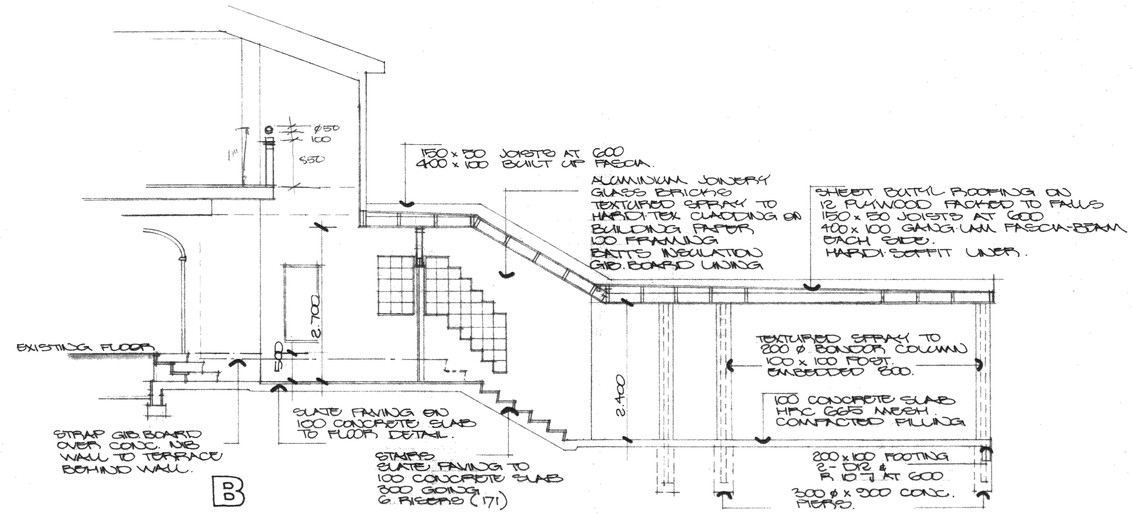

SECTIONS • 1:50.

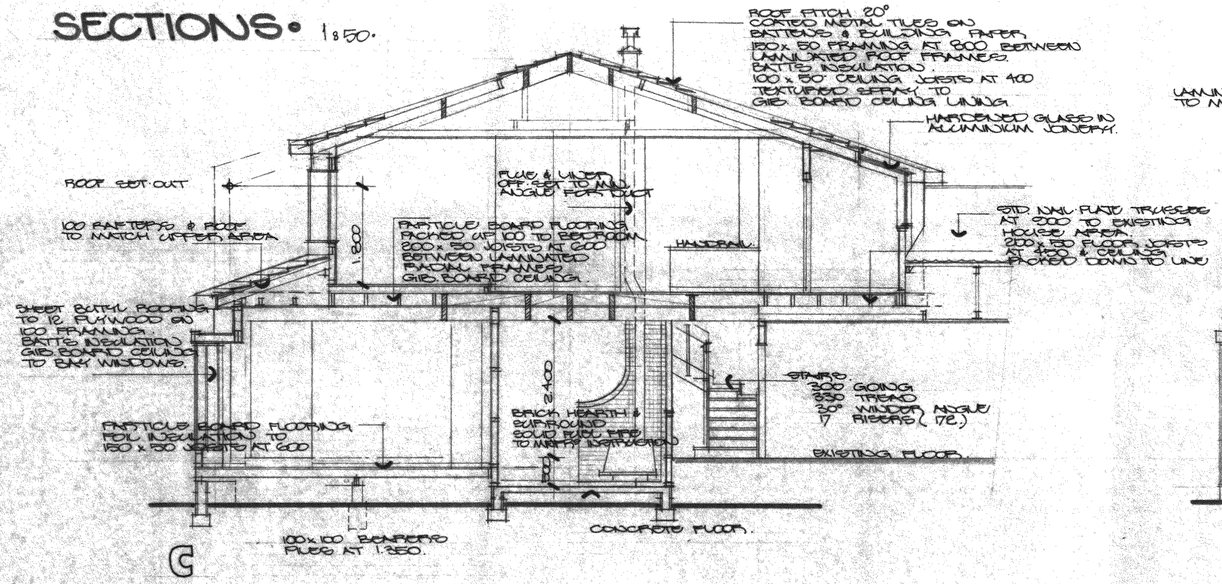

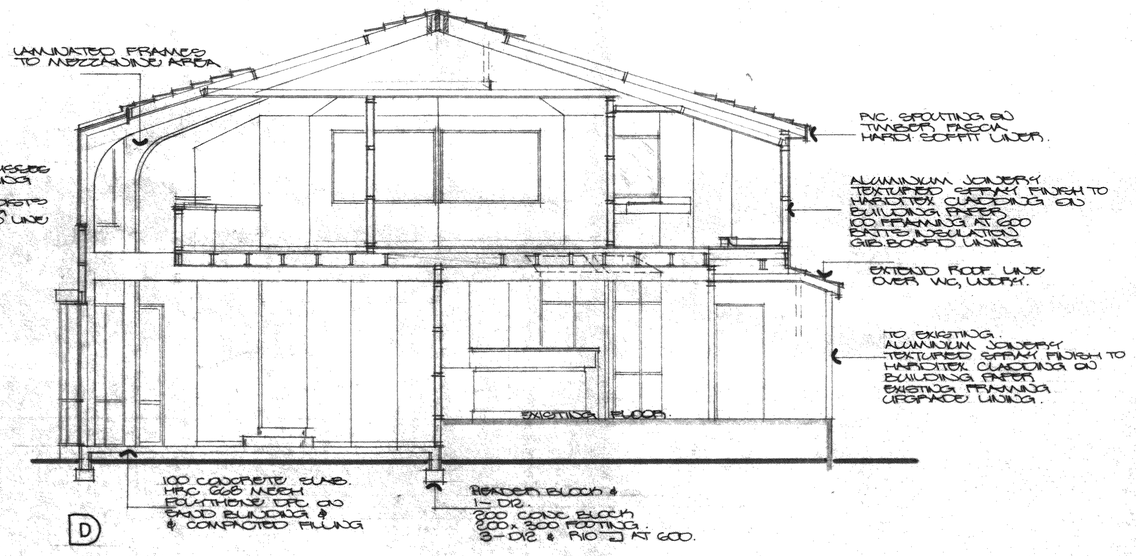

HARVEY RESIDENCE - UPPER PLYMOUTH ROAD -

ITEM	DESCRIPTION	REQ'D	MATERIAL	REMARKS

BRIAN HILL • BUILDER.
7 HIGHFORD PLACE,
ONAKO • PHONE 752 4210.

SCALE	PASSED	DATE
SHOWN.		JAN '93

IAN HAWKEN DESIGN
204 GOLD STREET EAST.
NEW PLYMOUTH.
PHONE 758-7102 : BOX 317.

DRAWN	IAN HAWKEN	3
TRACED		
CHECKED		

DRAWING NUMBER

A1 Printed by ALLIANCE

Document Set ID: 428617
Version: 1, Version Date: 06/12/2001

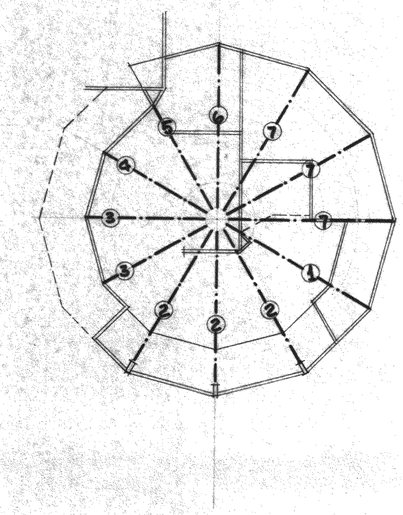

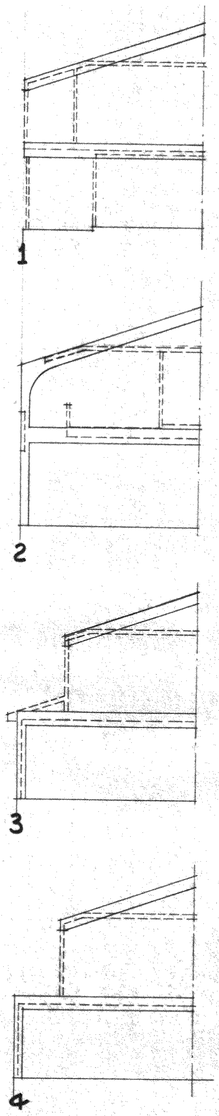

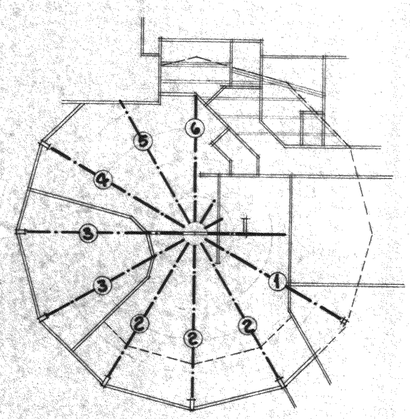

STRUCTURAL SET-OUT

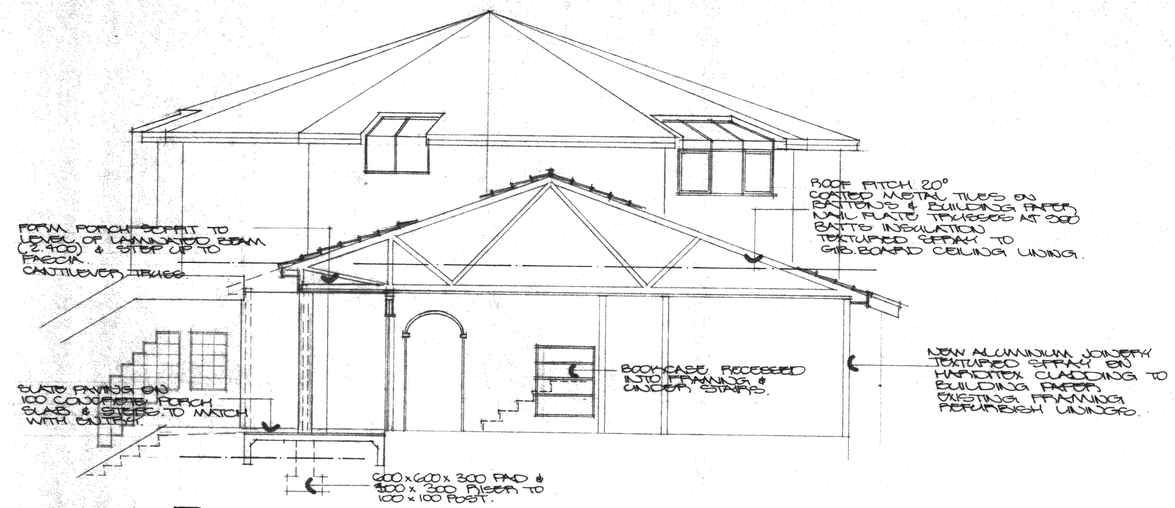

SECTN. E 1:50.

HARVEY RESIDENCE - UPPER PLYMOUTH ROAD -

ITEM	DESCRIPTION	REQ'D	MATERIAL	REMARKS

BRIAN HILL - BUILDER
7 HIGHFORD PLACE
ONAKO - PHONE 758 4810.

SCALE	PASSED	DATE
SHOWN		JULY 93.

IAN HAWKEN DESIGN
230A DEVON STREET EAST.
NEW PLYMOUTH.
PHONE 758-7106 : BOX 247.

DRAWN	IAN HAWKEN	4
TRACED		
CHECKED		

DRAWING NUMBER

A1 Printed by ALLIANCE

Document Set ID: 628807
Version: 1, Version Date: 06/10/2021

RECEIVED: 30 Jun 2008 SCANNED: 30 Jun 2008 BOX: 536 BATCH: 32706 DOC: NPDAALPI

11
ST

BUILDING CONSENT

98739P

PROPERTY ID **005877**

98739P

Document Set ID: 727982
Version: 1, Version Date: 12/01/2009

RECEIVED: 30 Jun 2008 SCANNED: 30 Jun 2008 BOX: 536 BATCH: 32706 DOC: NPDAALPI

SCALE 1:11493

Taranaki Regional XPLORER

Property Report

Assessment Number	1163113300
Address	691 PLYMOUTH ROAD OMATA
Legal Description	
Area (ha)	58.7373
Capital Value	$1,100,000.00
Land Value	$1,000,000.00
NPDC District Rates this year	$3,206.50
NPDC District Rates last year	$2812
TRC Regional Rates this year	$379.85
TRC Regional Rates last year	$363.52
Total Rates this year	$3,586.35
Total Rates last year	$3175.52

Taranaki Regional Xplorer accepts no responsibility for incomplete or inaccurate information contained on this map. Use of this website is subject to, and constitutes acceptance of the conditions set out in this disclaimer.

This publication is copyright reserved by Taranaki Regional Xplorer. Cadastral and Topographic information derived from Land Information New Zealand, CROWN COPYRIGHT RESERVED. Aerial photography was flown 2000/2001.

NPDC Approved
21 DEC 2007

PLACEMAKERS STRATFORD
88 JULIET STREET
STRATFORD
PH: 06 765 7152
FAX: 06 765 6292

CW CHRISTIE - CF SCHUIKR
691 PLYMOUTH ROAD
OMATA.

Document Set ID: 727982
Version: 1, Version Date: 12/01/2009

RECEIVED: 30 Jun 2008 SCANNED: 30 Jun 2008 BOX: 536 BATCH: 32706 DOC: NPDAALPI

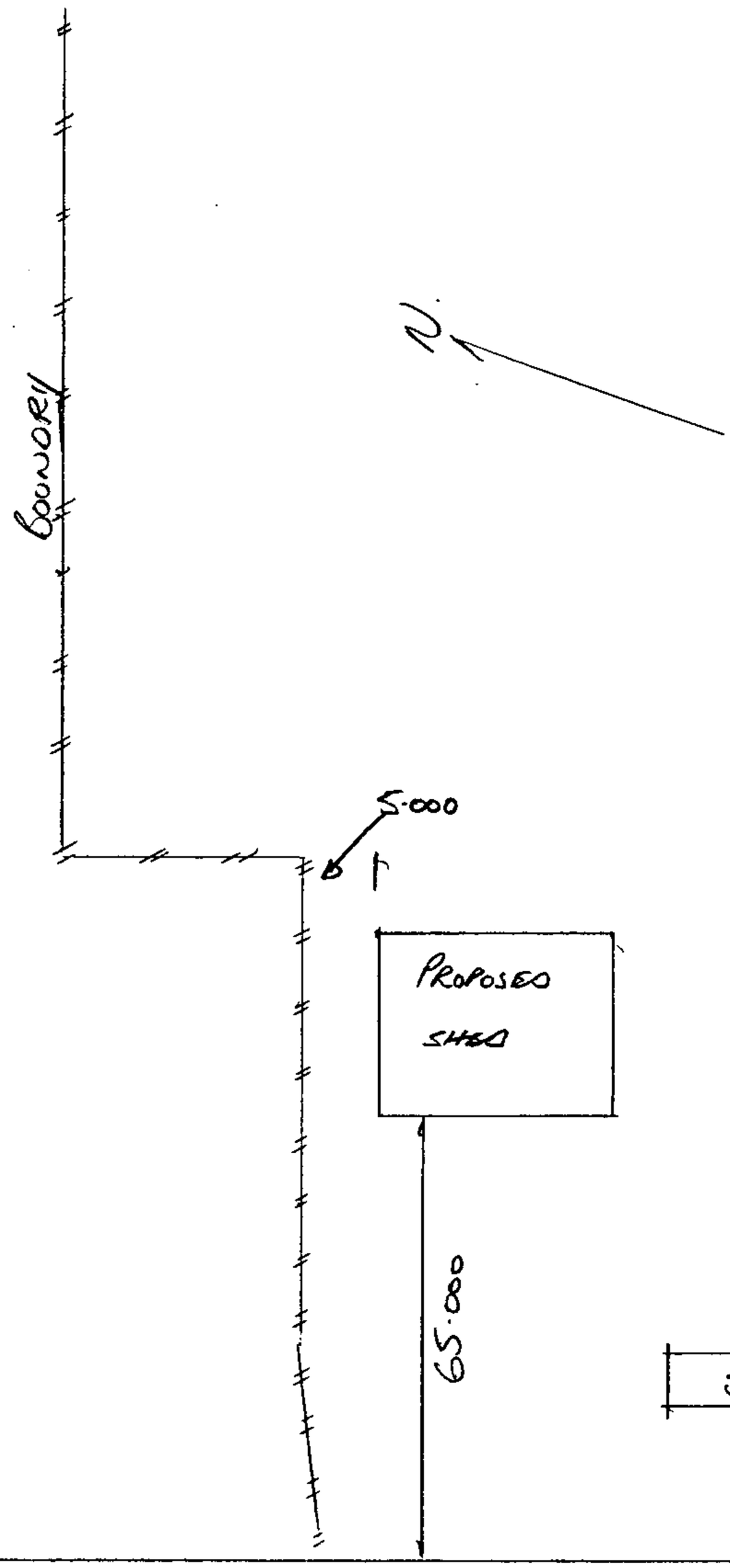

SITE PLAN NTS

NPDC Approved
21 DEC 2007

691 PLYMOUTH ROAD

PLACEMAKERS STRATFORD
88 JULIET STREET
STRATFORD
PH: 06 765 7152
FAX: 06 765 6292

FOR COLIN CHRISTIE
691 PLYMOUTH ROAD
N.P. TM 20-11-07

Document Set ID: 727982
Version: 1, Version Date: 12/01/2009

RECEIVED: 30 Jun 2008 SCANNED: 30 Jun 2008 BOX: 536 BATCH: 32706 DOC: NPDAALPI

MiTek New Zealand Ltd.

AUCKLAND
PO Box 58-014, Greenmount
Phone: (09) 274 7109
Fax: (09) 274 7100

CHRISTCHURCH
PO Box 8387, Riccarton
Phone: (03) 348 8691
Fax: (03) 348 0314

www.miteknz.co.nz

HOME OF **GANG-NAIL**® BUILDING SYSTEMS

DESIGN INFORMATION LEAN-TO - MSG 8 / VSG 8 Timber Grade

TIMBER & DURABILITY

- Rough sawn MSG 8 / VSG 8 Radiata Pine OR Douglas Fir.
- Poles, Outer Zone Density: High 450 kg/m^3 f_b = 52MPa, pole taper diameter = 6mm per 1.0m length.
- Moisture content can be green. Our recommendation is 20% or less at time of installation
- Treatment to NZS 3640:2003 Standard H1.1 for Pinus Radiata sawn timber, untreated Douglas fir, and H4 for poles. For rafters, purlins or girts that could be exposed to regular wetting our recommendation is to treat to H3.2 level and use hot dip galvanized fixings.
- In sea spray areas as defined in NZS 3604:1999 it is recommended to use stainless steel fixings or provide additional on site protection for fixings exposed to the presence of wind blown salts.

DESIGN LOADS

- Dead loads for Light Roof - 0.25kPa (includes weight of, purlins, associated framing and galvanized iron roof).
- Live loads - 1.0kN concentrated load, 0.25kPa uniform load.
- Wind loads - Building designed for **HIGH & VERY HIGH** wind conditions as per the attached selection chart and as defined by NZS3604:1999
- Seismic loads - Seismic Zones A, B or C.
- Snow loads - Buildings designed for up to 0.50kPa, 0.75kPa and 1.00kPa Snow load as shown on the attached selection chart
- Soil Conditions – ALL foundations to be into natural ground with a minimum bearing capacity of 300KPa.
- Refer to **MiTek New Zealand Limited** for any design modifications required for increase in snow loads or wind loads above those stated on the drawings.
- Buildings designed for class V category as NZS4203:1992 Table 2.3.1

DESIGN REFERENCES

NZS3603:1993 Amendment 4
NZS4203:1992
NZS3604:1999
ANSI TPI – 1 - 2002

BUILDING ERECTION

Proper bracing must be installed to hold the components true and plumb and in a safe condition until permanent bracing is fixed. All permanent bracing and fixings must be installed before applying any loads.

LOAD DETAILS

These drawings have been prepared using the above design loads.
It is the responsibility of the user to ensure that the design data and loads are still correct at the time of construction.

PRODUCT SPECIFICATION

These details have been designed using specific GANG-NAIL®, LUMBERLOK® and BOWMAC® products and the performance of the building and validity of the Producer Statement is reliant on the correct choice of product.

NPDC Approved
21 DEC 2007

COPYRIGHT

These drawings are the property of MiTek New Zealand Limited and must not copied or reproduced without permission

Document Set ID: 727982
Version: 1, Version Date: 12/01/2009

RECEIVED: 30 Jun 2008 SCANNED: 30 Jun 2008 BOX: 536 BATCH: 32706 DOC: NPDAALPI

NPDC Approved
DEC 2007

* Rough sawn sizes used on Purlins, Rafters and Girts. For Planer Gauged sizes reduce Pole or bay spacing by 20%.

* Building can be clad on all or any number of sides.

Selection Chart - Rough Sawn VSG8

SED = Small End Diameter
ED = Embedment Depth

LOAD DETAILS		POLE OR BAY SPACING	PURLIN SIZE MAX. CRS 1000mm	GIRT SIZE * MAX. CRS 1100mm	RAFTER SIZE — RAFTER SPAN 3000	4500	6000	POLE SIZE① & EMBEDMENT DEPTH — MAX POLE HEIGHT 3600	4200	4800	6000
HIGH WIND LOAD Roof $C_{pe} + C_{pi} = -1.5$ Wall $C_{pe} + C_{pi} = 1.2$	SNOW LOAD $S_g = 0.75kPa$	3600	150 x 50	150 x 50	2/200 x 50	2/250 x 50	2/300x50+1P or 2/250x50+2P	150 SED 1000 ED	175 SED 1200 ED	175 SED 1500 ED	200 SED 1800 ED
		4500	200 x 50	150x50 (intermediate pole/ column required, see sheet 10.4)	2/200 x 50	2/300 x 50 or 2/250 x 50 +1P	2/300x50+1P or 2/250x50+2P	150 SED 1000 ED	175 SED 1200 ED	175 SED 1500 ED	225 SED 1800 ED
		4800	200 x 50	150x50 (intermediate pole/ column required, see sheet 10.4)	2/200 x 50	2/300 x 50 or 2/250 x 50 +1P	2/300x50+1P or 2/250x50+2P	150 SED 1000 ED	175 SED 1200 ED	200 SED 1500 ED	225 SED 1800 ED
		5400	250 x 50	150x50 (intermediate pole/ column required, see sheet 10.4)	2/200 x 50	2/300 x 50 or 2/250 x 50 +1P	2/300 x 50 (2 P included as per sheet 10.8)	175 SED 1000 ED	175 SED 1200 ED	200 SED 1500 ED	250 SED 1800 ED
		6000	250 x 50	150x50 (intermediate pole/ column required, see sheet 10.4)	2/200 x 50	2/300 x 50 or 2/250 x 50 +1P	2/300 x 50 (2 P included as per sheet 10.8)	175 SED 1000 ED	200 SED 1200 ED	225 SED 1500 ED	250 SED 1800 ED
VERY HIGH WIND LOAD/ Roof $C_{pe} + C_{pi} = -1.5$ Wall $C_{pe} + C_{pi} = 1.2$	SNOW LOAD $S_g = 1.0kPa$	3600	200 x 50	150x50 (intermediate pole/ column required, see sheet 10.4)	2/200 x 50	2/250x50+1P or 2/300x50	2/250x50+2P or 2/300x50+1P	150 SED 1200 ED	175 SED 1200 ED	200 SED 1500 ED	225 SED 1800 ED
		4500	250 x 50	150x50 (intermediate pole/ column required, see sheet 10.4)	2/200 x 50	2/250x50+1P or 2/300x50	2/300 x 50 (2 P included as per sheet 10.8)	175 SED 1200 ED	200 SED 1200 ED	225 SED 1500 ED	250 SED 1800 ED
		4800	250 x 50	150x50 (intermediate pole/ column required, see sheet 10.4)	2/250 x 50	2/250 x 50 (1 P included as per sheet 10.8)	2/300 x 50 (2 P included as per sheet 10.8)	175 SED 1200 ED	200 SED 1200 ED	225 SED 1500 ED	250 SED 1800 ED
		5400	250 x 50	150x50 (intermediate pole/ column required, see sheet 10.4)	2/250 x 50	2/250x50+1P or 2/300x50	2/300 x 50 (2 P included as per sheet 10.8)	175 SED 1200 ED	225 SED 1200 ED	225 SED 1500 ED	275 SED 1800 ED
		6000	300 x 50	150x50 (intermediate pole/ column required, see sheet 10.4)	2/250 x 50	2/250x50+2P or 2/300x50+1P	2/300 x 50 (2 P included as per sheet 10.8)	200 SED 1200 ED	225 SED 1200 ED	250 SED 1500 ED	275 SED 1800 ED

① Pole outer zone density - High

B	VSG Grades Added

Aplri 2007

Document Set ID: 727982
Version: 1, Version Date: 12/01/2009

RECEIVED: 30 Jun 2008 SCANNED: 30 Jun 2008 BOX: 536 BATCH: 32706 DOC: NPDAALPI

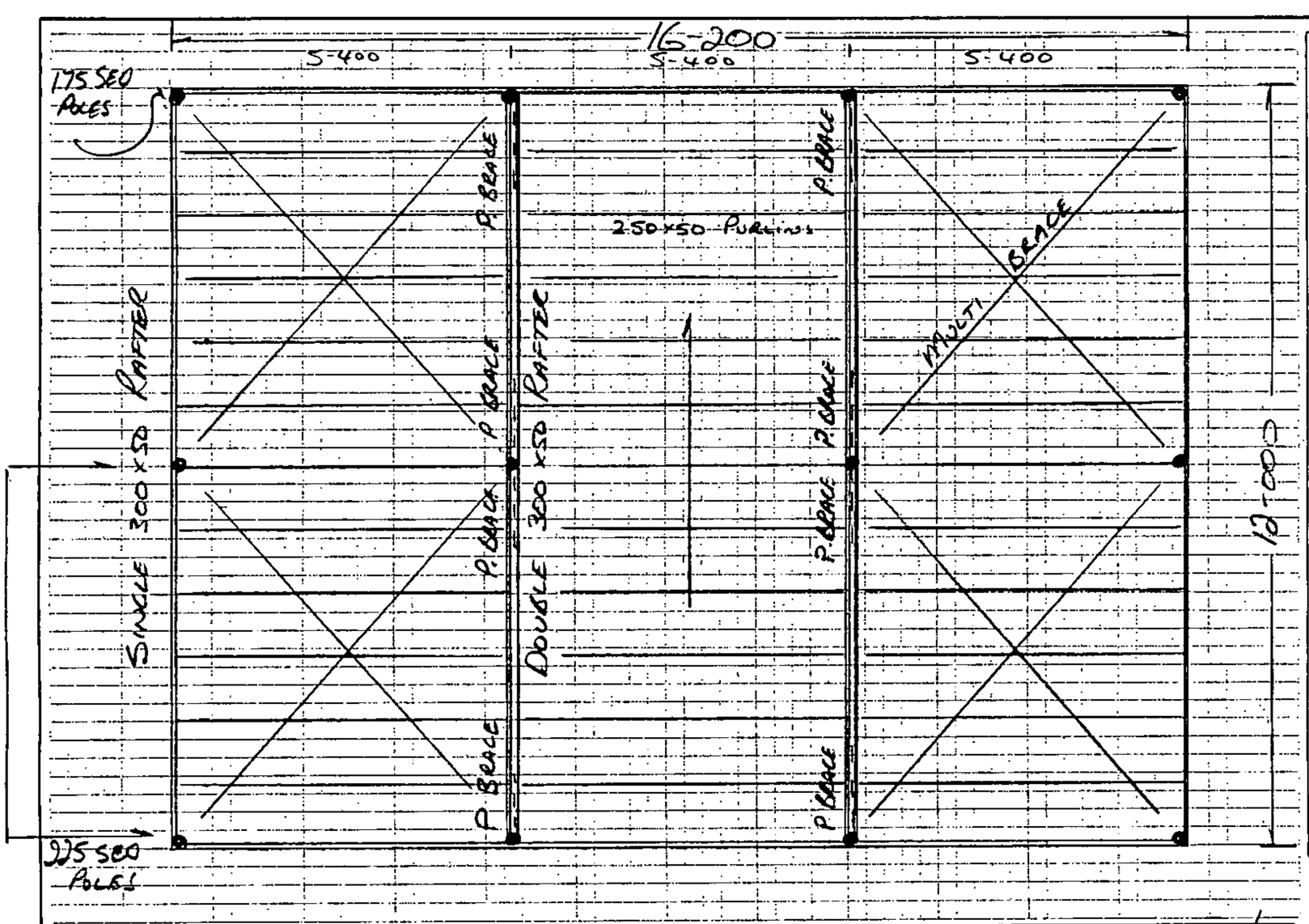

LEGEND

POLE

COLUMN

Single row of tensioned Multibrace laid over purlins. Fix at each end with 4x30x3.15 nails. and 1 at each purlin crossing. Refer below for typical bracing layouts.

2 BAYS
3 BAYS
4 BAYS
5 BAYS
6 BAYS
7 BAYS
8 BAYS
9 BAYS
10 BAYS
11 BAYS
12 BAYS

Note:
Bracing layout on centre pole buildings as follows (typical).

NPDG Approved 21 DEC 2007

JOB DETAILS:

Wind Load:	VERY HIGH	Rafter Size:	300x50	Max. Pole Height:	3-6/4-2
Snow Load:	1.0 KPA.	Purlin Size:	250x50	Girt Size:	150x50
Rafter Span:	6000	Pole Size:	175 / 225		
Pole/Bay Spacing:	5-400	Pole Embedment Depth:	1200		

SCALE

=

NOTE
This Farm Building Plan Has Been selected from the MiTek Selection Chart In the CH9000 Series.

Detailed By: TM
Date: 22-11-07

A	PLAN REVISED	AJW	4/2002

MiTek New Zealand Ltd.
AUCKLAND PO Box 68-014, Greenmount Phone: (09) 274 7108 Fax: (09) 274 7100
CHRISTCHURCH PO Box 8387, Riccarton Phone: (03) 348 8881 Fax: (03) 348 0514
www.mitekinz.co.nz
HOME OF GANG-NAIL® BUILDING SYSTEMS

© Copyright 2002 MiTek Holdings, Inc. All rights reserved.

Job Title: DESIGNER SERIES
RAFTER LEAN-TO FARM BUILDINGS

Job Name: CM CHRISTIE — CF SCHURR
Job Location: 691 PLYMOUTH ROAD OMATA

Sheet Title: LAYOUT

Drawing Number: CH9000

Date	8/2001	Designed	SAC	Checked	SAC	Sheet
Scale	NTS	Drawn	AJW	Certified	SAC	10.3.1

Document Set ID: 727982
Version: 1, Version Date: 12/01/2009

RECEIVED: 30 Jun 2008 SCANNED: 30 Jun 2008 BOX: 536 BATCH: 32706 DOC: NPDAALPI

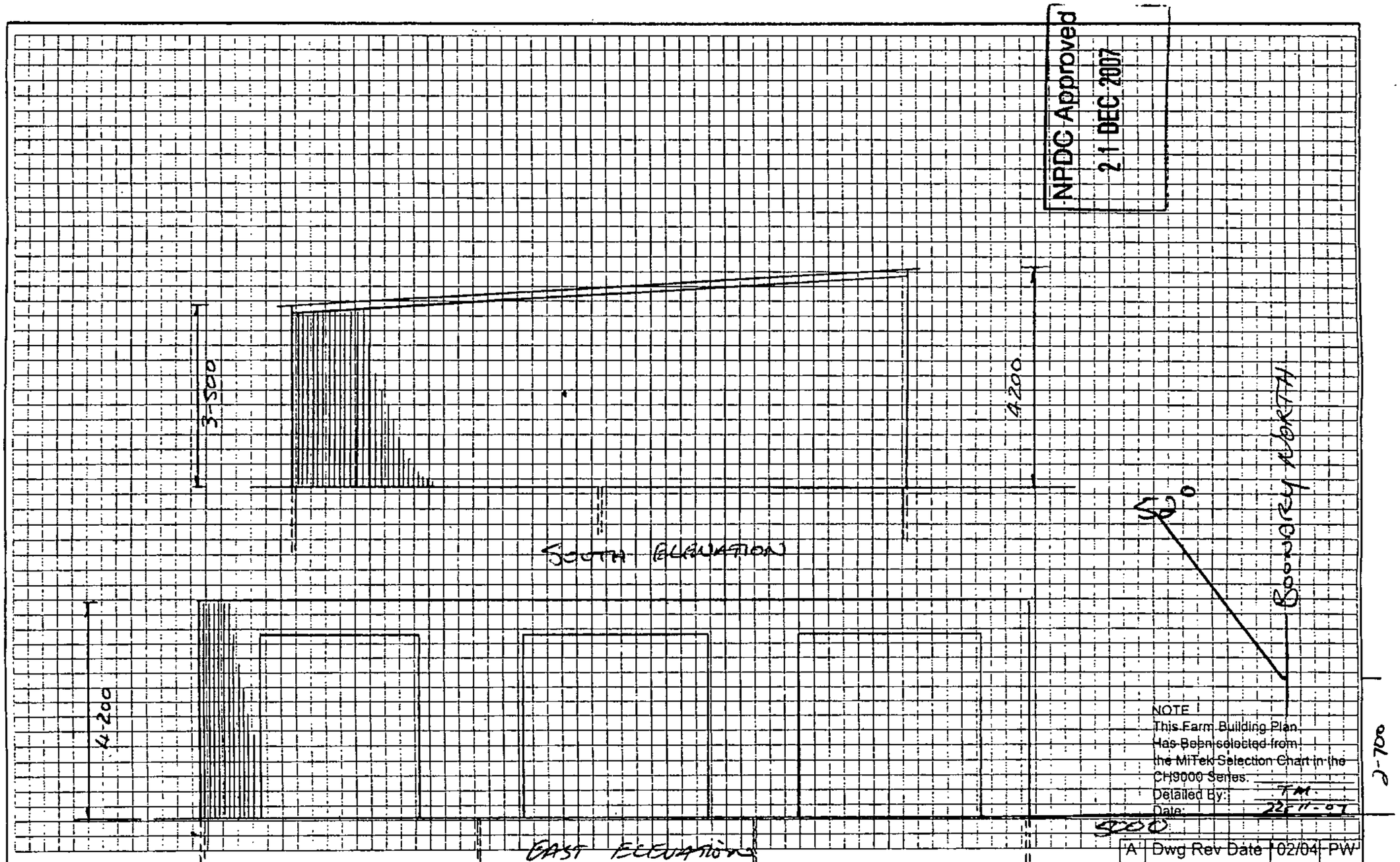

NPDC Approved
21 DEC 2007

MiTek New Zealand Ltd.

AUCKLAND
PO Box 58-014, Greenmount
Phone: (09) 274 7108
Fax: (09) 274 7100

CHRISTCHURCH
PO Box 8867, Riccarton
Phone: (03) 348 8881
Fax: (03) 348 0814

www.mitek.co.nz

HOME OF GANG-NAIL® BUILDING SYSTEMS

© Copyright 2002 MiTek Holdings, Inc. All rights reserved.

Job Title: DESIGNER SERIES
RAFTER LEAN-TO FARM BUILDINGS

Job Name: CM CHRISTIE - CF SCHURR
Job Location: 691 PLYMOUTH ROAD OMATA

Sheet Title: ELEVATIONS

Drawing Number: CH9000

Date	8/2001	Designed	SAC	Checked	SAC
Scale	NTS	Drawn	AJW	Certified	SAC

Sheet: 10.3.2

Document Set ID: 727982
Version: 1, Version Date: 12/01/2009

RECEIVED: 30 Jun 2008 SCANNED: 30 Jun 2008 BOX: 536 BATCH: 32706 DOC: NPDAALPI

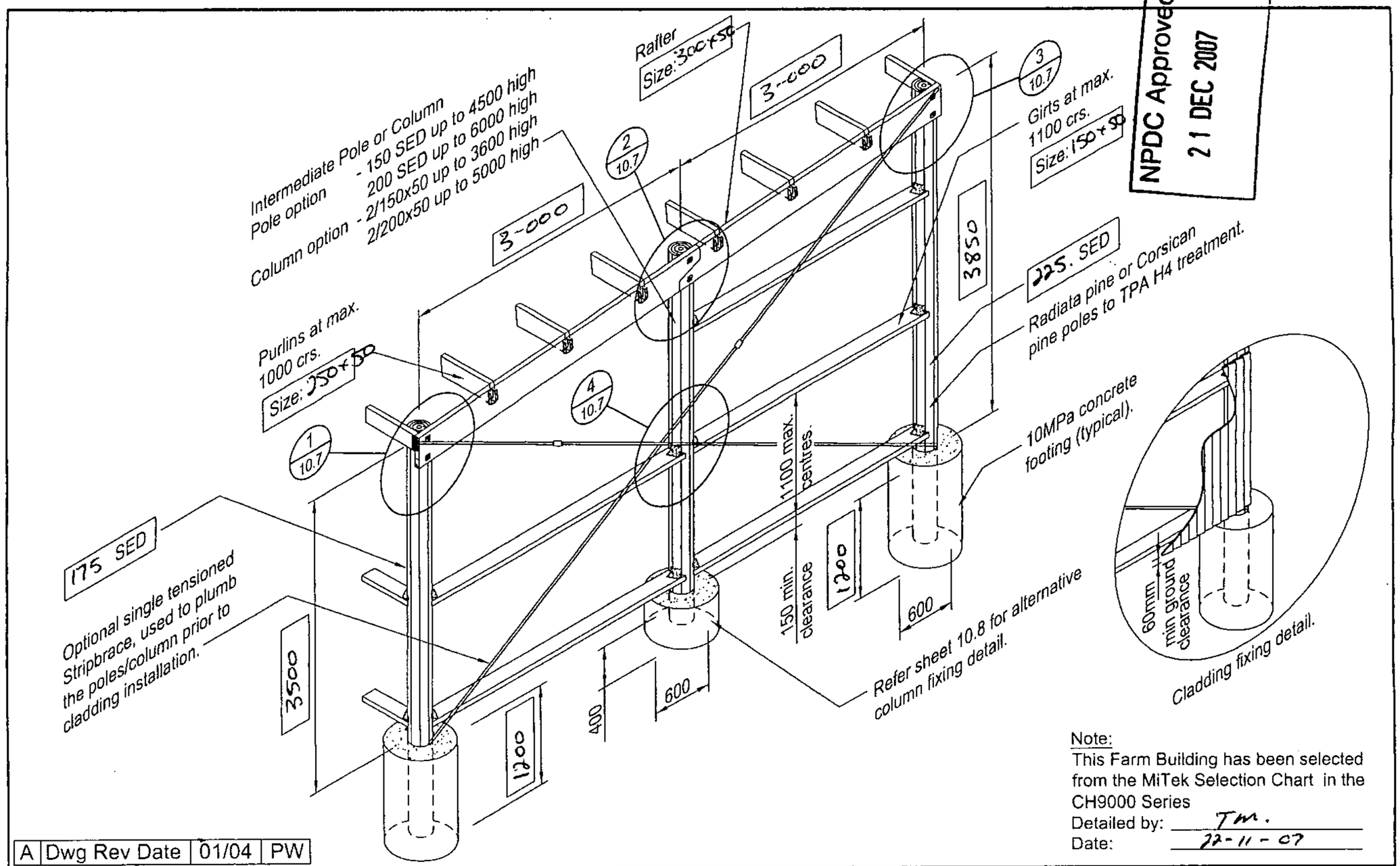

Note:
This Farm Building has been selected from the MiTek Selection Chart in the CH9000 Series
Detailed by: TM.
Date: 22-11-07

A	Dwg Rev Date	01/04	PW

MiTek New Zealand Ltd.
AUCKLAND PO Box 58-014, Greenmount Phone: (09) 274 7109 Fax: (09) 274 7100
CHRISTCHURCH PO Box 8367, Riccarton Phone: (03) 348 9861 Fax: (03) 348 0314
www.mitekinz.co.nz
HOME OF GANG-NAIL® BUILDING SYSTEMS

© Copyright 2002 MiTek Holdings, Inc. All rights reserved.

Job Title: DESIGNER SERIES
RAFTER LEAN-TO FARM BUILDINGS

Job Name: CIM CHRISTIE - C.F. SCHURR
Job Location: 691 PLYMOUTH ROAD OMATA

Sheet Title: TYPICAL END WALL ELEVATION

Drawing Number: CH9000

Date	8/2001	Designed	SAC	Checked	SAC
Scale	NTS	Drawn	AJW	Certified	SAC

Sheet: 10.4

Document Set ID: 727982
Version: 1, Version Date: 12/01/2009

RECEIVED: 30 Jun 2008 SCANNED: 30 Jun 2008 BOX: 536 BATCH: 32706 DOC: NPDAALPI

NPDC Approved
21 DEC 2007

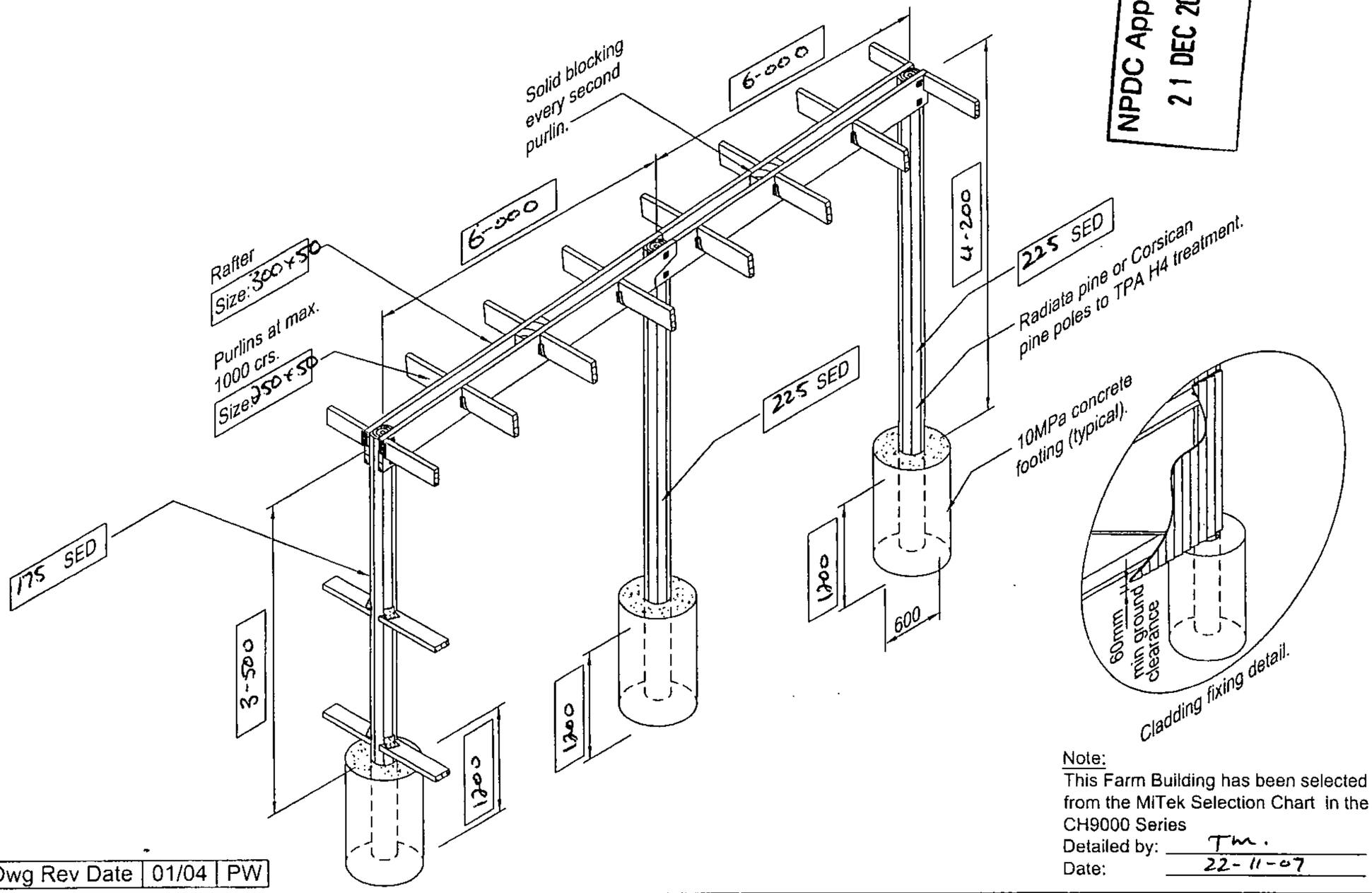

Note:
This Farm Building has been selected from the MiTek Selection Chart in the CH9000 Series
Detailed by: TM.
Date: 22-11-07

A	Dwg Rev Date	01/04	PW

MiTek New Zealand Ltd.
AUCKLAND: PO Box 58-014, Greenmount; Phone: (09) 274 7108; Fax: (09) 274 7100
CHRISTCHURCH: PO Box 8387, Riccarton; Phone: (03) 348 8881; Fax: (03) 348 0514
www.mitekni.co.nz
HOME OF GANG-NAIL® BUILDING SYSTEMS

© Copyright 2002 MiTek Holdings, Inc. All rights reserved.

Job Title: DESIGNER SERIES
RAFTER LEAN-TO FARM BUILDINGS

Job Name: CM CHRISTIE - CF SCHURR
Job Location: 691 PLYMOUTH ROAD OMATA

Sheet Title: TYPICAL SECTION WITH CENTRE POLE

Drawing Number: CH9000

Date	8/2001	Designed	SAC	Checked	SAC
Scale	NTS	Drawn	AJW	Certified	SAC

Sheet: 10.5

Document Set ID: 727982
Version: 1, Version Date: 12/01/2009

RECEIVED: 30 Jun 2008 SCANNED: 30 Jun 2008 BOX: 536 BATCH: 32706 DOC: NPDAALPI

NPDC Approved
21 DEC 2007

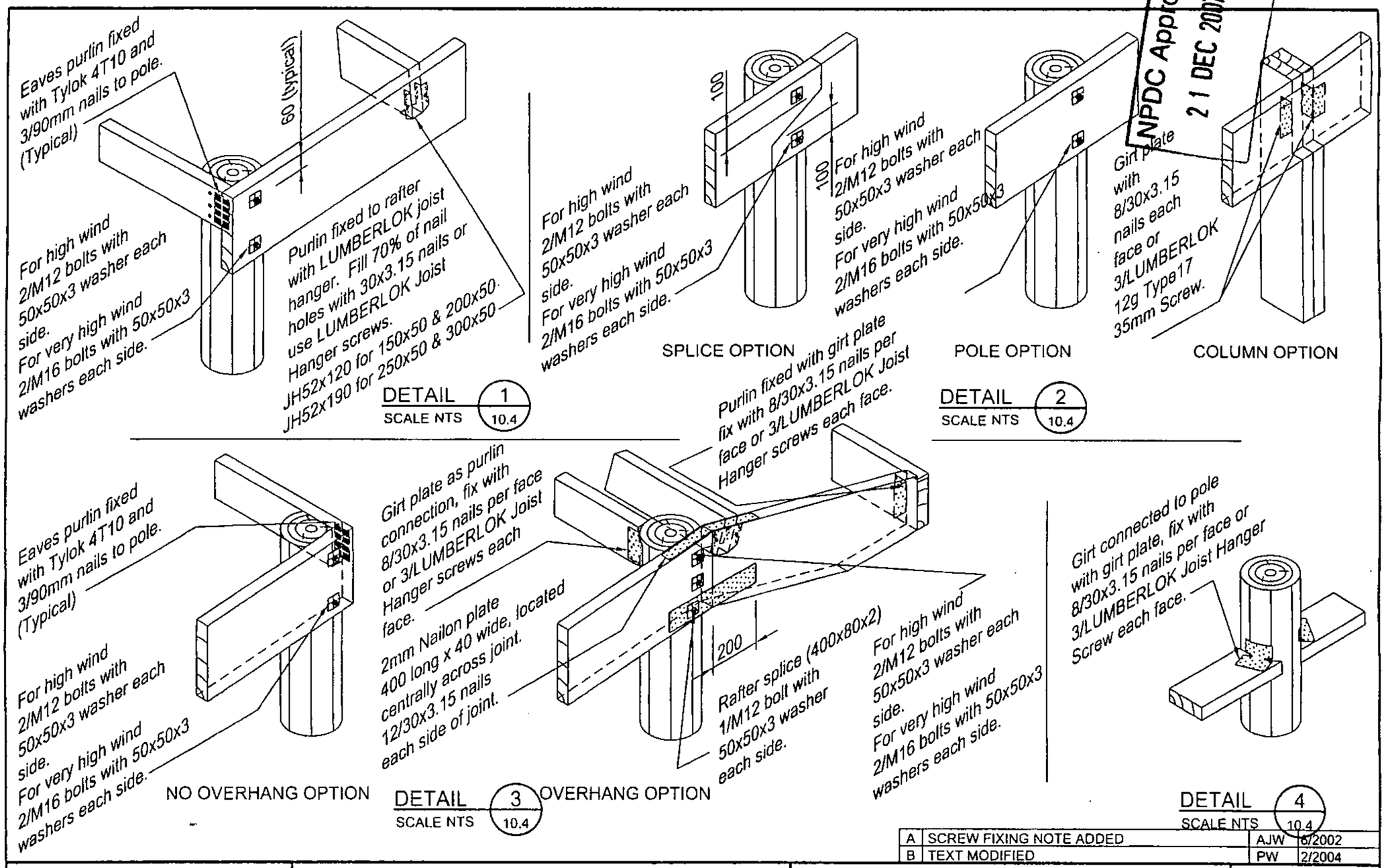

A	SCREW FIXING NOTE ADDED	AJW	6/2002
B	TEXT MODIFIED	PW	2/2004

Job Title	DESIGNER SERIES RAFTER LEAN-TO FARM BUILDINGS	Sheet Title	DETAILS SHEET 1			Drawing Number CH9000
Job Name: CM CHRISTIE - CF SCHURR Job Location: 691 PLYMOUTH ROAD OMAHA		Date 8/2001	Designed SAC	Checked SAC		Sheet 10.7 A
		Scale NTS	Drawn AJW	Certified SAC		

© Copyright 2002 MiTek Holdings, Inc. All rights reserved.

Document Set ID: 727982
Version: 1, Version Date: 12/01/2009

RECEIVED: 30 Jun 2008 SCANNED: 30 Jun 2008 BOX: 536 BATCH: 32706 DOC: NPDAALPI

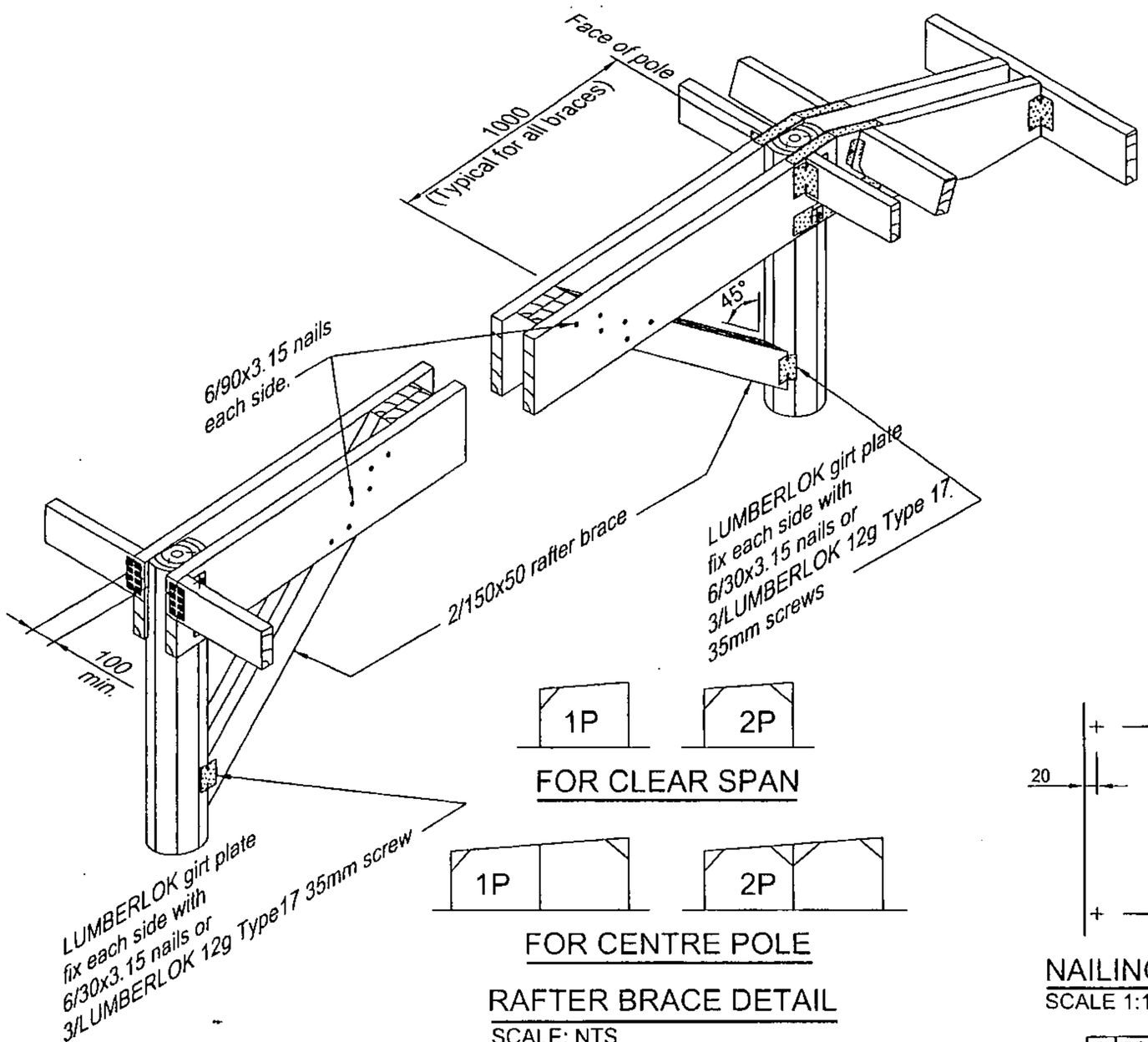

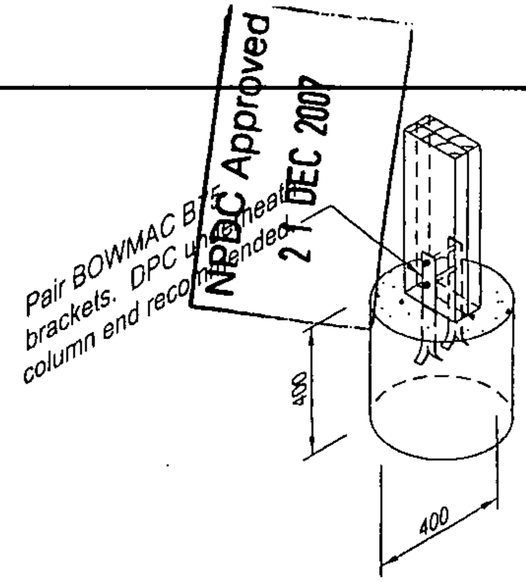

NPDC Approved
21 DEC 2007

ALTERNATIVE CENTER
COLUMN FIXING DETAIL
SCALE: NTS

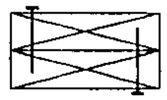

COLUMN

FOR CLEAR SPAN

FOR CENTRE POLE

RAFTER BRACE DETAIL
SCALE: NTS

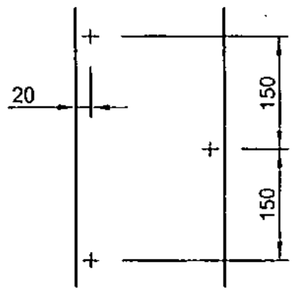

NAILING PATTERN FOR COLUMNS
SCALE 1:10

NOTE:
Fix each laminate to adjacent member with 90mm nails in 50 thick members. Nail at 150crs staggered.

A	SCREW FIXING NOTE ADDED	AJW	6/2002

MiTek New Zealand Ltd.
AUCKLAND PO Box 58-014, Greenmount Phone: (09) 274 7109 Fax: (09) 274 7100
CHRISTCHURCH PO Box 8367, Riccarton Phone: (03) 348 8081 Fax: (03) 348 0314
www.mitekinz.co.nz
HOME OF GANG-NAIL® BUILDING SYSTEMS

© Copyright 2002 MiTek Holdings, Inc. All rights reserved.

Job Title: DESIGNER SERIES
RAFTER LEAN-TO FARM BUILDINGS

Job Name: CM CHRISTIE - CF SCHURR
Job Location: 691 PLYMOUTH ROAD OMATA

Sheet Title: DETAILS SHEET 2

Drawing Number: CH9000

Date	8/2001	Designed	SAC	Checked	SAC
Scale	NTS	Drawn	AJW	Certified	SAC

Sheet: 10.8 A

Document Set ID: 727982
Version: 1, Version Date: 12/01/2009

51 AA

BUILDING CONSENT

111168P

PROPERTY ID 108966

111168P

Te Kaunihera a-Rohe o Ngāmotu
NEW PLYMOUTH DISTRICT COUNCIL
newplymouthnz.com

Application for Building Consent Amendment

Building Act 2004

AMENDMENT

0 161112

RECEIVED
11:55 am
14 NOV 2012

Examples of variations to building consents that are considered minor include:

- Substituting one internal lining for a similar internal lining.
- Substituting the type of timber treatment.
- Minor wall bracing changes.
- A change to a component (eg, fixing bracket).
- A construction change (eg, the framing method around a window when the window is changed to a door).
- Changing a room's layout (eg, the position of fixtures in a bathroom or kitchen).
- Changing one brand of insulation for another.
- Building work described in Schedule 1 of the Building Act 2004.

1. Project reference

1a. Building consent number: BC/111168

1b. Site address: 713 Plymouth Rd, New Plymouth

1c. Reason for amendment:
- ◯ Change by owner
- ◯ Other, please specify
- ✓ Information request by Council

Office use only (acceptance)	
Date received	14/11/12
Received by	Siddhan
File reference	RG-02-10-03
Property ID	108966
BC granted/issued	Yes / No
Amendment number	
AMN12-1 00928	

2. Changes covered by this application

2a. Schedule of changes. Two sets of plans must be supplied. Clearly identify all changes to plans and documents with a revision cloud. Include a revision reference on the plan that relates to the changes as provided below.

Old plan number (affected by change)	New plan number	Description of change
	PD1	Details of Schist stonework
		For additional information, please turn over

2b. Building warrant of fitness (Commercial only)

Are there any amendments to systems for which a compliance schedule has been/will be issued?

◯ Yes ✓ No

3. Applicant's declaration

This amendment to the abovementioned building consent is made by me, as
- ◯ the owner of the property
- ✓ the applicant, authorised by the owner to make this amendment

Name (print clearly)	Signature	Date
Architects Ian Pritchard		14/11/12

Phone	Mobile	Fax	Email
06-757 3620	021-757 362		i.pritchard@architects.net.nz

Office use only (Processing)

Team	Approved	Refused	Comments
Planning			
Development Engineer			
Environmental Health			
Building	✓	16/11/12	
Engineer (specialist)			

Liardet Street, Private Bag 2025, New Plymouth 4340, NZ. Telephone 06-759 6060, Fax 06-759 6072, Email enquiries@npdc.govt.nz, Website www.newplymouthnz.com

© New Plymouth District Council 2011

IAN PRITCHARD - Architects
P.O. Box 112
New Plymouth

AMEN

0 161112

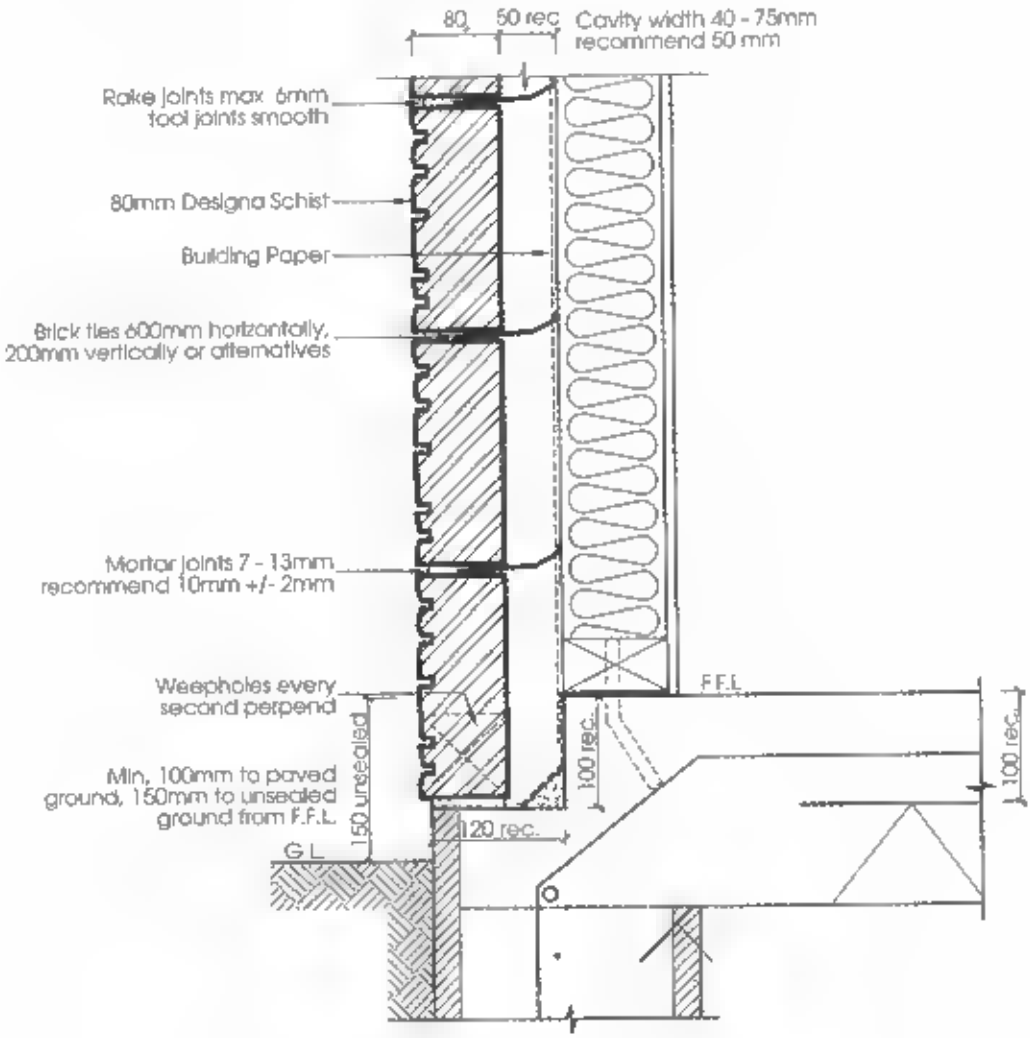

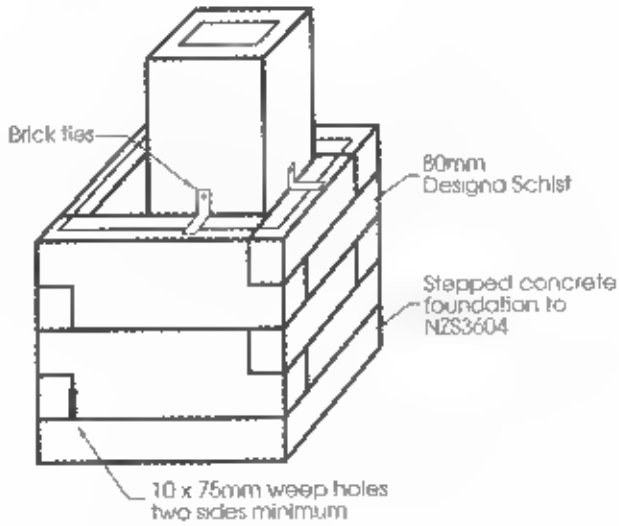

PERRETT PROPERTIES FARMHOUSE
713 PLYMOUTH ROAD, NEW PLYMOUTH. P.D. 1.

Te Kaunihera-ā-Rohe o Ngāmotu
NEW PLYMOUTH DISTRICT COUNCIL
newplymouthnz.com

Application for Building Consent Amendment

Building Act 2004

AMENDMENT

02 060612

Examples of variations to building consents that are considered minor include:

- Substituting one internal lining for a similar internal lining.
- Substituting the type of timber treatment.
- Minor wall bracing changes.
- A change to a component (eg, fixing bracket).
- A construction change (eg, the framing method around a window when the window is changed to a door).
- Changing a room's layout (eg, the position of fixtures in a bathroom or kitchen).
- Changing one brand of insulation for another.
- Building work described in Schedule 1 of the Building Act 2004.

1. Project reference

1a. Building consent number: BC11/111168

1b. Site address: 699 Plymouth Road, Omata

1c. Reason for amendment:
- ◯ Change by owner
- ◯ Other, please specify
- ◯ Information request by Council

Office use only (acceptance)	
Date received	6-6-12
Received by	
File reference	RG-02-10-03
Property ID	
BC granted/issued	Yes / No
Amendment number	
AMN12100455	

2. Changes covered by this application

2a. Schedule of changes. Two sets of plans must be supplied. Clearly identify all changes to plans and documents with a revision cloud. Include a revision reference on the plan that relates to the changes as provided below.

Old plan number (affected by change)	New plan number	Description of change
S0.00 (0)	S0.00 (1)	Cover Sheet and Drawing Register
S1.01 (0)	S1.01 (1)	Location Plan
S2.01 (0)	S2.01 (1)	Frame Elevations
		Frame dimensions changed
		Calculations
		For additional information, please turn over

2b. Building warrant of fitness (Commercial only)

Are there any amendments to systems for which a compliance schedule has been/will be issued?

◯ Yes ◯ No

3. Applicant's declaration

This amendment to the abovementioned building consent is made by me, as
- ◯ the owner of the property
- ✓ the applicant, authorised by the owner to make this amendment

Name (print clearly)	Signature	Date
Tse Taranaki & Associates Ltd — Deane Whitmore		06/06/12 / /

Phone	Mobile	Fax	Email
06 7588390			tse@tsetaranaki.co.nz

Office use only (Processing)

Team	Approved	Refused	Comments
Planning			
Development Engineer			
Environmental Health			
Building	7/8/12		
Engineer (specialist)			(See further info ... 060612)

130612 0.25

060612

Liardet Street, Private Bag 2025, New Plymouth 4340, NZ. Telephone 06-759 6060, Fax 06-759 6072, Email enquiries@npdc.govt.nz, Website www.newplymouthnz.com

© New Plymouth District Council 2011

AMENDMENT

02 _ 140612

SHEET NO	FILE NO
1A	3951/5070
CALCS BY	JOB NAME
JNA	D&H WILLIAMS LOT 1 PLYMOUTH RD
DATE	
6/2012	

TSE TARANAKI & ASSOCIATES LIMITED

STRUCTURAL & CIVIL ENGINEERS
PROJECT MANAGERS

Graphic Explosion - 17322

DESCRIPTION

PORTICO FRAME TO BE INCREASED FROM 4.45 ℄ SPAN TO 4.75 ℄ SPAN. CHECK IF EXISTING DESIGN OKAY.

LOADS: REFER TO SHEETS 1–4 OF ORIGINAL SET FOR PORTAL LOADS

MICROSTRAN ANALYSIS: 150 PFC FRAME

M^*_{CRIT} = 7 kNm ; FOS = 5.3 > 1.0 ✓ ok
$\Delta(x)$ = 12 mm < 2800/150 = 19 ✓ ok

→ EXISTING 150 PFC FRAME DESIGN OKAY

MICROSTRAN ANALYSIS: 150 PFC FRAME

M^*_{CRIT} = 7.1 kNm ; FOS = 5.2 > 1.0 ✓ ok
$\Delta(x)$ = 13 mm < 2800/150 = 19 ✓ ok

→ 150 PFC FRAME UP TO 4900 SPAN OK

148 POWDERHAM STREET, P.O. BOX 237, NEW PLYMOUTH. TEL (06) 758-8390 FAX (06) 757-9404

Tse Taranaki & Associates Limited
Job: 3951 500 STEEL PORTAL FRAME 2
D & H WILLIAMS
LOT 1 , PLYMOUTH ROAD

12 Jun 2012
12:18 p.m.

Design Ratios - % of Code Capacity:
<= 50
<= 95
<= 100
<= 105
<= 110
> 110

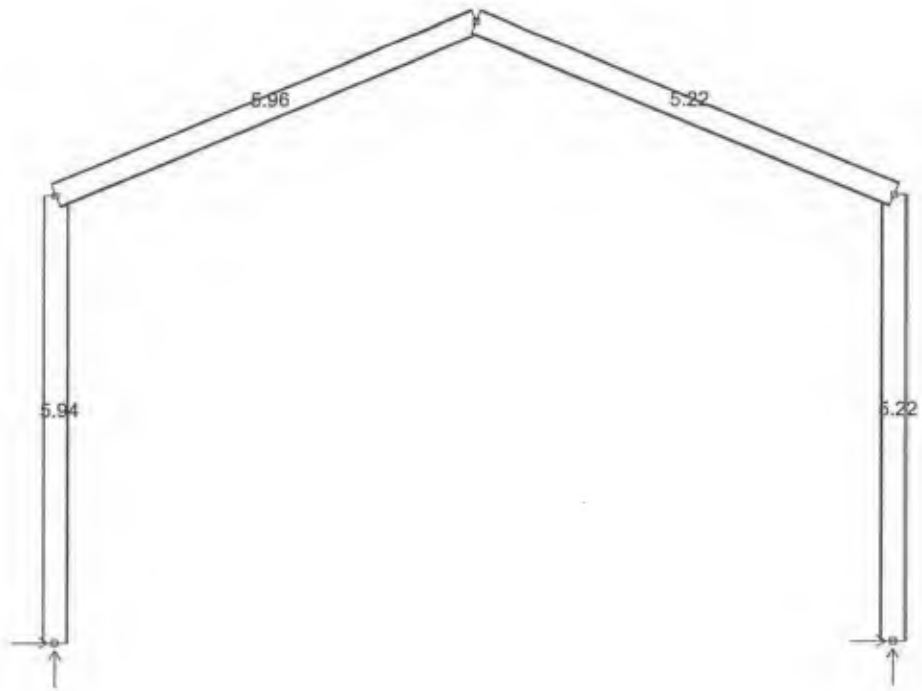

Y
Z X
theta: 270 phi: 0

150 PFC FRAME (4900 CL SPAN)

Microstran [V8.11r]E:\DWG\3951\3951-500 - DAVE WILLIAMS RESIDENCE - GREG ROPER EARTHWORKS - LOT 1 , PLYMOUTH ROAD\CALCULATIONS\MICROSTRAN\3951 500 STEEL PORTAL FRAME 2

AMENDMENT
02 _ 140612

Tse Taranaki & Associates Limited
Job: 3951 500 STEEL PORTAL FRAME 2
D & H WILLIAMS
LOT 1 , PLYMOUTH ROAD

12 Jun 2012
12:19 p.m.

Load Cases:
7 C U = 0.9WG + Wu
8 C U = 0.9WG + Wu (LATERAL)

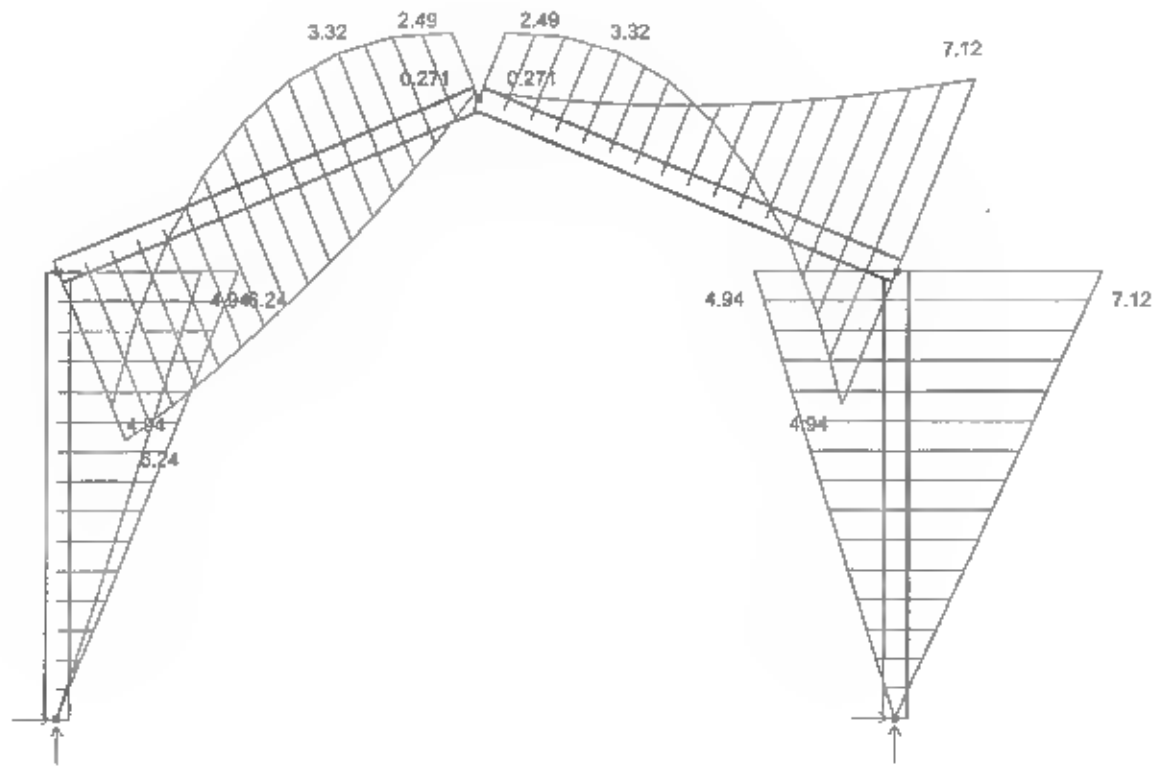

Y
Z X
theta: 270 phi: 0

150 PFC FRAME (4900 CL SPAN)

Bending Moment, Mz

Microstran [V8.11r]E:\DWG\3951\3951-500 - DAVE WILLIAMS RESIDENCE - GREG ROPER EARTHWORKS - LOT 1 , PLYMOUTH ROAD\CALCULATIONS\MICROSTRAN\3951 500 STEEL PORTAL FRAME 2

AMENDMENT
02 140612

Tse Taranaki & Associates Limited
Job: 3951 500 STEEL PORTAL FRAME 2
D & H WILLIAMS
LOT 1 , PLYMOUTH ROAD

12 Jun 2012
12:20 p.m.

Load Cases:
11 C A = 0.9WG + 0.68Wu
12 C A = 0.9WG + 0.68Wu (LATERAL)

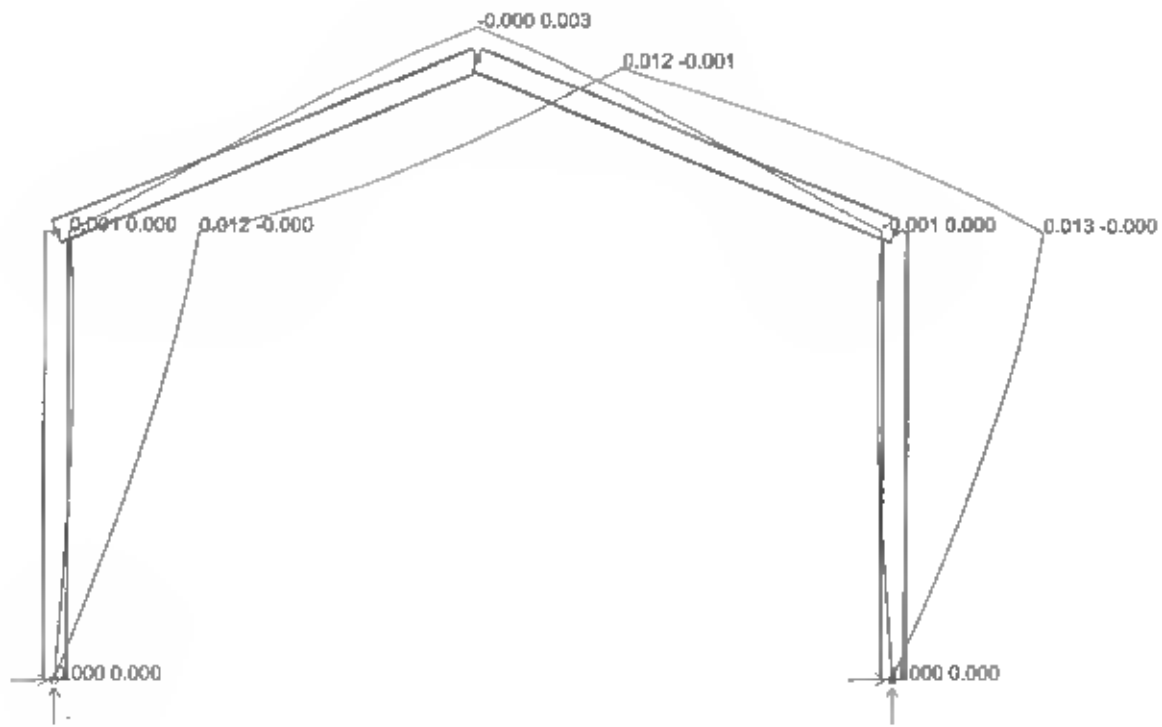

Y
Z X
theta: 270 phi: 0

150 PFC FRAME (4900 CL SPAN)

Displaced Shape

AMENDMENT
02 14 06 12

Microstran [V8.11r]E:\DWG\3951\3951-500 - DAVE WILLIAMS RESIDENCE - GREG ROPER EARTHWORKS - LOT 1 , PLYMOUTH ROAD\CALCULATIONS\MICROSTRAN\3951 500 STEEL PORTAL FRAME 2

AMENDMENT

02 _ 060612

DRAWING REGISTER

DRAWING DESCRIPTION	SHEET	2011 13.04	2012 03.06
COVER SHEET AND DRAWING REGISTER (THIS SHEET)	S0.00	0	1
CONSTRUCTION NOTES	S0.01	0	
LOCATION PLAN	S1.01	0	1
FRAME ELEVATIONS	S2.01	0	1
FOUNDATION DETAILS	S3.01	0	
STEELWORK DETAILS	S4.01	0	
ISSUED FOR CONSENT		✓	

DISTRIBUTION

OWNER		✓	
CONTRACTOR			
TERRITORIAL AUTHORITY			
CONSULTANT			

PERRETT PROPERTIES LIMITED
699 PLYMOUTH ROAD OMATA

NEW RESIDENCE
PORTAL DESIGN DETAILS

APRIL 2011
JOB No. 3951-500

CONSENT ISSUE

Tse Taranaki & Associates Limited
STRUCTURAL & CIVIL ENGINEERS
PROJECT MANAGERS
148 POWDERHAM STREET – PO BOX 237
NEW PLYMOUTH – NEW ZEALAND
TEL 64.6.7588390 – FAX 64.6.7579404
EMAIL: tse@tsetaranaki.co.nz

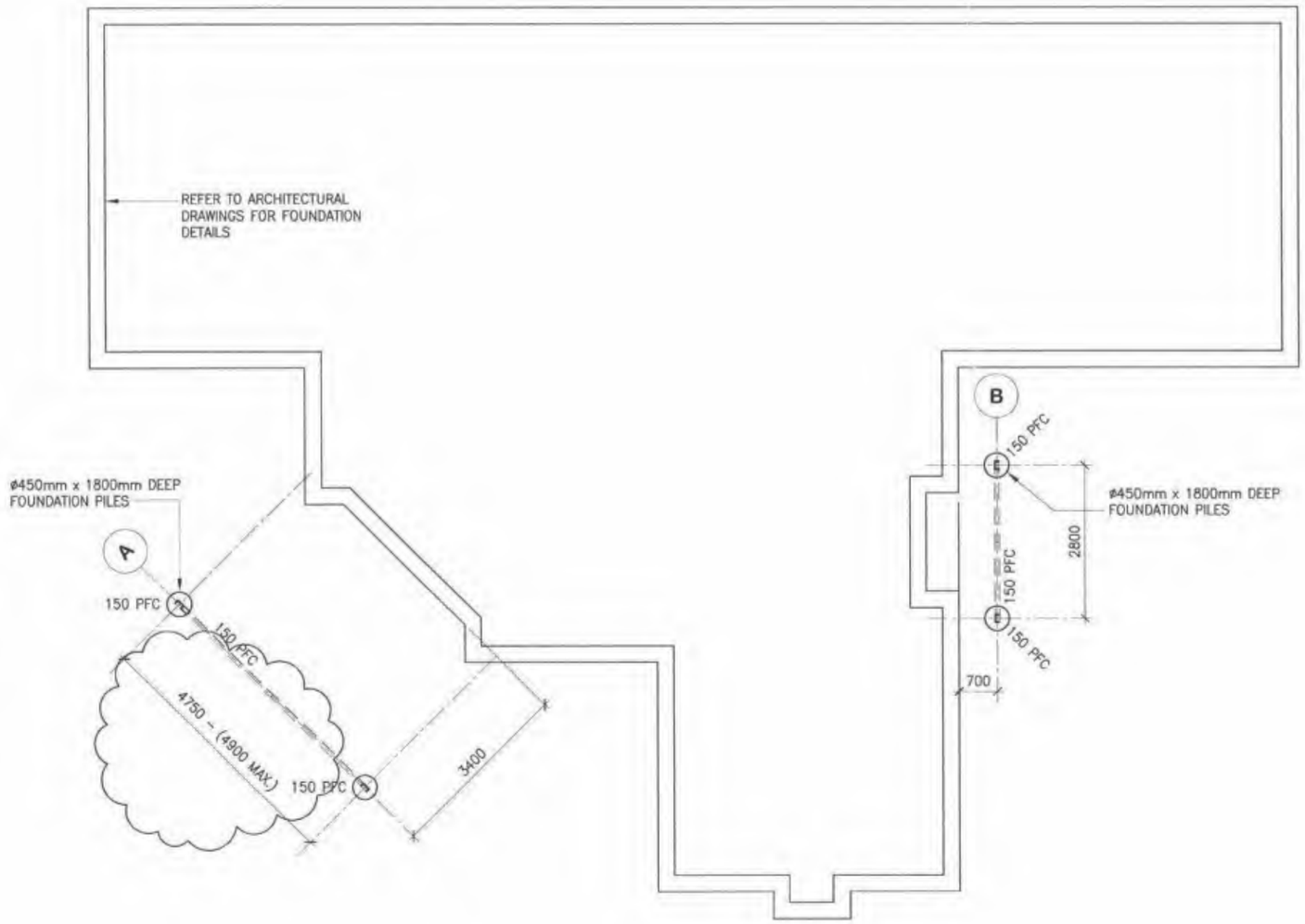

FOUNDATION PLAN

SCALE 1:100

AMENDMENT for CONSENT
3rd JUNE 2012

AMENDMENT
02 060612

ISSUE	AMENDMENT	DATE	BY
1	FRAME DIMENSION CHANGED	03.06.12	DGW
0	CONSENT ISSUE	13.04.11	DGW

COPYRIGHT:
THIS DOCUMENT AND THE COPYRIGHT IN THIS DOCUMENT REMAIN THE PROPERTY OF TSE TARANAKI & ASSOCIATES LIMITED. THE CONTENTS OF THIS DOCUMENT MAY NOT BE REPRODUCED EITHER IN WHOLE OR IN PART BY ANY MEANS WHATSOEVER WITHOUT THE PRIOR WRITTEN CONSENT OF TSE TARANAKI & ASSOCIATES LIMITED.

CONTRACTORS TO:
VERIFY ALL DIMENSIONS AND CHECK ALL LEVELS ON SITE BEFORE COMMENCING ANY WORK; REFER TO FIGURED DIMENSIONS; REFER ANY DISCREPANCIES TO THE DRAWING OFFICE; CHECK THAT ALL WORKMANSHIP AND MATERIALS CONFORM WITH THE BUILDING ACT 2004 & THE NEW ZEALAND BUILDING CODE.

Drawn	DG WHITMORE	13.04.11
Design	F. KERSLAKE	APRIL 2011
Checked		
Approved		

Tse Taranaki & Associates Limited
STRUCTURAL & CIVIL ENGINEERS
PROJECT MANAGERS
148 POWDERHAM STREET – PO BOX 237
NEW PLYMOUTH – NEW ZEALAND
TEL 64.6.7588390 – FAX 64.6.7579404
EMAIL: tse@tsetaranaki.co.nz

TITLE
PERRETT PROPERTIES LTD
699 PLYMOUTH ROAD - OMATA

NEW RESIDENCE
PORTAL DESIGN DETAILS

SHEET CONTENTS
LOCATION PLAN

A1 SCALE	
A2 SCALE	
A3 SCALE	1:100

ISSUE	SHEET No.
1	S1.01
JOB No. 3951-500	

S1.01 - LOCATION PLAN - 09:23am - 03.6.12

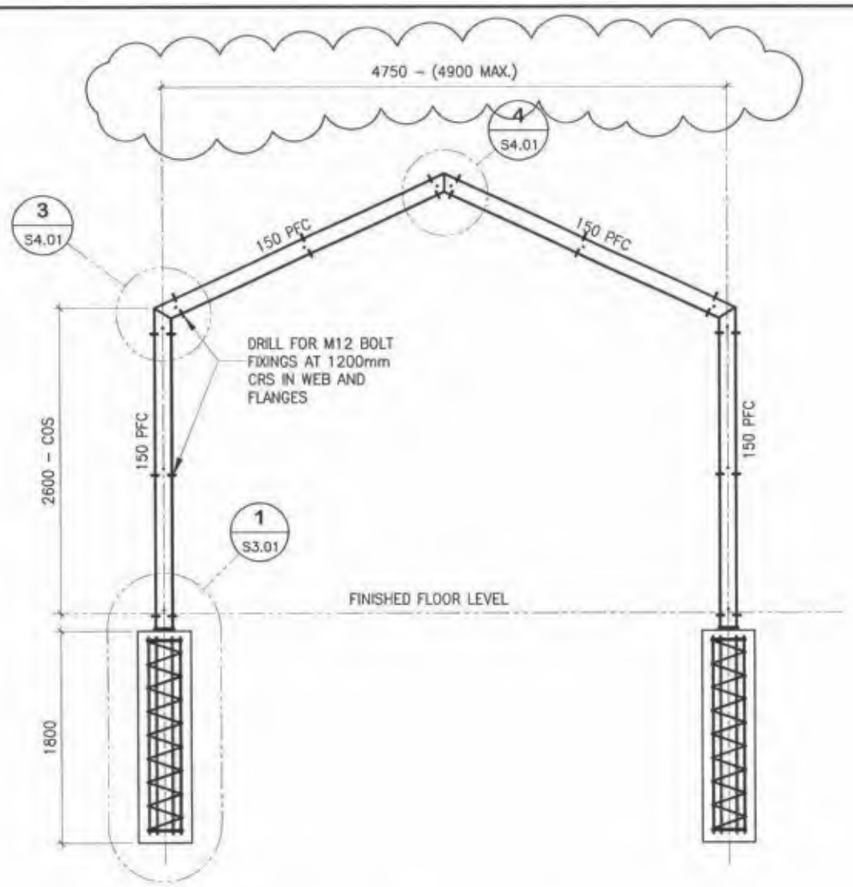

A S1.02 **FRAME ELEVATION - GRID A**

SCALE 1:50

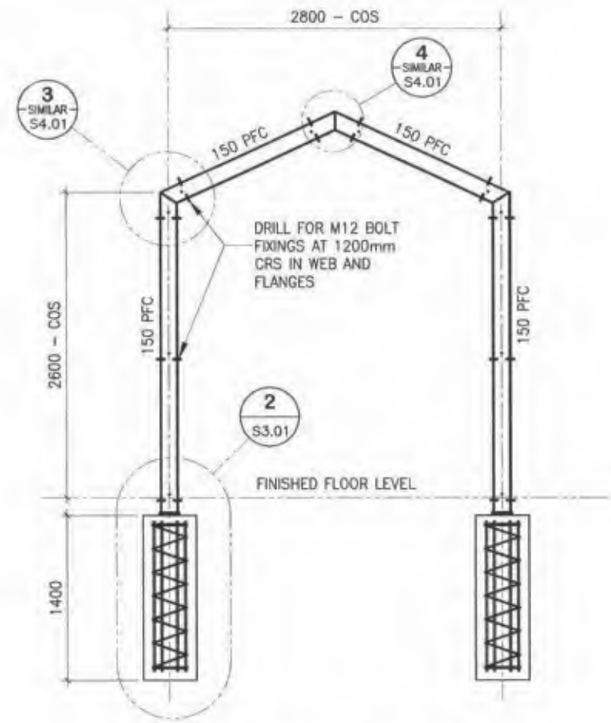

B S1.02 **FRAME ELEVATION - GRID A**

SCALE 1:50

AMENDMENT for CONSENT
3rd JUNE 2012

AMENDMENT

02 _ 060612

ISSUE	AMENDMENT	DATE	BY
1	FRAME DIMENSION CHANGED	03.06.12	DGW
0	CONSENT ISSUE	13.04.11	DGW

COPYRIGHT:
THIS DOCUMENT AND THE COPYRIGHT IN THIS DOCUMENT REMAIN THE PROPERTY OF TSE TARANAKI & ASSOCIATES LIMITED. THE CONTENTS OF THIS DOCUMENT MAY NOT BE REPRODUCED EITHER IN WHOLE OR IN PART BY ANY MEANS WHATSOEVER WITHOUT THE PRIOR WRITTEN CONSENT OF TSE TARANAKI & ASSOCIATES LIMITED.

CONTRACTORS TO:
VERIFY ALL DIMENSIONS AND CHECK ALL LEVELS ON SITE BEFORE COMMENCING ANY WORK; REFER TO FIGURED DIMENSIONS; REFER ANY DISCREPANCIES TO THE DRAWING OFFICE; CHECK THAT ALL WORKMANSHIP AND MATERIALS CONFORM WITH THE BUILDING ACT 2004 & THE NEW ZEALAND BUILDING CODE.

Drawn	DG WHITMORE	13.04.11
Design	F. KERSLAKE	APRIL 2011
Checked		
Approved		

Tse Taranaki & Associates Limited
STRUCTURAL & CIVIL ENGINEERS
PROJECT MANAGERS
148 POWDERHAM STREET – PO BOX 237
NEW PLYMOUTH – NEW ZEALAND
TEL 64.6.7588390 – FAX 64.6.7579404
EMAIL: tse@tsetaranaki.co.nz

TITLE
PERRETT PROPERTIES LTD
699 PLYMOUTH ROAD - OMATA

NEW RESIDENCE
PORTAL DESIGN DETAILS

SHEET CONTENTS
FRAME ELEVATIONS

A1 SCALE	
A2 SCALE	
A3 SCALE	1:50

ISSUE	SHEET No.
1	S2.01
JOB No. 3951-500	

S2.01 - FRAME ELEVATIONS - 09:23am - 03.6.12

Te Kaunihera-ā-Rohe o Ngāmotu
NEW PLYMOUTH DISTRICT COUNCIL
newplymouthnz.com

Application for Building Consent Amendment

Building Act 2004

AMENDMENT

01_ 100512

Examples of variations to building consents that are considered minor include:

- Substituting one internal lining for a similar internal lining.
- Substituting the type of timber treatment.
- Minor wall bracing changes.
- A change to a component (eg, fixing bracket).
- A construction change (eg, the framing method around a window when the window is changed to a door).
- Changing a room's layout (eg, the position of fixtures in a bathroom or kitchen).
- Changing one brand of insulation for another.
- Building work described in Schedule 1 of the Building Act 2004.

1. Project reference

1a. Building consent number: BC11/111168

1b. Site address: 713 Plymouth Rd Omata

1c. Reason for amendment:
- ◯ Change by owner
- ◯ Other, please specify
- ◯ Information request by Council

Office use only (acceptance)	
Date received	9-5-12
Received by	Tracy
File reference	RG-02-10-03
Property ID	
BC granted/issued	Yes / No
Amendment number	1
AMN12/CC377	

2. Changes covered by this application

2a. Schedule of changes. Two sets of plans must be supplied. Clearly identify all changes to plans and documents with a revision cloud. Include a revision reference on the plan that relates to the changes as provided below.

Old plan number (affected by change)	New plan number	Description of change
		Site report
		Rib Raft Design
		For additional information, please turn over

2b. Building warrant of fitness (Commercial only)

Are there any amendments to systems for which a compliance schedule has been/will be issued?

◯ Yes ◯ No

3. Applicant's declaration

This amendment to the abovementioned building consent is made by me, as ◯ the owner of the property ◯ the applicant, authorised by the owner to make this amendment

Name (print clearly): by e-mail. Signature: Date: 9/5/12

Phone: Mobile: Fax: Email:

Office use only (Processing)

Team	Approved	Refused	Comments ~~to be [illegible]~~
Planning			
Development Engineer			
Environmental Health		14/5/2012	Engineer check ✓
Building			
Engineer (specialist)			

0.25 hrs

Liardet Street, Private Bag 2025, New Plymouth 4340, NZ. Telephone 06-759 6060, Fax 06-759 6072, Email enquiries@npdc.govt.nz, Website www.newplymouthnz.com

© New Plymouth District Council 2011

AMENDMENT

01 _ 100512

Tse Taranaki & Associates Limited
STRUCTURAL AND CIVIL ENGINEERS - PROJECT MANAGERS

30 April 2012

3951/500

Ian Pritchard Architects
P O Box 112
NEW PLYMOUTH

COPY

Attention: Mr Ian Pritchard

Dear Sir,

RE: EARTHWORKS FOR M & R PERRETT 713 PLYMOUTH ROAD, NEW PLYMOUTH

1.0 Scope

Tse Taranaki and Associates Limited have been employed by M & R Perrett to provide quality control for the placement of certified fill across the proposed building site at the south west corner of the site. Refer Tim Hansen Plan Service Plan Sheet Number 6 of 6 Dated February 2012.

2.0 Earthworks

The earthworks have been staged over two years. Stage 1 was completed by Greg Roper Earth Movers utilising clean clay silt cut from the site and adjacent Lot to the south. Stage II was completed by Fulton Hogan initially placing crushed metal and subsequently 500mm of clay silt sourced on site.

3.0 Combination Monitoring

The subgrade was cut level and benched and tested prior to filling. Fill was clean clay silt placed in level layers not exceeding 150mm loose. The fill was compacted using rubber tyred and vibrating steel rollers and scrapers. The undrained shear strength and bearing strength was monitored using Shear Vanes and Scala Penetrometers.

The crushed hardfill was tested by Opus International Consultants using a nuclear densometer.

Regular tests were completed at 500mm maximum height intervals.

The building platform extended beyond the exterior of the proposed building in accordance with NZS3604:2011.

4.0 Building Platform

We consider that a suitable building site is available and standard house foundations in accordance with NZS3604:2011 can be used. Foundations should extend a minimum of 300mm into the medium to firm clay silt layer. We recommend that foundation loads should not exceed a safe bearing pressure of 100 kPa.

The limitations of NZS3604:2011 should be adhered to in relation to foundation in close proximity to steep banks or adjacent to the perimeter of the certified fill.

AMENDMENT

01_ 100512

5.0 Limitation

The geotechnical opinions and recommendations which are contained in this report are based on the site conditions as they presently exist and further assume that the exploratory holes are representative of subsurface conditions throughout the site i.e. inferences about the nature and continuity of ground conditions away from the bore holes have been made in the preparation of this report. It is assumed that subsurface conditions everywhere are not significantly different from those disclosed by the investigation.

We should be notified of any subsurface conditions, which appear to be different from those as disclosed by this investigation so that these conditions may be reviewed, and our recommendation reconsidered where necessary.

The above site investigation did not include site inspection for chemical contamination of subsoil.

Yours faithfully
Tse Taranaki and Associates Limited

FRANK KERSLAKE

Civil & Structural Engineers
PO Box 1039
New Plymouth
ENGINEERING M 021 995 [illegible]

AMENDMENT

01 100512

CONCRETE RAFT FLOOR DESIGN

completed by Matt Peacock BE Structural Engineer

Project	***Williams new house***
Address	***lot 1 699 Plymouth Road New Plymouth***
Project Number	***12940***
Date	***30 April 2012***

Description of building — *Proposed new residential dwelling, single level, light weight roof & weatherboard cladding*

Site soil conditions: — *We have assumed an Ultimate state bearing capacity of 150kPa for the ground under the dwelling. The contractor responsible for the ground works and soil testing is required to confirm this minimum bearing capacity before the raft floor can be constructed*

Design Data

Concrete weight Wc:	24 kN/m^3	
Roof dead load Gr	0.45 kPa	*light roof*
Super Imposed dead load Gs	0.6 kPa	
Wall dead load Gw	0.4 kPa	*Timber wall weatherboard cladding*
Roof live load Qr	0.25 kPa	
Garage Floor Live load Qf	2.5 kPa	*Vehicle weight*
Dwelling floor Live load Qdl	1.5 kPa	*Residential*
Strength reduction Factors		
Concrete Φc:	0.85	
Soil Φs	0.33	

Wind Zone	Very High	
Earthquake Zone	Zone 1, D class soil	
Soil bearing capacity Pu'	150 kPa	*assumed minimum value*
Slab thickness ts	85 mm	
Roof Pitch	25 degrees	

Floor Slab Design

Taking garage as worst load case

ULS applied load Pgu = 1.2G + 1.5Q
6.8 kN/m^2

Design raft floor as 2 way spanning slab
Lx = Ly = 1.2 m

Slab design moment Mgs* = Pgu x $Lx^2/16$
0.61 kNm/m

Slab reinforcing to be grade 500E floor Mesh
As = 147.0 mm^2
fy = 500 MPa
d = 40 mm

Flexural capacity ΦMn = Φc As fy d 0.95
2.37 kNm/m

>> *ΦMn >Mgs** *slab reinforcing ok*

Minimum reinforcing requirement
Asmin = 0.0015 x ts x 1000
153 mm^2

Available reinforcing = 1xD12 + 500E mesh
Ap = 260.0 mm^2

>> *Sufficient reinforcing to meet minimum requirement*

Project *Williams new house*
Address *lot 1 699 Plymouth Road New Plymouth*

Civil & Structural Engineers
PO Box 1059
New Plymouth
ENGINEERING M 027 455 4[illegible]

AMENDMENT

01 _ 100512

100mm wide Rib Design

Applied load per 1.2x1.2m pod

$Fur = Pgu \times 1.2^2$

9.79 *kN*

Supporting area of concrete ribs

Ar = 1.1m x 4(sides) x 0.1m

0.44 *m*

Applied ground pressure Pa = Fur / Ar

22.25 *kPa*

From soil test results the allowable bearing capacity

Ps = Φs x Pu

49.5 *kPa*

>> *Ps > Pa* *100mm wide rds ok*

External Footing Design

Loads on footing

	LW	G	Q	
Roof	7	3.15	1.75	*LW = loaded width*
Wall	2.4	0.96	0	
Upper Floor	0	0	0	
Ground Floor	0.6	1.224	0.9	
Footing	0.3	2.16	0	*300x300 concrete*

ULS applied load Wu = 1.2G + 1.5Q

12.97 *kN/m*

Applied ground pressure Pu = Wu / 0.3m

43.2 *kPa*

>> *Ps > Pu* *300mm wide footing ok*

Raft Slab Shear Resistance Check

From NZS1170.5 the design philosophy is to prevent structure damage through movement up to a SLS earthquake event and over this level accepting that with increase earthquake event there will be increasing levels of damage while the structural system continues to perform its load bearing function.

Soil class taken as D

Elastic site Hazard Spectrum for horizontal loads C(t) = Ch(t) Z R N(T,D)
for assumed values of

Period T1 =	0.4	& kμ = [(μ-1)T1/0.7] + 1.0
Structure ductility SLS μ =	1.0	1.14 ULS
Structure ductility ULS μ =	1.25	
Ch(t) =	3	
Z =	0.18	
Rs (25 yrs) =	0.25	
Ru (500 yrs) =	1	
N(T,D) SLS =	1	
>> C(t) SLS =	0.14	
C(t) ULS =	0.54	

Horizontal Design Action Cd(T1) = C(T1) Sp / kμ for base sliding Sp = 1.0

>> Cd(T1) SLS = 0.14
Cd(T1) ULS = 0.47

Dr Kevin McManus of Canterbury completed testing (Geotechnical Society Symposium 2003) and found that the friction coefficient of a concrete slab on polythene on sand had a peak friction coefficient of 0.42 for an unloaded slab. Therefore it can be seen that under SLS loads slab friction provides significantly greater resistance than the design action Cd(T1) = 0.14 and under ULS action acceptable sliding movement is possible

>> shear key piles are unnecessary for the concrete raft floor

Civil & Structural Engineers
PO Box 1059
New Plymouth
ENGINEERING M 021-[illegible]

AMENDMENT

01 100512

CONCRETE RAFT FLOOR DESIGN

completed by Matt Peacock BE Structural Engineer

Project	***Williams new house***
Address	***lot 1 699 Plymouth Road New Plymouth***
Project Number	***12946***
Date	***30 April 2012***
Description of building	*Proposed new residential dwelling, single level, light weight roof & weatherboard cladding*
Site soil conditions	*We have assumed an Ultimate state bearing capacity of 150kPa for the ground under the dwelling. The contractor responsible for the ground works and soil testing is required to confirm this minimum bearing capacity before the raft floor can be constructed*

Design Data

Concrete weight Wc:	24 kN/m^3	
Roof dead load Gr.	0.45 kPa	*light roof*
Super Imposed dead load Gs	0.5 kPa	
Wall dead load Gw	0.4 kPa	*Timber wall weatherboard cladding*
Roof live load Qr	0.25 kPa	
Garage Floor Live load Qf	2.5 kPa	*Vehicle weight*
Dwelling floor Live load Qdf	1.5 kPa	*Residential*
Strength reduction Factors		
Concrete Φc	0.85	
Soil Φs	0.33	
Wind Zone	Very High	
Earthquake Zone	Zone 1 D class soil	
Soil bearing capacity Pu	150 kPa	*assumed minimum value*
Slab thickness ts.	85 mm	
Roof Pitch	25 degrees	

Floor Slab Design

Taking garage as worst load case

ULS applied load Pgu = 1.2G + 1.5Q
6.8 kN/m^2

Design raft floor as 2 way spanning slab
Lx = Ly = 1.2 m

Slab design moment Mgs* = Pgu x Lx^2/16
0.61 kNm/m

Slab reinforcing to be grade 500E floor Mesh
As = 147.0 mm^2
fy = 500 MPa
d = 40 mm

Flexural capacity ΦMn = Φc As fy d 0.95
2.37 kNm/m

>> ΦMn >Mgs* *slab reinforcing ok*

Minimum reinforcing requirement
Asmin = 0.0018 x ts x 1000
153 mm^2

Available reinforcing is 1xD12 + 500E mesh
As = 280.0 mm^2

>> *Sufficient reinforcing to meet minimum requirement*

AMENDMENT 01 — 100512

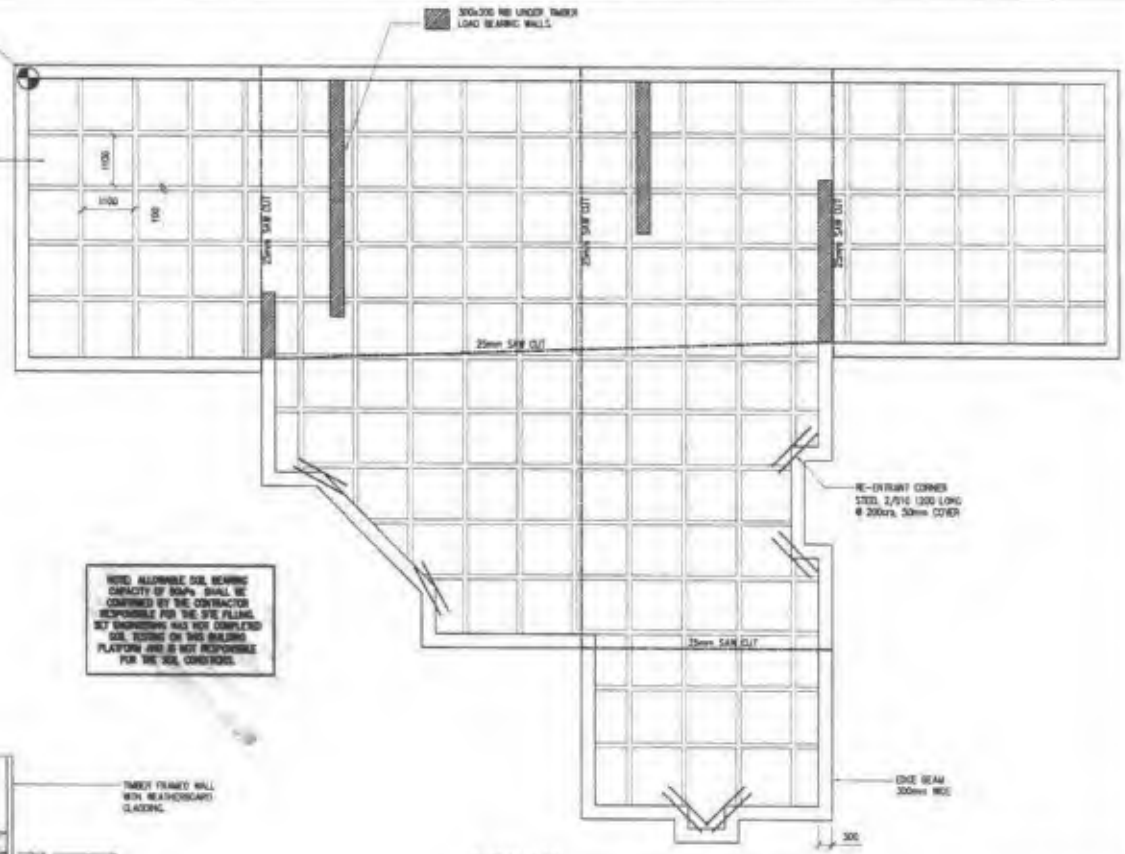

FLOOR PLAN
Scale 1:100

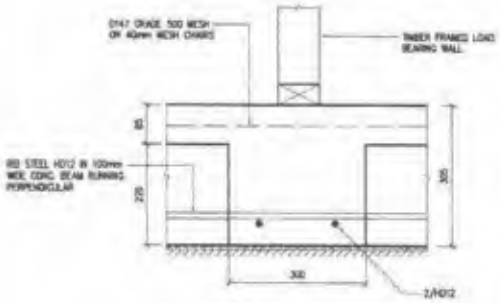

INTERNAL RIB SECTION
Scale 1:10

NOTE: ALLOWABLE SOIL BEARING CAPACITY OF 300kPa SHALL BE CONFIRMED BY THE CONTRACTOR RESPONSIBLE FOR THE SITE FILLING. SCT ENGINEERING HAS NOT COMPLETED SOIL TESTING ON THIS BUILDING PLATFORM AND IS NOT RESPONSIBLE FOR THE SOIL CONDITIONS.

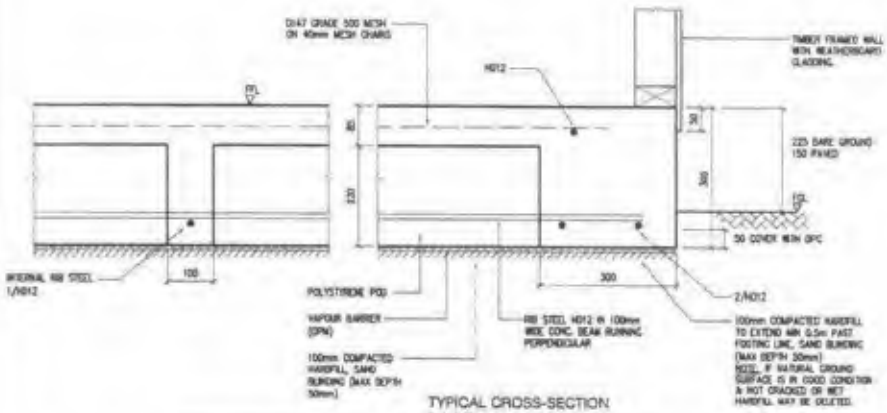

TYPICAL CROSS-SECTION
Scale 1:10

NOTES:

1. REFER TO ARCHITECTURAL DRAWINGS FOR ALL SETOUT DIMENSIONS, RECESSES AND SERVICES POSITIONS. DO NOT SCALE OFF THIS DRAWING.

2. FOOTINGS AND SLAB TO BE 25MPa RAFTMIX AS PER FIRTH SPECIFICATION.

3. FLOOR SLAB CONSTRUCTION SHALL BE IN ACCORDANCE WITH FIRTH RIBRAFT FLOOR SYSTEM SECTION 2 INSTALLATION INFORMATION.

4. SAWCUTS
-25mm DEEP SAWCUTS NO LATER THAN 24HRS AFTER CONCRETE POUR.
-AT 6m c/s WHERE THE CONCRETE IS TO BE EXPOSED OR BRITTLE COVERING PLACED OVER OR WHERE FLOOR PLAN CHANGES SIGNIFICANTLY.
-BAY DIMENSIONS SHALL BE LIMITED TO A MAXIMUM BASE LENGTH WIDTH OF 2:1

5. SERVICES
-IDEALLY SERVICE DUCTS SHALL BE PLACED UNDERGROUND AND BROUGHT UP THROUGH THE RIBRAFT FLOOR.
-SERVICES SHALL NOT BE PLACED WITHIN ANY CONCRETE EXCEPT TO CROSS THAT SECTION OF CONCRETE. IE DONT PLACE ALONG FOOTING LINES.
-HALF SERVICE DIAMETER THROUGH FOOTINGS SHALL BE 50mm.

6. LOAD BEARING RIB
-WE HAVE INDICATED THE RIBS FOR INTERNAL LOAD BEARING WALLS IN THE HOUSE. THE LOCATION OF THESE HAVE BEEN PROVIDED BY THE ROOF TRUSS MANUFACTURE. IF THERE ARE ADDITIONAL INTERNAL LBW's PRESENT PROVIDE 300mm WIDE RIB WITH 2H012 BOTTOM BARS.

7. POLYSTYRENE PODS SHALL BE INSULATION GRADE EXPANDED POLYSTYRENE 220mm THICK AND ARE 1100mm X 1100mm SQUARE.

8. SHEAR PILES
-NO SHEAR PILES ARE REQUIRED FOR THIS DWELLING.

ALL DIMENSIONS TO BE VERIFIED ON SITE BEFORE MAKING ANY SHOP DRAWINGS OR COMMENCING ANY WORK. IF IN DOUBT ASK

COPYRIGHT The copyright in this document is vested in Sch Engineering Ltd. The contents of this document may not be reproduced, either in whole or part, by any means whatsoever without the prior written consent of Sch Engineering Ltd.

REV	DATE	AMENDMENT	BY	CHK	ENG	APP	APP
0	30.04.12	ISSUED FOR APPROVAL	AP	AP	AP	AP	

ENGINEERING

Civil & Structural Engineers
PO BOX 1059
New Plymouth
M 021 495540

	NAME	DATE
DRAWN	W PEACOCK	FEB 2012
CHECKED		
ENGINEER	W PEACOCK	FEB 2012
APPROVED		
SCALE	A3	AS SHOWN A3
PROJECT No.	12946	

WILLIAMS NEW HOUSE
LOT 1 699 PLYMOUTH RD
OAKURA
RIBRAFT FLOOR SLAB DETAILS

Drawing No. 12946-01 REV 0

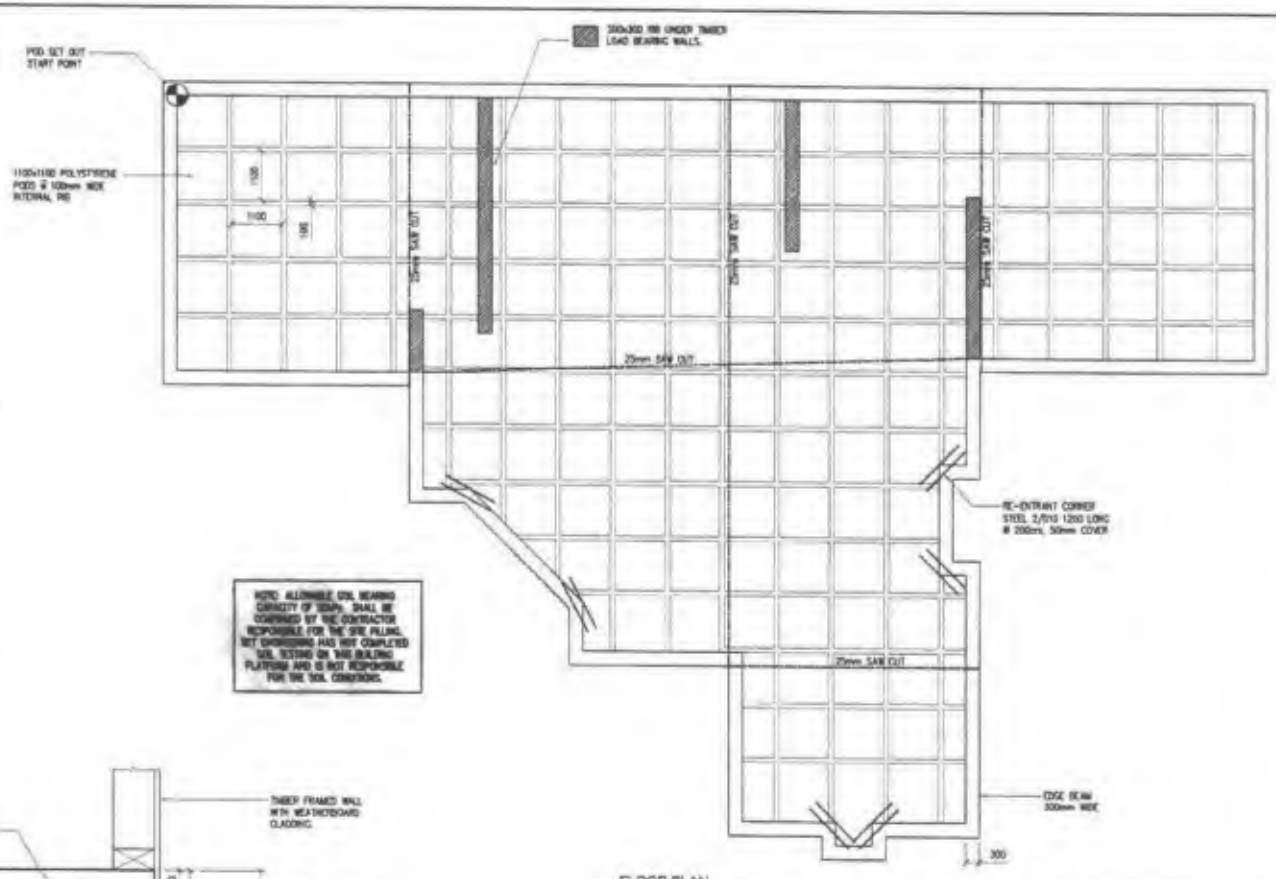

FLOOR PLAN
Scale 1:100

NOTE: ALLOWABLE SOIL BEARING CAPACITY OF 100kPa SHALL BE CONFIRMED BY THE CONTRACTOR RESPONSIBLE FOR THE SITE FILLING. NOT ENGINEERING HAS NOT COMPLETED SOIL TESTING ON THIS BUILDING PLATFORM AND IS NOT RESPONSIBLE FOR THE SOIL CONDITIONS.

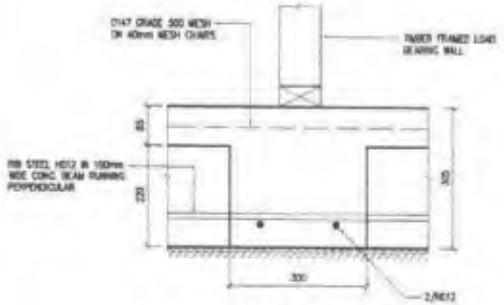

INTERNAL RIB SECTION
Scale 1:10

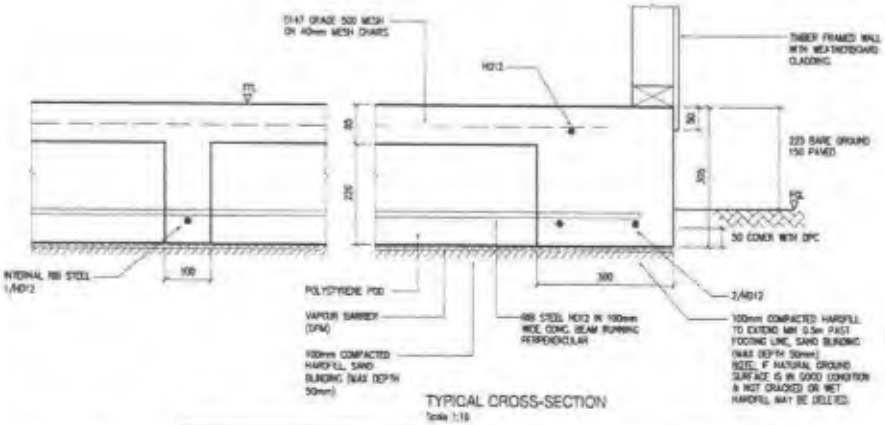

TYPICAL CROSS-SECTION
Scale 1:10

NOTES:

1. REFER TO ARCHITECTURAL DRAWINGS FOR ALL SETOUT DIMENSIONS, RECESSES AND SERVICES POSITIONS. DO NOT SCALE OFF THIS DRAWING.

2. FOOTINGS AND SLAB TO BE 25MPa RAFTMIX AS PER PATH SPECIFICATION.

3. FLOOR SLAB CONSTRUCTION SHALL BE IN ACCORDANCE WITH PATH RIBRAFT FLOOR SYSTEM SECTION 2 INSTALLATION INFORMATION.

4. SAWCUTS
-25mm DEEP SAWCUTS NO LATER THAN 24HRS AFTER CONCRETE POUR.
-AT 6m crs WHERE THE CONCRETE IS TO BE EXPOSED OR BRITTLE COVERING PLACED OVER ON WHERE FLOOR PLAN CHANGES SIGNIFICANTLY.
-BAY DIMENSIONS SHALL BE LIMITED TO A MAXIMUM RATIO LENGTH:WIDTH OF 2:1

5. SERVICES
-IDEALLY SERVICE DUCTS SHALL BE PLACED UNDERGROUND AND BROUGHT UP THROUGH THE RIBRAFT FLOOR.
-SERVICES SHALL NOT BE PLACED WITHIN ANY CONCRETE EXCEPT TO CROSS THAT SECTION OF CONCRETE, IE DONT PLACE ALONG FOOTING LINES.
-MAX SERVICE DIAMETER THROUGH FOOTINGS SHALL BE 50mm.

6. LOAD BEARING RIB
-WE HAVE INDICATED THE RIBS FOR INTERNAL LOAD BEARING WALLS IN THE HOUSE. THE LOCATION OF THESE HAVE BEEN PROVIDED BY THE ROOF TRUSS MANUFACTURE. IF THERE ARE ADDITIONAL INTERNAL LBW's PRESENT PROVIDE 300mm WIDE RIB WITH 2HD12 BOTTOM BARS.

7. POLYSTYRENE PODS SHALL BE INSULATION GRADE EXPANDED POLYSTYRENE 220mm THICK AND ARE 1100mm X 1100mm SQUARE.

8. SHEAR PILES
-NO SHEAR PILES ARE REQUIRED FOR THIS DWELLING.

ALL DIMENSIONS TO BE VERIFIED ON SITE BEFORE MAKING ANY "SHOP" DRAWINGS OR COMMENCING ANY WORK. IF IN DOUBT ASK.

COPYRIGHT The copyright in this document is vested in Sat Engineering Ltd. The contents of this document shall not be reproduced, either in whole or part, nor any method whatsoever without the prior written consent of Sat Engineering Ltd.

REV	DATE	AMENDMENT	BY	CHK	CHK	APP	APP
0	30.04.12	ISSUED FOR APPROVAL	MP	MP	MP	MP	

ENGINEERING

Civil & Structural Engineers
PO BOX 1059
New Plymouth
M: 021 495540

	NAME	DATE
DRAWN	M PEACOCK	FEB 2012
CHECKED		
ENGINEER	M PEACOCK	FEB 2012
APPROVED		
SCALES	A3 AS SHOWN A3	
PROJECT No.	12946	

WILLIAMS NEW HOUSE
LOT 1 699 PLYMOUTH RD
OAKURA
RIBRAFT FLOOR SLAB DETAILS

Drawing No. 12946-01 REV 0

AMENDMENT
01 — 100512

Te Kaunihera-ā-Rohe o Ngāmotu
NEW PLYMOUTH DISTRICT COUNCIL
newplymouthnz.com

Application for Building Consent Amendment

Building Act 2004

Examples of variations to building consents that are considered minor include:

- Substituting one internal lining for a similar internal lining.
- Substituting the type of timber treatment.
- Minor wall bracing changes.
- A change to a component (eg, fixing bracket).
- A construction change (eg, the framing method around a window when the window is changed to a door).
- Changing a room's layout (eg, the position of fixtures in a bathroom or kitchen).
- Changing one brand of insulation for another.
- Building work described in Schedule 1 of the Building Act 2004

Jan Hood
14 APR 2011
New Plymouth

1. Project reference

1a. Building consent number: BC11/111168

1b. Site address: Plymouth Rd

1c. Reason for amendment
- ◯ Change by owner
- ◯ Other, please specify
- ◯ Information request by Council

Office use only (acceptance)	
Date received	14/4/11
Received by	Adrian
File reference	RG-02-10-03
Property ID	103966
BC granted/issued	Yes / No
Amendment number	
AMN	

2. Changes covered by this application

2a. Schedule of changes. Two sets of plans must be supplied. Clearly identify all changes to plans and documents with a revision cloud. Include a revision reference on the plan that relates to the changes as provided below.

Old plan number (affected by change)	New plan number	Description of change
		For additional information, please turn over

2b. Building warrant of fitness (Commercial only)

Are there any amendments to systems for which a compliance schedule has been/will be issued?

◯ Yes ◯ No

3. Applicant's declaration

This amendment to the abovementioned building consent is made by me, as
- ◯ the owner of the property
- ◯ the applicant, authorised by the owner to make this amendment

Name (print clearly) | Signature | Date ___ / ___ / ___

Phone | Mobile | Fax | Email

Office use only (Processing)

Team	Approved	Refused	Comments
Planning			
Development Engineer			
Environmental Health			
Building			
Engineer (specialist)			

Liardet Street, Private Bag 2025, New Plymouth 4340, NZ. Telephone 06-759 6060, Fax 06-759 6072, Email enquiries@npdc.govt.nz, Website www.newplymouthnz.com

© New Plymouth District Council 2011

Te Kaunihera-ā-Rohe o Ngāmotu
NEW PLYMOUTH DISTRICT COUNCIL
newplymouthnz.com

Application for Building Consent Amendment

Building Act 2004

Examples of variations to building consents that are considered minor include:

- Substituting one internal lining for a similar internal lining.
- Substituting the type of timber treatment.
- Minor wall bracing changes.
- A change to a component (eg, fixing bracket).
- A construction change (eg, the framing method around a window when the window is changed to a door).
- Changing a room's layout (eg, the position of fixtures in a bathroom or kitchen).
- Changing one brand of insulation for another.
- Building work described in Schedule 1 of the Building Act 2004.

3.30 pm
13 APR 2011

1. Project reference

1a. Building consent number: BCII/111168.

1b. Site address: Plymouth Rd Omata

1c. Reason for amendment
- ◯ Change by owner
- ◯ Other, please specify
- ◯ Information request by Council

Office use only (acceptance)	
Date received	13/4/11
Received by	Gaynor
File reference	RG-02-10-03
Property ID	108966
BC granted/issued	Yes / No
Amendment number	
AMN	

2. Changes covered by this application

2a. Schedule of changes. Two sets of plans must be supplied. Clearly identify all changes to plans and documents with a revision cloud. Include a revision reference on the plan that relates to the changes as provided below.

Old plan number (affected by change)	New plan number	Description of change
		INTERNAL CONCRETE FOUNDATION
		SUPPORT REQUIREMENTS - 12KN
		PRYDA SOLUTIONS
		For additional information, please turn over

2b. Building warrant of fitness (Commercial only)

Are there any amendments to systems for which a compliance schedule has been/will be issued?

◯ Yes ◯ No

3. Applicant's declaration

This amendment to the abovementioned building consent is made by me, as ◯ the owner of the property ◯ the applicant, authorised by the owner to make this amendment

Name (print clearly)	Signature	Date
DAVID WILLIAMS		13/04/11

Phone	Mobile	Fax	Email
752 7978	021 414668		D.H.WILLIAMS@xtra.co.nz

Office use only (Processing)

Team	Approved	Refused	Comments
Planning			
Development Engineer			
Environmental Health			
Building			
Engineer (specialist)			

Liardet Street, Private Bag 2025, New Plymouth 4340, NZ. Telephone 06-759 6060, Fax 06-759 6072, Email enquiries@npdc.govt.nz, Website www.newplymouthnz.com

© New Plymouth District Council 2011

Te Kaunihera-ā-Rohe o Ngāmotu
NEW PLYMOUTH DISTRICT COUNCIL
newplymouthnz.com

Application for Building Consent Amendment

Building Act 2004

Examples of variations to building consents that are considered minor include:

- Substituting one internal lining for a similar internal lining.
- Substituting the type of timber treatment.
- Minor wall bracing changes.
- A change to a component (eg, fixing bracket).
- A construction change (eg, the framing method around a window when the window is changed to a door).
- Changing a room's layout (eg, the position of fixtures in a bathroom or kitchen).
- Changing one brand of insulation for another.
- Building work described in Schedule 1 of the Building Act 2004.

1. Project reference

1a. Building consent number: DM1313865 - AMN 12/00455

1b. Site address: 699 Plymouth Road, Ornata

1c. Reason for amendment:
- ◯ Change by owner
- ◯ Other, please specify
- ✓ Information request by Council

Office use only (acceptance)	
Date received	
Received by	
File reference	RG-02-10-03
Property ID	
BC granted/issued	Yes / No
Amendment number	
AMN /	

2. Changes covered by this application

2a. Schedule of changes. Two sets of plans must be supplied. Clearly identify all changes to plans and documents with a revision cloud. Include a revision reference on the plan that relates to the changes as provided below.

Old plan number (affected by change)	New plan number	Description of change
	1A (4 pages)	Additional calculations for 4.75-4.9m maximum span as requested by Jeck Icaro letter dated 7 June 2012.
		For additional information, please turn over

2b. Building warrant of fitness (Commercial only)

Are there any amendments to systems for which a compliance schedule has been/will be issued?

◯ Yes ✓ No

3. Applicant's declaration

This amendment to the abovementioned building consent is made by me, as ◯ the owner of the property ✓ the applicant, authorised by the owner to make this amendment

Name (print clearly)	Signature	Date
Tese Taranaki & Associates Ltd	Glenn Mahony (Digitally signed by Glenn Mahony DN: cn=Glenn Mahony, c=NZ, o=Tese Taranaki & Associates Ltd, email=Glenn@tsetaranaki.co.nz Date: 2012.06.12 17:43:45 +12'00')	/ /

Phone	Mobile	Fax	Email
Ph 758 8390			Tse@tsetaranaki.co.nz

Office use only (Processing)

Team	Approved	Refused	Comments
Planning			
Development Engineer			
Environmental Health			
Building			
Engineer (specialist)			

Liardet Street, Private Bag 2025, New Plymouth 4340, NZ. Telephone 06-759 6060, Fax 06-759 6072, Email enquiries@npdc.govt.nz, Website www.newplymouthnz.com

© New Plymouth District Council 2011

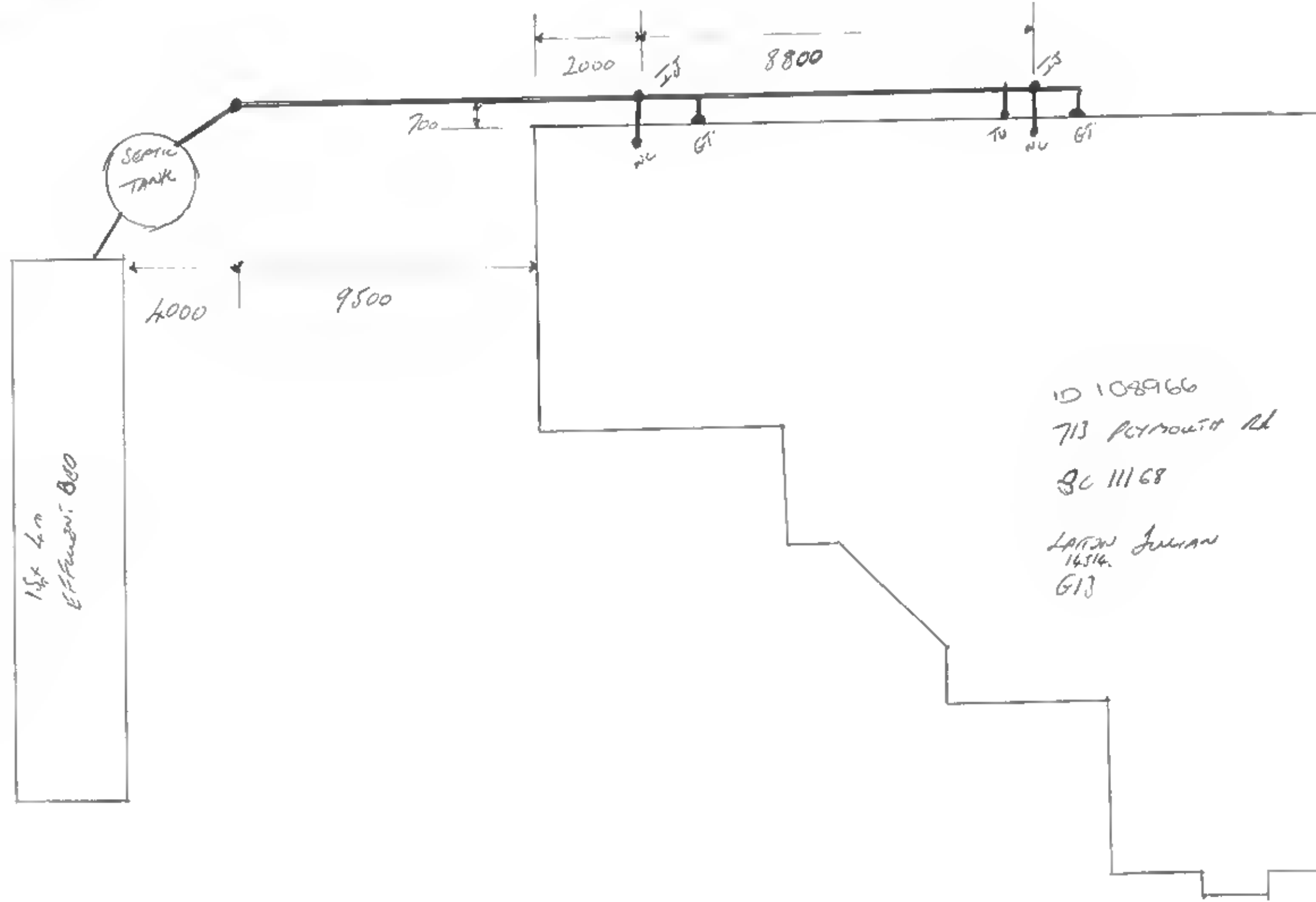
2000
8800
700
SEPTIC TANK
4000
9500
1st Lm EFFLUENT BED
ID 108966
713 PLYMOUTH Rd
BC 11168
LATON JULIAN
14514
613

ALL WINDOWS & DOORS TO COMPLY WITH NZS 4211/4223

WINDOW GLAZING TO BE 0.26 R VALUE (MINIMUM) IE.DOUBLE GLAZING

REFER ATTATCHED DETAILS (E2/LINEA/NZS 3604 A2)FOR WINDOW FLASHINGS etc

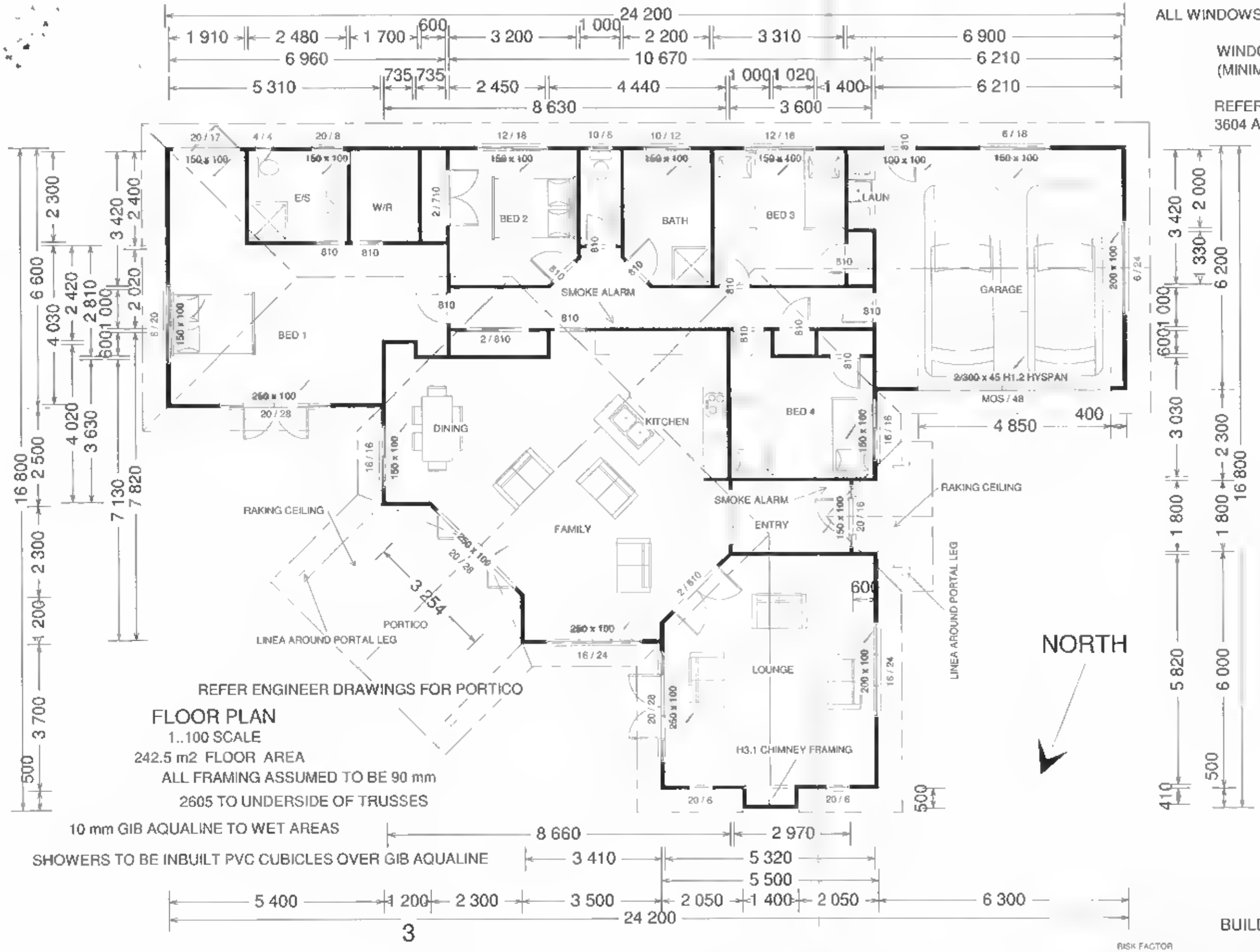

REFER ENGINEER DRAWINGS FOR PORTICO

FLOOR PLAN

1..100 SCALE

242.5 m2 FLOOR AREA

ALL FRAMING ASSUMED TO BE 90 mm

2605 TO UNDERSIDE OF TRUSSES

10 mm GIB AQUALINE TO WET AREAS

SHOWERS TO BE INBUILT PVC CUBICLES OVER GIB AQUALINE

3

4 2

1

ELEVATIONS

ALL WORK TO BE CARRIED OUT IN ACCORDANCE WITH NZS3604 (2011) AND LOCAL COUNCIL BY LAWS... BUILDER AND ALL CONTRACTORS TO CHECK AND VERIFY ALL DETAILS AND DIMENSIONS ETC PRIOR TO COMMENCEMENT OF ANY WORK

FEBRUARY 2011

tom hansen@xtra.co.nz
Tom Hansen
Plan Service
Phone 07 8710337

WALL FRAMING

VSG 8 & MSG 8

90 x 45 H1.2 STUDS @ 600 CRS UP TO 3.000

90 x 45 H1.2 STUDS @ 400 CRS FROM 3.000 TO 3.600

90 x 90 H1.2 STUDS @ 400 CRS FROM 3.600 TO 4.200

90 x 45 H1.2 NOGS @ 800 CRS

ALL LINTELS / TOP & BOTTOM PLATES etc H1.2 UNLESS STATED OTHERWISE

BUILDING ENVELOPE RISK MATRIX

RISK FACTOR	LOW	MEDIUM	HIGH	VERY HIGH	SUB TOTALS
WIND ZONE (NZS 3604)	0	0	1	2	1
NUMBER OF STOREYS	0	1	2	4	0
ROOF/WALL INTERSECTION DESIGN	0	1	3	5	0
EAVES WIDTH	0	1	2	5	0
ENVELOPE COMPLEXITY	0	1	3	6	0
DECK DESIGN	0	2	4	6	0
				TOTAL RISK SCORE	1

PROPOSED RESIDENCE FOR DAVID & HELENA WILLIAMS AT LOT 1 PLYMOUTH ROAD

Approved BC11/111168 Date 18/4/11
NPDC Approved 18 APR 2011

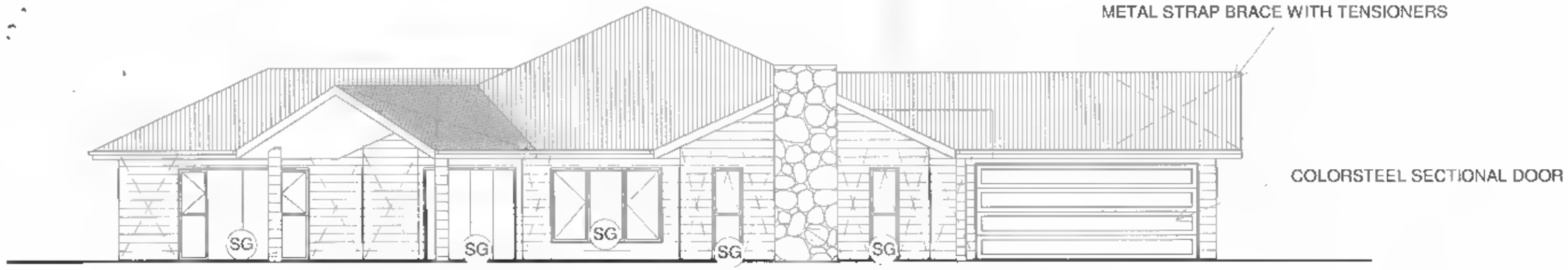

LINEA AROUND PORTAL LEG

1
1..100 SCALE

SELECTED CRAFTSTONE VENEER OVER
VENTCLAD CAVITY SYSTEM OVER FRAMEGARD
BUILDING WRAP OVER H3.1 CHIMNEY FRAMING

150mm (min) FLOOR TO FINISHED GROUND

LONGRUN CORRUGATED COLORSTEEL OVER "THERMAKRAFT 215" SELF SUPPORT BREATHER PAPER

2
1..100 SCALE

600 mm OVERHANG FROM FRAME

NPDC A
18 APR 2011

SAFETY GLASS

3
1..100 SCALE

25 DEGREES ROOF PITCH

METAL FASCIA WITH EXTERNAL GUTTER

HARDIES LINEA WEATHERBOARD
OVER FRAMEGARD BUILDING WRAP

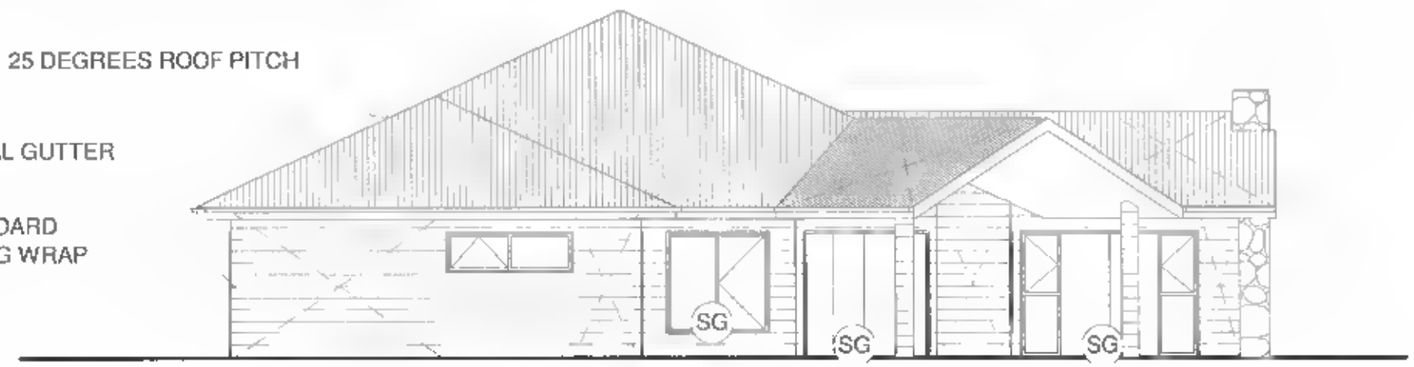

4
1..100 SCALE

ALL WORK TO BE CARRIED OUT IN ACCORDANCE WITH NZS3604 (2011) AND LOCAL COUNCIL BY LAWS... BUILDER AND ALL CONTRACTORS TO CHECK AND VERIFY ALL DETAILS AND DIMENSIONS ETC PRIOR TO COMMENCEMENT OF ANY WORK

FEBRUARY 2011

tom hansen@xtra.co.nz
Tom Hansen
Plan Service
Phone 07 8710337

PROPOSED RESIDENCE FOR DAVID & HELENA WILLIAMS AT LOT 1 PLYMOUTH ROAD

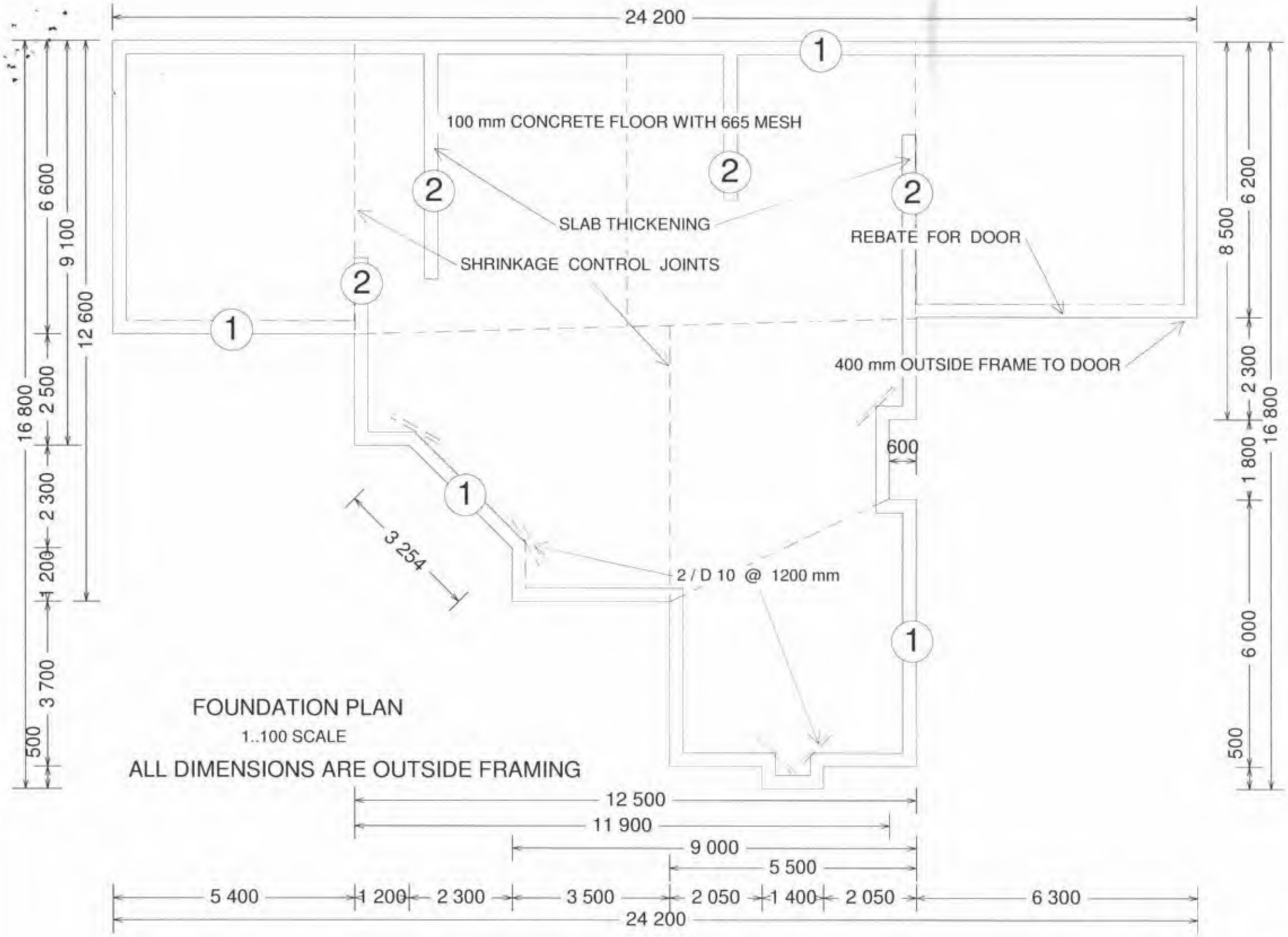

FOUNDATION PLAN

1..100 SCALE

ALL DIMENSIONS ARE OUTSIDE FRAMING

NPDC Approved
18 APR 2011

1..50 SCALE

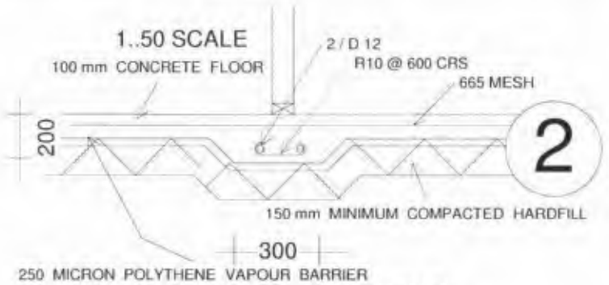

SLAB THICKENING
CHECK WITH TRUSS DESIGN

1..20 SCALE

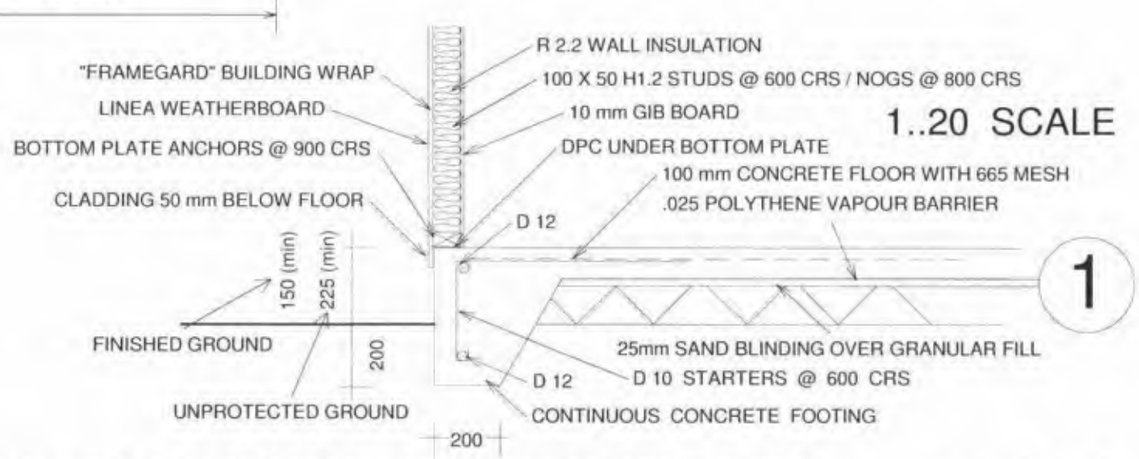

ALL WORK TO BE CARRIED OUT IN ACCORDANCE WITH NZS3604 (2011) AND LOCAL COUNCIL BY LAWS... BUILDER AND ALL CONTRACTORS TO CHECK AND VERIFY ALL DETAILS AND DIMENSIONS ETC PRIOR TO COMMENCEMENT OF ANY WORK

FEBRUARY 2011

tom.hansen@xtra.co.nz
Tom Hansen
Plan Service
Phone 07 8710337

PROPOSED RESIDENCE FOR DAVID & HELENA WILLIAMS AT LOT 1 PLYMOUTH ROAD

25 DEGREES ROOF PITCH

LONGRUN CORRUGATED COLORSTEEL OVER "THERMAKRAFT 215" SELF SUPPORT BREATHER PAPER

CHECK WITH TRUSS DESIGNER IF SLAB THICKENING REQUIRED

WALL & ROOF FRAMING TO BE MSG8/VSG8 GRADING & H1.2 TREATMENT

METAL STRAP BRACE WITH TENSIONERS

TRUSSES / LINTELS & FIXINGS TO BE DESIGNED BY APPROVED TRUSS & FRAMING MANUFACTURER

REFER ATTATCHED DETAILS (E2/LINEA/NZS 3604 A2)FOR WINDOW FLASHINGS etc

GANGNAIL H1.2 TRUSSES @ 900 CRS

R 3.2 CEILING INSULATION

600 mm OVERHANG FROM FRAME

METAL FASCIA WITH EXTERNAL GUTTER

3

3

10 mm GIB BOARD

2605 U / SIDE TRUSS

75 X 40 UT/KD STRAPPING @ 450 CRS

R 2.2 WALL INSULATION

HARDIES LINEA WEATHERBOARD
OVER FRAMEGARD BUILDING WRAP

4.5 mm HARDIFLEX

BED 1

DINING

KITCHEN

100 mm CONCRETE FLOOR WITH 665 MESH

BED 4

GARAGE

150mm (min) FLOOR TO FINISHED GROUND

1

1

1..50 SCALE

COLORSTEEL SECTIONAL DOOR

LONGRUN CORRUGATED COLORSTEEL OVER "THERMAKRAFT 215" SELF SUPPORT ROOF UNDERLAY

GANGNAIL H1.2 TRUSSES @ 900 CRS

75 X 50 H1.2 PURLINS @ 900 CRS

150 X 40 H1.2 CAPPING

R 3.2 CEILING INSULATION

METAL FASCIA
EXTERNAL GUTTER

1..20 SCALE

3

75 X 40 UT/KD STRAPPING @ 450 CRS

10 mm GIB BOARD

10 mm GIB BOARD

4.5 mm HARDIFLEX

H3 EAVE MOULD

100 X 50 H1.2 STUDS @ 600 CRS/NOGS @ 800 CRS

LINEA W/BOARD

R 2.2 WALL INSULATION

"FRAMEGARD" BUILDING WRAP

25 DEGREES ROOF PITCH

75 X 50 H1.2 PURLINS @ 900 CRS

LONGRUN CORRUGATED COLORSTEEL OVER "THERMAKRAFT 215" SELF SUPPORT BREATHER PAPER

GANGNAIL H1.2 TRUSSES @ 900 CRS

R 3.2 CEILING INSULATION

METAL FASCIA WITH EXTERNAL GUTTER

3

3

4.5 mm HARDIFLEX

LINEA AROUND PORTAL LEG

REFER ENGINEER DRAWINGS FOR PORTICO

PORTICO

75 X 40 UT/KD STRAPPING @ 450 CRS

FAMILY

100 mm CONCRETE FLOOR WITH 665 MESH

2605 U / SIDE TRUSS

10 mm GIB BOARD

WC

R 2.2 WALL INSULATION

1

1

1..50 SCALE

ALL WORK TO BE CARRIED OUT IN ACCORDANCE WITH NZS3604 (2011) AND LOCAL COUNCIL BY LAWS... BUILDER AND ALL CONTRACTORS TO CHECK AND VERIFY ALL DETAILS AND DIMENSIONS ETC PRIOR TO COMMENCEMENT OF ANY WORK

FEBRUARY 2011

tom.hansen@xtra.co.nz
Tom Hansen
Plan Service
Phone 07 8710337

PROPOSED RESIDENCE FOR DAVID & HELENA WILLIAMS AT LOT 1 PLYMOUTH ROAD

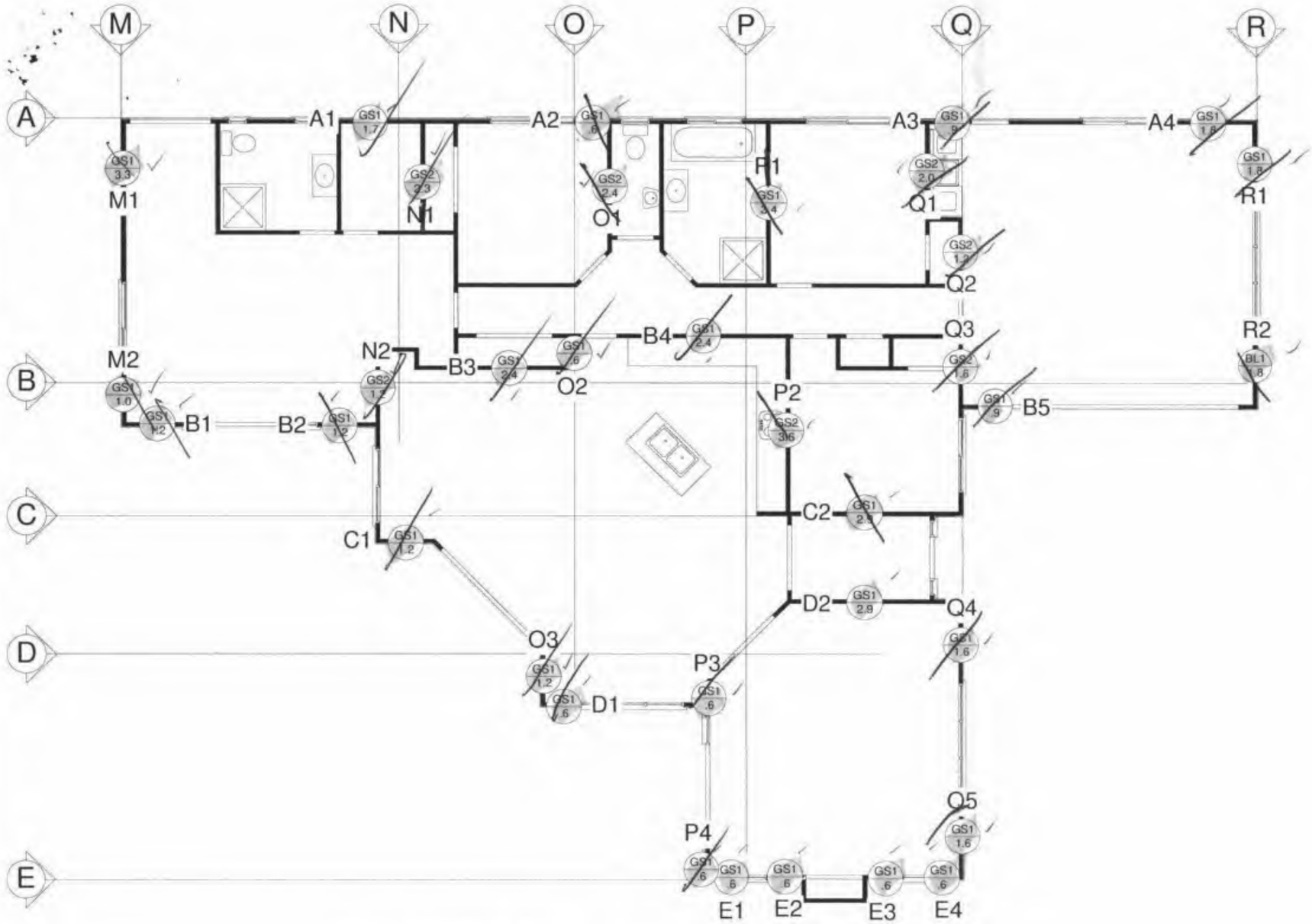

WALL BRACING PLAN

1..100 SCALE

NPDC Approved
16 APR 2011

ALL WORK TO BE CARRIED OUT IN ACCORDANCE WITH NZS3604 (2011) AND LOCAL COUNCIL BY LAWS... BUILDER AND ALL CONTRACTORS TO CHECK AND VERIFY ALL DETAILS AND DIMENSIONS ETC PRIOR TO COMMENCEMENT OF ANY WORK

FEBRUARY 2011

tom.hansen@xtra.co.nz
Tom Hansen
Plan Service
Phone 07 8710337

PROPOSED RESIDENCE FOR DAVID & HELENA WILLIAMS AT LOT 1 PLYMOUTH ROAD

PIPE SIZES

40 mm dia WASTE/BATH/SHOWER/BASINS (3500 max length without vent)
65 mm dia WASTE/BATH/SHOWER/BASINS (10000 max length without vent)
80 mm VENT.PIPES
100 mm SOIL PIPES
100 mm STORMWATER DRAIN
80 mm DOWNPIPES

AS/NZS 3500 PLUMBING SYSTEM

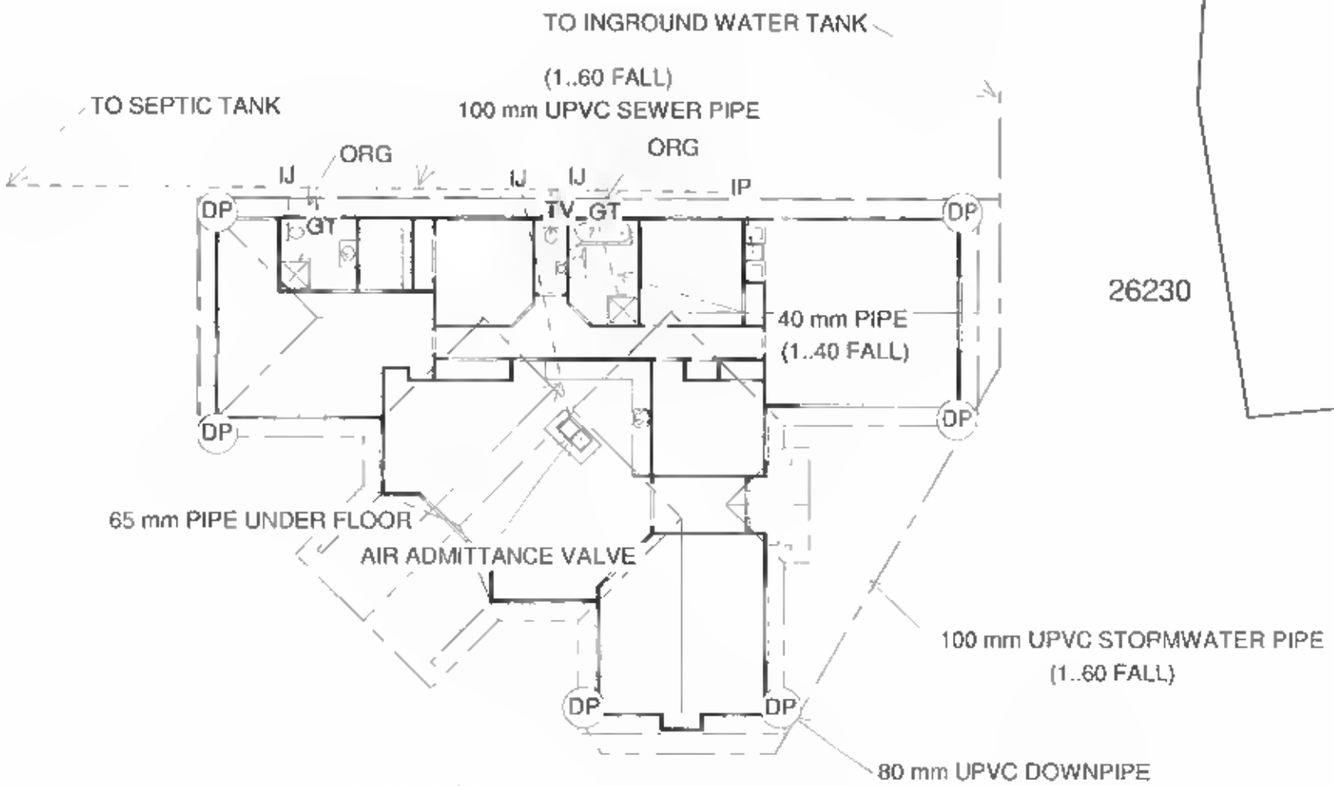

DRAINAGE PLAN
1..200 SCALE

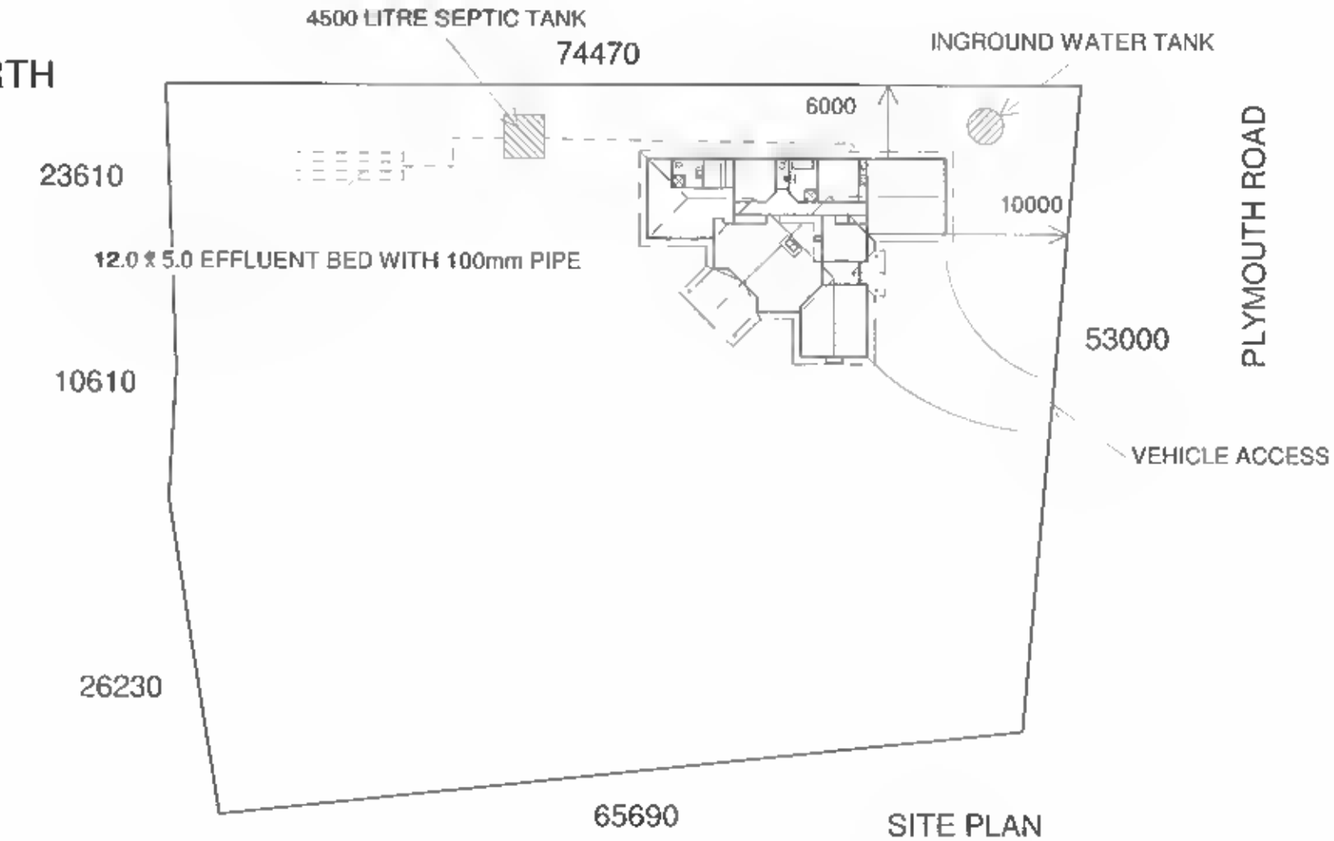

SITE PLAN
1..500 SCALE
4006 m2 SITE AREA
6 % SITE COVERAGE

NPDC
18 APR 2011

ALL WORK TO BE CARRIED OUT IN ACCORDANCE WITH NZS3604 (2011) AND LOCAL COUNCIL BY LAWS... BUILDER AND ALL CONTRACTORS TO CHECK AND VERIFY ALL DETAILS AND DIMENSIONS ETC PRIOR TO COMMENCEMENT OF ANY WORK

FEBRUARY 2011

tom.hansen@xtra.co.nz
Tom Hansen
Plan Service
Phone 07 8710337

PROPOSED RESIDENCE FOR DAVID & HELENA WILLIAMS AT LOT 1 PLYMOUTH ROAD

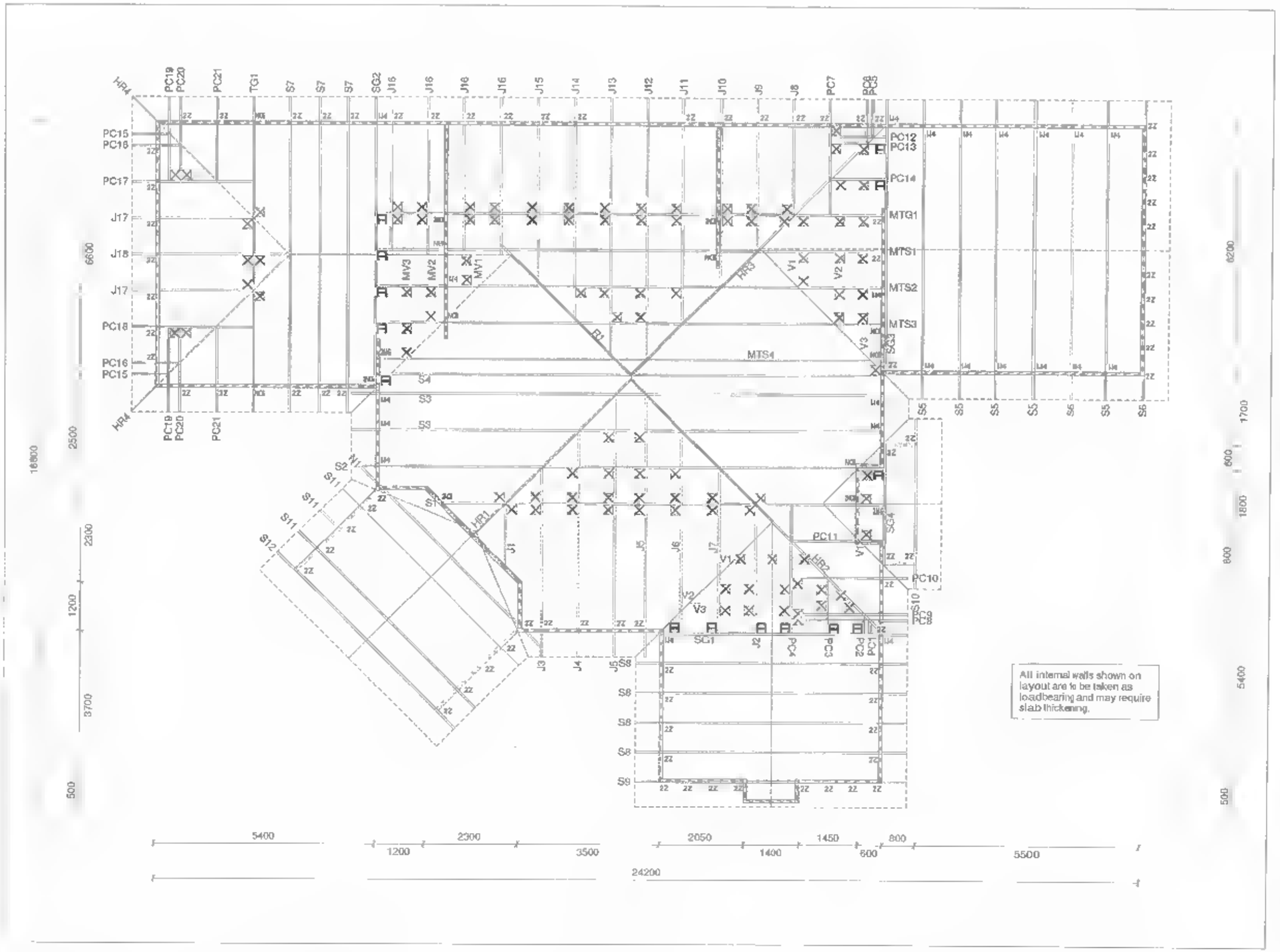

All internal walls shown on layout are to be taken as loadbearing and may require slab thickening.

Truss Connections

* All tie-downs use 2/90x3.15 dia Skew Nails unless otherwise noted.

ZZ	79 x 2/Z Z nail
W4	23 x 1/WS4E Wind strap (4 nails per leg)
NC3	2 x 1/NPPC8 Purlin cleat
NC5	5 x 1/NPPC6 Purlin cleat
NC6	1 x 1/NPPC4 Purlin cleat
MG	105 x 1/MGL Multigrip (long)
NC9	4 x 2/NPPC8 Purlin cleat
NC4	1 x 2/NPPC6 Purlin cleat
FB	14 x 1/FB4590 Joist hanger
MG	2 x 2/MG Multigrips

All truss to truss connections use 3/90x3.15 Skew Nails unless otherwise shown

All jack trusses require a multigrip connector at the top & bottom chords when being supported by another truss, refer to the above diagram

All gable trusses require 2/90x3.15 skew nails connecting vertical webs to top plate unless otherwise shown

pryda solutions

Customer	: Williams Residence
Site Address	: Plymouth Road
	: New Plymouth

Roofing	: Corrugated Iron
Pitch	25.00 Deg.
Spacing	. 900
Design Wind Velocity	: 44.00 m/s (Ult)
Detailer	: <None>

Job Ref	q2355
Scale	
Level	

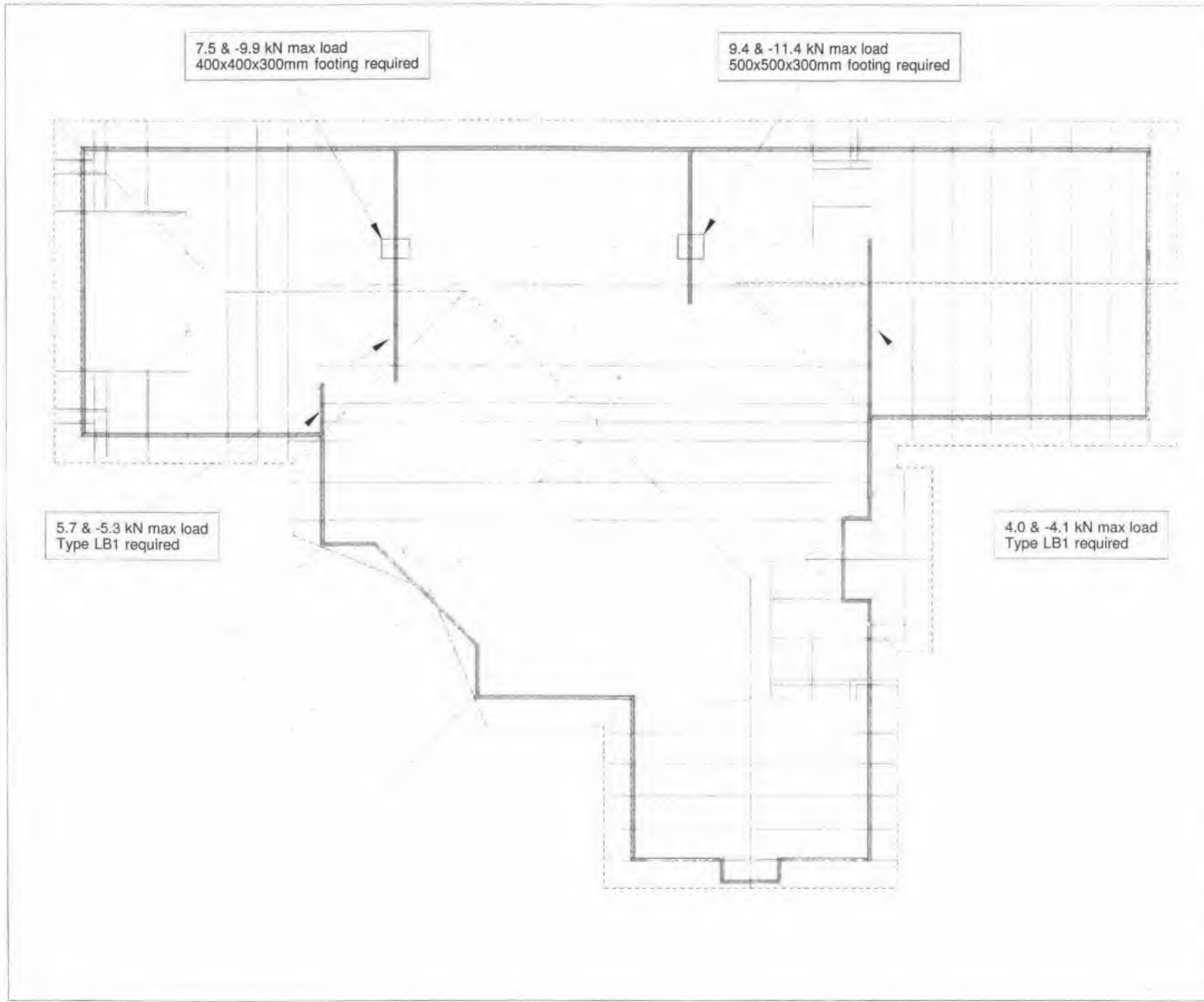

INTERNAL CONCRETE FOUNDATION SUPPORT REQUIREMENTS - 12KN

Consent Doc. Code LB1

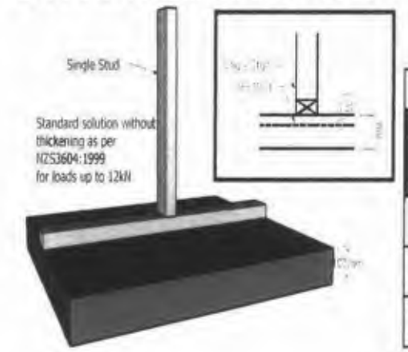

12kN load		MSG8	MSG6
HEIGHT m	Stud size	No.of studs under load	No.of studs under load
2.4	90 x 45	1	1
2.7	90 x 45	2	2
3	90 x 45	2	2

NPDC Approved
18 APR 2011

pryda solutions

Customer	: Williams Residence	Roofing	: Corrugated iron	Job Ref	q2355
Site Address	: Plymouth Road	Pitch	: 25.00 Deg.	Scale	
	: New Plymouth	Spacing	: 900	Level	
		Design Wind Velocity	: 44.00 m/s (Ult.)		
		Detailer	: <None>		

GENERAL

1. CONTRACTORS ARE REQUIRED TO COMPLY WITH THE BUILDING ACT 2004 AND THE HEALTH AND SAFETY IN EMPLOYMENT ACT 1992 INCLUDING ALL CURRENT AMENDMENTS, TOGETHER WITH ANY REASONABLE REQUIREMENT BY THE OWNER AND THE ENGINEER/DESIGNER/ARCHITECT.
2. NO BUILDING CONSTRUCTION SHALL COMMENCE UNTIL A BUILDING CONSENT HAS BEEN OBTAINED FROM THE TERRITORIAL AUTHORITY.
3. THE BUILDER SHALL ONLY WORK TO THE CONSENT DOCUMENTS APPROVED BY THE TERRITORIAL AUTHORITY.
4. CONTRACTOR SHALL LOCATE ALL EXISTING SERVICES BOTH ABOVE AND UNDER GROUND. ENSURE ALL SERVICES ARE PROPERLY REMOVED, RELOCATED, OR ADEQUATELY PROTECTED AS NECESSARY.
5. ALL DIMENSIONS ARE IN MILLIMETRES UNLESS OTHERWISE NOTED.
6. ALL FIGURED DIMENSIONS TAKE PRECEDENCE OVER SCALED DIMENSIONS.
7. C.O.S. = CHECK ON SITE.
8. COMPATIBILITY OF MATERIALS AND FIXINGS: ALL MATERIALS AND FIXINGS SHALL BE COMPATIBLE WITH OTHER MATERIALS IN CONTACT AND/OR SUBJECT TO WATER RUN-OFF. IF UNSURE, REFER TO NZ BUILDING CODE E2/AS1, TABLES 21 AND 22.

CONCRETE WORK

1. ALL CONCRETE WORK SHALL CONFORM TO NZS 3109: SPECIFICATION FOR CONCRETE CONSTRUCTION AND SHALL BE HIGH GRADE.
2. EXTEND FOUNDATIONS TO A MINIMUM OF 300mm INTO GOOD GROUND OR AS OTHERWISE SHOWN ON THE DRAWINGS.
3. MINIMUM CONCRETE COVER TO STEEL REINFORCEMENT SHALL BE:
   75mm WHEN CONCRETE IS PLACED DIRECTLY ON OR AGAINST THE GROUND;
   50mm IN ALL OTHER SITUATIONS WHERE THE CONCRETE IS PLACED IN FORMWORK
4. CONCRETE SHALL HAVE A MINIMUM COMPRESSIVE STRENGTH AT 28 DAYS OF: 25 MPa FOR REINFORCED CONCRETE IN SEA SPRAY ZONE;

REINFORCING

1. MILD STEEL PLAIN & DEFORMED REINFORCING BARS SHALL CONFORM TO AS/NZS 4671: STEEL REINFORCING MATERIALS.
2. ALL PLAIN (ROUND) BARS SHALL BE GRADE 300. ALL DEFORMED BARS NOMINATED AS 'D' SHALL BE GRADE 300 AND ALL DEFORMED BARS NOMINATED AS 'H' SHALL BE GRADE 500E, UNLESS NOTED OTHERWISE.
3. TAKE SPECIAL CARE TO ACHIEVE THE MINIMUM INSIDE DIAMETER OF BENDS AS SHOWN IN THE CHARTS BELOW. DO NOT ALLOW RE-BENDING OF GRADE 500E STEEL AND DO NOT CARRY OUT SITE WELDING, INCLUDING TACK WELDING.
4. REINFORCING LAP LENGTHS SHALL BE AS FOLLOWS UNLESS NOTED OTHERWISE:
   D12 – 600mm; H12 – 850mm;
   (OR ROUND BARS)
5. SPIRAL OR HOOPS REINFORCING TO HAVE STANDARD 90° HOOKS AT EACH END. SPIRALS TO TERMINATE WITH FULL HOOP LAP. ALTERNATIVELY, WITH ENGINEER'S APPROVAL, TERMINATION CAN CONSIST OF A 6mm FILLET LAP WELD x 10 d_b (BAR DIAMETERS) LONG.

STRUCTURAL STEELWORK

1. ALL STRUCTURAL STEEL WORK SHALL CONFORM TO NZS 3404: STEEL STRUCTURES STANDARD, AS 4100 & AS 3990 (INT).
2. ALL WELDS AS INDICATED BY STANDARD WELDING SYMBOLS. WHERE THE TYPE OF WELD IS NOT NOTED, WELD WITH A 6mm FILLET WELD ALL ROUND. ALL WELDS TO BE CATEGORY SP IN ACCORDANCE WITH AS/NZS 1554.1: STRUCTURAL STEEL WELDING – WELDING OF STEEL STRUCTURES.
3. GROUT UNDER BASEPLATES OF STEEL PORTAL LEGS, STEEL STANCHIONS AND STEEL POSTS WITH 15mm NON-SHRINK GROUT.
4. STEELWORK SHALL BE SANDBLASTED TO SWEDISH STANDARD SA 2 ½ AND ZINC SPRAY TO 200 MICRONS.

MINIMUM BENDS FOR MAIN STEEL

GRADE	Bar diameter, d_b (mm)	Minimum diameter of bend, d_i (mm)
300 or 500E	6 – 20	5 d_b
	25 – 40	6 d_b

MINIMUM BENDS FOR STIRRUPS & TIES

GRADE	Bar diameter, d_b (mm)	Minimum diameter of bend, d_i (mm)	
		Plain	Deformed
300 or 500E	6 – 20	2 d_b	4 d_b
	25	3 d_b	6 d_b

STANDARD HOOK LENGTHS:

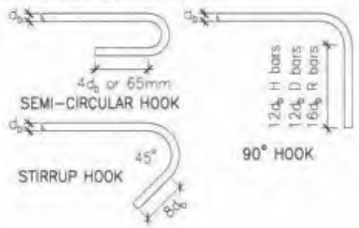

NPDC Approved
18 APR 2011

ISSUED FOR CONSENT
13th APRIL 2011

ISSUE	AMENDMENT	DATE	BY
0	CONSENT ISSUE	13.04.11	DGW

COPYRIGHT:
THIS DOCUMENT AND THE COPYRIGHT IN THIS DOCUMENT REMAIN THE PROPERTY OF TSE TARANAKI & ASSOCIATES LIMITED. THE CONTENTS OF THIS DOCUMENT MAY NOT BE REPRODUCED EITHER IN WHOLE OR IN PART BY ANY MEANS WHATSOEVER WITHOUT THE PRIOR WRITTEN CONSENT OF TSE TARANAKI & ASSOCIATES LIMITED.

CONTRACTORS TO:
VERIFY ALL DIMENSIONS AND CHECK ALL LEVELS ON SITE BEFORE COMMENCING ANY WORK; REFER TO FIGURED DIMENSIONS; REFER ANY DISCREPANCIES TO THE DRAWING OFFICE; CHECK THAT ALL WORKMANSHIP AND MATERIALS CONFORM WITH THE BUILDING ACT 2004 & THE NEW ZEALAND BUILDING CODE.

Drawn	DG WHITMORE	13.04.11
Design	F. KERSLAKE	APRIL 2011
Checked		
Approved		

Tse
Tse Taranaki & Associates Limited
STRUCTURAL & CIVIL ENGINEERS
PROJECT MANAGERS
148 POWDERHAM STREET – PO BOX 237
NEW PLYMOUTH – NEW ZEALAND
TEL 64.6.7588390 – FAX 64.6.7579404
EMAIL: tse@tsetaranaki.co.nz

TITLE
PERRETT PROPERTIES LTD
699 PLYMOUTH ROAD - OMATA

NEW RESIDENCE
PORTAL DESIGN DETAILS

SHEET CONTENTS
CONSTRUCTION NOTES

A1 SCALE	
A2 SCALE	
A3 SCALE	

ISSUE	SHEET No.
0	S0.01
JOB No. 3951-500	

DO NOT SCALE
IF IN DOUBT ASK
CHECK ALL DIMENSIONS
ORIGINAL SIZE = A3

S0.01 - CONSTRUCTION NOTES - Date: Wednesday 13th April 2011 - Time: 21:1pm

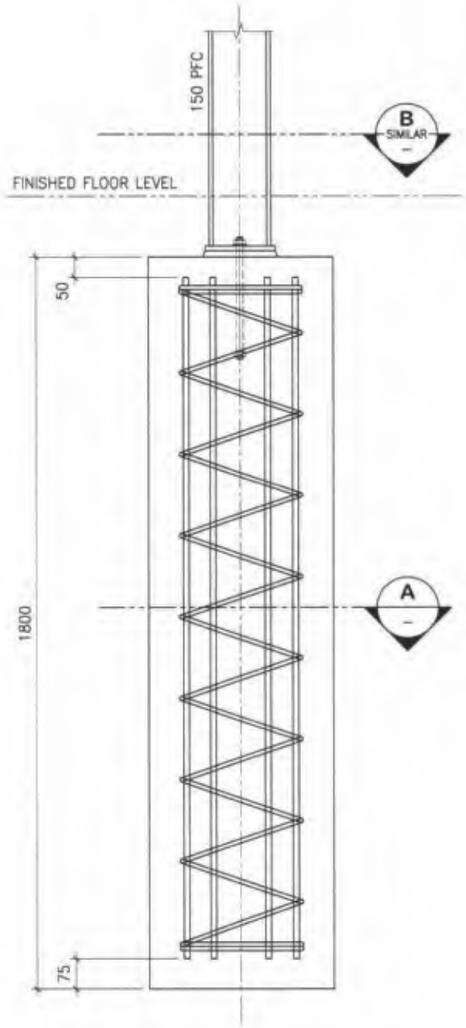

1 S2.01 **FOUNDATION PILE**
SCALE 1:15

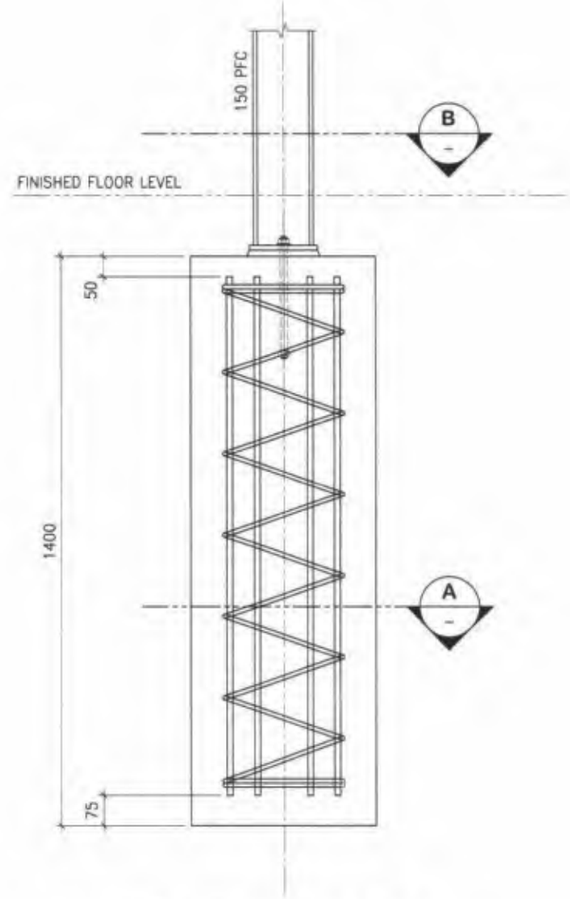

2 S2.01 **FOUNDATION PILE**
SCALE 1:15

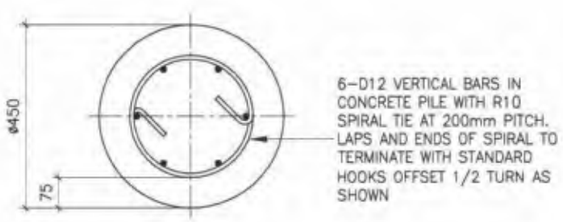

A – **SECTION**
SCALE 1:15

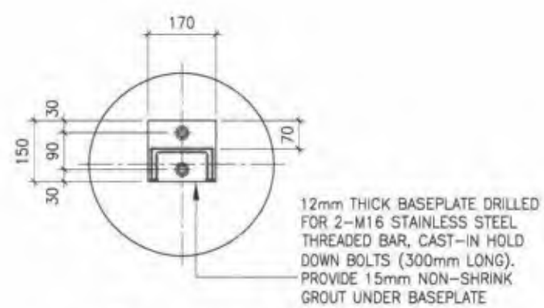

B – **SECTION**
SCALE 1:15

ISSUED FOR CONSENT
13th APRIL 2011

NPDC Accepted
18 APR 2011

ISSUE	AMENDMENT	DATE	BY
0	CONSENT ISSUE	13.04.11	DGW

COPYRIGHT:
THIS DOCUMENT AND THE COPYRIGHT IN THIS DOCUMENT REMAIN THE PROPERTY OF TSE TARANAKI & ASSOCIATES LIMITED. THE CONTENTS OF THIS DOCUMENT MAY NOT BE REPRODUCED EITHER IN WHOLE OR IN PART BY ANY MEANS WHATSOEVER WITHOUT THE PRIOR WRITTEN CONSENT OF TSE TARANAKI & ASSOCIATES LIMITED.

CONTRACTORS TO:
VERIFY ALL DIMENSIONS AND CHECK ALL LEVELS ON SITE BEFORE COMMENCING ANY WORK; REFER TO FIGURED DIMENSIONS; REFER ANY DISCREPANCIES TO THE DRAWING OFFICE; CHECK THAT ALL WORKMANSHIP AND MATERIALS CONFORM WITH THE BUILDING ACT 2004 & THE NEW ZEALAND BUILDING CODE.

Drawn	DG WHITMORE	13.04.11
Design	F. KERSLAKE	APRIL 2011
Checked		
Approved		

Tse Taranaki & Associates Limited
STRUCTURAL & CIVIL ENGINEERS
PROJECT MANAGERS
148 POWDERHAM STREET – PO BOX 237
NEW PLYMOUTH – NEW ZEALAND
TEL 64.6.7588390 – FAX 64.6.7579404
EMAIL: tse@tsetaranaki.co.nz

TITLE
PERRETT PROPERTIES LTD
699 PLYMOUTH ROAD - OMATA

NEW RESIDENCE
PORTAL DESIGN DETAILS

SHEET CONTENTS
FOUNDATION DETAILS

A1 SCALE	
A2 SCALE	
A3 SCALE	1:15

ISSUE: 0
JOB No. 3951-500
SHEET No. S3.01

DO NOT SCALE
IF IN DOUBT ASK
CHECK ALL DIMENSIONS
ORIGINAL SIZE = A3

S3.01 - FOUNDATION DETAILS - Date: Wednesday 13th. April 2011 - Time: 21:1pm

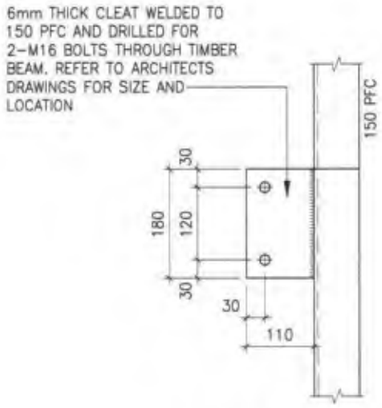

A SECTION
SCALE 1:10

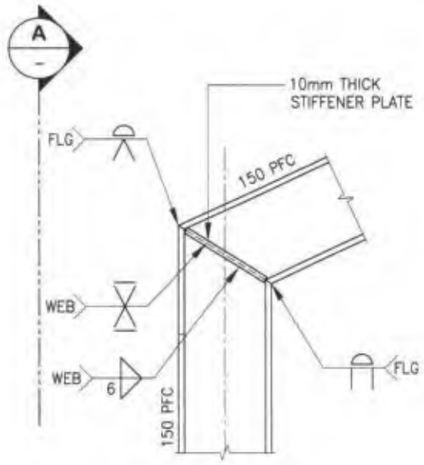

3 S2.01 KNEE DETAIL
SCALE 1:10

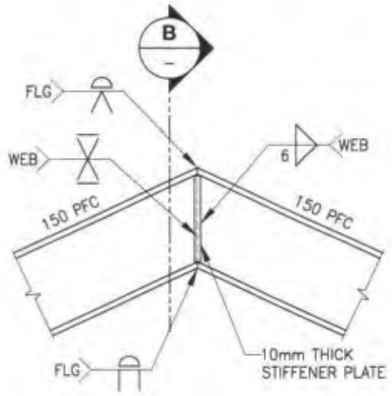

4 S2.01 APEX DETAIL
SCALE 1:10

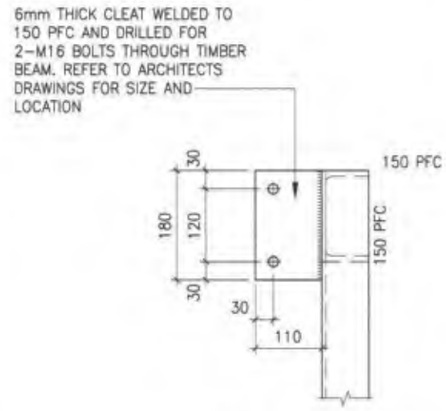

B SECTION
SCALE 1:10

APEC Approved
13 APR 2011

ISSUE	AMENDMENT	DATE	BY
0	CONSENT ISSUE	13.04.11	DGW

COPYRIGHT:
THIS DOCUMENT AND THE COPYRIGHT IN THIS DOCUMENT REMAIN THE PROPERTY OF TSE TARANAKI & ASSOCIATES LIMITED. THE CONTENTS OF THIS DOCUMENT MAY NOT BE REPRODUCED EITHER IN WHOLE OR IN PART BY ANY MEANS WHATSOEVER WITHOUT THE PRIOR WRITTEN CONSENT OF TSE TARANAKI & ASSOCIATES LIMITED.

CONTRACTORS TO:
VERIFY ALL DIMENSIONS AND CHECK ALL LEVELS ON SITE BEFORE COMMENCING ANY WORK; REFER TO FIGURED DIMENSIONS; REFER ANY DISCREPANCIES TO THE DRAWING OFFICE; CHECK THAT ALL WORKMANSHIP AND MATERIALS CONFORM WITH THE BUILDING ACT 2004 & THE NEW ZEALAND BUILDING CODE.

Drawn	DG WHITMORE	13.04.11
Design	F. KERSLAKE	APRIL 2011
Checked		
Approved		

Tse Taranaki & Associates Limited
STRUCTURAL & CIVIL ENGINEERS
PROJECT MANAGERS
148 POWDERHAM STREET – PO BOX 237
NEW PLYMOUTH – NEW ZEALAND
TEL 64.6.7588390 – FAX 64.6.7579404
EMAIL: tse@tsetaranaki.co.nz

TITLE
PERRETT PROPERTIES LTD
699 PLYMOUTH ROAD - OMATA

NEW RESIDENCE
PORTAL DESIGN DETAILS

SHEET CONTENTS
STEELWORK DETAILS

A1 SCALE	
A2 SCALE	
A3 SCALE	1:10

ISSUE 0
JOB No. 3951-500
SHEET No. S4.01

ISSUED FOR CONSENT
13th APRIL 2011

DO NOT SCALE
IF IN DOUBT ASK
CHECK ALL DIMENSIONS
ORIGINAL SIZE = A3

S4.01 - STEELWORK DETAILS - Date: Wednesday 13th April 2011 - Time: 21:1pm

R2.2
3.2c
Mc 16.18 %

NPDC Approved
18 APR 2011

Truss Fixings

- X - LUMBERLOK JH47x90 Joist Hanger 23
- Z - LUMBERLOK JH47x120 Joist Hanger
- P - LUMBERLOK JH47x190 Joist Hanger
- E - LUMBERLOK JH95x165 Joist Hanger
- O - Pair of LUMBERLOK CT200 Ceiling Ties 14pr
- H - Pair of LUMBERLOK CT200 Ceiling Ties and 16kN Truss to top Plate set = 27kN 4sets
- M - Pair of LUMBERLOK Multi Grips 6pr
- NP - LUMBERLOK Nailon Plate 2
- N - LUMBERLOK N21 Diagonal Cleat
- K - LUMBERLOK TTP 16kN Truss to Top Plate set 2pr
- G - LUMBERLOK TTP 9kN Truss to Top Plate set
- D - Pair of LUMBERLOK Wire Dogs 77pr
- S - Pair of LUMBERLOK SPH140 Split Hangers 2pr

35mm Ecm valley screws

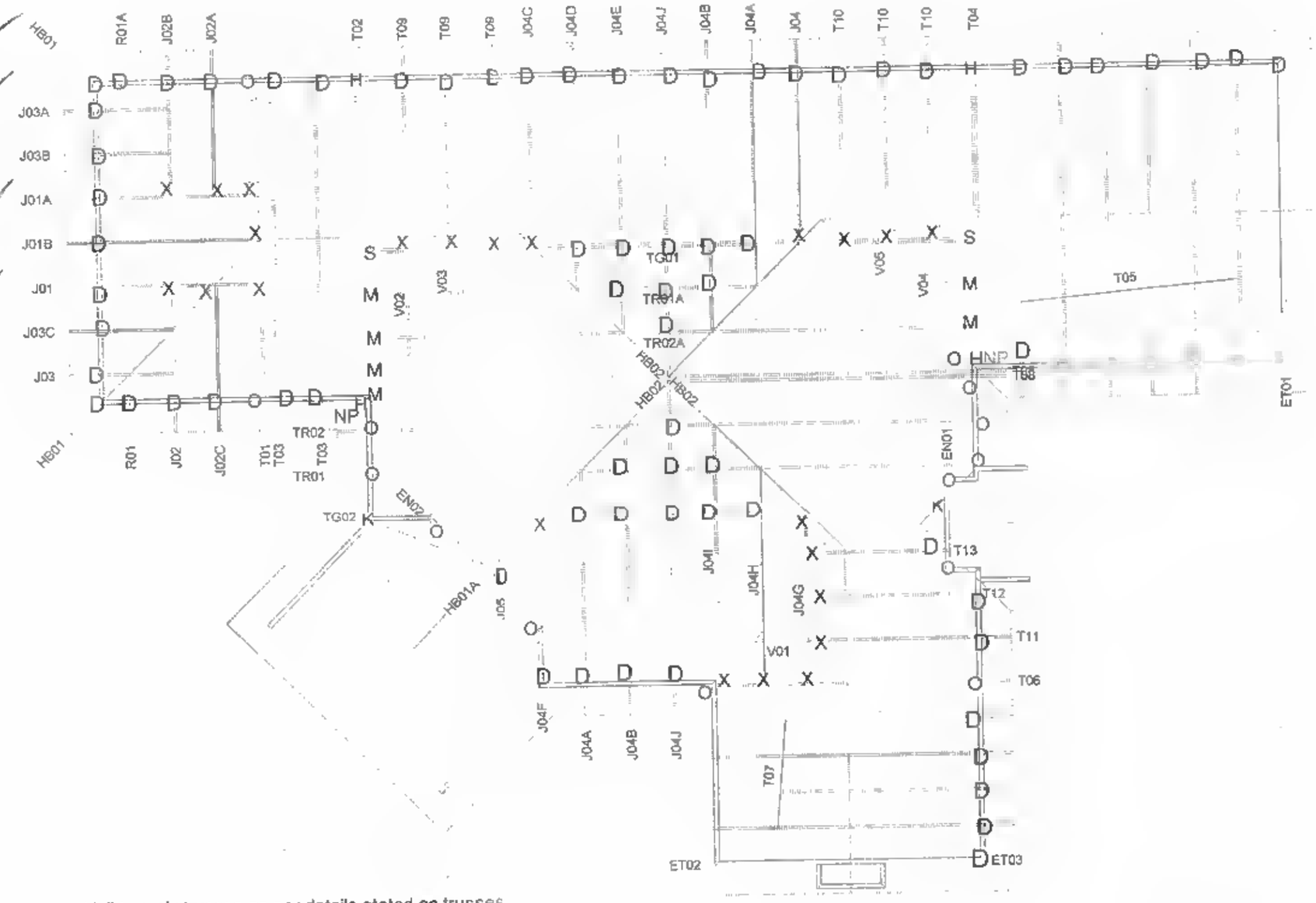

Nail two ply trusses as per details stated on trusses

NOTES:

READ PRE-CUT PLANS IN CONJUNCTION WITH ARCHITECTURAL PLANS

TimberCo Ltd WILL NOT ACCEPT ANY CHARGES FOR REMEDIAL WORK UNLESS WRITTEN AUTHORISATION IS OBTAINED FROM TimberCo Ltd

A4

TIMBERCO
7 Sunley Street New Plymouth
PH (06) 7534393
FAX (06) 7534394

Site Address
D & H WILLIAMS
LT 1 PLYMOUTH RD
OAKURA

Sheet Title
Truss Layout

Date 30 Apr 2012
Scale NTS
Drawn Wayne Silby
System MiTek 20/20

Job Details:

Roof Pitch	: 25.00deg
Roof Material	: Light
Ceiling Material	: Standard
Wind Zone	: High
Roof Snow Load	: 0.000kPa
Truss Centres	: 900mm
Roof Live Load	: 0.250kPa
Floor Live Load	:
Wind Speed	: 44m/s
Overhang	: 600mm

PrimeCad v4.6.0.132

MiTek

Job Title
WILLIA

Sheet

Revision Number

Plym.

Telephone: Phone 06

Address: LOT 1 PLYM PTH RD
OAKUPA

Building Consent No.:

Scale: 1:119 | Date: 30/05/2011 | Drawn By: Wayne S.

Wind Zone: High
Wind Area: 1200 mm
TC Restraints: Light
Roof Material: 0.250 kPa
Roof Live Load: 25.000 deg
Roof Pitch:

Snow Altitude: 0 m
Design Wind Speed: 44.0 m/s
BC Restraints: 400 mm
Ceiling Material: Standard
Snow Load: 0.000 kPa
Truss Centres: 900 mm

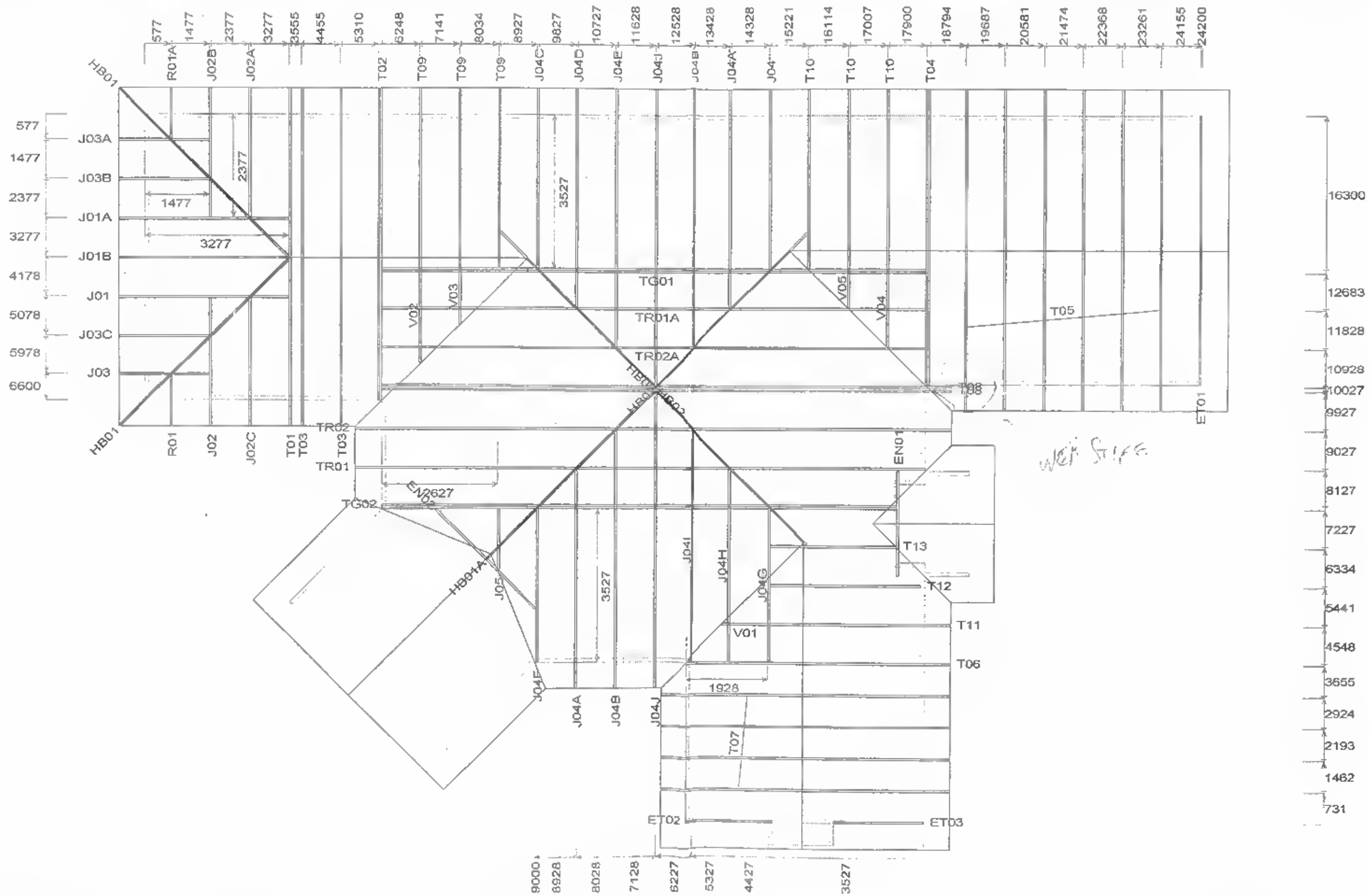

SHEET NO	FILE NO
1/4	3951/500

CALCS BY	JOB NAME
F KERSLAKE	D & H WILLIAMS LOT 1 PLYMOUTH RD

DATE 2/4/11

TSE TARANAKI & ASSOCIATES LIMITED

STRUCTURAL & CIVIL ENGINEERS
PROJECT MANAGERS

Graphic Explosion - 17322

(A) DESCRIPTION

NEW SINGLE STOREY RESIDENCE AT 1200 PLYMOUTH RD ON AN ELEVATED SITE NEXT TO PLYMOUTH RD

OPEN VIEW TO NORTH AND EAST

LIGHT WT ROOF AND CLADDING

CONSTRUCTION TYPICALLY TO NZS3604 WITH EXCEPTION OF PORTICO AND MAIN ENTRY CANOPIES WHICH ARE SUPPORTED BY A STEEL PORTAL FRAME.

(B) SCOPE

- STRUCTURAL STEEL DESIGN AND FOUNDATIONS
- LINERA CLADDING AROUND PORTAL LEGS.

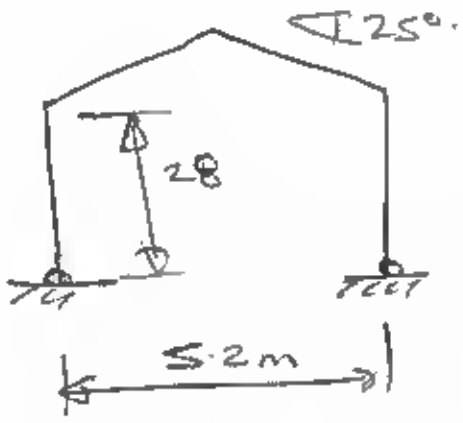

(C) LOADS

a) $W_G = 0.45$ LINED ROOF.

b) $W_Q = 0.25$ Kpa.

c) WIND 1170.

$V = 45 ms^{-1} \Rightarrow q = (0.6)[(1.35)(0.91)(45)]^2 = 1.83$

$V_{25} = 37.$ $q_{25} = 0.6[(1.35)(0.91)37]^2 = 1.24$

$M(z/CAT) = 0.91$

SHADOW ZONE

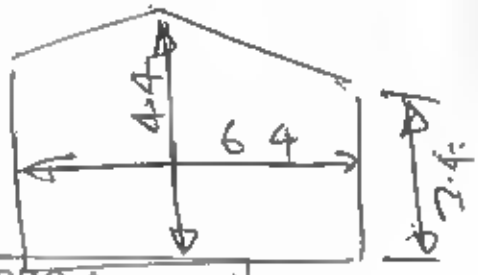

NPDC Approved
PLAN
18 APR 2011
$M_h = 1.16$
$M_{RC} = 1.35$

SHEET NO	FILE NO
2/4	3951/500

CALCS BY	JOB NAME
F. KERSVACS	D & H WILLIAMS LOT 1 PLYMOUTH RD

DATE 2/4/11

TSE TARANAKI & ASSOCIATES LIMITED

STRUCTURAL & CIVIL ENGINEERS
PROJECT MANAGERS

Graphix Exploreon - 17322

FREE ROOFS

WIND.

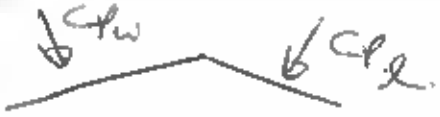

$C_{pw} = -0.3 \uparrow$
$0.6 \downarrow$ UMBRELLAS

C_{pl} $-0.65 \uparrow$

OPEN CANOPY

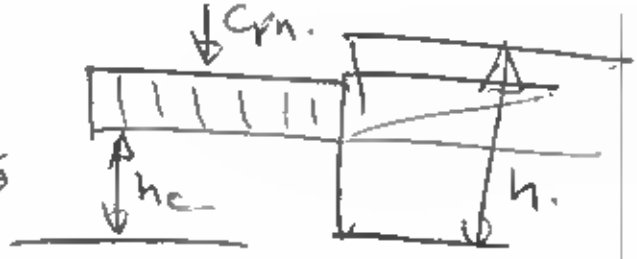

$C_{pn} = -1.5 \uparrow$
$= 0.4 \downarrow$

$h_c = 3.2$ AVERAGE

$h = 3.8m.$

$h_c/h = 0.84.$

$w_c = 6.4.$

$\frac{h_c}{w_c} = \frac{3.2}{6.4} = 0.50$

$-0.3 - 0.2(0.5) = 0.4$

RAKING CEILING FRAMED AS PER NZS 3604.

$W_{UPLIFT} = (4.0)(0.6)(1.5)1.83 = 6.6kN$

$W_{SLS} = (4.0)(0.6)(1.5)(1.29) = 4.5kN$

d) EQ.

$C(T) = C_h(T) Z R N(T,D)$

$C_h(T) = (3.0)(0.18)(1.0) = 0.54$

$K_p = \frac{(2-1)(0.4)}{0.7} + 1 = 1.57.$

$C_d(T_1) = \frac{0.54(0.79)}{1.57} = 0.24$

SOILTYPE D.
$T < 0.4$
$\mu = 2$
$S_p = 0.7$
$Z = 0.18$
$R = 1.0$
$K_s = 0.25.$
$N(T,D) = 1.0$

NPDC Approved
18 APR 2011

$W_c = (4.4)(0.6)(6.4)(0.45) = 7.6kN + FRAME = 1.6 = 9.2$

$\Rightarrow$ LATERAL LOAD $= (9.2)(0.24) = 2.2kN.$

SHEET NO	FILE NO
3/4	3951/500.
CALCS BY	JOB NAME
R.K.	D & H WILLIAMS LOT 1 PLYMOUTH RD.
DATE	
2/4/11	

TSE TARANAKI & ASSOCIATES LIMITED

STRUCTURAL & CIVIL ENGINEERS
PROJECT MANAGERS

Graphic Explosion - 17322

$W_G = (0.6)(4.9)(0.45) + 0.2 = \underline{1.3\,kN/m^2}$

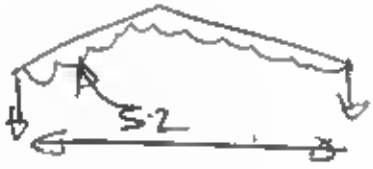

$W_u = 0.9(1.3) - 6.6 = 5.4$

$0.9G + W_u$

RAFTER MAX

$\Rightarrow M^* = \frac{(5.2)^2 5.4}{8} = \underline{18.2\,kNm}$

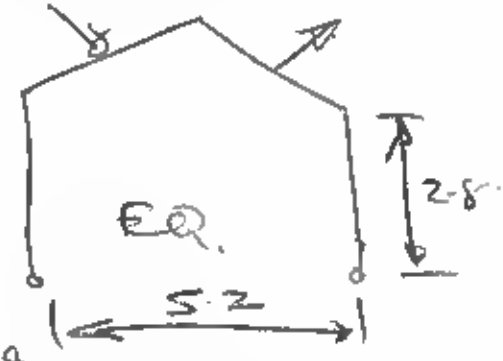

$I > \frac{5}{384}\frac{(3.2\,kN/m)(5.2)^4 200}{200 \times 10^9} = \underline{586\,cm^4}$

$W_S = 1.3 - 4.5 = 3.2\,kN/m$

$UPLIFT = \frac{(5.4)(5.2)}{2} = 14.0$

LEG BM

$M^*_{LEG\ EQ.} = \frac{(2.2\,kN)(2.8)}{2} = 3.1\,kNm/LEG$

WIND LATERAL $= \left(\frac{6.5}{\cos 25}\right)(0.65)(1.83\,kPa)\sin 25$

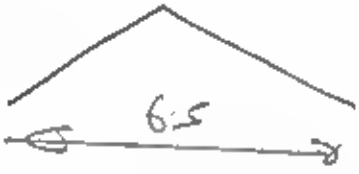

$= 3.6\,kN$

$M^*_{WIND} = \frac{(3.6)(2.8)}{2} = 5.0\,kNm/LEG$

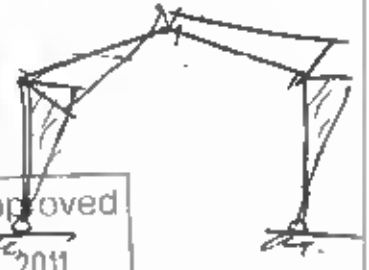

$\Rightarrow$ TRY 150PFC $I = 834$, $Z = 111$ $> 586 \Rightarrow$ OK

$\phi M_b = 21.6\,kNm$ $\quad l_{eff} = 3.0$

$> 5.0 \Rightarrow$ OK

NPDC Approved
18 APR 2011
ACTUALLY FULLY RESTRAINED

SHEET NO	FILE NO
4/4	3951/500
CALCS BY: FK	JOB NAME: D & H WILLIAM. LOT 1 PLYMOUTH RD
DATE: 2/4/11	

TSE TARANAKI & ASSOCIATES LIMITED

STRUCTURAL & CIVIL ENGINEERS
PROJECT MANAGERS

Graphix Explosion - 17322

USE 150 PFC MOMENT FRAME

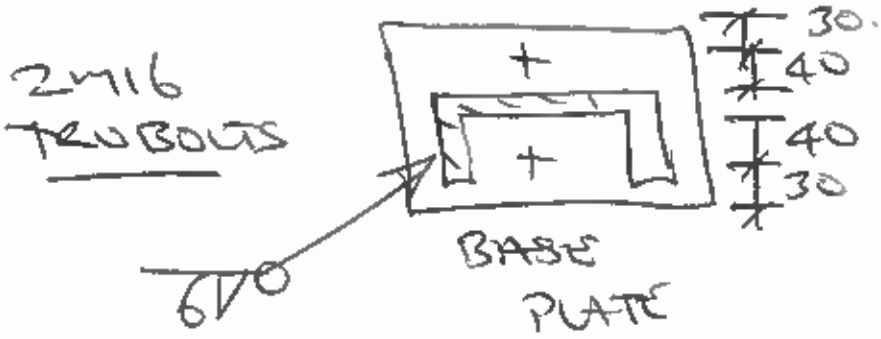

FOOTING.

UPLIFT = 14KN.

TRY 450 DIA PILE

$\Rightarrow$ DEPTH = $\dfrac{14KN}{24\left(\frac{0.45}{2}\right)^2\pi}$

= 2.1m

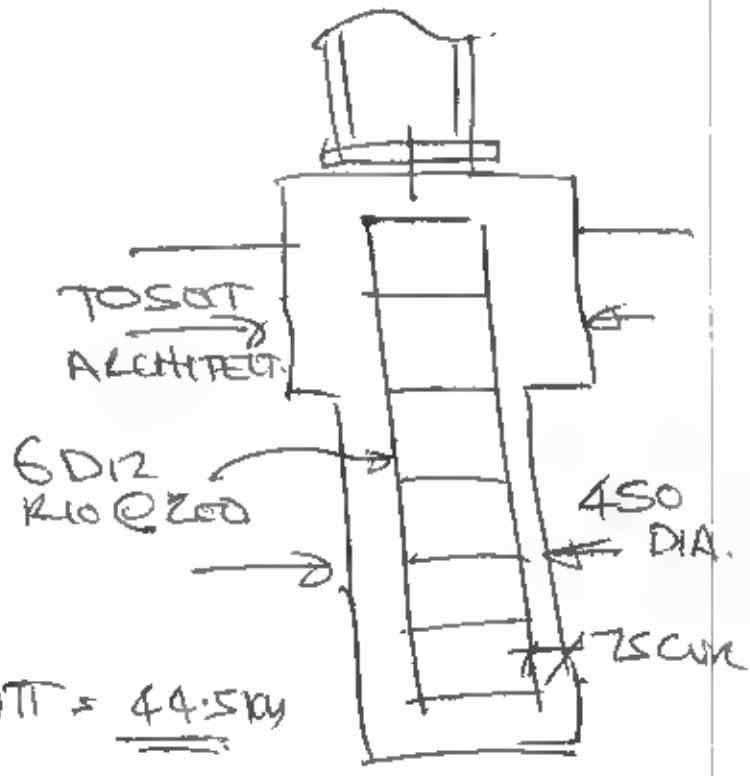

SKIN FRICTION.

$= (17.5KN)(1.5)(0.45)(1.2)\pi = 44.5KN$

450ϕ DEEP.

$\Rightarrow$ F.O.S = $\dfrac{44.5}{14}$ = 3.2 $\Rightarrow$ OK

NPDC Approved
18 APR 2011

$\Rightarrow$ USE 1.8 DEEP X 450 DIA PILE
6 D12 R10 @ 600CRS.

148 POWDERHAM STREET, P.O. BOX 237, NEW PLYMOUTH. TEL (06) 758-8390 FAX (06) 757-9404

GIB® EzyBrace™ FP for GIB® EzyBrace™ Systems, 2009

GIB® Wall Bracing Calculation Sheet A — single storey — V03/09

Job Details

Name	WILLIAMS
Street and Number	PLYMOUTH ROAD
Lot and DP Number	LOT 1
City/Town/District	NEW PLYMOUTH
Designer	TOM HANSEN
Company Name	WILLIAMS
Date	3/12/2010

BRANZ Appraised
Appraisal No 284 (2008)

Select GIB® Lining Option: 10 mm GIB® Plasterboard

Building Specification

Number of storeys	single		
Floor Loading	2kPa		
Foundation Type	slab		
		Single Floor	**Complete Single Floor Column only**
Cladding Weight		light	
Roof Weight		light	
Room in Roof Space		no	
Roof Pitch (degrees)		25	15
Roof height above eaves (m)		3.4	1.0
Building height to apex (m)		5.9	
Ground to lower floor level (m)		0.2	
			3.0
Stud Height (m)		2.6	2.4
Building Length (m)		24.2	10.0
Building Width (m)		16.8	10.0
Building Plan Area (m2)		243	200

Building Location

Wind Zone	*High*	**Earthquake Zone**
Select by Building Consent Authority Map		A
or Preference	High	
Region	Preference selected	*Consult GIB® EzyBrace™ Systems, 2009*
Terrain	Preference selected	*for Wind Zone definitions*
Exposure	Preference selected	
Topography	Preference selected	

NPDC Approved
19 APR 2011

Bracing Units required for Wind

Demand W (BU)		Walls single
along	slab	1333
across	slab	2332

Bracing Units required for Earthquake

Demand along / across E (BU)		Walls single
	slab	841

©Winstone Wallboards Limited, 1999-2009. All rights reserved.

WILLIAMS TOM HANSEN

GIB® EzyBrace™ FP for GIB® EzyBrace™ Systems, 2009

GIB

GIB® Wall Bracing Calculation Sheet B — Single or Upper Walls Across — V03/09

Across

Bracing Line		Bracing Elements provided						Wind	Earthq.
1	2	3	4	6	5	7	8	9W	10EQ
Line Label	Minimum BUs Req/Ach	Bracing Element No.	Available Wall Length L (m)	Angle to Bracing line (degrees)	Element Height H (m)	Bracing Type	Supplier	BUs Achieved	BUs Achieved
M	100	1	3.3		2.55	GS1(10)	GIB®	214	171
	OK	2	1		2.55	GS1(10)	GIB®	64	52
line totals		3							
W	278	4							
EQ	223	5							
N	100	1	2.3		2.55	GS2(10)	GIB®	195	173
	OK	2	1.2		2.55	GS2(10)	GIB®	85	79
line totals		3							
W	280	4							
EQ	252	5							
O	100	1	2.4		2.55	GS2(10)	GIB®	203	181
	OK	2	0.6		2.55	GS1(10)	GIB®	36	31
line totals		3	1.2		2.55	GS1(10)	GIB®	78	62
W	318	4							
EQ	274	5							
P	100	1	3.4		2.55	GS1(10)	GIB®	221	176
	OK	2	3.6		2.55	GS2(10)	GIB®	305	271
line totals		3	0.6		2.55	GS1(10)	GIB®	36	31
W	599	4	0.6		2.55	GS1(10)	GIB®	36	31
EQ	509	5							
Q	100	1	2		2.55	GS2(10)	GIB®	169	151
	OK	2	1.2		2.55	GS2(10)	GIB®	85	79
line totals		3	1.6		2.55	GS2(10)	GIB®	128	115
W	590	4	1.6		2.55	GS1(10)	GIB®	104	83
EQ	511	5	1.6		2.55	GS1(10)	GIB®	104	83
R	100	1	1.8		2.55	GS1(10)	GIB®	117	93
	OK	2	1.8		2.55	BL1(10)	GIB®	235	169
line totals		3							
W	352	4							
EQ	263	5							
S	enter	1							
		2							
line totals		3							
W		4							
EQ		5							
T	enter	1							
		2							
line totals		3							
W		4							
EQ		5							

NPDC Approved
18 APR 2011

©Winstone Wallboards Limited, 1999-2009. All rights reserved.

						Wind	Earthq
Totals Achieved	Achieved/Demand	W	104%	EQ	241%	2416	2031
Concrete Slab						OK	OK
Totals Required (from Demand)						2332	841

Wall Bracing Systems
For full construction details see technical literature

Single or Upper Walls Across

Supplier	System	Minimum Length (m)	BUs W/m	BUs EQ/m
	none			
GIB®	GS1(10)	0.4		
GIB®	GS2(10)	0.6		
GIB®	BL1(10)	0.4		
GIB®	BLP	0.4		
GIB®	BLG	0.6		
Custom	Custom			
Custom	Custom			
Custom	Custom			
Custom	Custom			
Custom	Custom			
Custom	Custom			
Custom	Custom			
Custom	Custom			
Custom	Custom			
Custom	Custom			
Custom	Custom			
Custom	Custom			

BRANZ Appraised
Appraisal No 284 (2004)

©Winstone Wallboards Limited, 1999-2009. All rights reserved.

Concrete Slab

A limit of 150 BU/m applies to solid concrete slabs

Ensure not to enter custom elements with ratings higher than 150 BU/m

Distribution (NZS3604:1999 minimum values)		
Internal wall bracing lines	70	BU
External wall bracing lines	10 x L(m)	BU
Lines supporting diaphragms	100	BU
Recommended distribution check (75% x D/n)		
No bracing line less than	292	BU

NPDC Approved
18 APR 2011

WILLIAMS TOM HANSEN

GIB® EzyBrace™ FP for GIB® EzyBrace™ Systems, 2009

GIB

GIB® Wall Bracing Calculation Sheet B — Single or Upper Walls Along — V03/09

Along

Bracing Line		Bracing Elements provided						Wind	Earthq.
1	2	3	4	6	5	7	8	9W	10EQ
Line Label	Minimum BUs Req/Ach	Bracing Element No	Available Wall Length L (m)	Angle to Bracing line (degrees)	Element Height H (m)	Bracing Type	Supplier	BUs Achieved	BUs Achieved
A	242	1	1.7		2.55	GS1(10)	GIB®	110	88
	OK	2	0.6		2.55	GS1(10)	GIB®	36	31
line totals		3	0.9		2.55	GS1(10)	GIB®	57	47
W	320	4	1.8		2.55	GS1(10)	GIB®	117	93
EQ	259	5							
B	100	1	1.2		2.55	GS1(10)	GIB®	78	62
	OK	2	1.2		2.55	GS1(10)	GIB®	78	62
line totals		3	2.4		2.55	GS1(10)	GIB®	156	124
W	524	4	2.4		2.55	GS1(10)	GIB®	156	124
EQ	419	5	0.9		2.55	GS1(10)	GIB®	57	47
C	100	1	1.2		2.55	GS1(10)	GIB®	78	62
	OK	2	2.9		2.55	GS1(10)	GIB®	188	150
line totals		3							
W	266	4							
EQ	212	5							
D	100	1	0.6		2.55	GS1(10)	GIB®	36	31
	OK	2	2.9		2.55	GS1(10)	GIB®	188	150
line totals		3							
W	225	4							
EQ	181	5							
E	100	1	0.6		2.55	GS1(10)	GIB®	36	31
	OK	2	0.6		2.55	GS1(10)	GIB®	36	31
line totals		3	0.6		2.55	GS1(10)	GIB®	36	31
W	146	4	0.6		2.55	GS1(10)	GIB®	36	31
EQ	124	5							
F	enter	1							
		2							
line totals		3							
W		4							
EQ		5							
G	enter	1							
		2							
line totals		3							
W		4							
EQ		5							
H	enter	1							
		2							
line totals		3							
W		4							
EQ		5							

©Winstone Wallboards Limited, 1999-2009. All rights reserved.

NPDC Approved 10 APR 2011

						Wind	Earthq.
Totals Achieved	Achieved/Demand	W	111%	EQ	142%	1481	1196
Concrete Slab						OK	OK
Totals Required (from Demand)						1333	841

Wall Bracing Systems
For full construction details see technical literature

Single or Upper Walls Along

Supplier	System	Minimum Length (m)	BUs W/m	BUs EQ/m
	none			
GIB®	GS1(10)	0.4		
GIB®	GS2(10)	0.6		
GIB®	BL1(10)	0.4		
GIB®	BLP	0.4		
GIB®	BLG	0.6		
Custom	Custom			
Custom	Custom			
Custom	Custom			
Custom	Custom			
Custom	Custom			
Custom	Custom			
Custom	Custom			
Custom	Custom			
Custom	Custom			
Custom	Custom			
Custom	Custom			
Custom	Custom			

BRANZ Appraised
Appraisal No 284 (2009)

©Winstone Wallboards Limited, 1999-2009. All rights reserved.

Concrete Slab

A limit of 150 BU/m applies to solid concrete slabs

Ensure not to enter custom elements with ratings higher than 150 BU/m

Distribution (NZS3604:1999 minimum values)		
Internal wall bracing lines	70	BU
External wall bracing lines	10 x L(m)	BU
Lines supporting diaphragms	100	BU
Recommended distribution check (75% x D/n)		
No bracing line less than	200	BU

NPDC Approved
18 APR 2011

THESE PLANS HAVE BEEN

SUPERSEDED

REPLACEMENT PLANS WILL BE IN THE APPROVED OFFICE COPY.

BC: 111168 ADDRESS: 699 Plymouth Rd

Amendment No & Date of Amendments that these superseded plans relates to are:

1. AMENDMENT
2. 02 060612 AMENDMENT
3. 03 161112
4.
5.
6.
7.
8.
9.
10.

THESE ARE TO BE **KEPT AND SCANNED** AT THE END OF THE PROJECT FOR FUTURE REFERENCE

DRAWING REGISTER

DRAWING DESCRIPTION	SHEET	2011 13.04
COVER SHEET AND DRAWING REGISTER (THIS SHEET)	S0.00	0
CONSTRUCTION NOTES	S0.01	0
LOCATION PLAN	S1.01	0
FRAME ELEVATIONS	S2.01	0
FOUNDATION DETAILS	S3.01	0
STEELWORK DETAILS	S4.01	0
ISSUED FOR CONSENT		✓

DISTRIBUTION

OWNER		✓
CONTRACTOR		
TERRITORIAL AUTHORITY		
CONSULTANT		

PERRETT PROPERTIES LIMITED
699 PLYMOUTH ROAD OMATA

NEW RESIDENCE
PORTAL DESIGN DETAILS

APRIL 2011
JOB No. 3951-500

CONSENT ISSUE

SEE AMENDMENT
Dated: 14 + 6/6/12.

NPDC Approved
18 APR 2011

Tse Taranaki & Associates Limited
STRUCTURAL & CIVIL ENGINEERS
PROJECT MANAGERS
148 POWDERHAM STREET – PO BOX 237
NEW PLYMOUTH – NEW ZEALAND
TEL 64.6.7588390 – FAX 64.6.7579404
EMAIL: tse@tsetaranaki.co.nz

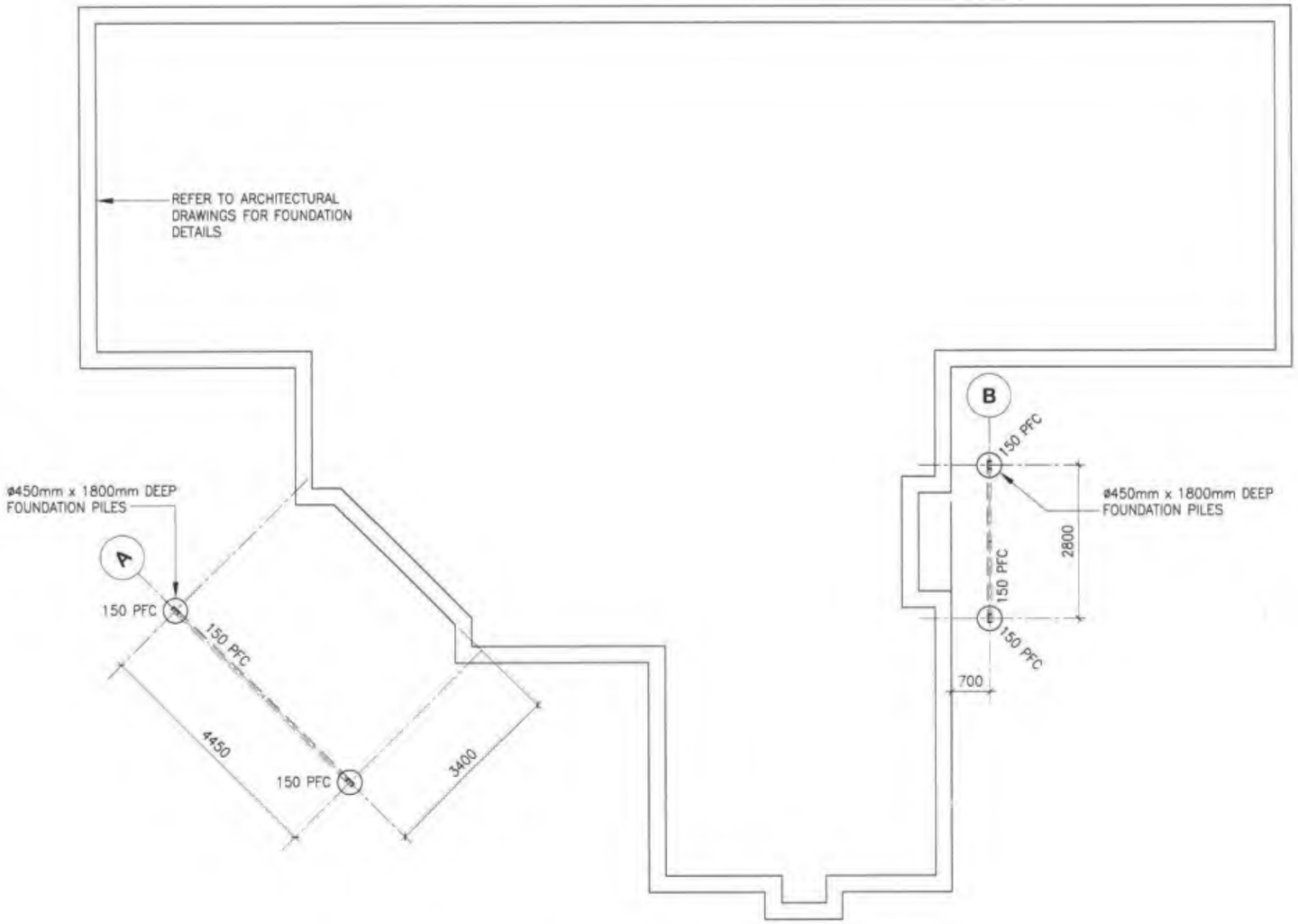

FOUNDATION PLAN

SCALE 1:100

ISSUED FOR CONSENT
13th APRIL 2011

NPDC Approved
18 APR 2011

ISSUE	AMENDMENT	DATE	BY
0	CONSENT ISSUE	13.04.11	DGW

COPYRIGHT:
THIS DOCUMENT AND THE COPYRIGHT IN THIS DOCUMENT REMAIN THE PROPERTY OF TSE TARANAKI & ASSOCIATES LIMITED. THE CONTENTS OF THIS DOCUMENT MAY NOT BE REPRODUCED EITHER IN WHOLE OR IN PART BY ANY MEANS WHATSOEVER WITHOUT THE PRIOR WRITTEN CONSENT OF TSE TARANAKI & ASSOCIATES LIMITED.

CONTRACTORS TO:
VERIFY ALL DIMENSIONS AND CHECK ALL LEVELS ON SITE BEFORE COMMENCING ANY WORK; REFER TO FIGURED DIMENSIONS; REFER ANY DISCREPANCIES TO THE DRAWING OFFICE; CHECK THAT ALL WORKMANSHIP AND MATERIALS CONFORM WITH THE BUILDING ACT 2004 & THE NEW ZEALAND BUILDING CODE.

Drawn	DG WHITMORE	13.04.11
Design	F. KERSLAKE	APRIL 2011
Checked		
Approved		

Tse Taranaki & Associates Limited
STRUCTURAL & CIVIL ENGINEERS
PROJECT MANAGERS
148 POWDERHAM STREET – PO BOX 237
NEW PLYMOUTH – NEW ZEALAND
TEL 64.6.7588390 – FAX 64.6.7579404
EMAIL: tse@tseteranaki.co.nz

TITLE
PERRETT PROPERTIES LTD
699 PLYMOUTH ROAD - OMATA

NEW RESIDENCE
PORTAL DESIGN DETAILS

SHEET CONTENTS
LOCATION PLAN

A1 SCALE	
A2 SCALE	
A3 SCALE	1:100

ISSUE	SHEET No.
0	S1.01
JOB No. 3951-500	

DO NOT SCALE
IF IN DOUBT ASK
CHECK ALL DIMENSIONS
ORIGINAL SIZE = A3

S1.01 - LOCATION PLAN - Date: Wednesday 13th April 2011 - Time: 21:1pm

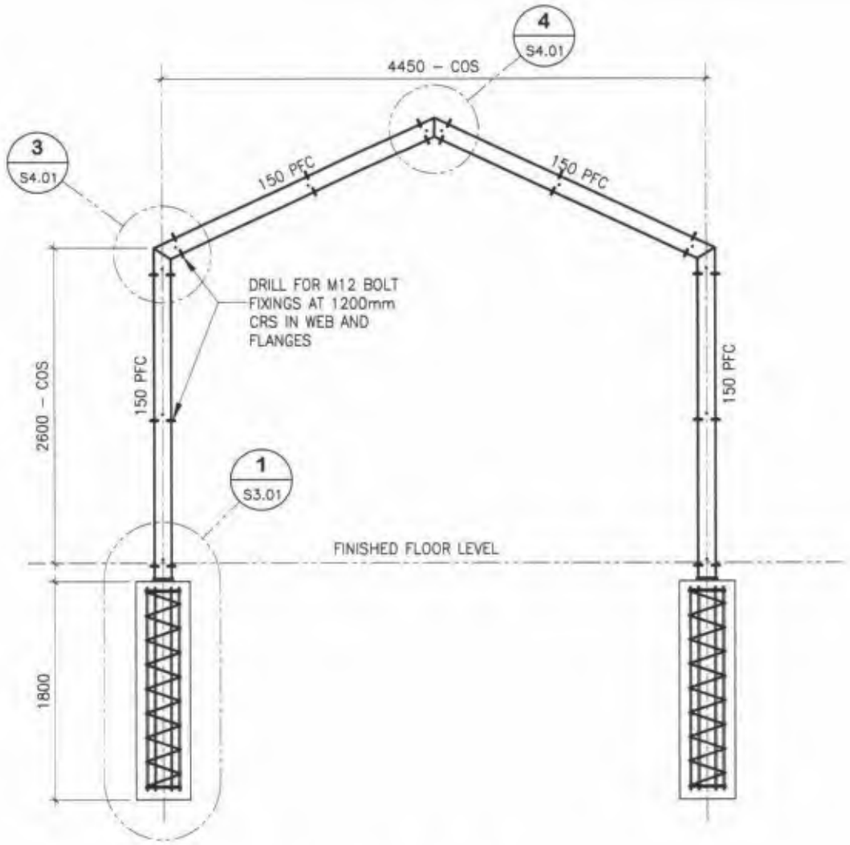

A S1.02 **FRAME ELEVATION - GRID A**
SCALE 1:50

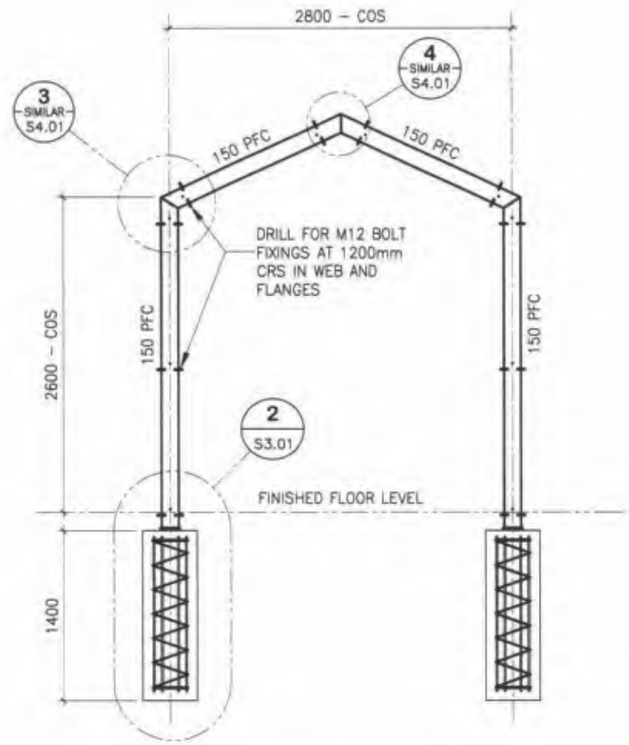

B S1.02 **FRAME ELEVATION - GRID A**
SCALE 1:50

ISSUED FOR CONSENT
13th APRIL 2011

NFDC Approved
18 APR 2011

ISSUE	AMENDMENT	DATE	BY
0	CONSENT ISSUE	13.04.11	DGW

COPYRIGHT:
THIS DOCUMENT AND THE COPYRIGHT IN THIS DOCUMENT REMAIN THE PROPERTY OF TSE TARANAKI & ASSOCIATES LIMITED. THE CONTENTS OF THIS DOCUMENT MAY NOT BE REPRODUCED EITHER IN WHOLE OR IN PART BY ANY MEANS WHATSOEVER WITHOUT THE PRIOR WRITTEN CONSENT OF TSE TARANAKI & ASSOCIATES LIMITED.

CONTRACTORS TO:
VERIFY ALL DIMENSIONS AND CHECK ALL LEVELS ON SITE BEFORE COMMENCING ANY WORK; REFER TO FIGURED DIMENSIONS; REFER ANY DISCREPANCIES TO THE DRAWING OFFICE; CHECK THAT ALL WORKMANSHIP AND MATERIALS CONFORM WITH THE BUILDING ACT 2004 & THE NEW ZEALAND BUILDING CODE.

Drawn	DG WHITMORE	13.04.11
Design	F. KERSLAKE	APRIL 2011
Checked		
Approved		

Tse Taranaki & Associates Limited
STRUCTURAL & CIVIL ENGINEERS
PROJECT MANAGERS
148 POWDERHAM STREET – PO BOX 237
NEW PLYMOUTH – NEW ZEALAND
TEL 64.6.7588390 – FAX 64.6.7579404
EMAIL: tse@tsetaranaki.co.nz

TITLE
PERRETT PROPERTIES LTD
699 PLYMOUTH ROAD - OMATA

NEW RESIDENCE
PORTAL DESIGN DETAILS

SHEET CONTENTS
FRAME ELEVATIONS

A1 SCALE	
A2 SCALE	
A3 SCALE	1:50

ISSUE: 0
JOB No. 3951-500
SHEET No. S2.01

DO NOT SCALE
IF IN DOUBT ASK
CHECK ALL DIMENSIONS
ORIGINAL SIZE = A3

S2.01 - FRAME ELEVATIONS - Date: Wednesday 13th. April 2011 - Time: 21:1pm

NEW PLYMOUTH DISTRICT COUNCIL

Code Compliance Certificate No:584
Section 43(3), Building Act 1991

Building Consent No: 90

OWNER : MR Kevin Dennis LANDRIGAN

Mailing Address: 7 HICKFORD PLACE, OKATO
Contact: B D HILL BUILDING LTD
Mailing Address: 7 HICKFORD PLACE, OKATO
Application received:

PROJECT LOCATION

Street Address: 195 PLYMOUTH ROAD, OMATA
Property ID: 005877
Assessment No: 11631/133.00
Legal: PT SEC 161 DP 2636 LOT 1 DP 16942 PT SEC 160 OAKURA DIST BLK I E

PROJECT

The project is for Alterations
Intended Use(s): RESIDENTIAL
Intended life: Indefinite but not less than 50 years

COUNCIL CHARGES

The Council's total charges payable on the uplifting of this code compliance certificate in accordance with the attached details are: $0.00

This is a final code compliance certificate issued in respect of all of the buil work under the above building consent

Approving Officer. M. E. Ah.....

Date..1.2.1.94..

LIARDET STREET PRIVATE BAG 2025 NEW PLYMOUTH 4620 NEW ZEALAND
TELEPHONE (06) 758 8099 FAX (06) 758 3257

Document Set ID: 628816
Version: 1, Version Date: 08/10/2001

RECEIVED: 30 Jun 2008 SCANNED: 30 Jun 2008 BOX: 536 BATCH: 32706 DOC: NPDAALPH

NEW PLYMOUTH DISTRICT COUNCIL
newplymouthnz.com

Code Compliance Certificate: 26218
Section 95, Building Act 2004

Issued:17Apr08

The Building

Street Address of building: 699 PLYMOUTH ROAD, OMATA 4621
Legal Description of land where building is located:
PT SEC 161 OAKURA DIST
Current, lawfully established use: New Pole Shed
Year first constructed: 2007

The Owner

Name of owner: MR Colin Martin CHRISTIE
Contact Person: PLACEMAKERS STRATFORD
Mailing Address: C/-PLACEMAKERS STRATFORD
88 JULIET ST
STRATFORD

Street address/registered office: 699 PLYMOUTH ROAD
OMATA 4621

Phone number: 027 481 7954 (Bus.)
769 6971 (Pvt.)
Facsimile number:
Email address:
Website:

First point of contact for communications with council/building consent authority:

New Plymouth District Council
Private Bag 2025
NEW PLYMOUTH
Ph: 06 7596060
Fax: 06 7596072
Email: enquiries@npdc.govt.nz

Building Work

Building Consent number: 98739
Issued by: New Plymouth District Council

RECEIVED: 30 Jun 2008 SCANNED: 30 Jun 2008 BOX: 536 BATCH: 32706 DOC: NPDAALPH

Building Consent number: 98739

Code Compliance

The building consent authority named below is satisfied, on reasonable grounds, that -

(a) the building work complies with the building consent.

Council Charges

The Council's total charges payable on the uplifting of this code compliance certificate in accordance with the attached details are: $0.00

This is a final code compliance certificate issued in respect of all of the building work under the above building consent

1: CODE COMPLIANCE CERTIFICATE

Signature

Team Leader Inspectorate

Position

On behalf of: New Plymouth District Council

Date: 17 Apr 2008

Document Set ID: 727983
Version: 1, Version Date: 12/01/2009

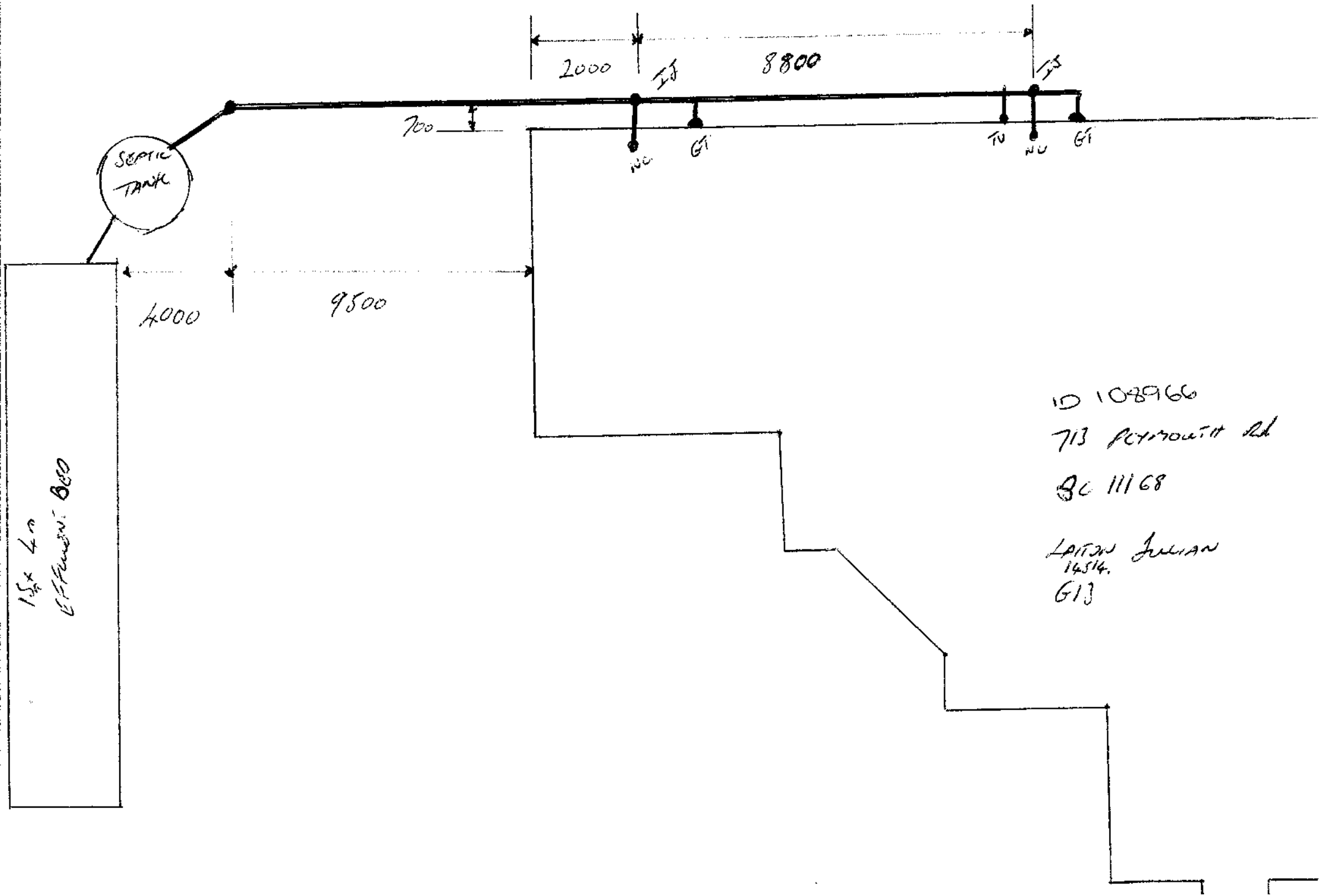
2000
8800
700
SEPTIC TANK
4000
9500
15x 40 EFFLUENT BED
NU
GI
TU
NU
GI
ID 108966
713 PLYMOUTH Rd
BC 11168
LAITON JULIAN
14514.
GIJ

Te Kaunihera-ā-Rohe o Ngāmotu
NEW PLYMOUTH DISTRICT COUNCIL
newplymouthnz.com

Code Compliance Certificate

Form 7, Section 95, Building Act 2004

The Building

Street Address of building: 713 Plymouth Road NEW PLYMOUTH 4374
Legal Description of land where building is located: Lot 1 DP 434633
Current, lawfully established use: Dwelling
Year first constructed: 2011

The Owner

Name of owner: Perrett Properties Limited
Contact Person: Perrett Properties Limited
Mailing Address: 713 Plymouth Road, RD 4
NEW PLYMOUTH 4374

Phone number: (Bus.) 06 751 4142
(Pvt.) 021 414 668
Facsimile number: -

Building Work

Building Consent number: **BC11/111168**
Description of work: **New 4 bedroom dwelling with attached garage**
Issued by: New Plymouth District Council

Code Compliance

The building consent authority named below is satisfied, on reasonable grounds, that –
(a) the building work complies with the building consent.

This is a final code compliance certificate issued in respect of all of the building work under the above building consent.

CODE COMPLIANCE CERTIFICATE

Team Leader Inspectorate

Date Issued: 13 December 2012

TARANAKI like no other

26 A3/A4

SCANNED

BUILDING PERMITS

62897

ID 005877

LLP 097135

25 Images

BUILDING PERMIT

6345

1978

PROPERTY ID 005877

Document Set ID: 411667
Version: 2, Version Date: 08/10/2015

T A R A N A K I C O U N T Y C O U N C I L

BUILDING PERMIT APPLICATION FORM Permit No 6345

To The County Engineer,
P.O. Box 56,
NEW PLYMOUTH

Sir,

I hereby apply for permission to CONVERT WALK THROUG DAIRY TO 10 ASIDE HERRING BONE
at (House No. & Street) 5/A PLYMOUTH ROAD for (Owner) L.H. POPE,
of (Address) 17A BRONTE PLACE N.P. according to locality plan
and detailed plans, elevations, cross-sections and specifications of
building deposited herewith IN DUPLICATE.

SITE: Lot No. _____ D.P. No. _____ Section NORT SEC 159/160

Block No. 1 Survey District EGMOND Area 40.1185 HECTARES

PROPOSED BUILDING: Use - describe proposed purpose for which every part is used or occupied:

FARM DAIRY

Area of Ground Floor _____ sq.m.

Estimated value of completed building ALTERATIONS $ 9,500 (For Assessment of Building Research Levy)

Less value of Plumbing & Drainage $ _____

Balance $ _____ (For Assessment of Building Permit Fee)

Yours faithfully,

L H Pope
Builder

Address 17 A BRONTE PLACE
NEW PLYMOUTH.

Date 17-4-78

Note: Fees according to the scale on back hereof must accompany application for permit. Special plumbing and drainage application forms are required and where applicable, separate permits must be obtained by the Plumber or Drainlayer before a building permit will be issued

FOR OFFICE USE

Date received _____ Fee Paid
(a) Building Permit $ 12 —
(b) Building Research Levy $ _____
(c) Water Conn. $ _____
(d) Sewer " $ _____
(e) Kerb Crossing $ _____

Receipt No 2598E Val.Roll 11630/397

Check	Remarks	Initials
Ordinances	✓	Cathcyne 21/4/78
P & D Regs		
Building Regs	✓	
Fire Code		
Structural Content	✓	
Water Connection		
Kerb & Footpath Crossing		
Regn. Cert. (Blgs over $20,000)		

Document Set ID: 411667
Version: 2, Version Date: 08/10/2015

Work nearing completion.

Work commenced 24/5/78

6345 W H Pope alter milking shed

Pope W H 51 A Plymouth Rd

Document Set ID: 411667
Version: 2, Version Date: 08/10/2015

NAME MR ~~S.~~ W.H. POPE

Ministry of Agriculture & Fisheries

SUMMARY OF STRUCTURAL DETAILS

SOIL TYPE HARD SOIL

WALLS

	Bail Area	Milk Receiving Room	Milk Storage Room
Material	CONCRETE BLOCK		
Foundation size	300 X 200		
Foundation reinforcement	2 - D - 12 D - 12 - 1000		
Cladding/finish	PAINT		

For wall reinforcement see detail sheet Nos. 308

For lateral support of unsupported walls sheet No. ___/not req'd*

For portal frame details see sheet Nos. ___/not req'd*

ROOF

Bail Area:

Rafters 127X76X6.3 RHS at 2700 mm c/c

Purlins 125 X 50 at 900 mm c/c

Cladding CORRUGATED IRON slope 5 °

Milk Receiving and Storage Room:

Rafters ___ at ___ mm c/c

Purlins ___ at ___ mm c/c

Cladding ___ slope ___ °

Ceiling:

Bail Area N/A /not req'd*

Milk Receiving Room ___

Milk Storage Room ___

* Cross out appropriate part

TARANAKI COUNTY COUNCIL
APPROVED
Authorised Officer
Date 21/4/78

~~Completed by:~~ S. BERRY

Date: OCTOBER 5 1977

Checked by: J Ab.g

Date: 12-10-77

FARM DAIRY DESIGN SERVICE

AM613-1000-02-77

Document Set ID: 411667
Version: 2, Version Date: 08/10/2015

NOTES ON DESIGN LOADINGS

Designed in accordance with NZS 4203 1976

LIVE As per NZS 4203 1976 Table 3. Live load on roof varies with area from 2.3 to 0.17 kPa or 1 kN load.

DEAD As stated on individual sheets. Roof construction other than light metal sheathing and timber framing may need specific design.

WIND The basic designs allow for a basic wind speed of up to 45 mls, however alternative desings for some structural elements are provided for zones 1 and 2 (refer sheet 004). These alternative designs allow for basic wind speeds of 35 mls and 40 mls respectively. Buildings in zone 4 (refer sheet 004) or on any site exposed to abnormal wind conditions may require specific design.

SNOW No allowance made for snow. For snow loads refer NZS 4203 1976 - 2.3. Specific design for snow loads may be required above 250 m above sea level in South Island.

EARTHQUAKE As per NZS 4203 1976 zone A.
R = 1 I = 1

FOUNDATIONS Maximum safe bearing pressure as stated on individual sheets. Foundations on loose sand, soft clay, soft soil or peat may need specific design for settlement and bearing pressure.

DESIGN LOAD COMBINATIONS

WORKING STRESS DESIGN (TIMBER AND STEEL)

Refer to NZS 4203 1976. Allowable stresses have been increased by the following factors for farm buildings.

	Gravity	Wind	Earthquake
Timber	1.0	1.5	1.46
Steel	1.2	1.2	1.33

ULTIMATE STRENGTH DESIGN (MASONRY AND CONCRETE)

Gravity $U_F = \dfrac{1.4D + 1.7LR}{1.25}$

Wind $U_F = \begin{cases} \dfrac{1.25\ (D + 1.3LR + 1.3W)}{1.33} \\ \dfrac{1.25\ (0.9D + 1.3W)}{1.33} \end{cases}$

Earthquake $U_F = \begin{cases} \dfrac{1.25\ (D + 1.3LR + E)}{1.5} \\ \dfrac{1.25\ (0.9D + E)}{1.5} \end{cases}$

Document Set ID: 411667
Version: 2, Version Date: 08/10/2015

Ministry of Agriculture & Fisheries

All designs may be used in zones 1, 2 and 3 some reduction in sizes may be possible in zones 1 and 2 only. Zone 4 may require specific design.

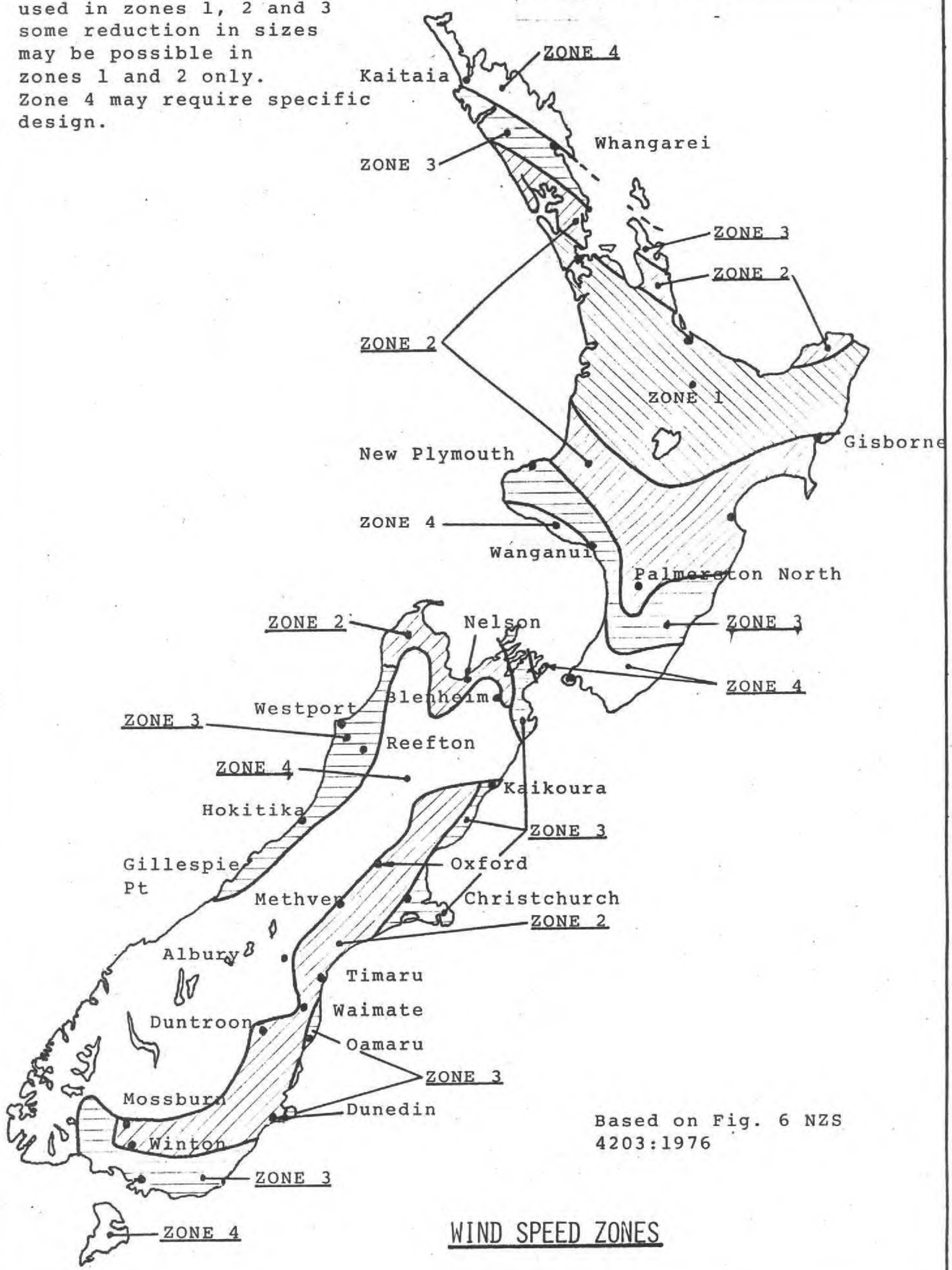

Based on Fig. 6 NZS 4203:1976

WIND SPEED ZONES

FARM DAIRY DESIGN SERVICE

Document Set ID: 411667
Version: 2, Version Date: 08/10/2015

Ministry of Agriculture & Fisheries

Revisions: A 3/77. B 9/77

NOTES ON CONCRETE BLOCK WALLS

(This sheet must be issued with all jobs containing blockwork).

1. Bond beam and footing reinforcement to be lapped at convenient points.

Lap lengths for all reinforcing to be :	D12	- 470 mm
	D16	- 620 mm
	D20	- 770 mm

2. Typical Bond Beam details

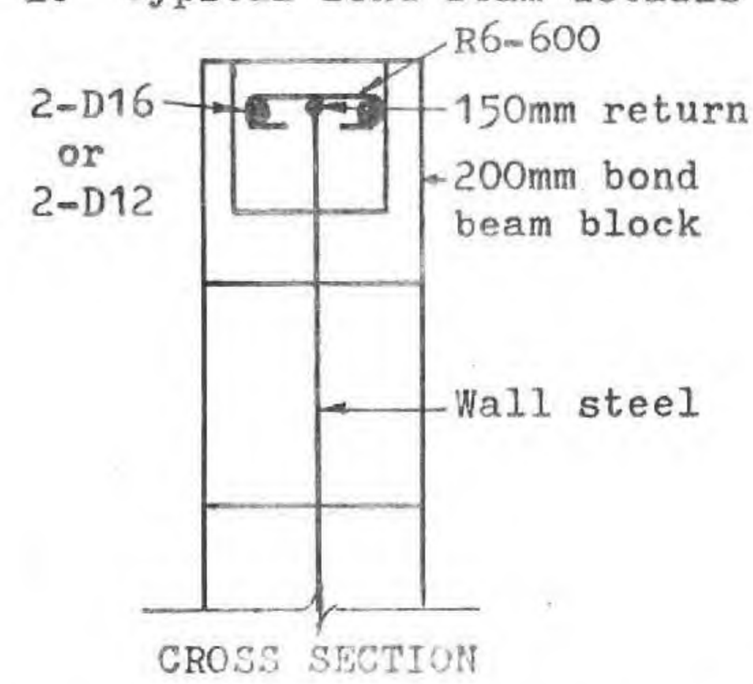

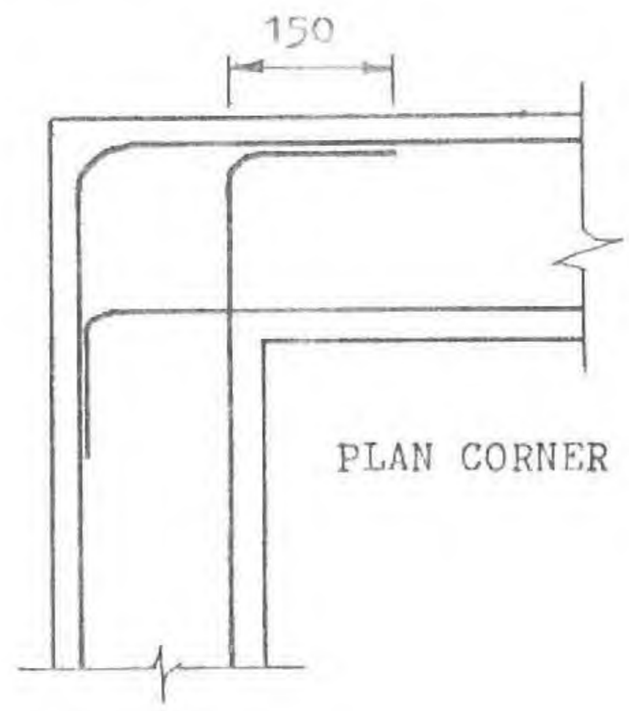

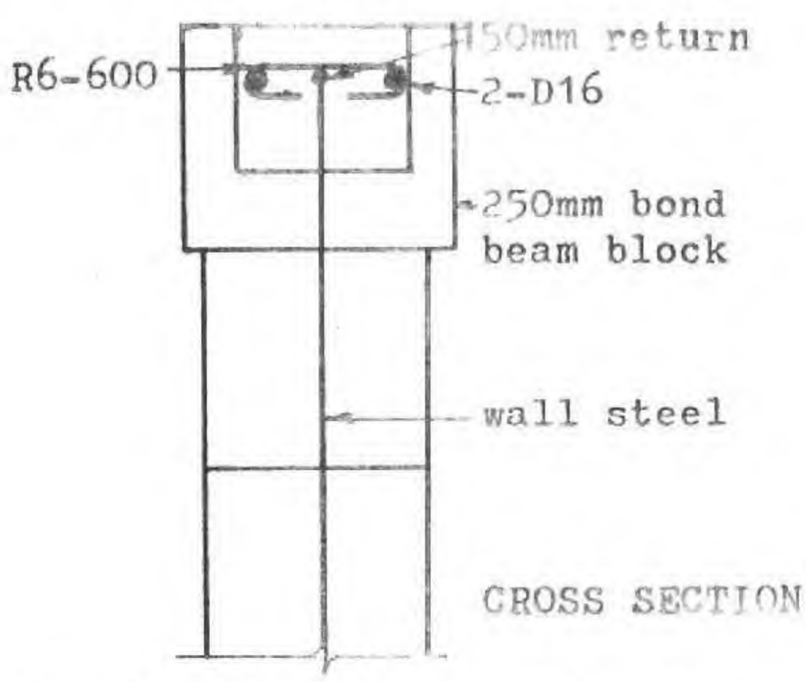

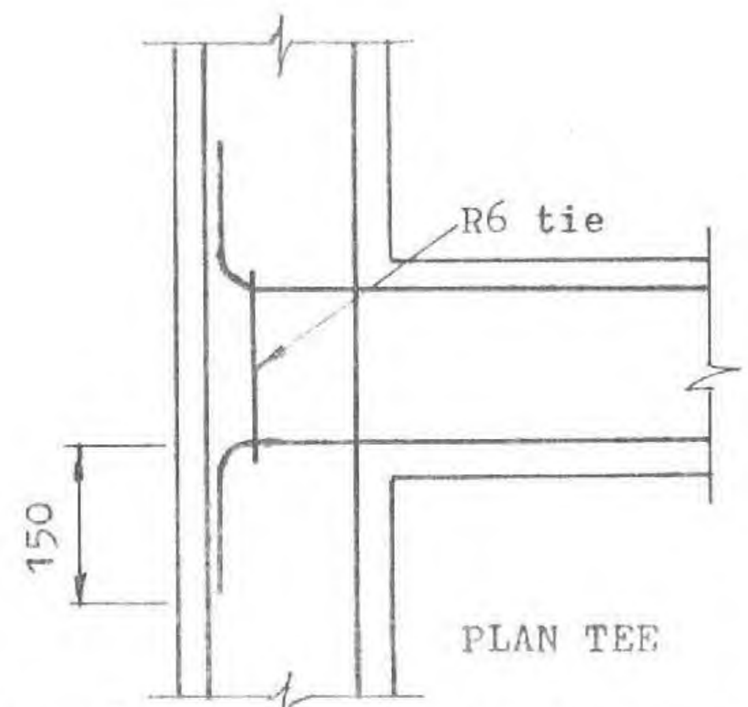

3. Blocks to be bonded using mortar of one part cement to three parts sand plus "Mortarflex" or similar workability agent.

4. All cells containing reinforcing to be filled with concrete of one part cement, two parts sand and two parts 12mm aggregate with a minimum strength of 17 M.Pa. Concrete to be well compacted.

5. Basic Earthquake coefficient (Cd) = 0.45

Document Set ID: 411667
Version: 2, Version Date: 08/10/2015

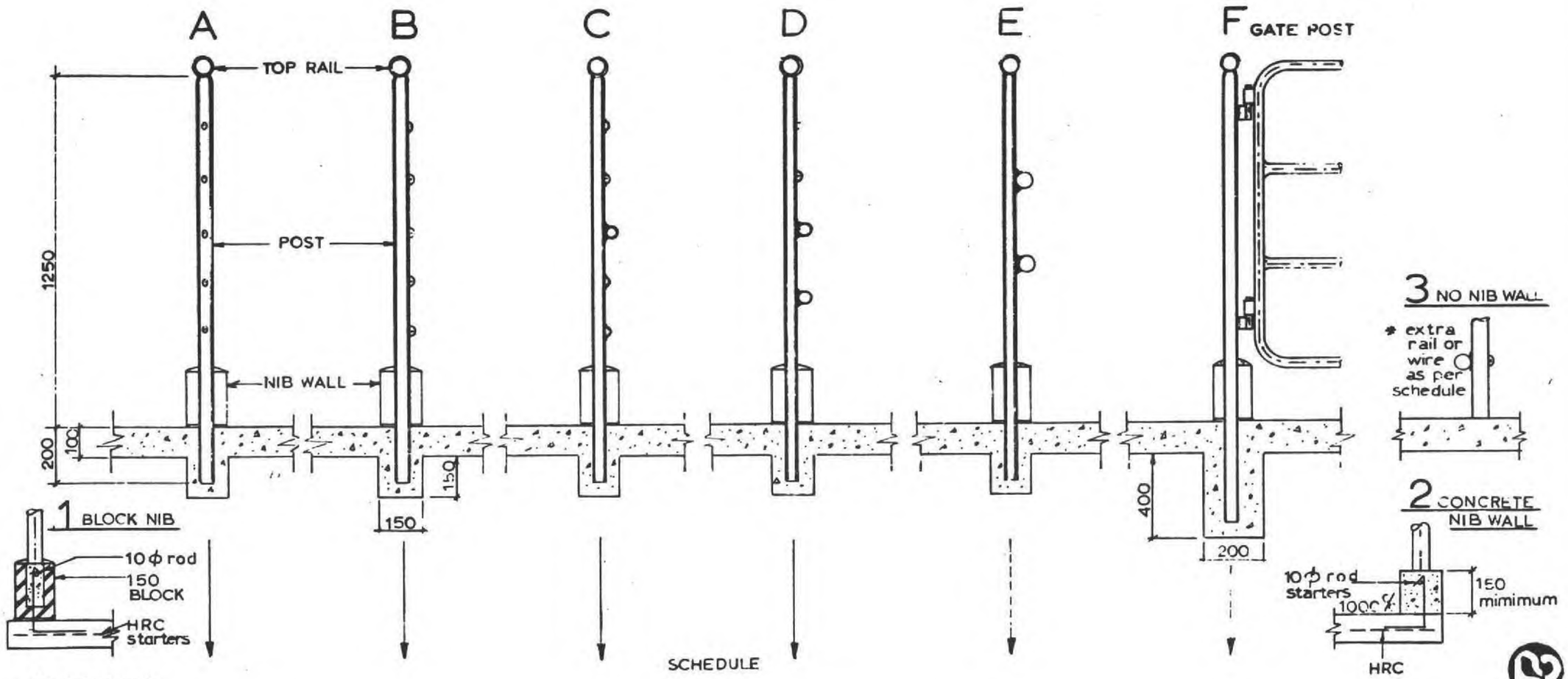

N.B. SIZE(mm)		
TOP RAIL	32 gal. C.H.S.	
POST	40 " " 1800 c-c	
WIRE	2·5 high tensile	
RAILS		
NIB WALL		
1 BLOCK	No 1	
2 CONCRETE		
NO NIB		

* EXTRA RAIL/WIRE

YARD RAILS

Dimensions in mm

KF 76

100

Document Set ID: 411667
Version: 2, Version Date: 08/10/2015

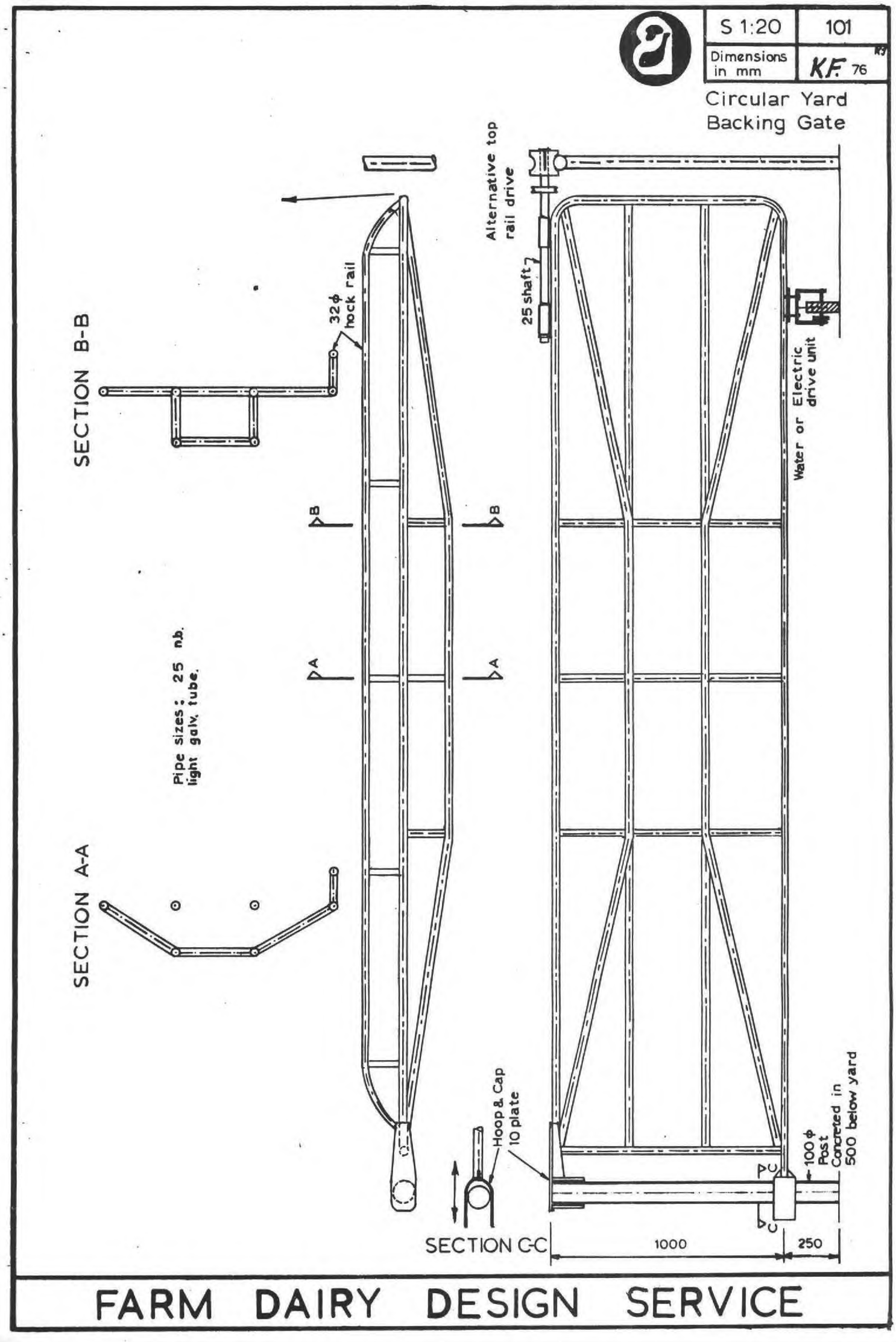

Document Set ID: 411667
Version: 2, Version Date: 08/10/2015

N.S.	102
Dimensions in mm	K.F.-K.J. 76

GATE DESIGNS

A - GATES UP TO 1·8m IN LENGTH

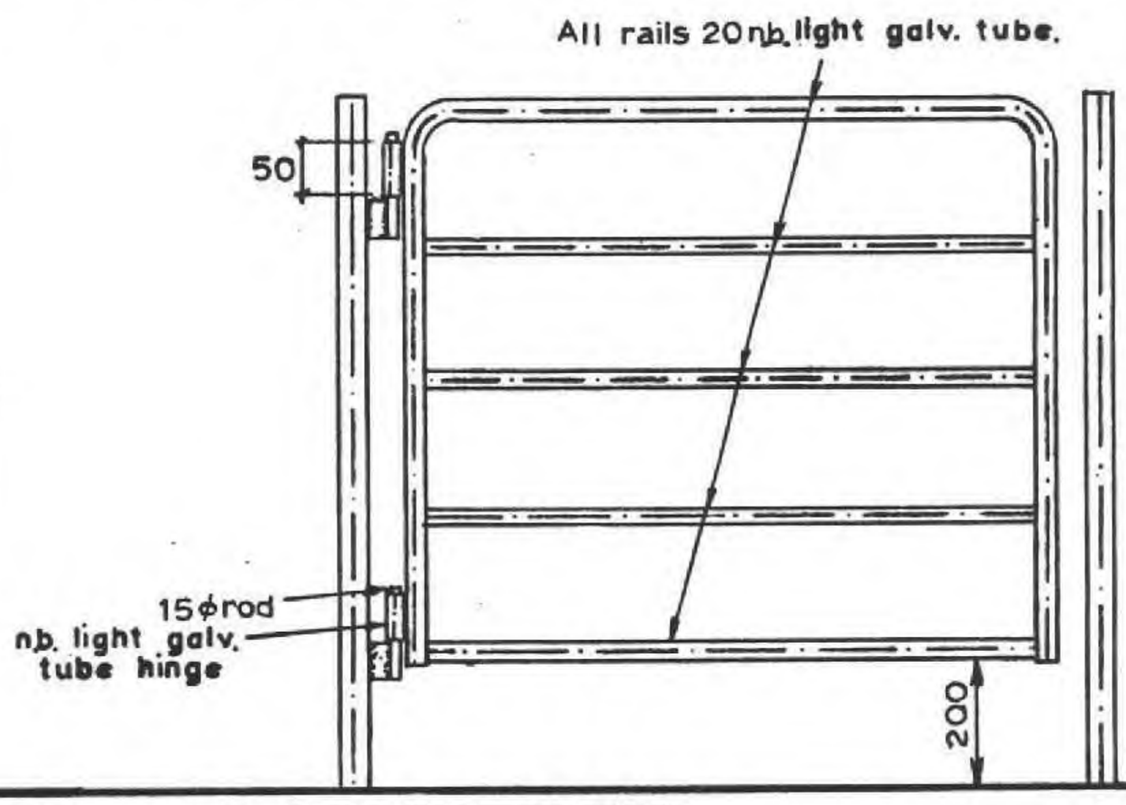

NO 1 - SELF CLOSING CATCH

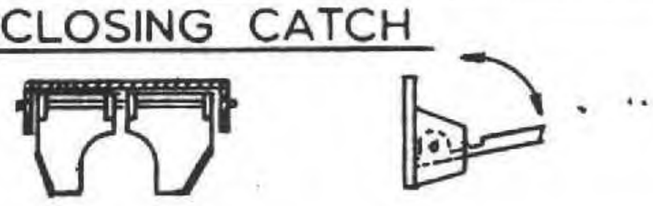

NO 2 - CHAIN CATCH

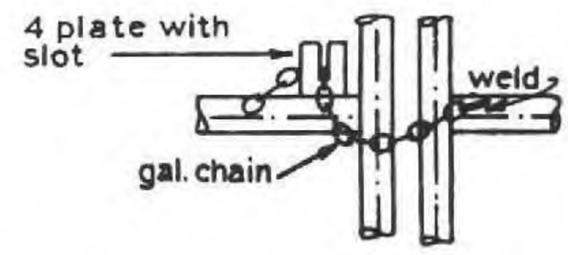

NO 3 - BOLT CATCH

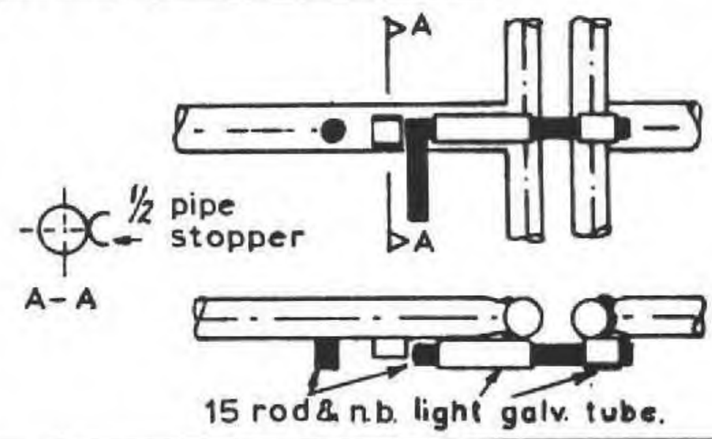

B - GATES 1·5 TO 3m IN LENGTH

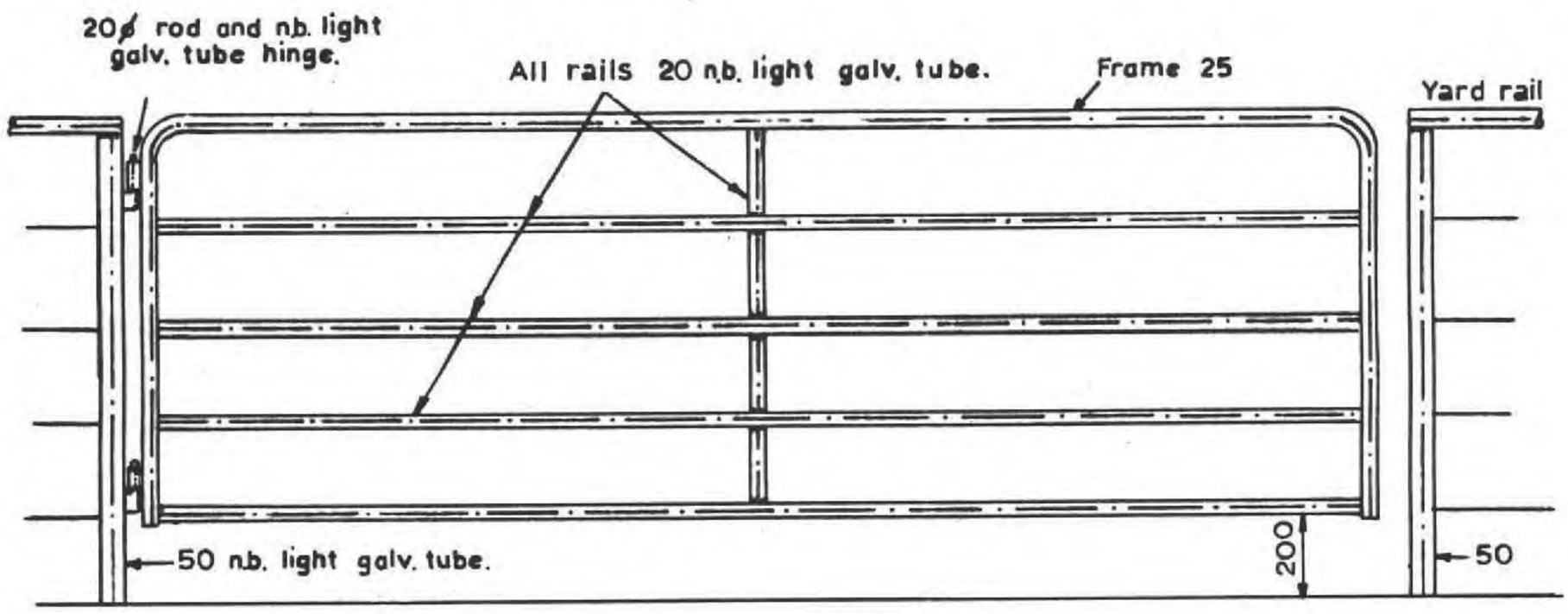

C - GATES 3 TO 4·5m IN LENGTH

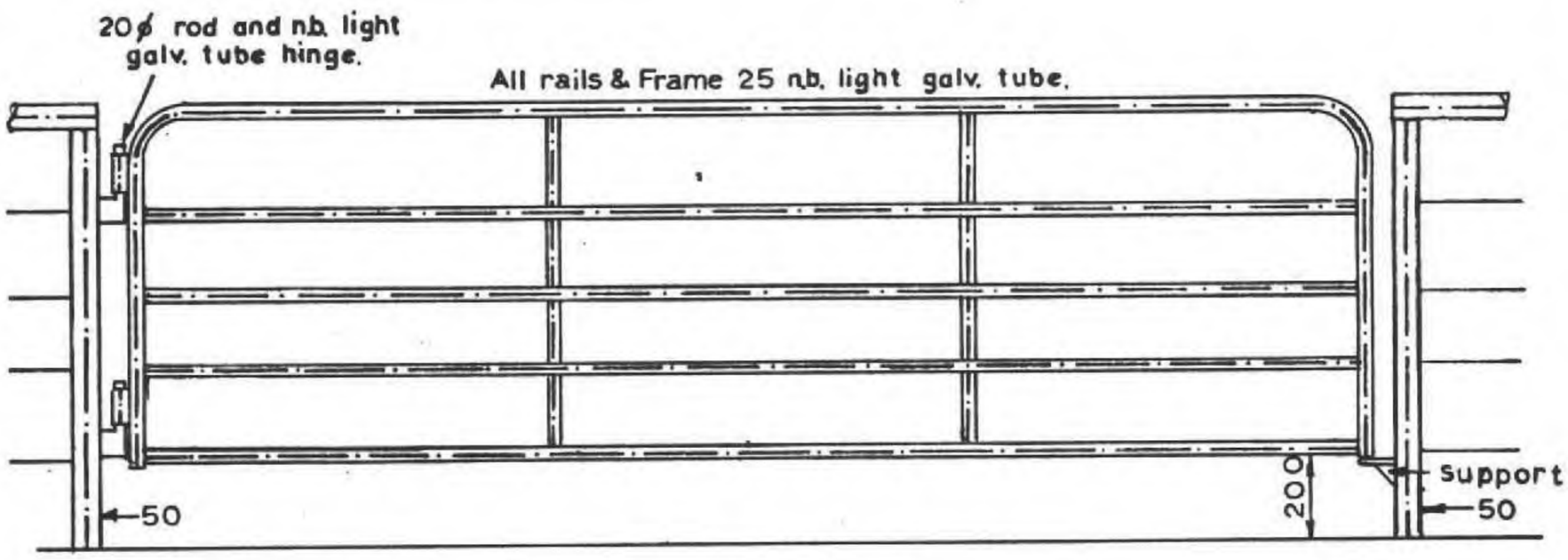

FARM DAIRY DESIGN SERVICE

Document Set ID: 411667
Version: 2, Version Date: 08/10/2015

N.S.	105
Dimensions in mm	K.J.-A.I.76

DRAFTING GATE

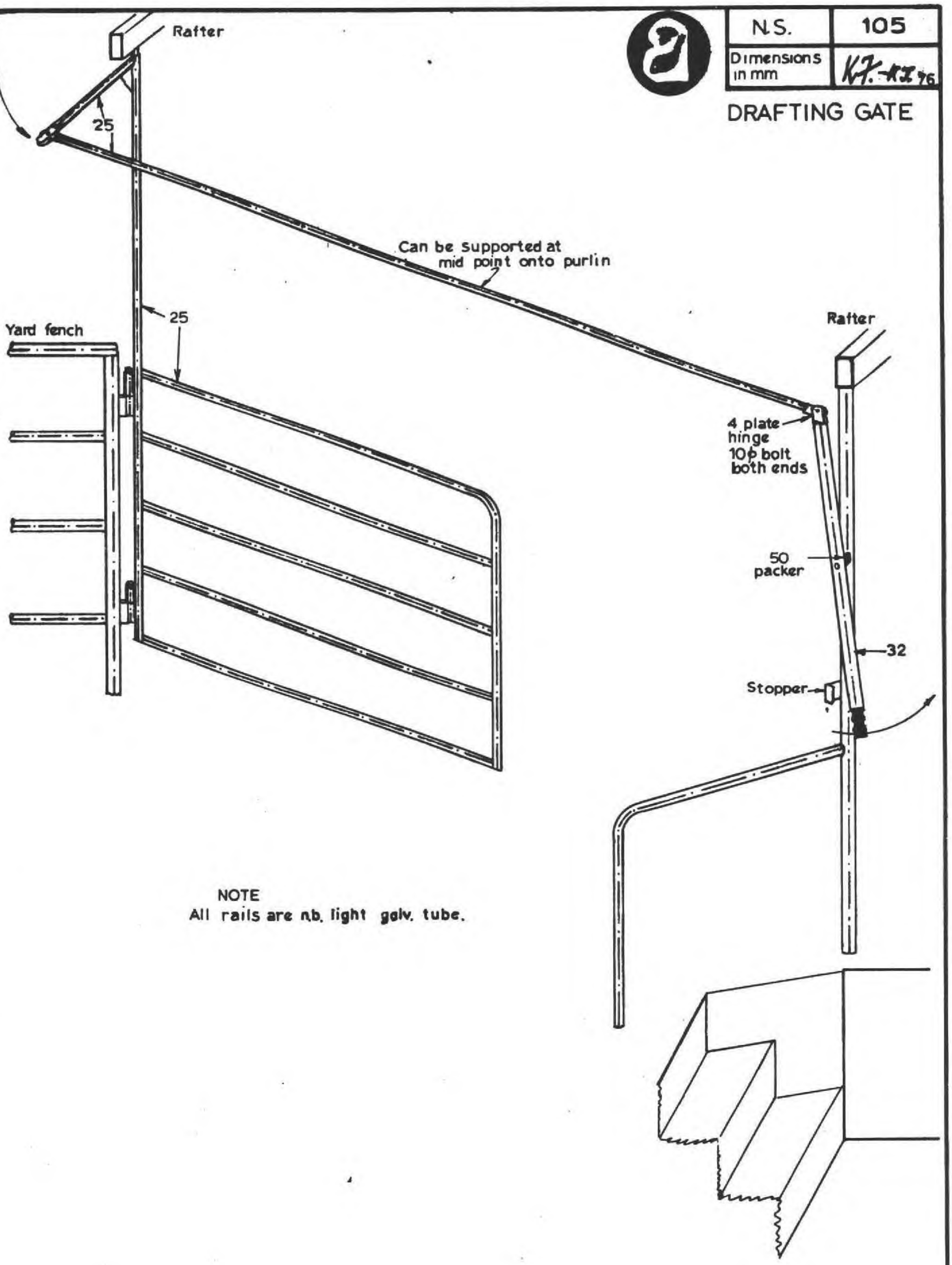

NOTE
All rails are n.b. light galv. tube.

FARM DAIRY DESIGN SERVICE

Document Set ID: 411667
Version: 2, Version Date: 08/10/2015

		202
All dimensions in mm		K7. 78

ADJUSTABLE BREAST RAIL

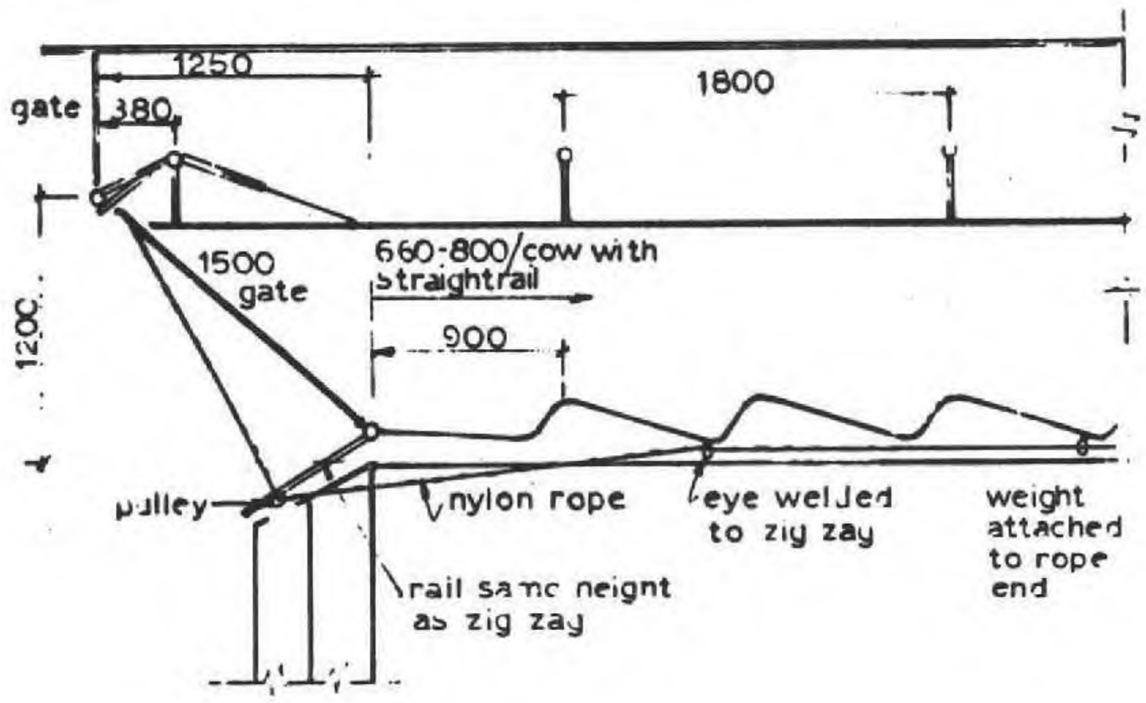

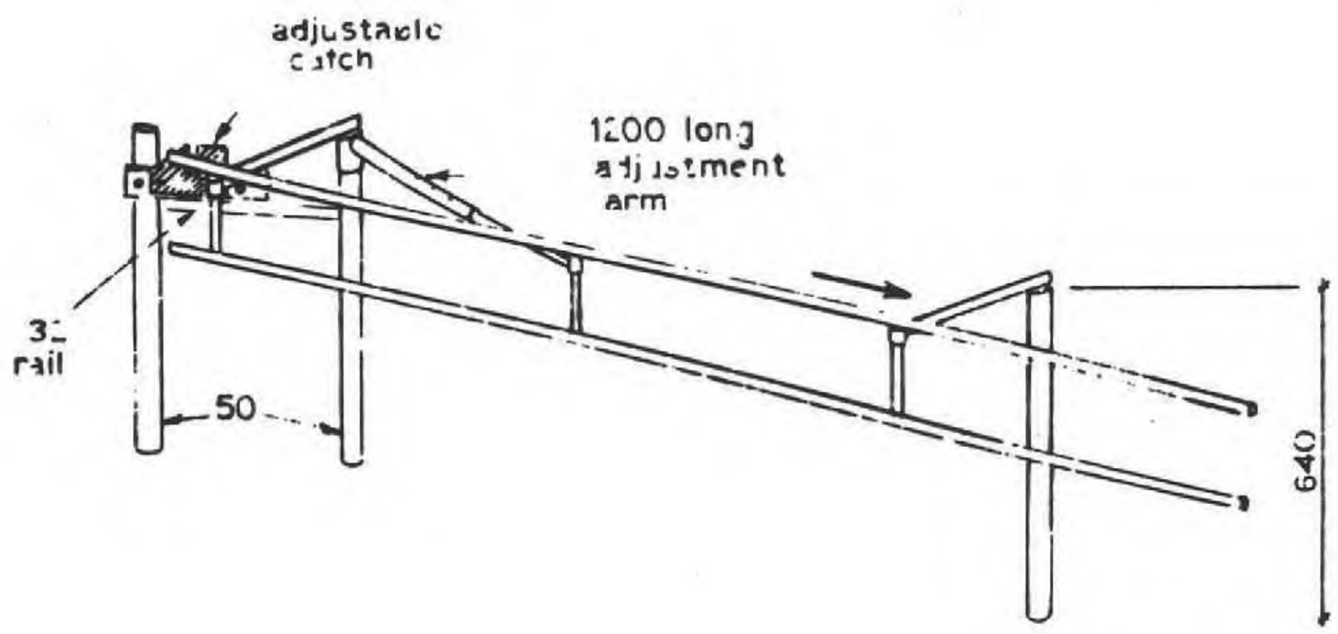

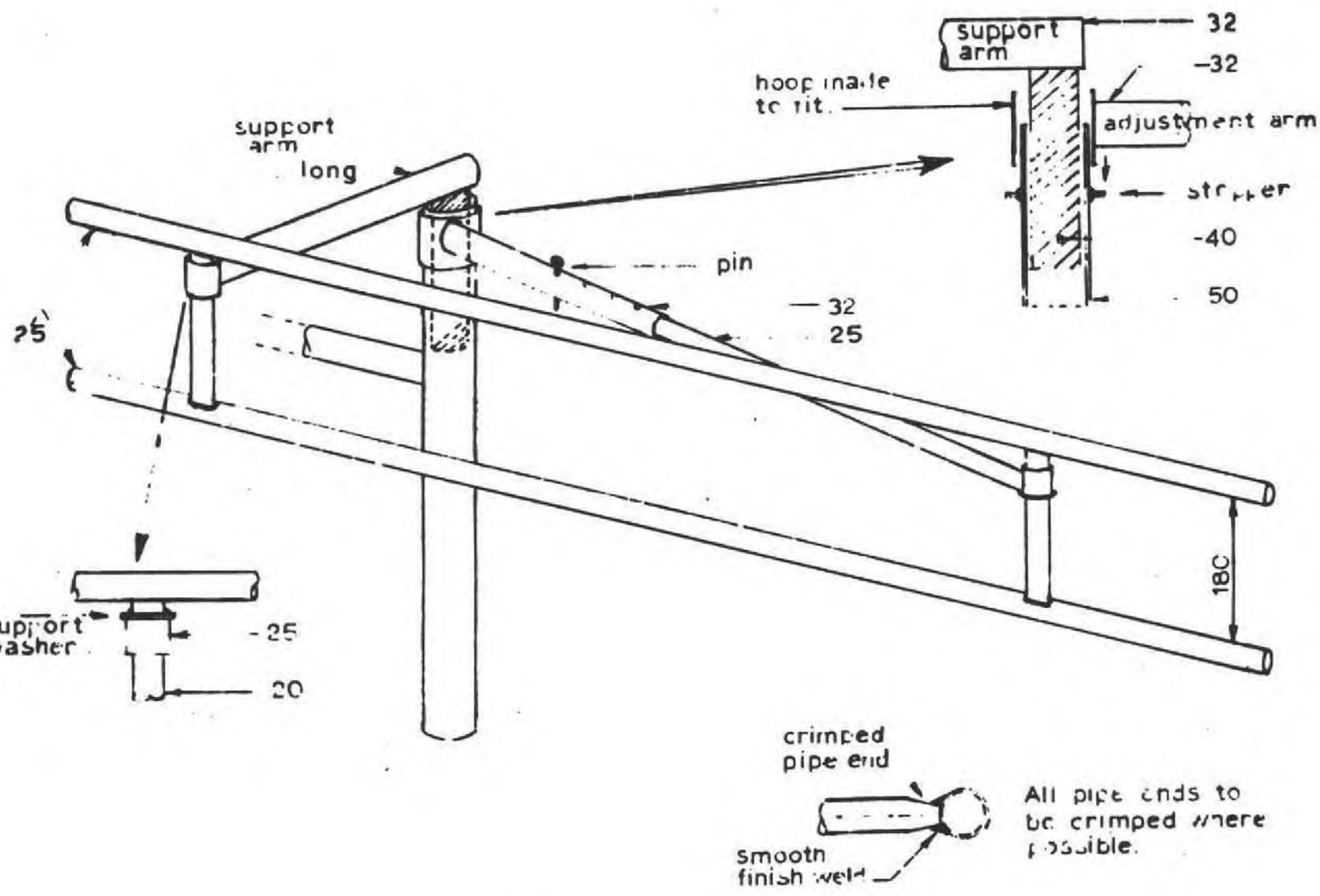

Document Set ID: 411667
Version: 2, Version Date: 08/10/2015

VARIOUS SCALE	203
DIMENSIONS IN mm	K7-K9 14177

HERRINGBONE GATE & CATCH

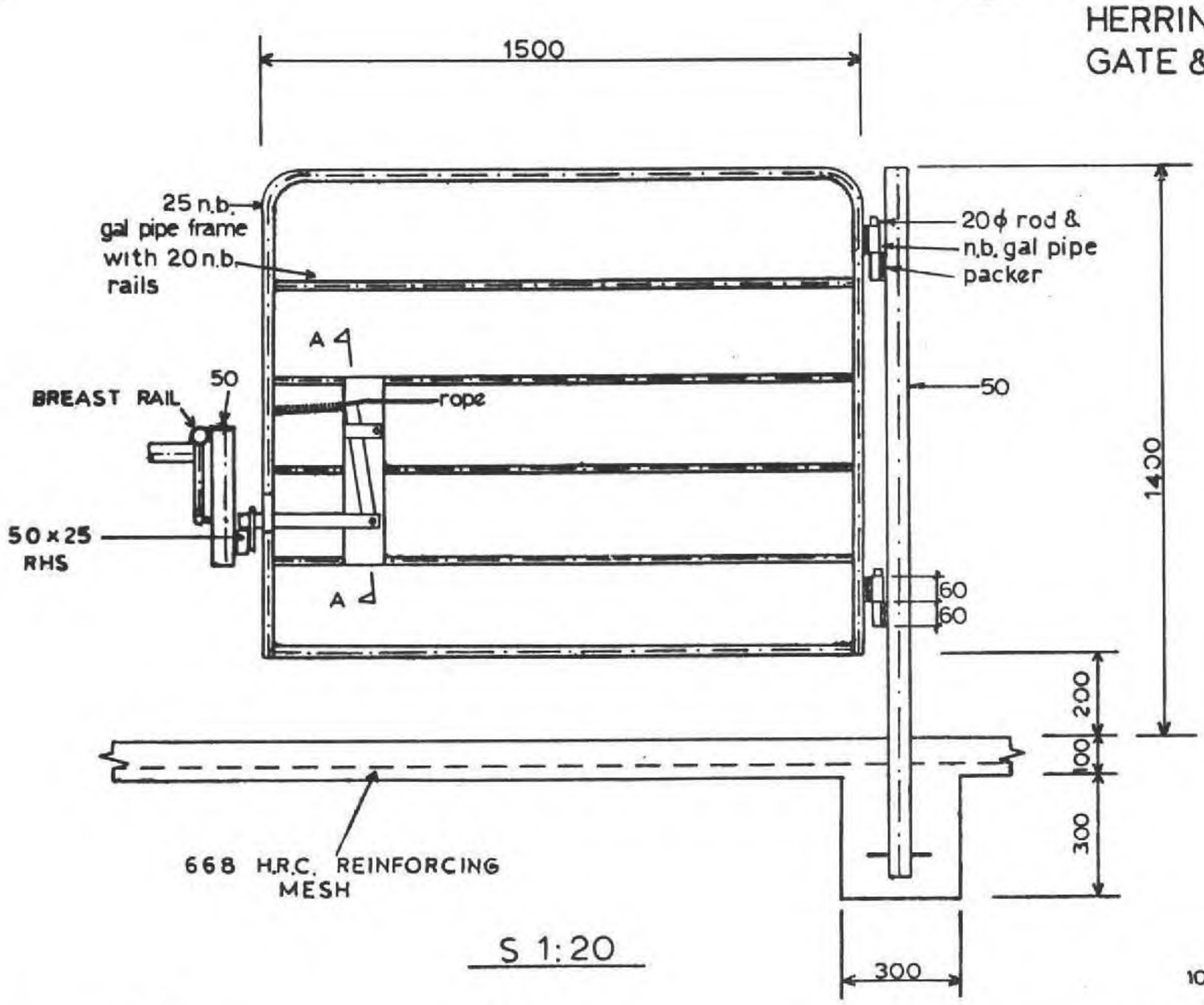

S 1:20

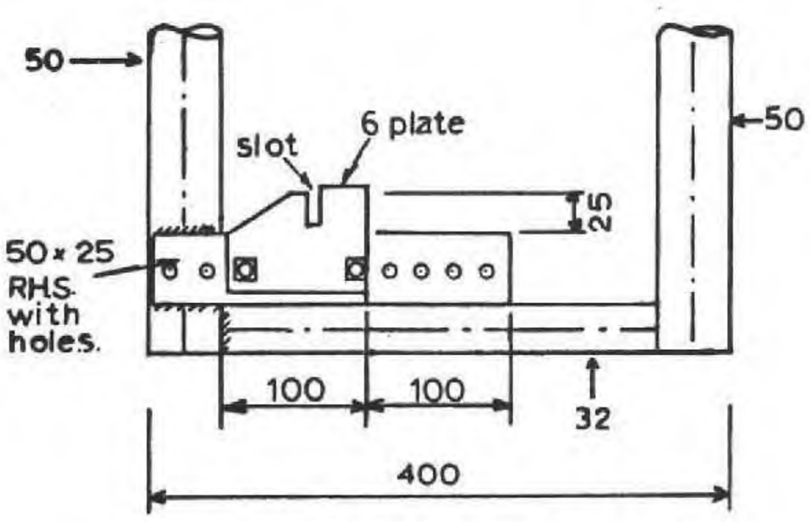

GATE CATCH DETAIL
S 1:7·5

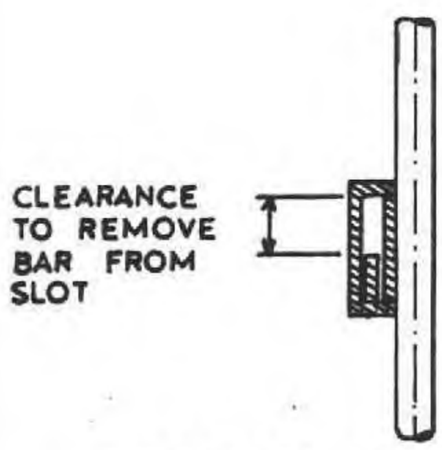

SECTION B-B
S 1:7·5

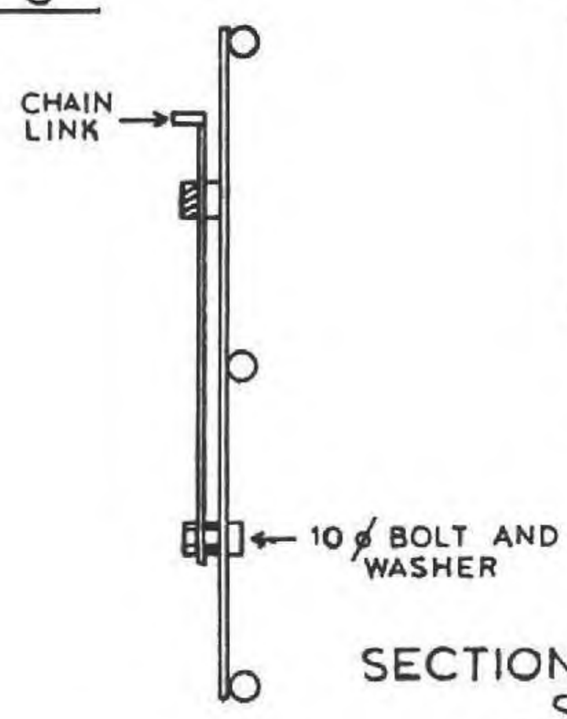

SECTION A-A
S 1:7·5

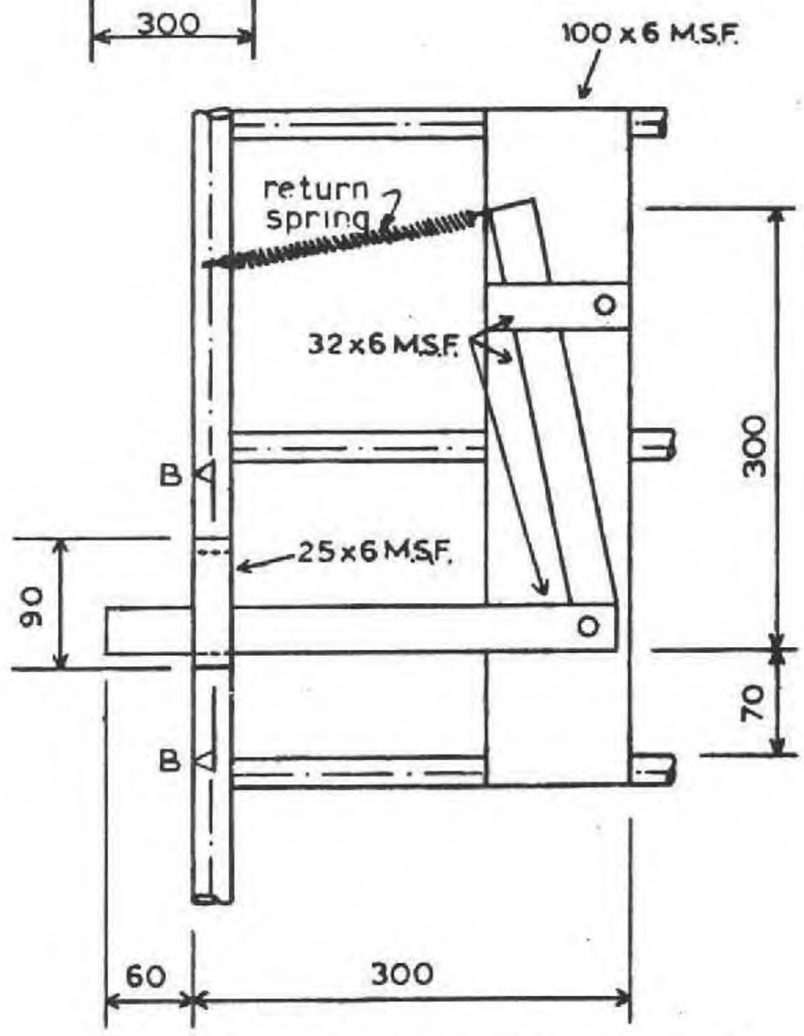

GATE LATCH DETAIL
S 1:7·5

FARM DAIRY DESIGN SERVICE

Document Set ID: 411667
Version: 2, Version Date: 08/10/2015

STOCK RACE

	205
Dimensions in mm S 1:20	K7. 76

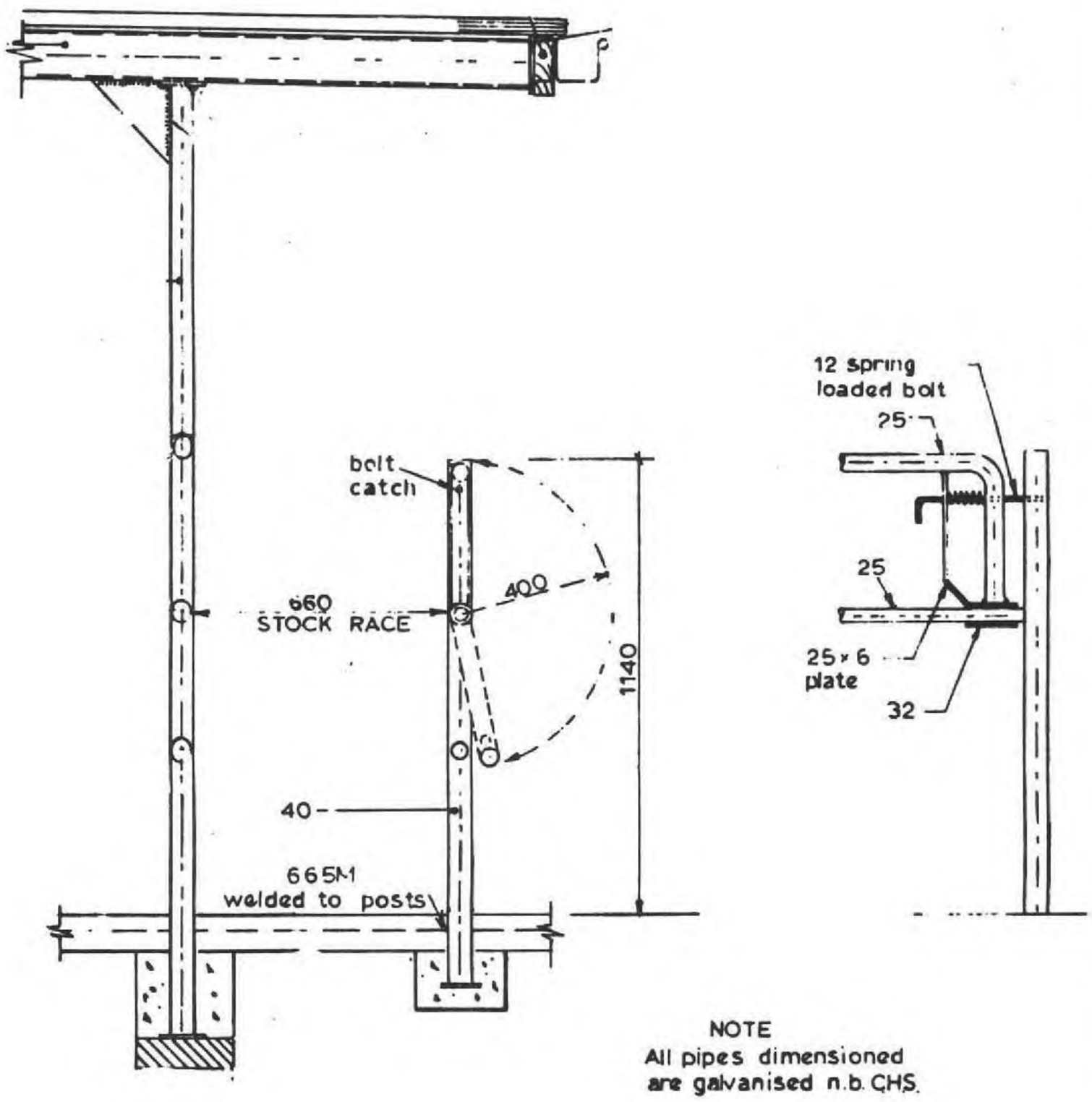

NOTE
All pipes dimensioned are galvanised n.b. CHS.

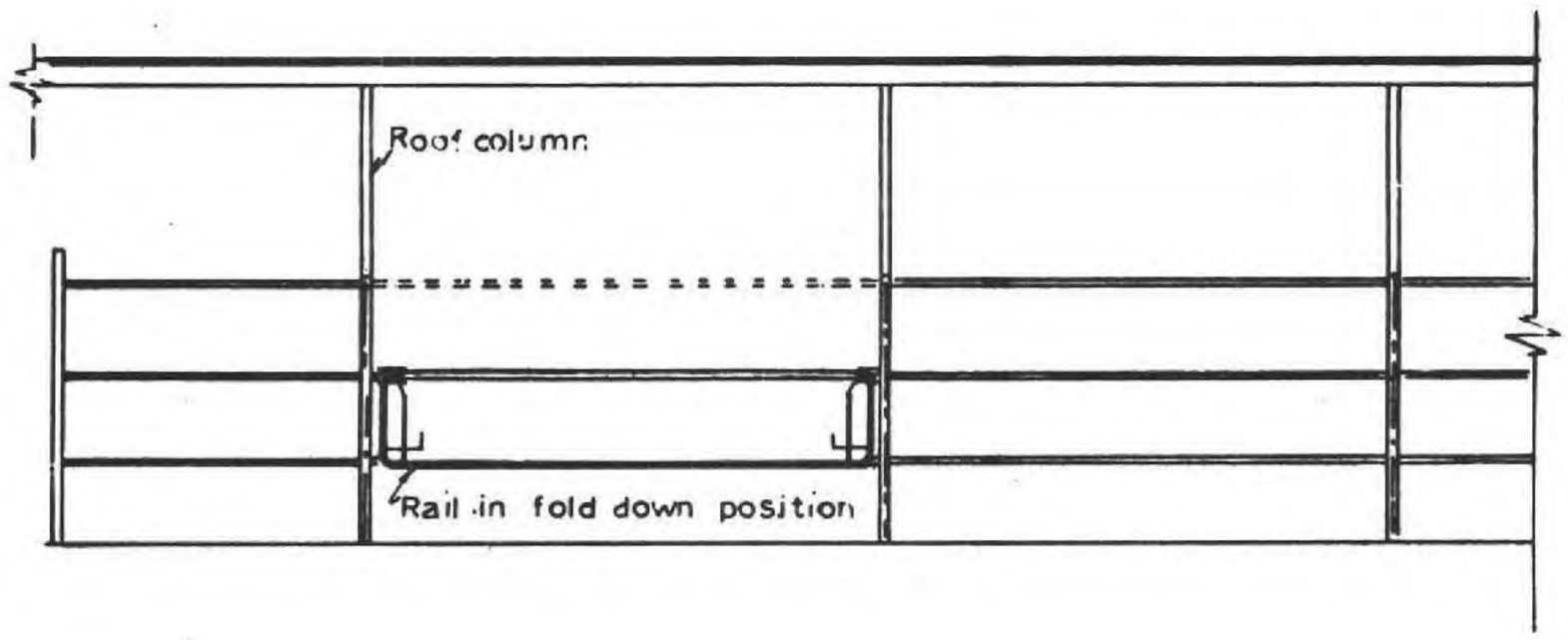

Document Set ID: 411667
Version: 2, Version Date: 08/10/2015

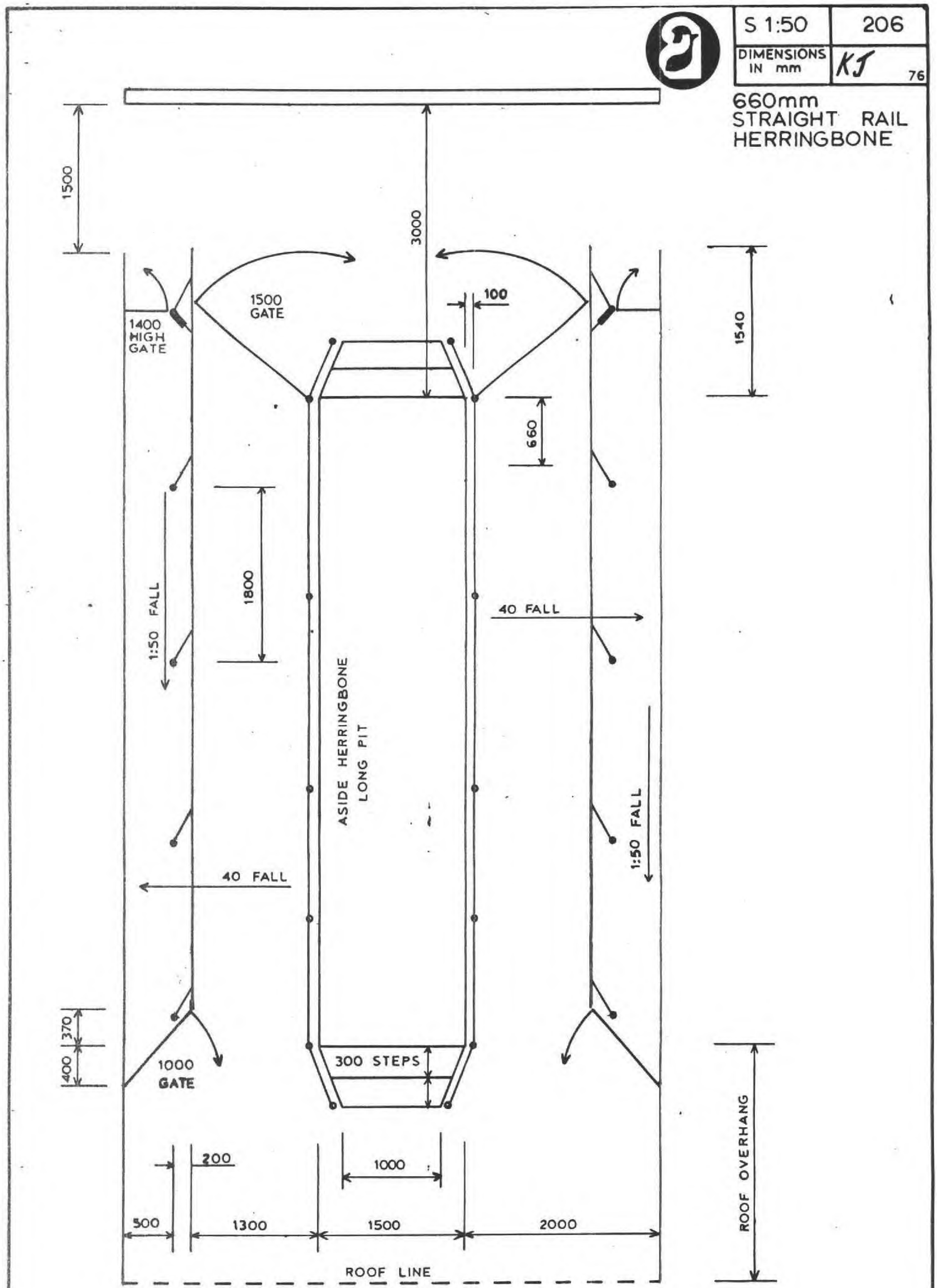

FARM DAIRY DESIGN SERVICE

Document Set ID: 411667
Version: 2, Version Date: 08/10/2015

FARM DAIRY DESIGN SERVICE

NOTE

ALL PIPEWORK IS GALV. n.b. C.H.S.
WELD MESH TO ALL PIPEWORK FOR VOLTAGE PROTECTION.
PLATFORM AND PIT FLOOR CONCRETE STRENGTH 20 MPa.

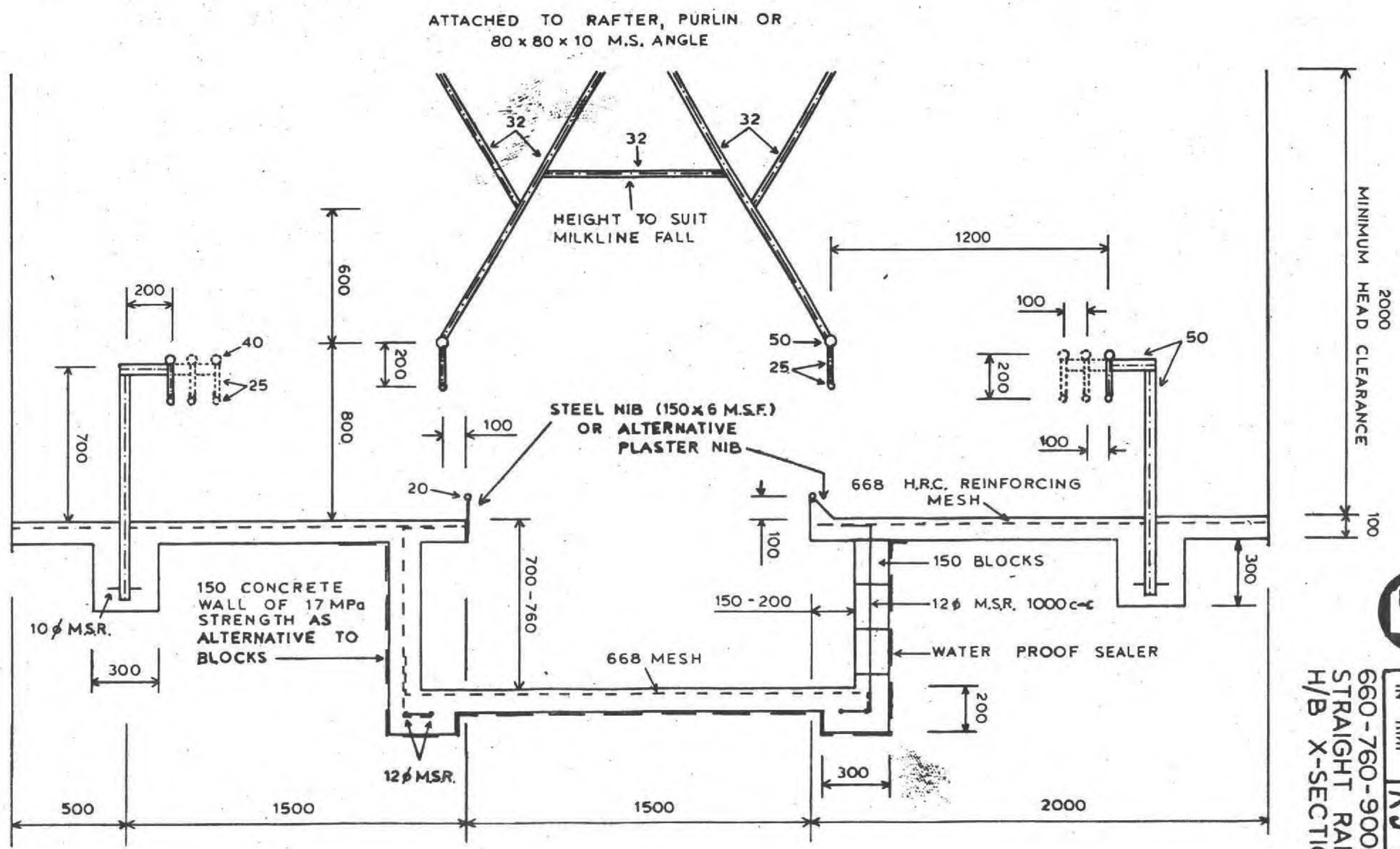

S 1:25

DIMENSIONS IN mm

KJ 5177

214

660-760-900mm STRAIGHT RAIL H/B X-SECTION

Document Set ID: 411667
Version: 2, Version Date: 08/10/2015

VARIOUS SCALE	305
Dimensions in mm.	K7 76

LOUVRES IN MASONRY WALLS

METHOD 1 - NO FRAME LOUVRES

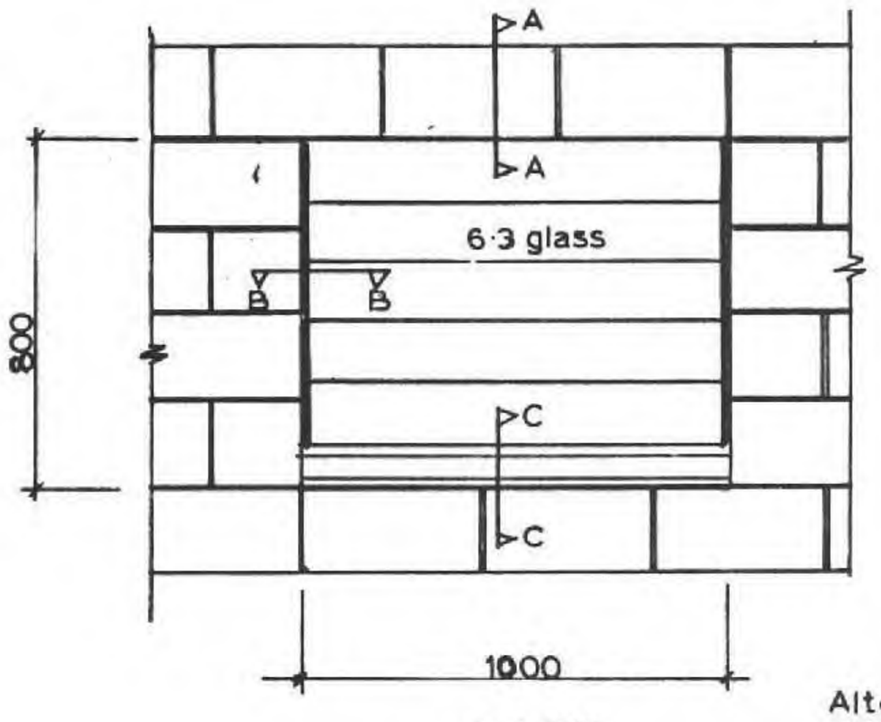

S 1:25

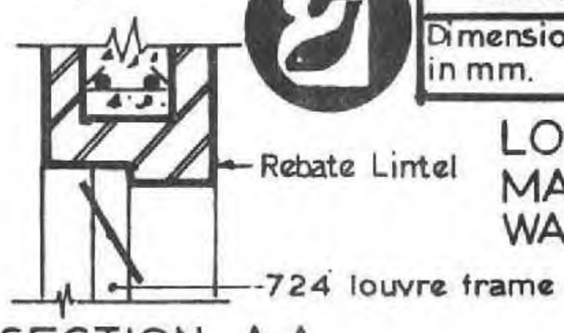

SECTION A-A

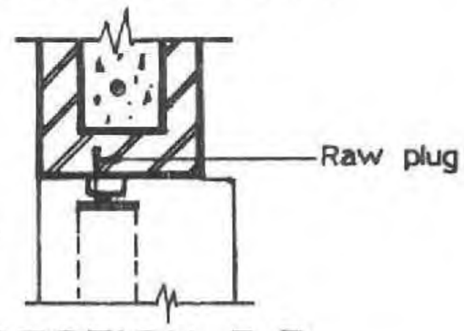

SECTION B-B

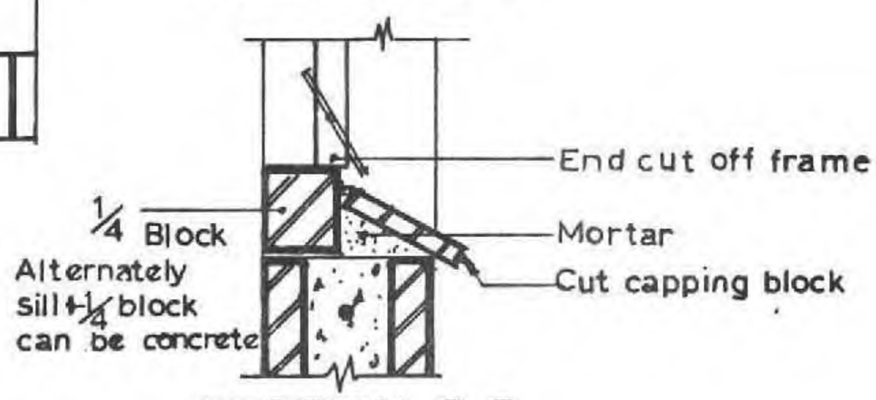

SECTION C-C

S 1:12·5

METHOD 2 - WOODEN FRAME LOUVRES

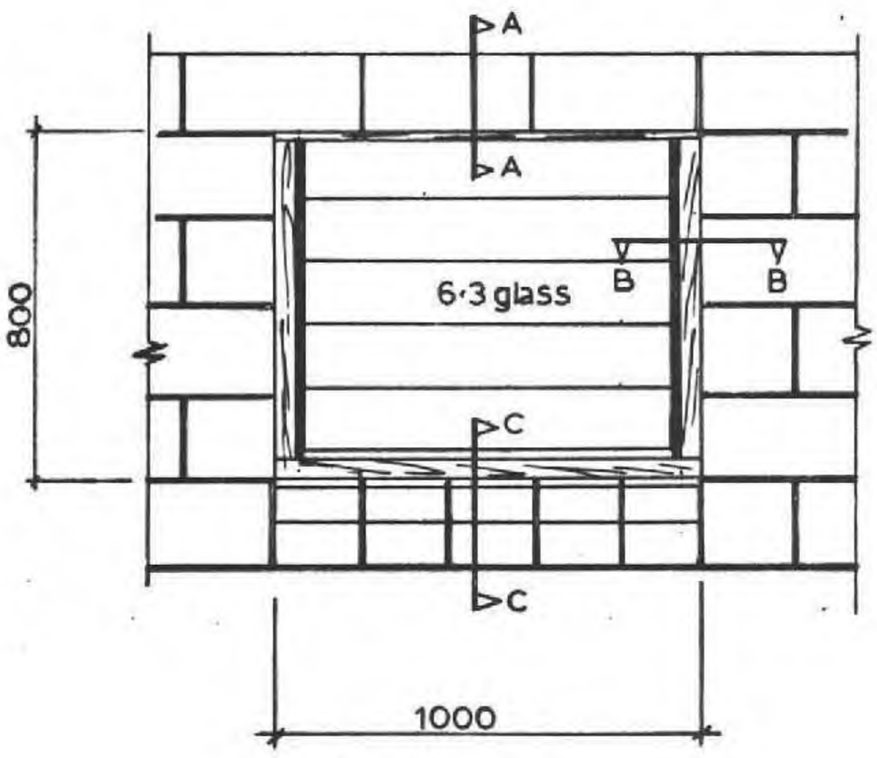

S 1:25

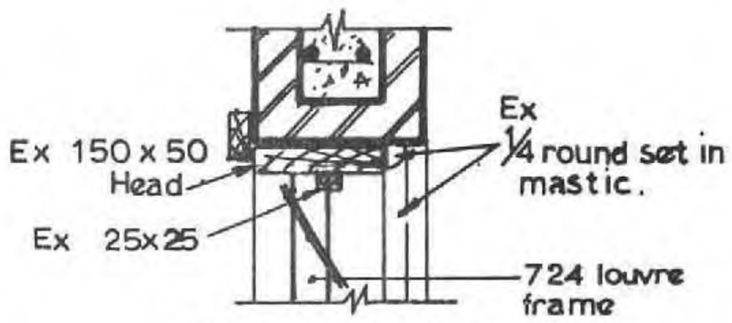

SECTION A-A

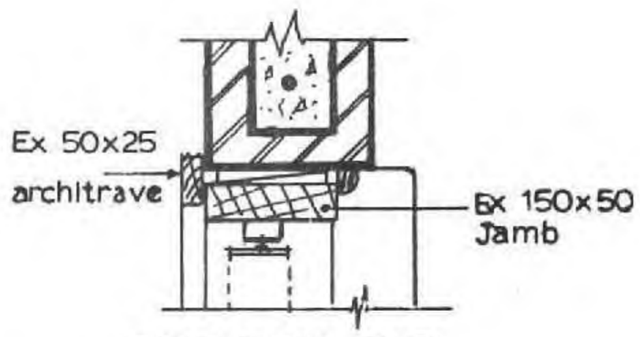

SECTION B-B

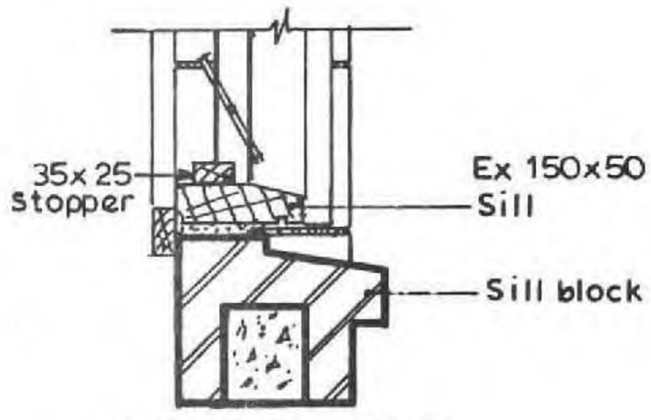

SECTION C-C

S 1:12·5

FARM DAIRY DESIGN SERVICE

Document Set ID: 411667
Version: 2, Version Date: 08/10/2015

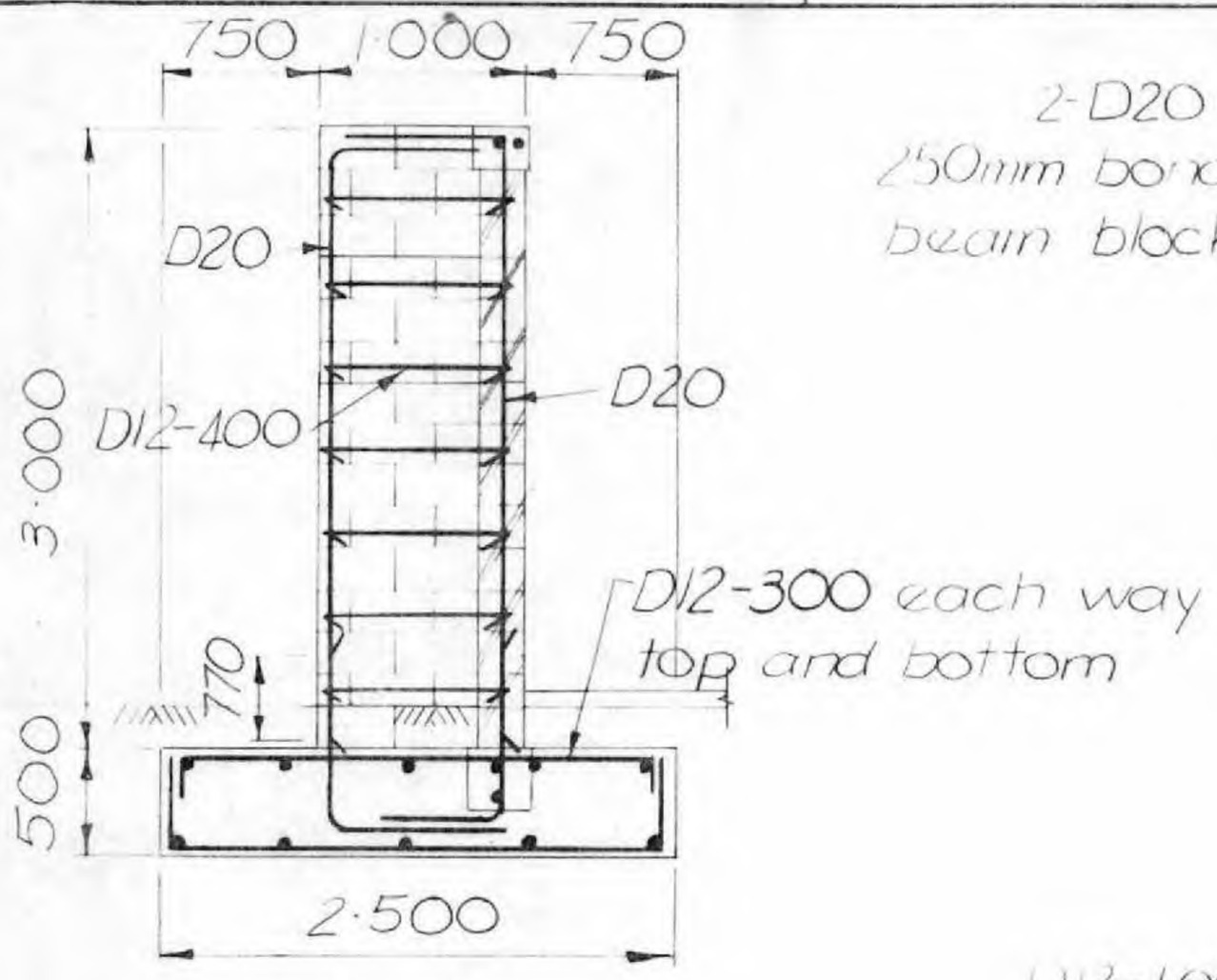

A-A 1:50

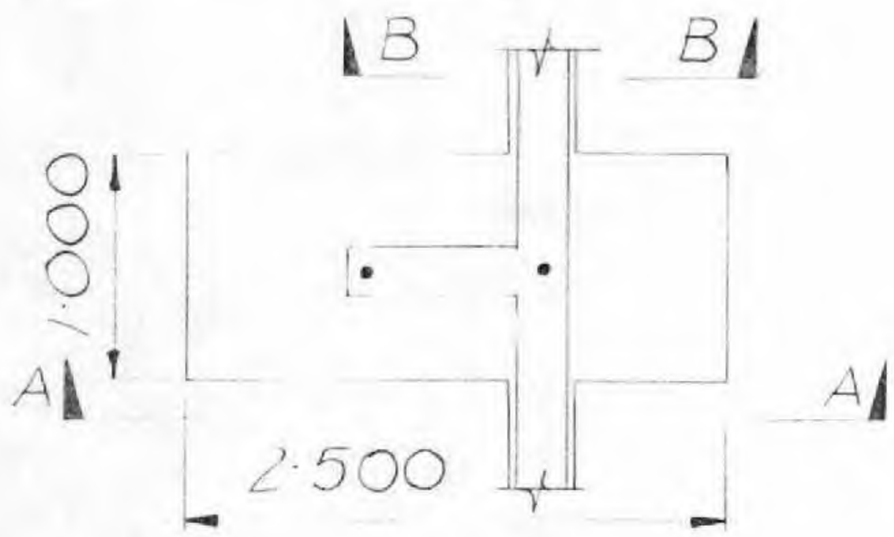

PLAN 1:50

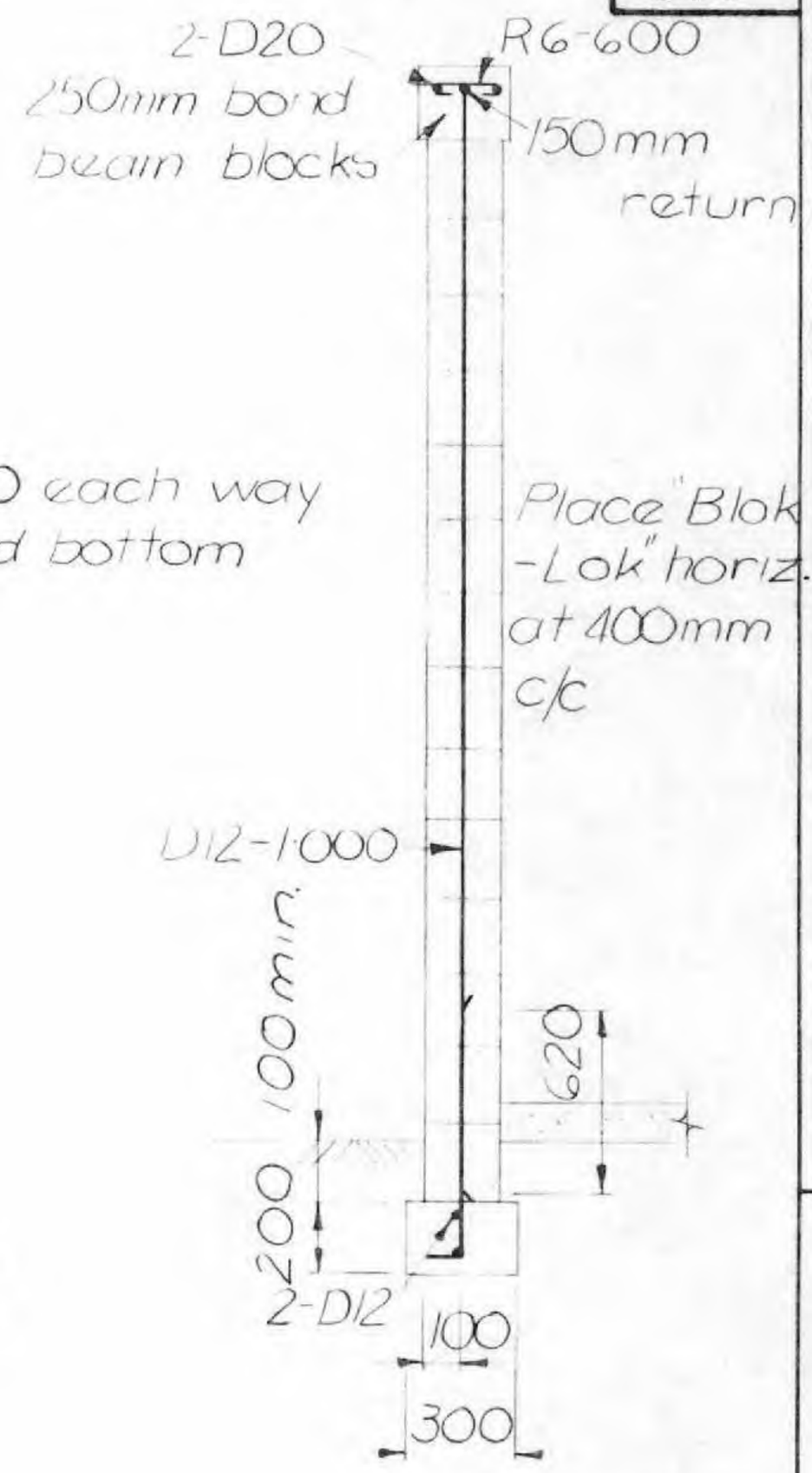

B-B 1:25

Approved: 2/77
R.L. Williams (Dist.
Struct. Eng. M.W.D.
Hamilton)

Return walls to be at max.
of 5·000 spacing

Herringbone Wall (Any Length)

FARM DAIRY DESIGN SERVICE

Document Set ID: 411667
Version: 2, Version Date: 08/10/2015

Revisions: A 2/77

Ministry of Agriculture & Fisheries

400

PURLINS

Timber Grade : No. 1 framing, treated to C8
Use 0.5 mm corrugated iron on 900 mm spacings.
Metal pan roofing or HT corrugated steel on 1800 mm spacings.

		SPANS (m)										
		0.9	1.2	2.0	2.4	2.5	2.7	3.0	3.3	3.7	4.0	4.3
Spacing (mm)	900	⊠50 x75	⊠75 x50	100 x50	100 x50	125 x50	125 x50	150 x50	150 x50	200 x50	200 x50	200 x50
	1800	⊠75 x50	100 x50	125 x50	150 x50	150 x50	150 x50	200 x50	200 x50	225 x50	250 x50	250 x50

Purlin spacing to be halved at the eves.

Basic design loads live: NZS 4203 (1976) Table 3
dead: 0.12 kPa
paint: 1 kN

Maximum deflection: $< 0.006 \times$ span (D + L)

GIRTS

Timber Grade : No. 1 framing treated to C8 (enclosed)
C7 (exposed)

		SPANS (m)					
		2.7	3.0	3.33	3.67	4.0	4.33
Spacing (mm)	750	100 x75	125 x75	125 x75	125 x75	150 x75	150 x100
	900	100 x75	125 x75	125 x75	150 x75	150 x100	150 x100
	1500	150 x75	NA	NA	NA	NA	NA

Basic design loads: 1.3 kPa (wind)

Maximum deflection: 0.006 x span

Approved: Date: 7/77
R.L. Williams
Dist. Struct. Engineer
MWD Hamilton

FARM DAIRY DESIGN SERVICE

Document Set ID: 411667
Version: 2, Version Date: 08/10/2015

MINIMUM RAFTER SIZES & SPACINGS (simply supported)

2

	401.
	DBB

Approved: RW Date.
R.L. Williams 12/76
Dist Struct Engineer
MWD Hamilton

1. TIMBER (Rafters)

Span m \ Spacing mm	900	1200
5·5	225×50	250×50
6·0	225×50	300×50

Timber Grade: No1 Framing, treated to C8.

2. R.H.S. (Rafters)

Span. m \ Spacing m	2·0	2·4	2·5	2·7	3·0
5·5	127×76×4·9	127×76×4·9	127×76×4·9	127×76×6·3	127×76×6·3
6·0	127×76×4·9	127×76×6·3	127×76×6·3	152×76×4·9	152×76×6·3
8·0	152×102×6·3	203×102×4·9	203×102×4·9	203×102×4·9	203×102×6·3
9·0	203×102×4·9	203×102×6·3	203×102×6·3	203×102×6·3	203×102×9·5
10·0	203×102×6·3	203×102×9·5	203×102×9·5	203×102×9·5	203×102×9·5
11·0	203×102×9·5	203×102×9·5	203×102×9·5	203×102×9·5	203×152×9·5
12·0	203×152×6·3	203×152×9·5	203×152×9·5	203×152×9·5	203×152×9·5
13·0	203×152×9·5	203×152×9·5	203×152×9·5	N.A.	N.A.

3. R.S.J. (Rafters)

Span m \ Spacing m	2·0	2·4	2·5	2·7	3·0
5·5	127×64×13	152×76×18	152×76×18	152×76×18	152×76×18
6·0	152×76×18	152×76×18	152×76×18	178×89×22	178×89×22
8·0	200 UB 25	200 UB 25	200 UB 25	200 UB 25	200 UB 25
9·0	200 UB 25	250 UB 31	250 UB 31	250 UB 31	250 UB 31
10·0	250 UB 31	250 UB 31	250 UB 31	310 UB 40	310 UB 40
11·0	310 UB 40	310 UB 40	310 UB 40	310 UB 40	310 UB 40
12·0	310 UB 40	310 UB 40	310 UB 40	360 UB 45	360 UB 45
13·0	310 UB 40	360 UB 45	410 UB 54	410 UB 54	410 UB 54

Basic design loads: 1·33 KN/m² (wind uplift) R.S.J. & RHS.
0·72 KN/m² max (D+L) Timber.
1 KN point load

Maximum deflection: 0·005 × Span (D+L)

FARM DAIRY DESIGN SERVICE

Document Set ID: 411667
Version: 2, Version Date: 08/10/2015

Ministry of Agriculture & Fisheries

	402
1:50	

PURLIN AND GIRT CLEAT DETAILS AND STIFFENER DETAILS

Approved: Date: 7/77
R.L. Williams, District
Struct. Eng. MWD Hamilton

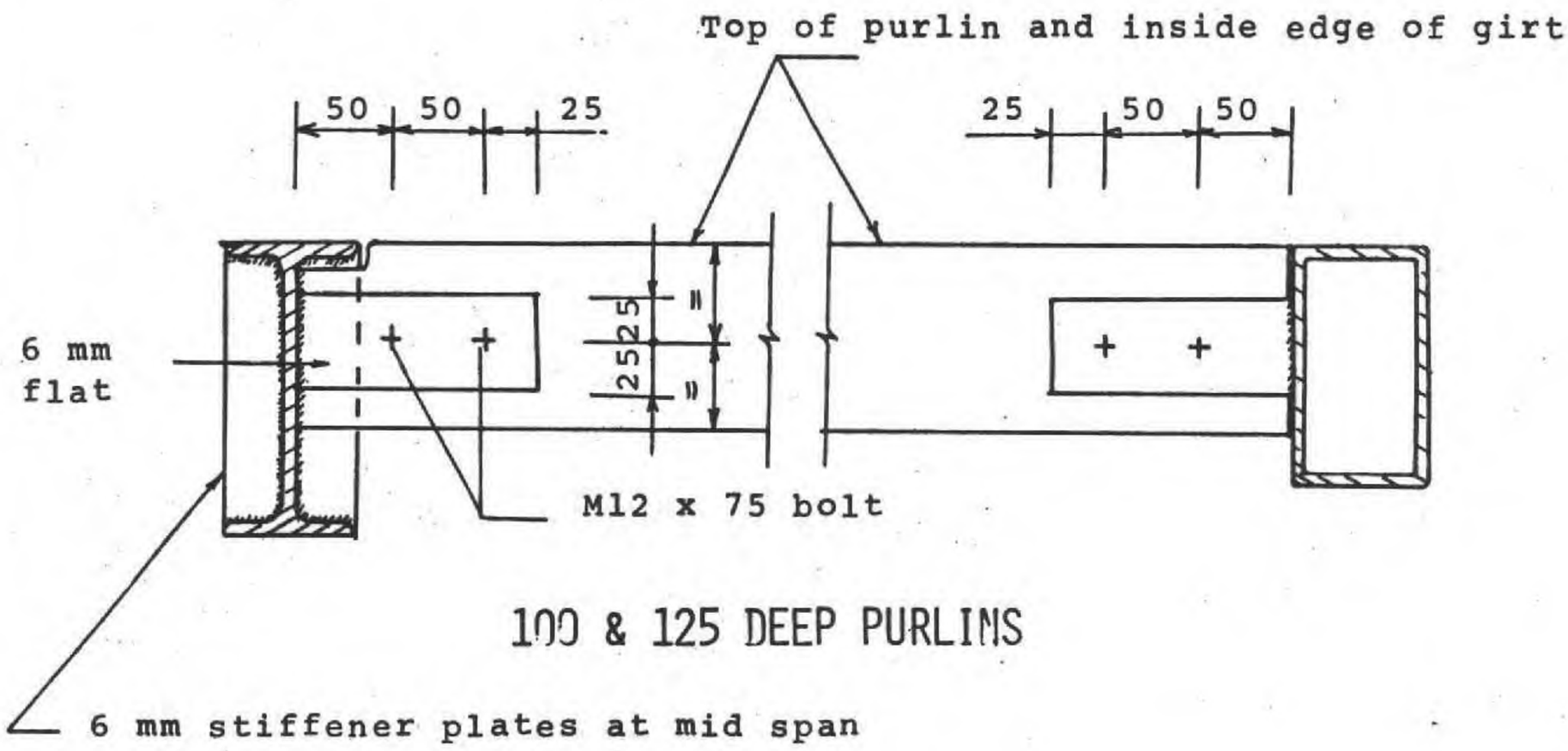

100 & 125 DEEP PURLINS

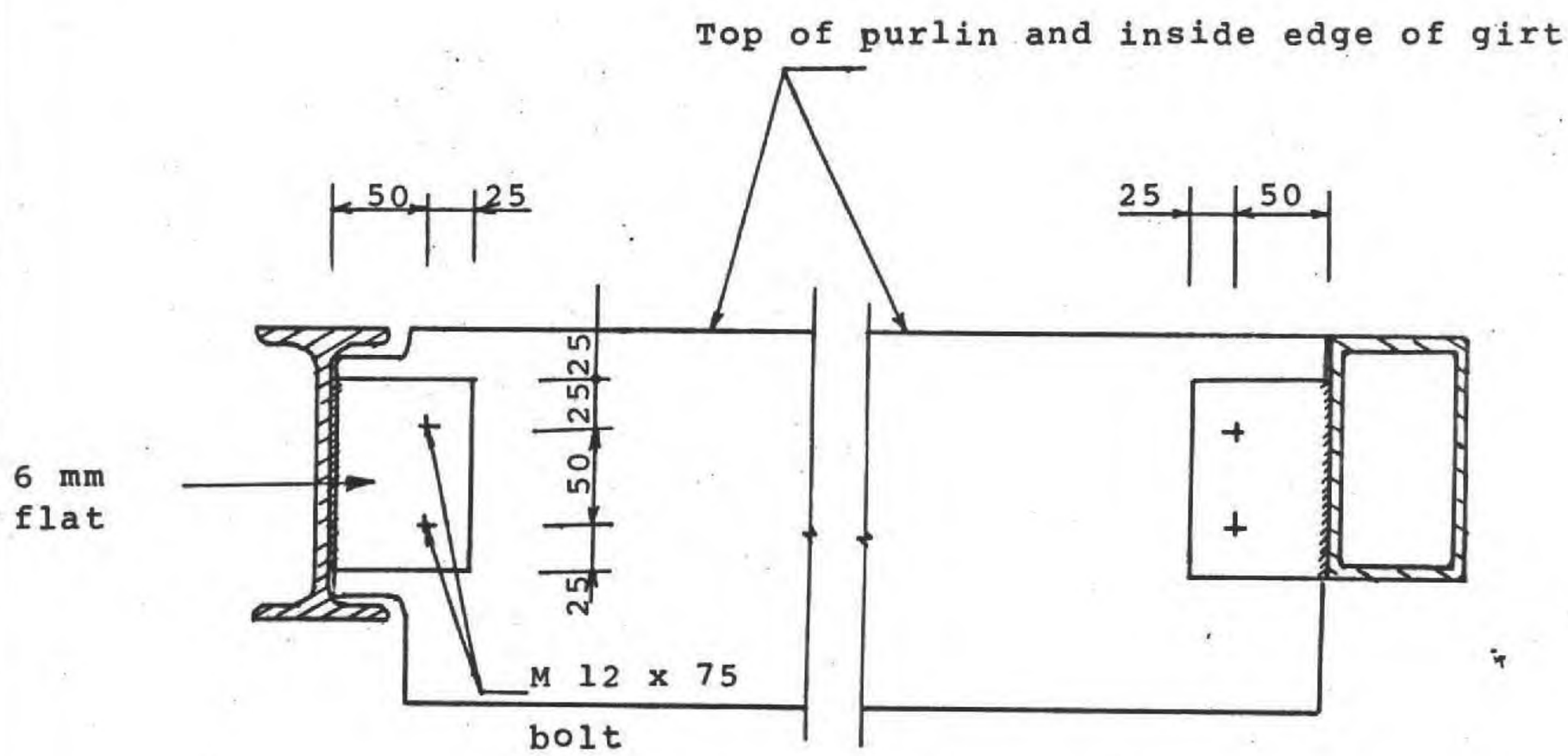

150 & 200 DEEP PURLINS

NOTE: Purlins and girts cut in to allow flush fitting of claddings

FARM DAIRY DESIGN SERVICE

Document Set ID: 411667
Version: 2, Version Date: 08/10/2015

	495
~~1:5~~ 1:20	

Ministry of Agriculture & Fisheries

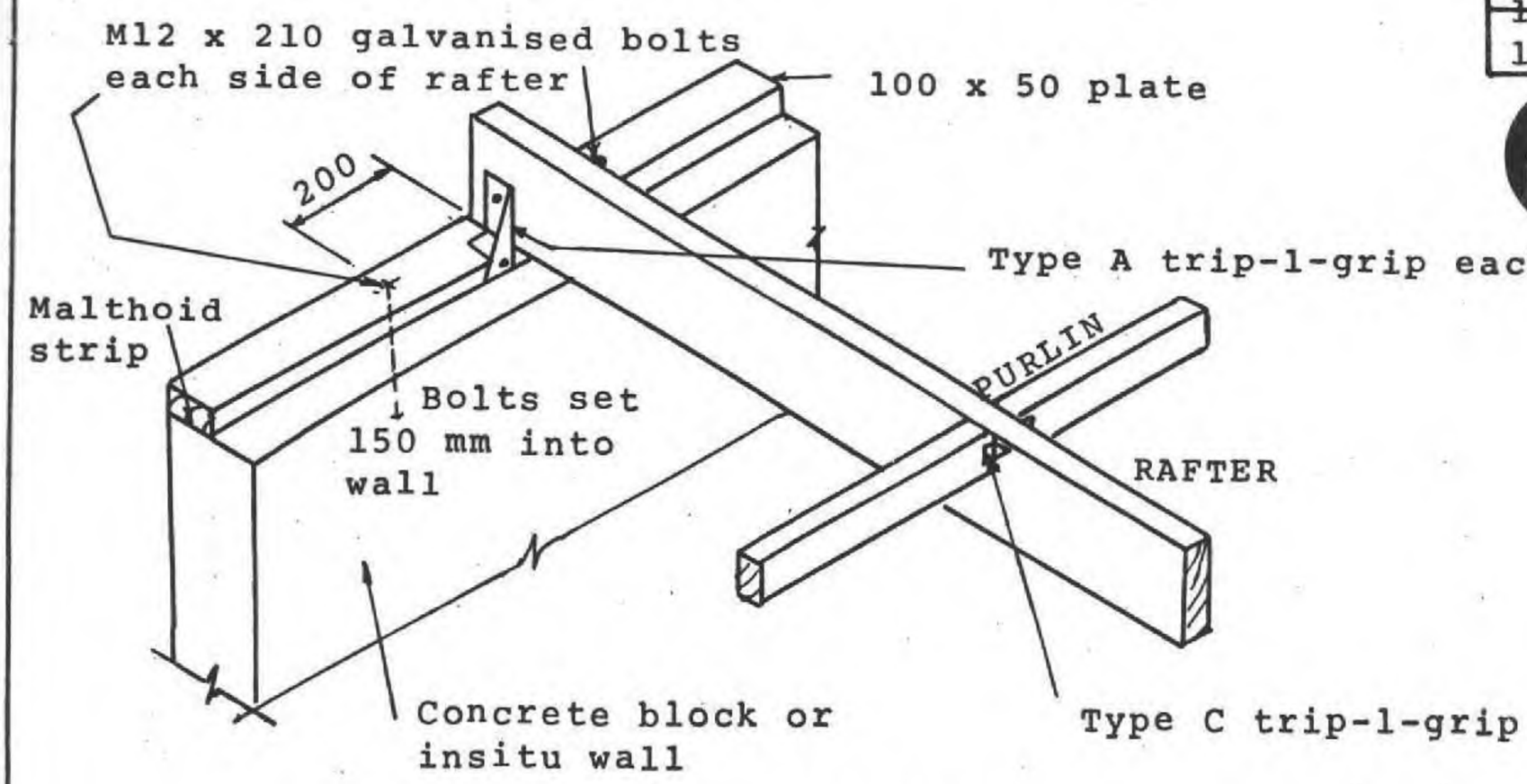

TIMBER
Scale 1:20

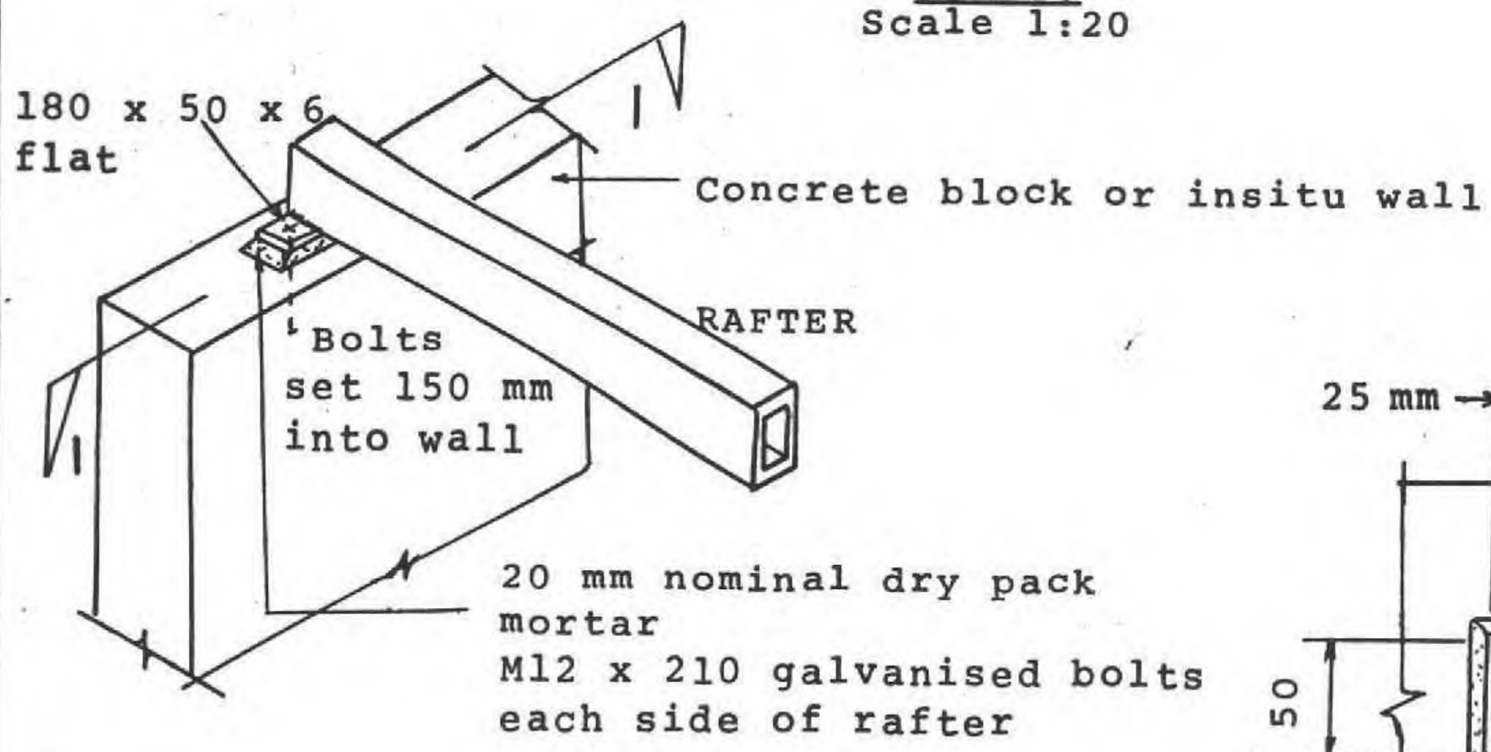

RHS
Scale 1:20

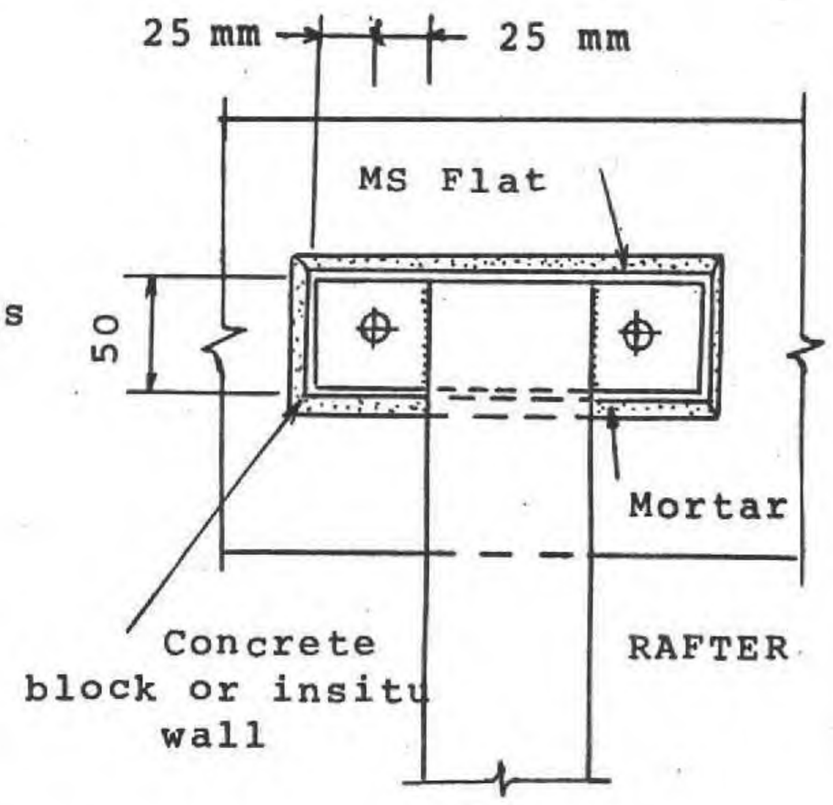

1-1
Scale 1:5

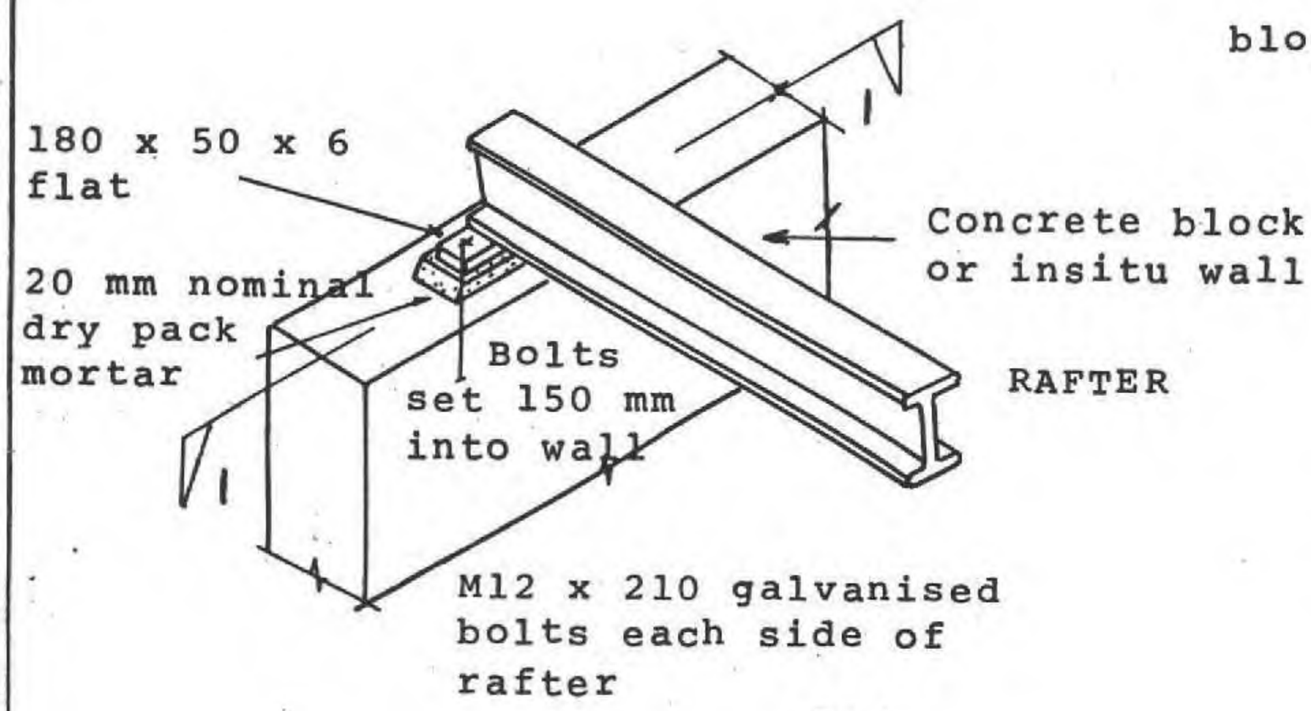

RSJ
Scale 1:20

Approved Date 7/77
R.L. Williams
Dist. Struct. Engineer
MWD Hamilton

RAFTER-CONCRETE WALL CONNECTIONS
HERRINGBONE

FARM DAIRY DESIGN SERVICE

Document Set ID: 411667
Version: 2, Version Date: 08/10/2015

Ministry of Agriculture & Fisheries

	405
1:20	

RAFTER SUPPORTS
(RAFTERS AND POSTS AT 2.7 M CENTRES)

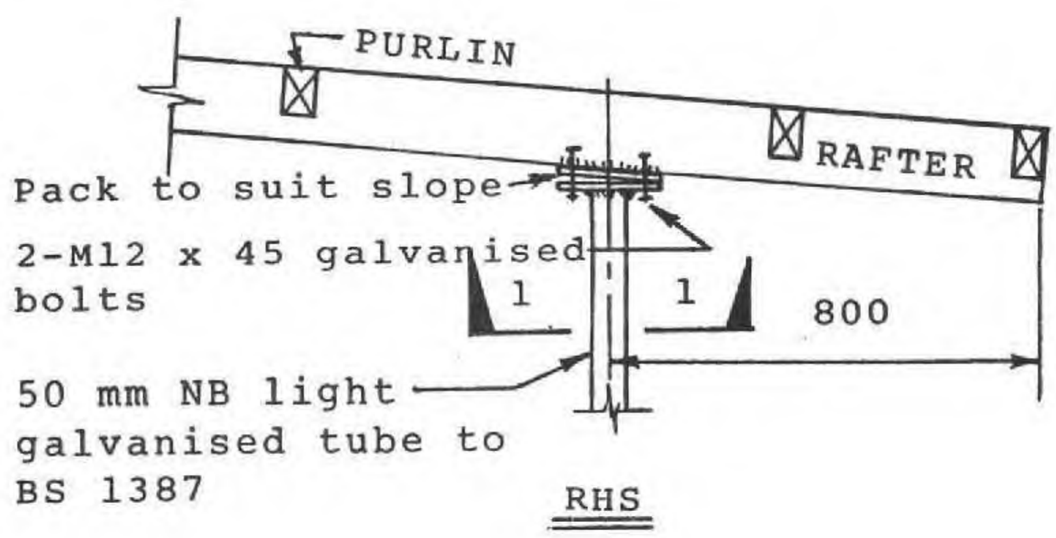

RHS

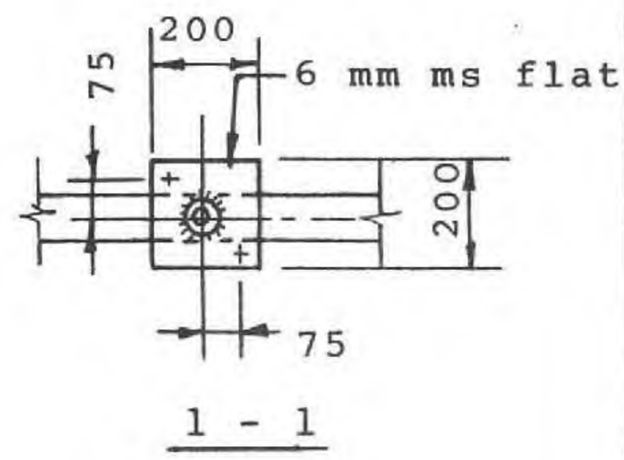

1 - 1

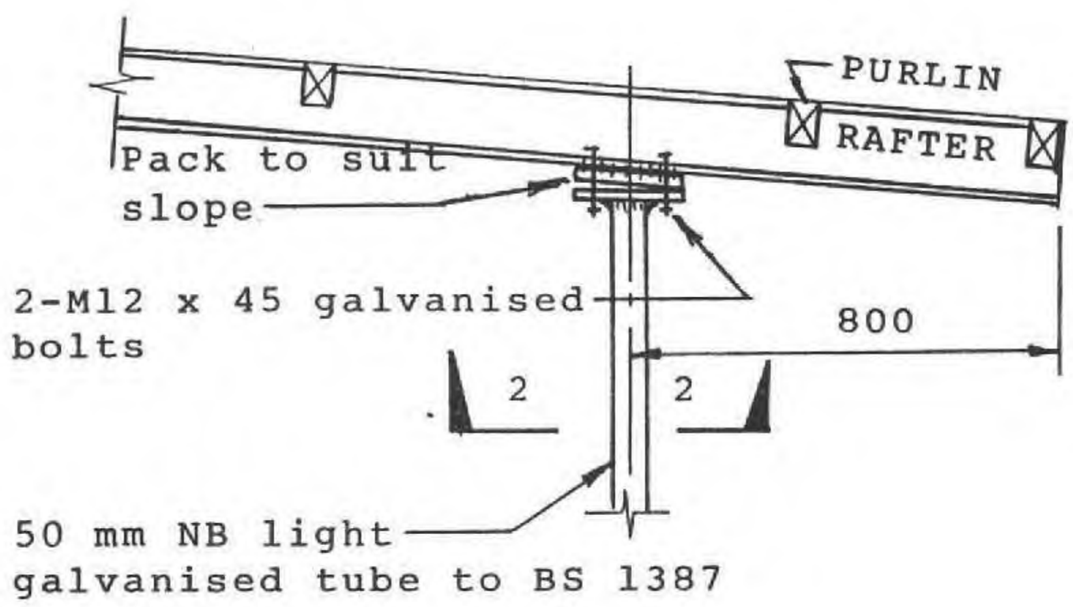

RSJ

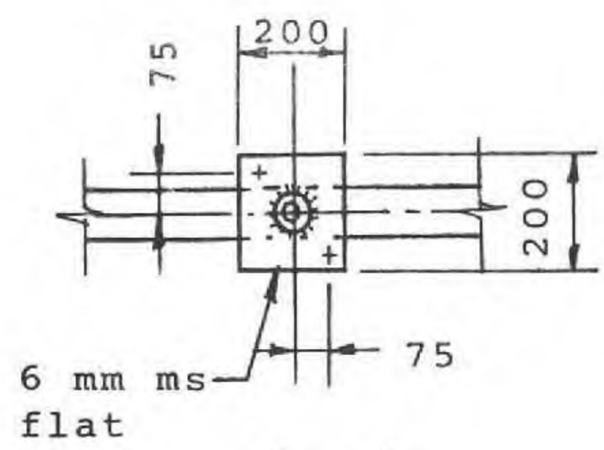

2 - 2

NOTE For purlin connection sheet 402

Approved: Date 23/8/77
R.L. Williams
Dist. Struct. Engineer
MWD, Hamilton

FARM DAIRY DESIGN SERVICE

Document Set ID: 411667
Version: 2, Version Date: 08/10/2015

Ministry of Agriculture & Fisheries

	406
1:10	

POST FIXING DETAILS (2.7 M CENTRES)

NOTE: Footing designed for a max. safe bearing pressure of < 50 kPa (uplift governs)

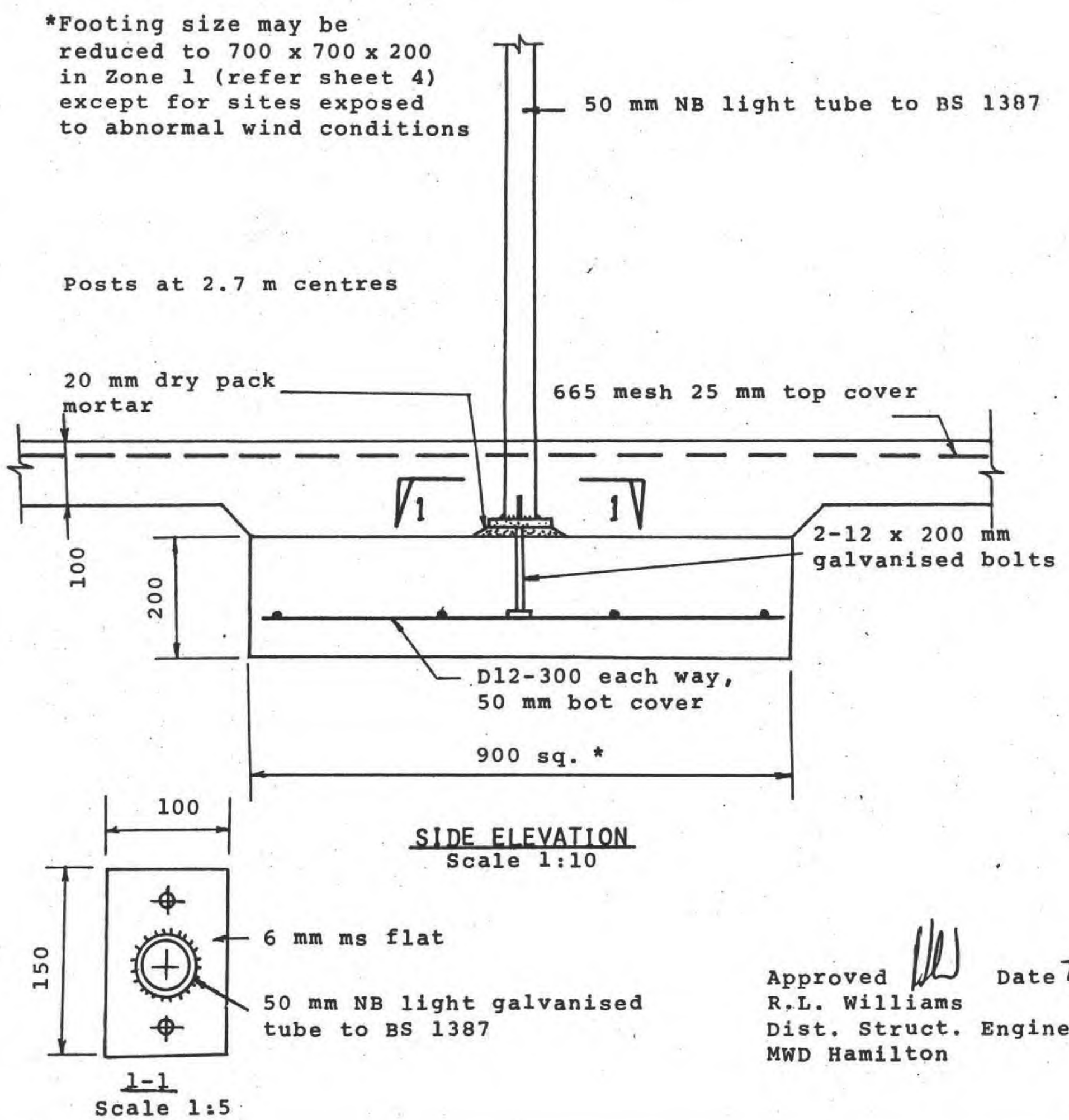

Approved Date 7/77
R.L. Williams
Dist. Struct. Engineer
MWD Hamilton

FARM DAIRY DESIGN SERVICE

Document Set ID: 411667
Version: 2, Version Date: 08/10/2015

RAFTER CONCRETE WALL CONNECTIONS

Ministry of Agriculture & Fisheries

	418
Dimensions In mm	

Approved Date 7/77
R.L. Williams, Dist. Struct. Engineer, MWD Hamilton

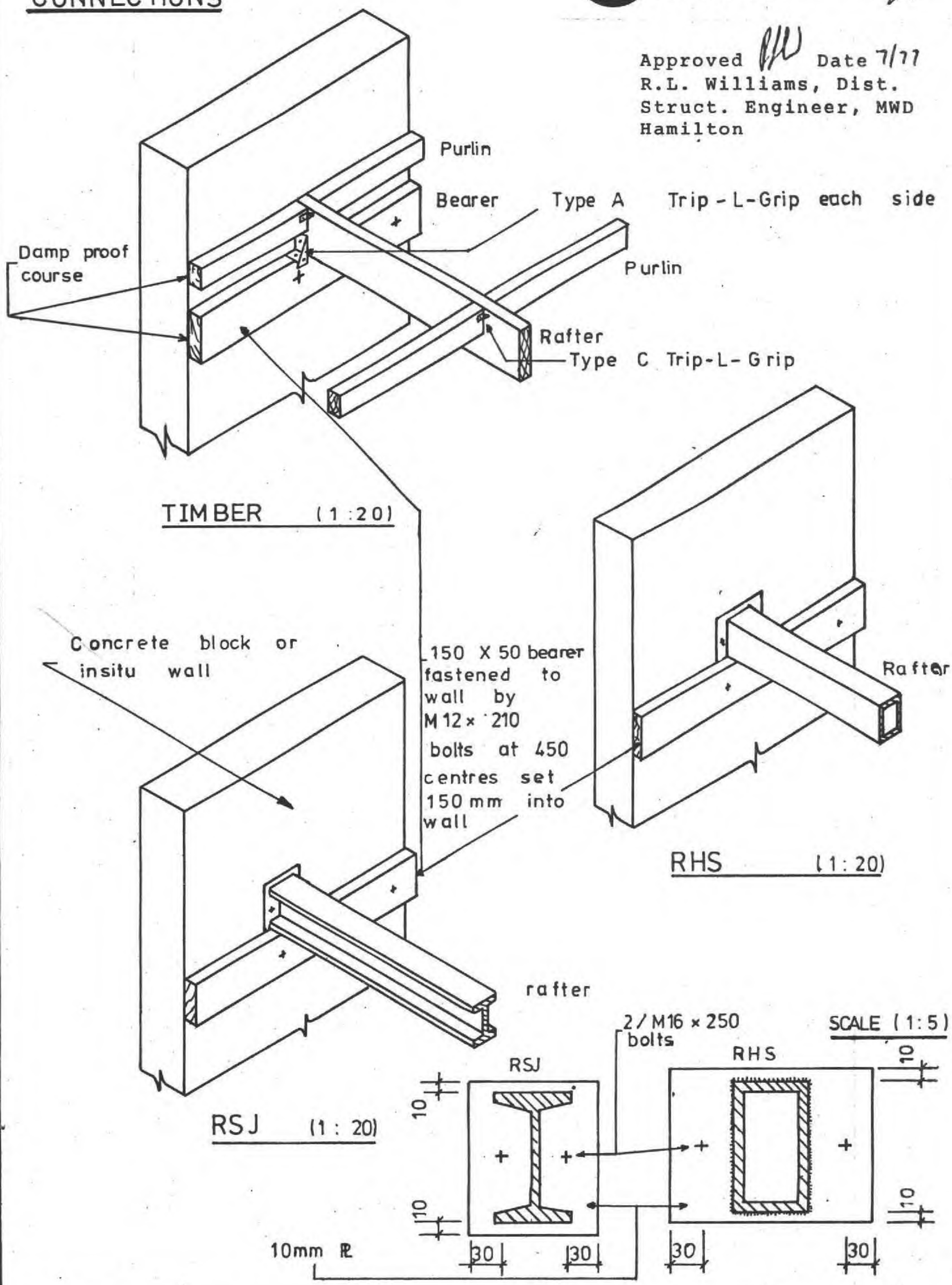

FARM DAIRY DESIGN SERVICE

Document Set ID: 411667
Version: 2, Version Date: 08/10/2015

24 Images

BUILDING CONSENT

5433A

PROPERTY ID **005877**

5433A

Document Set ID: 613880
Version: 1, Version Date: 08/10/2001

NEW PLYMOUTH DISTRICT COUNCIL

Code Compliance Certificate No:2371
Section 43(3), Building Act 1991

Building Consent No: 5433

OWNER : MR KL & DE HARVEY

Mailing Address: 53 PLYMOUTH ROAD RD4, NEW PLYMOUTH
Phone: 7527448 (Bus.) 7527458 (Pvt.)
Contact:
Mailing Address:
Application received:

PROJECT LOCATION

Street Address: 195 PLYMOUTH ROAD, OMATA
Property ID: 005877
Assessment No: 11631/133.00
Legal: PT SEC 161 DP 2636 LOT 1 DP 16942 PT SEC 160 OAKURA DIST BLK I E

PROJECT

The project is for New building
Intended Use(s): residential
Intended life: Indefinite but not less than 50 years

COUNCIL CHARGES

The Council's total charges payable on the uplifting of this code compliance certificate in accordance with the attached details are: $0.00

This is a final code compliance certificate issued in respect of all of the building work under the above building consent

1: Code Compliance Certificate Cond.

No Special Conditions

Approving Officer ..CModica.....

Date ..14../..8../..95

LIARDET STREET PRIVTE BAG 2025 NEW PLYMOUTH 4620 NEW ZEALAND
TELEPHONE (06) 759 6060 FAX (06) 759 6118

Document Set ID: 613880
Version: 1, Version Date: 08/10/2001

Building Consent No:5433
Section 35, Building Act 1991

Issued:30Aug94

OWNER : MR KL HARVEY
53 PLYMOUTH ROAD RD4
NEW PLYMOUTH

Phone: 7527448 (Bus.)
7527458 (Pvt.)

Application received:

PROJECT LOCATION

Street Address: 195 PLYMOUTH ROAD, OMATA
Property ID: 005877
Assessment No: 11631/133.00
Legal: PT SEC 161 DP 2636 LOT 1 DP 16942 PT SEC 160 OAKURA DIST BLK I E

PROJECT

The project is for New building
Intended Use(s): residential
Intended life: Indefinite but not less than 50 years
Value of Work: $6,000.00

COUNCIL CHARGES

The Council's total charges payable on the uplifting of this building consent in accordance with the attached details, are: $0.00

Receipt number: 1782 Date: 30Aug94 Amount: $129.00

1: CONDITIONS APPLYING TO THIS BUILDING CONSENT:

Bracing is to be provided in the walls.

2: CONDITIONS OF ISSUE:

This Building Consent is issued under the Building Act 1991. The project may be undertaken in accordance with the approved plans, specifications and any conditions specified. Duties and responsibilities under any other Act are unaffected by this consent.

6

Document Set ID: 613880
Version: 1, Version Date: 08/10/2001

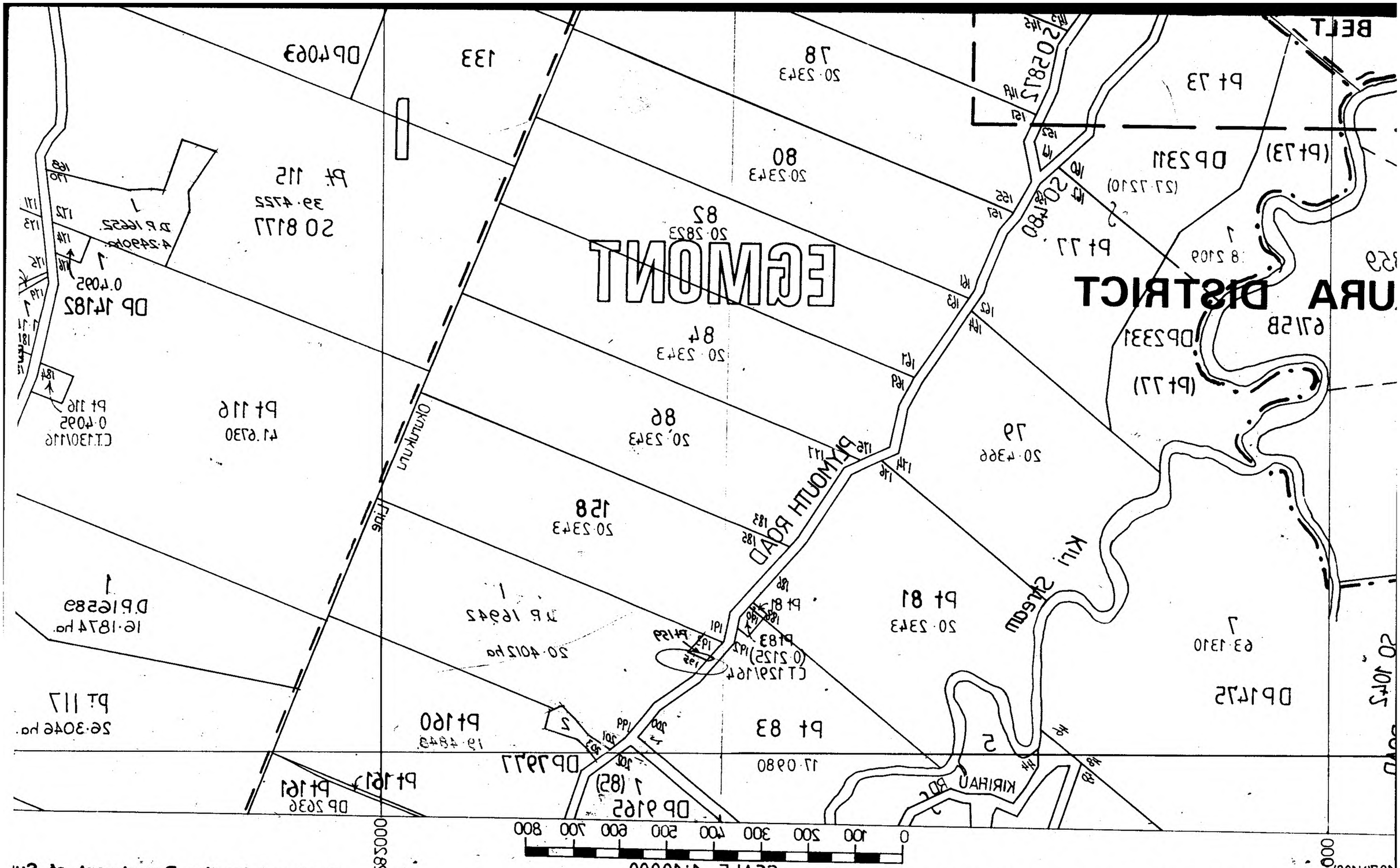

Document Set ID: 613880
Version: 1, Version Date: 08/10/2001

POWERED BY

ownly

Licensed REAA 2008

move.

darrell paterson

OWNER & SALESPERSON

027 493 7134
darrell@bestmove.co.nz
bestmove.co.nz

riley blair

SALES ASSOCIATE TO DARRELL PATERSON

027 441 6308
riley@bestmove.co.nz
bestmove.co.nz