move.

council records

26 bayly road
moturoa

Statement of Passing Over:

This information has been supplied by the vendor or the vendor's agents and move (powered by ownly Ltd licensed REAA 208) is merely passing over this information as supplied to us. We cannot guarantee its accuracy as we have not checked, audited, or reviewed the information and all intending purchasers are advised to conduct their own due diligence investigation into this information. Where you have been supplied with a Council Property File or a LIM Report, please note there may be matters relating to pre-1992 consents or permits in this file which may need further investigation in order to determine their relevance. To the maximum extent permitted by law we do not accept any responsibility to any party for the accuracy or use of the information herein.

- Natural Source
- Treatment Plant
- Pumpstation
- Storage Unit
- Hydrant
- Manhole
- Alert Valve
- Air Valve
- Non-Return Valve
- Standard Valve
- Manifold Valve
- Backflow
- Meter
- Restricted Flow
- Wellup
- Inlet
- Outlet
- Soakhole
- End Point
- Node
- Misc Point
- Trunk
- Rise
- Main
- Lateral
- Open Drain
- Stream
- Overland Flow Path
- Misc Polygon
- Proposed Bund and Ponding Areas
- Storm Water Mgmt Plan

Yellow = Privately Owned

Grey = Out of Service/Closed

Stormwater

Water Supply

Waste Water

Te Kaunihera-ā-Rohe o Ngāmotu
New Plymouth District Council

COPYRIGHT: Cadastral information sourced from Land Information New Zealand data. Crown Copyright Reserved.

DISCLAIMER: NPDC assumes no responsibility for the completeness or accuracy of the data displayed on the plot. To be used for indicative purposes only.

HORIZONTAL DATUM
New Zealand Geodetic Datum 2000

MAP PROJECTION
New Zealand Transverse Mercator

0 5 10 20
m

MILES Print Map

Date: 10/03/2026

1:282

16mm 35mm

BUILDING FILE

Code No. 4L/26

Subject DWL

No. Sheets 1

Permit No 1286

Date 30-3-49

Document Set ID: 414741
Version: 1, Version Date: 18/11/2004

41/26

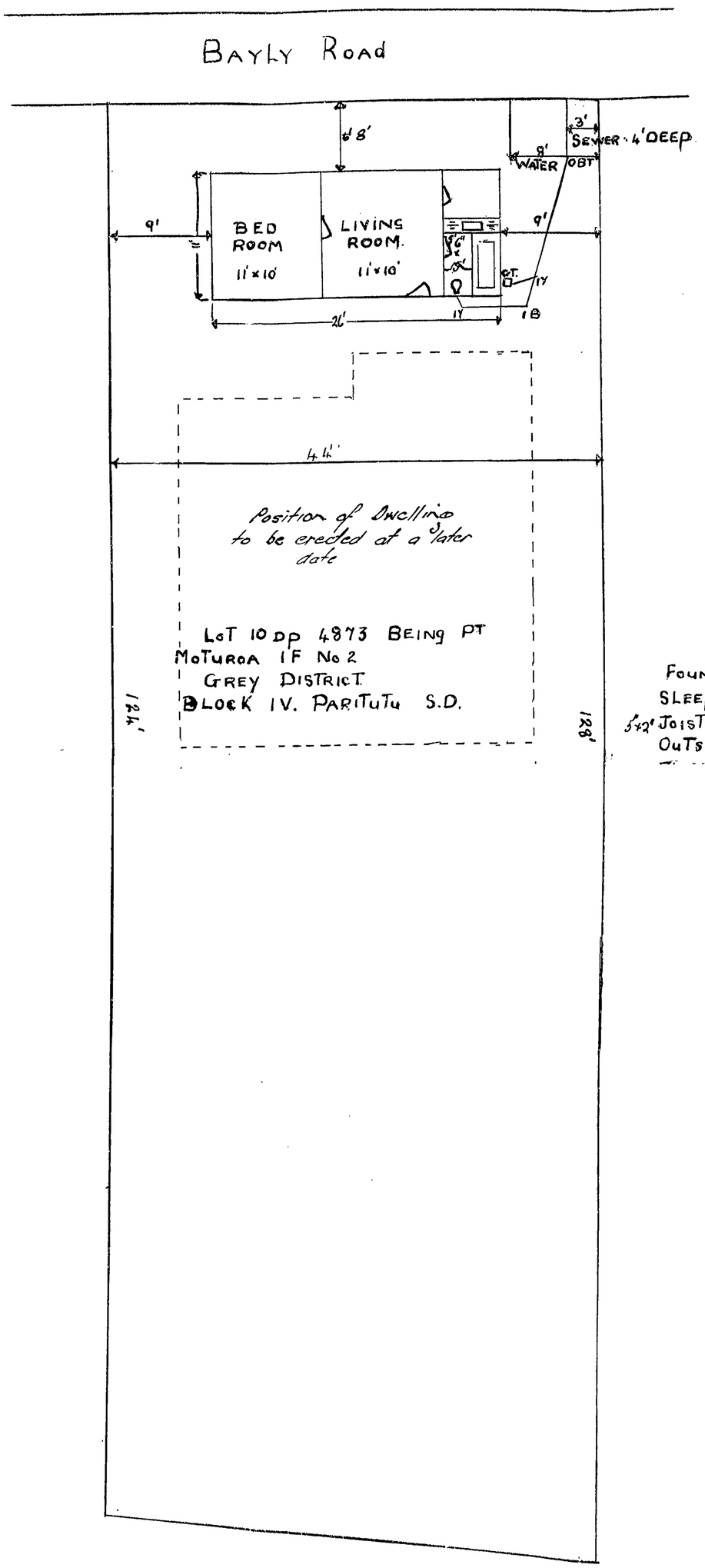

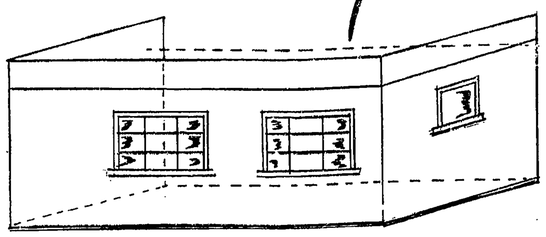

Temporary Accommodation
PROPOSDED ~~RESIDENCE~~ FOR
MR T. ALLAN.
26 BAYLY RD.

FOUNDATION TO BE CONCRETE PILES.
SLEEPERS - 4" x 3"
5"x2" JOISTS, FRAMING, ETC - 4" x 2"
OUTSIDE WALLS + ROOFING : FIBROLITE. ASBESTOS.

A.K.T.
2/11/45

PLANS EXAMINED
2nd Nov

16mm 35mm

BUILDING FILE

Code No. 41/26

Subject DWL/ Found. Log Fire

No. Sheets 17

DWL 1559
Foundation 1286

Permit NO 25556

DWL 13-9-49
Foundation 30-3-49
Log fire 8-6-84

Date

Document Set ID: 414740
Version: 1, Version Date: 29/10/2004

NEW PLYMOUTH CITY COUNCIL

6 49

CITY ENGINEER'S DEPARTMENT — ASSESSED REQUIREMENTS

File No. 6 49

Project: LOG FIRE — Check Sheet No. 25556

Owner: T. ALLAN — Sewer Sheet No. _____ Plotted: _____

Address: 26 BAYLY RD — Zone: _____

Lot No. _____ D.P. _____ Sec. No. _____ Area of Site: _____

41/26

PLANS TO BE ENGROSSED ON 1976

TOWN PLANNING

Designations

Area of Buildings

Coverage

Maximum Height

Front Yard

Relat. of Bldg. Size: (1) Rear Yard

(2) Side Yard

Open Space

Grassed Areas

Trees

Building Lines & Street Widening

Parking

Access to Rear of Site

Accessory Buildings

Service Lanes & R.O.W.

Crossing Length

Gross Floor Area of Shops

Resid. Accom.

Levels of Site

Use of Yards

Loading

Screening

Amalgam. of Titles

Remarks:

Approved _____

Not Approved _____

Document Set ID: 414740
Version: 1, Version Date: 29/10/2004

S E R V I C E S

A : SEWER CONNECTION

Existing Service _____

Required Service _____

Location _____

Depth _____

Special Requirement _____

Common Drain _____

Fee $_____

STORMWATER CONNECTION

_____

_____

_____

_____

_____

_____

Fee $_____

FEE $:

B : WATER CONNECTION

Existing Service _____

Distance from L/Boundary _____

Distance: Main to Boundary _____

Boundary to Load _____

Required Service _____

Meter _____

Height above Datum _____

FEE $:

C : PLUMBING

No. Fittings W.Cs 3 ___ Baths 2 ___ Basins 1 ___ Sinks 2 ___ Showers 2 ___ Tubs 2 ___ Others ___

Total Values _____

Supply Pipe Sizes _____ P.V.C. ☐ Copper ☐ Gal. Iron ☐

Backflow Prev. _____

Other Fittings _____

Estimated Value _____ Plumbing Fee _____

DRAINAGE

Existing _____ Required _____

Fittings Required _____

Common Drain _____

Septic Tank _____

Stormwater _____

Estimated Value _____ Drainage Fee _____

Total Estimated Value P. & D. $ ___ : __ FEE $ /:

D : VEHICULAR CROSSINGS

Type of Footpath _____ Condition _____

Kerb & Channel _____

Existing Crossing _____

New Crossing _____ Position _____

Strengthen Path Sq.Yds. _____ Level at Boundary _____

STREET WORKS FEE $: **DEPOSIT DAMAGE FEE $:**

Document Set ID: 414740
Version: 1, Version Date: 29/10/2004

REMARKS : CORRESPONDENCE : AGREEMENTS
SPECIFIC REQUIREMENTS

41/26

Approved
Not Approved

Approved
Not Approved

Rec 13/10/84

Approved
Not Approved

Approved
Not Approved

Approved
Not Approved

Document Set ID: 414740
Version: 1, Version Date: 29/10/2004

E : HEALTH & BY-LAWS

Areas _____

Light _____

Ventilation _____

Remarks: _____

41/26

Approved _____

Not Approved _____

F : DANGEROUS GOODS

Domestic or Commercial _____

Storage Capacity & Location _____

Licence Required _____ Yes/No _____

Approved _____

Not Approved _____

G : BUILDING

Remarks:

FEES:		
Bldg.	$1000.00	17.00
Water Bldg.		
B.R.L.		
TOTAL		$ 17.00

Building Inspector _____

Approved _____

Not Approved _____

Specification: _____

Structural Engineer _____

Approved _____

Not Approved _____

Fire Service _____

Recommended _____

Not Recommended _____

PERMIT NO. 6514

APPROVING ENGINEER

Approved _____ 14/6/84

Not Approved _____

Document Set ID: 414740
Version: 1, Version Date: 29/10/2004

4/26

NEW PLYMOUTH CITY COUNCIL

6 49

FOR OFFICE USE: File No. _____ Check Sheet No. 2555p

Receipt No. 3124 Sewer Sheet No. _____

Date of Receipt 27.6.84 Zone _____

TO THE CITY ENGINEER 12 JUN 84 Date 8-6-84

APPLICATION FOR BUILDING PERMIT Lot No. _____

At (House No.) 26 BAYLY RD. D.P. _____

For erection of LOG FIRE Sec. No. _____

OWNER MR. T. ALLAN ADDRESS 26 BAYLY RD.

Proposed Use HEATING

Foundation _____ Walls _____ Roof _____

AREA of Site _____

AREA of existing buildings _____ M^2

AREA of existing accessory buildings _____ M^2

AREA of Building in application _____ M^2

Builder CLELANDS WOOD STOVE SHOP 477 DEVON ST. EAST PH. 80-369 NEW PLYMOUTH Address CLELANDS WOOD STOVE SHOP 477 DEVON ST. EAST PH. 80-869 NEW PLYMOUTH

Designer _____ Address _____

Structural Eng. _____ Address _____

Building Projects Authority Required Yes / No Supplied Yes / No

		FOR OFFICE USE Corrected Value	Fees
Total Value of Building	$ 1000.		
Sanitary Plumbing and Drainage (Labour only)	$		
Value of Building for Permit	$		
Water for Building			
Building Research Levy on	$		
Hoardings Mths @			
		TOTAL FEES BUILDING	

Starting Date 21/06/84 Finishing Date 23/06/84

NAME AND ADDRESS OF APPLICANT

CLELANDS WOOD STOVE SHOP 477 DEVON ST. EAST PH. 80-869 NEW PLYMOUTH Phone

Signature of Applicant _____

Signature of Owner _____

Document Set ID: 414740
Version: 1, Version Date: 29/10/2004

41/26

49

12 JUN 1989

MODEL: LOG FIRE FOR:-

NAME: MR. TREVOR ALLAN.

ADDRESS: 26 BAYLY R.D

N.P.

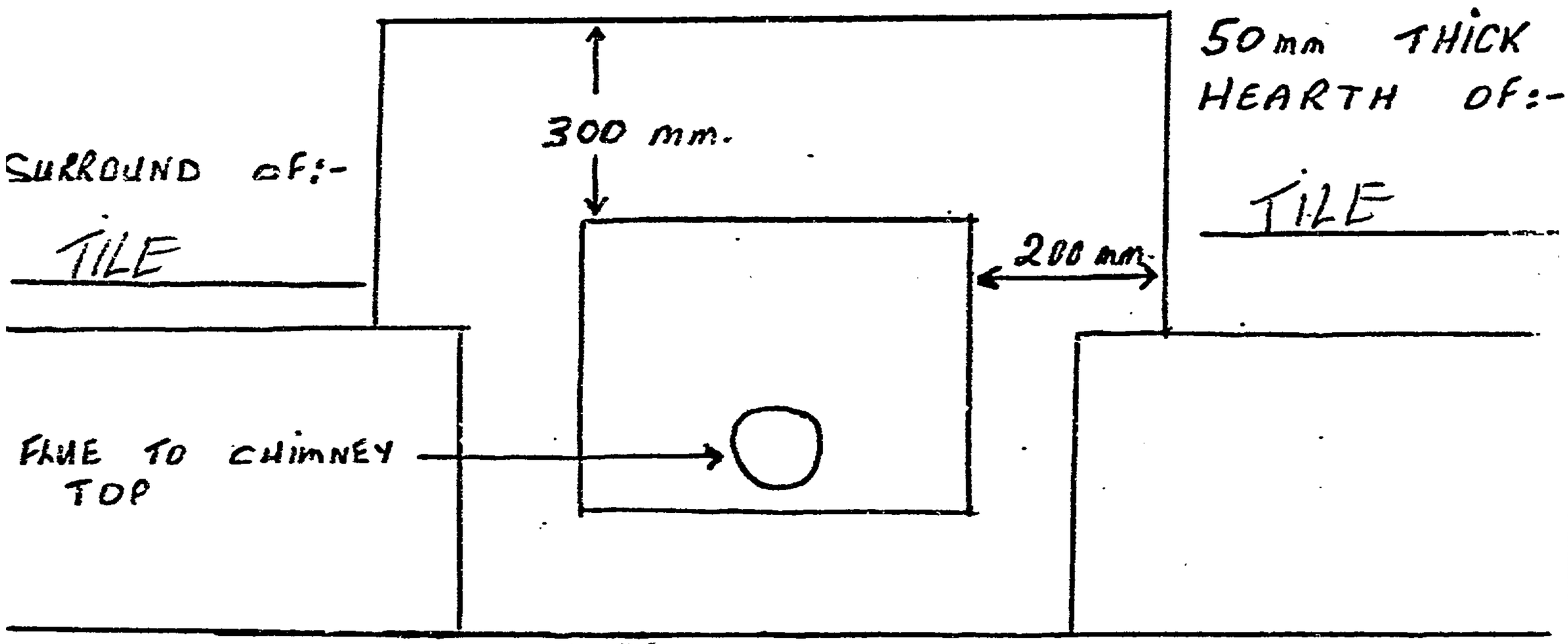

EXISTING CHIMNEY

PLANS AND SPECIFICATIONS APPROVED FOR TYPE OF USE, SITING, COVERAGE AND CONSTRUCTION, AS IN ACCORDANCE WITH THE DISTRICT SCHEME, REGULATIONS AND BY-LAWS ADMINISTERED BY THE NEW PLYMOUTH CITY COUNCIL

	DATE
TOWN PLANNING	14/6/89
PUBLIC HEALTH	12/6/89
BUILDING	
ENGINEER	

THESE PLANS AND SPECIFICATIONS ARE THE PROPERTY OF THE NEW PLYMOUTH CITY COUNCIL AND MUST BE KEPT ON SITE.

VETTING TO BE COMPLETED BY 19/6

Document Set ID: 414740
Version: 1, Version Date: 29/10/2004

BUILDING INSPECTOR'S FIELD SHEET

AUTHORITY

NEW PLYMOUTH CITY COUNCIL

Stats. No. B 064514

No. 6/0 25556

Inspector: M

File No. 6/49/84

Receipt No. 51241

Date Permit Issued 27/6/84

OWNER

Name: THELLIN

Mailing Address: 26 BAYLY ROAD, NEW PLYMOUTH

BUILDER

Name: G J LELAND & SONS LTD

Mailing Address: PO BOX 3121, NEW PLYMOUTH

80869

4/26

PROPERTY ON WHICH BUILDING IS TO BE ERECTED/~~DEMOLISHED~~

SITE

Street No.: 26

Street Name: BAYLY ROAD

Town/District: NEW PLYMOUTH

Riding:

LEGAL DESCRIPTION

Valuation Roll No.:

Lot: D.P.:

Section: Block:

Survey District:

DESCRIPTION OF PROPOSED WORK AND MAIN PURPOSE OF USE

DWELLING — RECLADDING

FLOOR AREA

Whole Sq. Metres:

DWELLING UNITS

Number Erected:

ESTIMATED VALUES $

Building:

Plumbing:

Drainage:

TOTAL: 1000.00

NATURE OF PERMIT (TICK BOX)

- [ ] NEW BUILDING – include dwelling added, exclude domestic garages
- [ ] FOUNDATIONS ONLY
- [x] ALTERED, REPAIRED, EXTENDED – include conversions and resited buildings
- [ ] NEW CONSTRUCTION OTHER THAN BUILDINGS – include demolitions
- [ ] DOMESTIC GARAGES AND DOMESTIC OUTBUILDINGS

FEES APPLICABLE

Building Permit	$	Water Connection	$
Street Damage Deposit	$	Vehicle Crossing Levy	$
Building Research Levy	$	M.S. Plumbing	$
Plumbing	$		$
Drainage	$		$
Sewer Connection	$	TOTAL:	$

Receipt No.:

Date of Payment: 27/6/84

Authorised Officer: [signature]

Special Conditions: Complete

Date Inspected	REMARKS (e.g. stage reached with work)

(CONTINUED OVER)

Document Set ID: 414740
Version: 1, Version Date: 29/10/2004

41/26

MR T. ALLAN
26 BAYLY RD
NEW PLYMOUTH

SPECIFICATION OF LABOUR AND MATERIALS.

required in the erection of a Residence for:-

Contractor's Conditions. The Contractor shall perform this work in a thorough tradesmanship like manner and in all respects in accordance with the drawing and specification of the owner.

Worker's Compensation. The Contractor shall insure against all claims for damages arising from accident to workmen by proper and sufficient Accident Insurance. Contractor to take out Builders Risk Policy against fire.

Payments. At the rate of 75% of work done. Balance thirty-one days after completion of contract.

Permits. Contractor shall get all permits necessary for a complete job.

BRICKLAYER.

Erect single chimney with clinker brick face. Firebox to be built with firebricks and fitted with 16" Colonial grate. Flues to be 9x9, properly parged as work proceeds. Hearth to be raised with 3x2 bevelled curb and plastered red to match clinker brick work. Part of chimney above roof to be roughcast and finished on top with 9" flueline. Design to be approved by owner.

Copper. Provide 12 gallon steelcrete pumice copper with steel clad flues. Copper to be stood on solid concrete basis.

DRAINLAYER.

Sewerage. Lay 4" glazed earthenware drainpipes socketed and jointed in cement with all necessary Bucean Gulley Traps and fittings etc., to connect to the satisfaction of the Health Inspector.

CARPENTERS AND JOINERS.

All timber to be of the best of their respective classes. Nails to be of such length as to enter the second timber at least half their entire length.

Foundation. Build 6x6 concrete piles around building at not more than 4'6" apart and 6' between rows. Outside piles to have heart strips to carry 4x1 Rt. Matai or Rimu boards.

Sleepers. To be 4x3 Rt. Rimu secured to piles with No. 8 gauge Galv. wire and stapled down.

Damp Course. Place a piece of 3 ply malthoid between concrete and wood.

Floor Joists. To be 5x2 Rt. Rimu gauged to a uniform thickness and spaced at not more than 18" centres.

Dwangs. To be 2x2 where required.

Framing. Ordinary rimu walls shall be framed with 4x2 framing studs at 18" centres. Top and bottom plates 4x2, braces checked in flush with framing to be 6x1.

External Walls. Cover the whole of the exterior walls with ~~6x1 Rt. bevelled Rock weatherboards~~.

Ceiling Joists. To be 4x2 at not more than 18" centres. Ceiling to have stiffening plates 4x2 edge up centres of rooms.

Document Set ID: 414740
Version: 1, Version Date: 29/10/2004

41/26

Rafters. To be 4x2 spaced at not more than 18" centres for tiles and 3 ft. centres for aluminium to be properly tied and strutted to plates. Ridge board to be 9x1. Fix 2x1 O.B. tile pattern.

Soffits. Soffits to be square out from building trimmed with 2x2 between each rafter and lined with 4x½ T.G. & V. Lining, or fibrolite with 1½x1½ scotia in angles.

Gables. Form gables as shown on plan studded with 4x2 and bellcast with 4x1 soffits and covered with 6x1 Ht. Rimu or Matai B.B. weather-board.

Barges and Covers. Barges to be 9x1 shaped as shown on plan with 6x1 coverboards all heart timber and dressed four sides.

Matchlining. Matchline with 4x½ T.G. & V. O.B. dry lining the walls and ceilings of all cupboards and soffites.

Wash-house. Walls lined with Pinex board throughout.

Internal Angles. All internal angles to be finished with 1½x1½ scotia.

Flooring. Floor to be covered with 6x1 Ht. Rimu or Matai. Dry flooring well cramped up and double nailed with 2½" brads. Joints and bywood to be cleaned off. Verandah floors to be 4x1 B.Ht. Matai laid to a fall.

Inside Lining. The whole of the inside walls not matchlined to be covered with ⅜" fibrous plaster and fitted in and left smooth ready for papering.

Bathroom. To be fitted with fibrous plaster or pinex board throughout. Bottom dado to be in 4x4 tiled pattern. Ceiling to be finished with plaster battens and 3" cornice. Angles to have ¾x¾ angle bead fitted in 4x1 bevelled skirting.

Ceiling. To be covered with fibrous plaster of approved pattern to be fixed to joists and dwangs with 1" galv. clouts and battened with 1½" half round bead with 1½x1½ scotia in angles. Sitting room and bathroom to have ornamental plaster ceilings.

Sink Top. Fit 20x1 Ht. Rimu sink top in kitchenette with pot cupboard under

Kitchenette. To be lined with ½" pinex throughout. To have plywood finish flush cupboards as shown on plan and to contain set of two tip bins and two drawers. Doors fitted with butterfly hinges and cupboards with bar handles.

Shaving Cabinet. Build in shaving cabinet with mirror front panel door. Electric light to be hung over mirror.

Linen Cupboard. To be fitted with five 12x1 shelves.

Safe. Build safe on end of sink top, or in cupboards and fit with panel door and shelf.

Tubs. Build 3x2 stand for set of 4' concrete tubs in wash-house.

Skirting. Fit 4x1 bevelled skirting round all walls which are not matchline

Architraves. To be flush with 1½" half round bead and 1½x1½x1½ angle blocks.

Doors. Front door to be 6'6"x 2'8" x 1¾" Ht. Rimu or Redwood with glass panels and full bottom panel. Hang on rebated jambs with 2 - 4" cast butts. Fix with Yale lock and handles. Back door to be 6'6" x 2'8" x 1¾" framed ledge and sheeted with 6x1 T.G. & V. Ht. Rimu sheeting hung in rebated jambs as before and fitted with rim lock. Internal doors to be 6'6" x 2'8" x 1½" flush type. Each door to be hung on 2" butts in rebated jambs of 6x1½ dressed ordinary rimu and fitted with bakelite lock sets. Wash-house and W.C. doors to be common ledge hung with 4" butt hinges and fitted with two 3" steel hinges and approved handles.

Document Set ID: 414740
Version: 1, Version Date: 29/10/2004

41/76

Windows. All sashes throughout unless otherwise specified to be made as shown on plan. Centre window 26 x 36 glass. Sash style to be 2x2, rails 3x2 and 4x2. All made of oregon or totara - fanlight in centre to open.

Frames. All Ht. Rimu. Jambs solid rebated 6x1½ transom 4x3, mullions 4x3, sills 9x2½ double sunk Ht. Metal. Outside facing 5½x⅞". Each sash and fanlight to be hung with two 2½" butts and fitted with A.C. on brass casement fanlight openers.

Glazing. Sashes to be glazed with 18 oz clear glass. Fanlight arctic glass, big square to be glazed with 24 oz. glass.

Casement Stays. Sashes to be fitted with 12" A.C. on brass casement fasteners and 12" fanlight openers in A.C. on brass.

PLUMBERS SPECIFICATION.

Roof. Concrete tiles or aluminium alloy.
Flush the chimney with proper step and apron flashing. Lead to be used for wash-house chimney. Secure flashing with lead plugs and point with cement. Flash over all windows and door frames and everywhere necessary to make the building watertight.

Spouting. 4x3 wood made of Ht. Rimu and inside coated with pitch, fibrolite or aluminium.

Downpipe. Fibrolite or aluminium.

Ridging. Aluminium with roll.

Water. Lay on the cold supply with ½" iron piping to bath, basin, sink, tubs and copper.

Bath. Supply a 5'6" galvanised iron bath squared to suit corner. Fit with hot and cold ¾" taps marked Hot and Cold. Fit with 1½" lead trap and 1½" galvanised waste.

Sink. Provide and fit one 20 x 14 enamel sink and connect as above.

Basin. Provide and fit one 22 inch porcelain basin.

Tubs. Fit up tubs with all necessary lead trap and 1" galv. iron waste-pipe. Lay water over tubs and copper and fit with brass taps. Allow for one hot or one cold tap over copper.

W.C. Instal low down cistern complete with porcelain pan and fittings complete.

Hot Water. Provide and fit one 25 gallon heater of approved make. Fit with 600 w. element pipe to be carried through roof with 6" piping. Lay on hot water with ¾" piping to basin, sink and one tap over tubs.

ELECTRICIAN.

Lay on electric light in wood casing where shown on plan. Provide all necessary lamps, switches, shades, ceiling roses and metre board. Provide two heating points where required. Allow for one waterheating and range point. Supply electric range.

PAINTERS.

The whole of the exterior woodwork to be primed with half red and white lead in oil. The weatherboards to be primed before fixing. The whole to be well stopped up before applying second coat. The whole building to receive three coats and finished to shades approved by proprietors.

Fibrolite. To have two coats limewash and finished to approved shades.

Document Set ID: 414740
Version: 1, Version Date: 29/10/2004

41/26

Bathroom. To receive two coats solid stopped and one coat enamel. The work to be well rubbed down between each coat and finished with a smooth and even gloss.

Kitchen. To be painted and finished in enamel of approved shades.

Inside Finish. All inside work to be stained to approval, stopped, knotted and finished with one coat flat varnish. Wash-house and W.C. to receive two coats.

Papering. Paper the fibrous plaster walls throughout. Walls to be sized before hanging paper. Paper value - 4/- per roll to be selected by owner and to be hung from ceiling to skirting.

Document Set ID: 414740
Version: 1, Version Date: 29/10/2004

NEW PLYMOUTH CITY COUNCIL. CITY ENGINEER'S DEPARTMENT.

BUILDING PLAN REPORT

No. 1559

41/26 13/9/1941

To Building Superintendent.

I hereby certify that T. ALLEN

of 26 BAYLY RD applied on 13/9/1941 for permission to erect a

DWELLING for Self

of on Lot No. 10 Deposited Plan No. 2875

Sec. No. Timber If Nec. Fire Dist 26 BAYLY Road ~~(Street)~~

I have examined the plan (or plans) and specifications for type of building, use, siting, coverage, sewer and water connections, vehicle crossings, etc., and all other requirements under the Town Planning Code and Parts 1 to 6 of the N.P.C.C. Standard Code of Building By-laws. The fees payable are as under.

TOTAL VALUE OF WORK £ 1200

Note. Permit for Foundations paid separately.

NAME OF FEE	£	s.	d.
Building Permit	8	-	-
Sanitary Plumbing and Drainage ...	2	-	-
Sewer Connection Exist			
Water Connection Exist			
Water (Building Contractor) Paid			
Vehicle Crossing			
Deposit—Repairs to Path and Kerb			
Hoarding, Barricade			
.....			
.....			
TOTAL	10	-	-

Builder T. ALLEN

Address

Plumber T. CAMPBELL

Address

Drainlayer

Address

Building Controller's Approval —

Building Plan No. 1261 S165

Position of Sewer Connection —

Position of Water Connection —

R. F. MAINLAND,
City Engineer.

Per

McL. & S. Ltd.—4314

Document Set ID: 414740
Version: 1, Version Date: 29/10/2004

NEW PLYMOUTH BOROUGH COUNCIL. BOROUGH ENGINEER'S DEPARTMENT.

BUILDING PLAN REPORT

41/26 № 1286

20/3/1941

To Building Superintendent.

I hereby certify that MR. T. ALLAN

of 26 BAYLY RD. applied on 20/3/1941 for permission to erect a FOUNDATIONS FOR DWELLING for SELF

of on Lot No. 10 Deposited Plan No. 2873

Sec. No. Moturoa IF Blk. Grey Rd 26 BAYLY RD. Road (Street)

I have examined the plan (or plans) and specifications for type of building, use, siting, coverage, sewer and water connections, vehicle crossings, etc., and all other requirements under the Town Planning Code and Parts 1 to 6 of the N.P.B.C. Standard Code of Building By-laws. The fees payable are as under.

TOTAL VALUE OF WORK £ 56

NAME OF FEE	£	s.	d.
Building Permit		10	-
Sanitary Plumbing and Drainage ...			
Sewer Connection			
Water Connection			
Water (Building Contractor) ...			
Vehicle Crossing		3	6
Deposit—Repairs to Path and Kerb			
Hoarding, Barricade			
.....			
.....			
TOTAL		13	6

Builder SELF

Address

Plumber

Address

Drainlayer

Address

Building Controller's Approval 210

Building Plan No. 6160 [illegible]

Position of Sewer Connection

Position of Water Connection

R. F. MAINLAND,
Borough Engineer.

Per

McL. & S. Ltd.—2200

Document Set ID: 414740
Version: 1, Version Date: 29/10/2004

(Copy for Local Body records)

No. 210
6064

B.C.—Form 17A]

Office of the District Building Controller,
P.O. Box 629,
Palmerston North.
18th, March, 1949.

Mr. T. Allan,
26 Bayly Road,
NEW PLYMOUTH.

Dear Sir,—

CONSENT OF BUILDING CONTROLLER 41/26

(Before commencing work, a formal Building Permit is to be obtained from the Local Authority)

APPLICANT: Mr. T. Allan.
BUILDER: Owner.
PROPOSAL: Erect foundation walls for future dwelling, 512sq. ft.
ADDRESS OF BUILDING SITE: As above.
ESTIMATED COST:

The above proposal is approved subject to the work being carried out in accordance with Local Body By-laws, Building Control Regulations, Building Control Notices, and any special conditions shown hereunder

No concrete floor is to be laid.

The Chief Inspector,
New Plymouth City Council,
NEW PLYMOUTH.

Yours faithfully,

District Building Controller.

1,000 [illegible]/10/48—[illegible]

Copy for your information.

Document Set ID: 414740
Version: 1, Version Date: 29/10/2004

41/26

APPROVED
SUBJECT TO CONDITIONS AS SET
OUT IN CONSENT No 210
for DISTRICT BUILDING CONTROLLER
Date

DISTRICT COUNCIL CHAMBERS
18 MAR 1949
RECEIVED
PATERSON NORTH

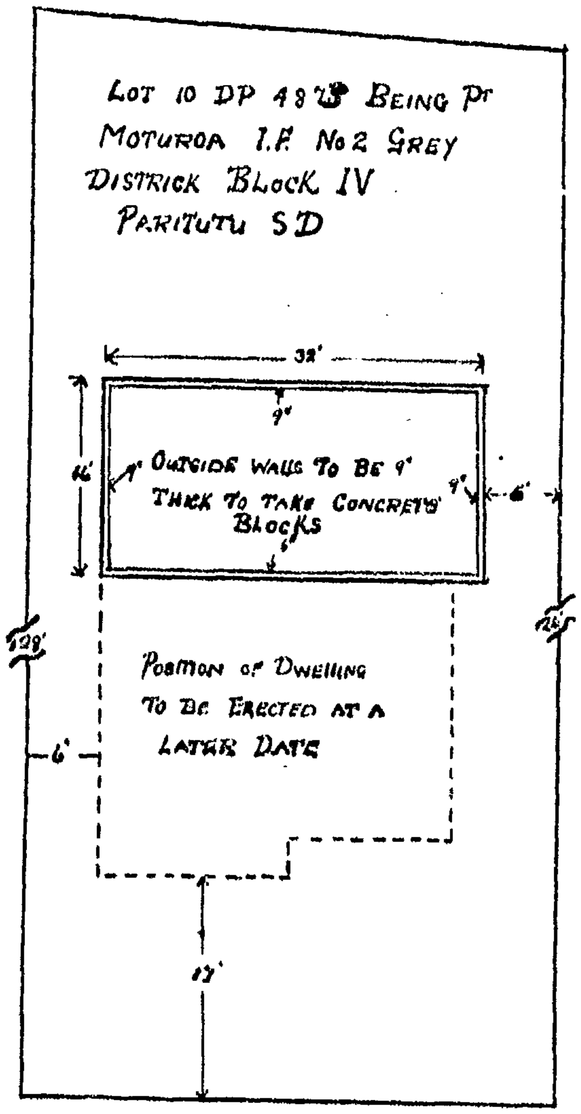

Block Plan

Proposed Residence for
Mr. T. Allan.
26 Bayly Rd.
New Plymouth

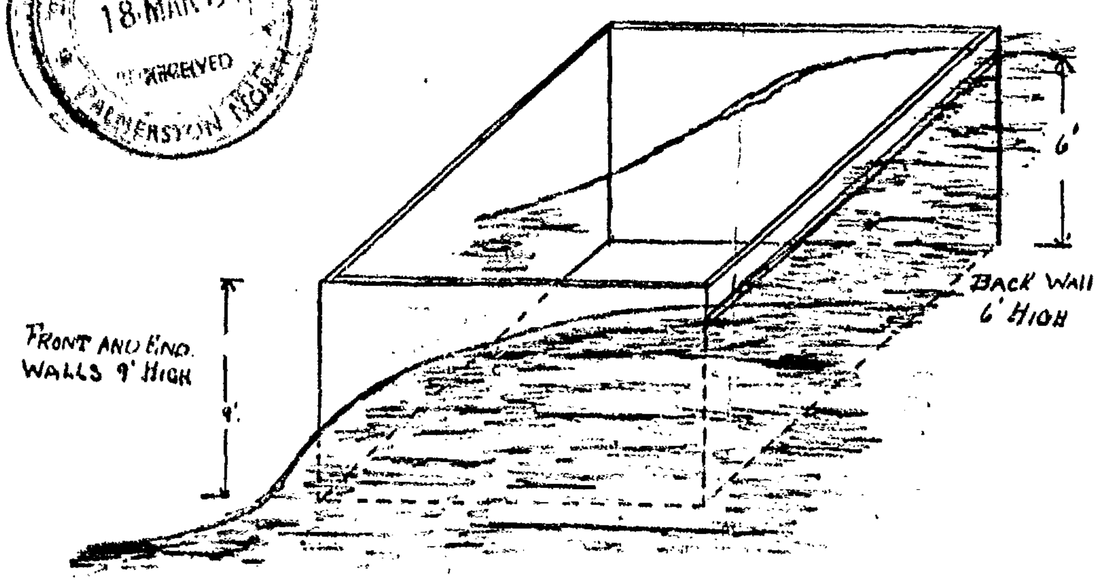

End View

Approved in accordance with N.P.C.C
Standard Code of Building By Laws
Parts I. to VI.
K. F. Mainland
City Engineer
Date 30/3/49

INSPECTORS OFFICE
-7. JAN. 1949

JY.SK. MINISTRY OF ~~SUPPLY~~ WORKS
OFFICE OF THE BUILDING CONTROLLER
P.O.Box 320,
Palmerston North.
30th October, 1945.

IN YOUR REPLY PLEASE REFER TO .....

41/26

Mr. T. Allen,
28 Bayly Road,
NEW PLYMOUTH

Dear Sir,

Proposed temporary dwelling. APPROVAL NO.2630

I have received from the Chief Inspector, New Plymouth Borough Council, your application for permission to erect a temporary dwelling at the above address. This application has my approval subject to the observance of the Building Control Regulations 1939.

It will be understood that no new glavanised iron is permitted to be used for the roof, downpipes, spouting or flashings, other than for door and window flashings.

Please obtain a building permit from the Borough Council before commencing work on the above proposal, the estimated cost of which is noted at £200.

Yours faithfully, P.T.O.

DISTRICT BUILDING CONTROLLER

Document Set ID: 414740
Version: 1, Version Date: 29/10/2004

41/26

NEW PLYMOUTH BOROUGH COUNCIL.

BOROUGH ENGINEER'S DEPARTMENT.

BUILDING PLAN REPORT.

2nd Nov 1945.

TO BUILDING SUPERINTENDENT.

I hereby certify that T. Allen

of 28 Bayly Rd applied on 2nd Nov 1945 for

permission to erect a Temporary dwelling

for himself of

Lot No. 10 Deposited Plan No. 1873 Sec.No.

26 Bayly Road (~~Street~~)

I have examined the plan (or plans) and Specifications for type of building, use, siting, coverage, sewer and water connections, vehicular crossings etc. and all other requirements under the Town Planning Code and Parts 1 to 6 of the N.P.B.C. Standard Code of Building By-laws and authorise the issue of permit as under:-

TOTAL VALUE OF WORK. £ 200

NAME OF FEE	£.	s.	d.
BUILDING PERMIT	1	–	–
SANITARY PLUMBING & DRAINAGE	1	–	–
SEWER CONNECTION	5	10	–
WATER CONNECTION	3	–	–
WATER (BUILDING CONTRACTOR)			
VEHICLE CROSSING			
DEPOSIT-REPAIRS TO PATH AND KERB.			
HOARDING, BARRICADE.			
W.C.		5	0
Sewer Rate		2	2
TOTAL.	10	18	2

BUILDER T Allen
ADDRESS 28 Bayly Rd

PLUMBER W Rock
ADDRESS

DRAINLAYER W. Rock
ADDRESS

R.F. MAINLAND.
BOROUGH ENGINEER.
Per H.K.T.

Position of Sewer Connection 3' from South side 4' deep

Position of Water Connection [illegible]

Building Controller's Approval 1630 Building Plan No.

37 Images

BUILDING CONSENT

56238P

PROPERTY ID 017552

56238P

Document Set ID: 614735
Version: 1, Version Date: 09/08/2004

EXTRA INFORMATION/AMENDMENTS

Charge: $

Job: Forsyth

Address: 26 Bayly Road New Plymouth

Consent No: 56238

The changes covered by this amendment are:

- Building & Planning requests

Formal Declaration – (Please read carefully prior to signing)

*This **AMENDMENT** to the abovementioned Building Consent is made by me as **owner** of the property:*

Signature: Date:

OR *I am the applicant **authorised by the owner** to make this **AMENDMENT:***

Signature: Date: 18-11-03

Office use only

Approved	Refused

Records	
Building	
Public Health	
District Planning	
	24/11/03

18 NOV 2003

Resource Consent approval is required

Co-homes have 1 bed within 1.5 metres of a side body

Rule Rec 15

LEGL: 049262
BC: 56238

10 November 2003

Clelands Construction Ltd
Attention: Andy Cleland
P O Box 3240
NEW PLYMOUTH 4615

Dear Andy

DWELLING ALTERATIONS & DECK – 26 BAYLY ROAD, NEW PLYMOUTH

Thank you for your building consent application. Unfortunately we are unable to approve your project at this time and the following information is to be provided to Council so we can complete the plan check. Please submit your amendments at the customer support counter or if appropriate fax to 06 759 6118. If you have any queries regarding these matters please contact the undersigned.

BUILDING:

1. The 150 x 100mm lintel over the dining room window is outside the scope of NZS 3604 and either is to be upgraded or calculations are to be supplied to show that it will support the loads.
2. The plans are to be amended to show the back vent as a terminal vent.
3. Show the position of any soakholes on the plans.
4. Provide the profile of the roof cladding and show that it is suitable for a 5 degree pitch.
5. The 100 x 100mm piles/posts supporting the deck are to be upgraded to 125 x 125 minimum to comply with NZS 3604.
6. The position of any smoke alarms are to be shown on the plans.
7. Details of the post/beam connections to the front entry roof structure are to be provided.
8. Calculation are to be supplied showing that the 150 x100 mm cantilevered beam to the front entry will carry the loads and not deflect.
9. Amend the plans/specifications to show that the loads from the flitch beam are carried to the ground.

PLANNING:

There appears to be a discrepancy with the naming of the elevation plans. Please correct the drawings by showing the correct southern elevation etc.
The proposed development as submitted will require Resource Consent approval under the following rules to the Proposed District Plan.
Rule Res 6 – Daylighting to side boundaries.
At 1.3 off the southern boundary the height shall not exceed 3.91 metres.

Calculated as follows: distance off the boundary 1.3metres x .70 (35 degrees) + 3metres = max height 3.91 metres.

Rule Res 15: The minimum setback from a side boundary is 1.5 metres or less than 1.5 metres where all buildings erected within 1.5 metres of the side boundary does not exceed 12 metres or 50% of the boundary whichever is the lesser.

The submitted plan show more than 12metres within 1.5 metres of the side boundary.

Confirm that the original ground line is that shown on the submitted plans.
The original ground line under the Proposed District Plan is the ground at the time of the deposit of the plan for subdivision.

For further advice with the above Planning issues, please contact Sue Ingram on 759 6060 ext 8713.

To avoid any further delays we would appreciate the requested information being provided within 20 working days from the date of this letter.

Should you envisage difficulty with this could you please contact the Council's Customer Support Section to discuss the matter.

Yours faithfully

Don Baker
BUILDING CONSENTS OFFICER

DM071213

NEW PLYMOUTH DISTRICT COUNCIL
newplymouthnz.com

Liardet Street, Private Bag 2025, New Plymouth, New Zealand
Phone: 06 759 6060, Fax: 06 759 6072, E-mail ingrams@npdc.govt.nz

File Ref: 049262 Legl

7 November 2003

Clelands Construction
Attention: Andy

Fax No: 75 79752
No. of Pages: 1

BUILDING CONSENT APPLICATION 56238 – 26 BAYLY ROAD, NEW PLYMOUTH

Good morning Andy
There appears to be a discrepancy with the naming of the elevation plans. Please correct the drawings by showing the correct southern elevation etc.
The proposed development as submitted will require Resource Consent approval under the following rules to the Proposed District Plan.
Rule Res 6 – Daylighting to side boundaries.
At 1.3 off the southern boundary the height shall not exceed 3.91 mts.
Calculated as follows: distance off the boundary 1.3mts x .70 (35 degrees) + 3mts = max height 3.91 mts.

Rule Res 15: The minimum setback from a side boundary is 1.5 metres or less than 1.5 metres where all buildings erected within 1.5 metres of the side boundary does not exceed 12 metres or 50% of the boundary whichever is the lesser.

The submitted plan show more than 12mts within 1.5 metres of the side boundary.

Confirm that the original ground line is that shown on the submitted plans.
The original ground line under the Proposed District Plan is the ground at the time of the deposit of the plan for subdivision.

Should you wish to discuss the matter further please do not hesitate to contact the writing on extension 8713 (7596060).

Sue Ingram
Planning Officer

070912

The information contained in this message (and any accompanying documents) is CONFIDENTIAL and may also be LEGALLY PRIVILEGED, intended only for the recipient(s) named above. If the reader of this message is not the intended recipient, you are notified that any use, copying, disclosure, retention or distribution by any means of the information is strictly prohibited. If you have received this message in error, please notify the writer immediately and destroy the original(s).

CLELANDS
CONSTRUCTION LTD

To: Sue Ingram

Company: NPDC

Facsimile: 75-96118

Subject: 26 Bayly Road

From: Andy

Return Fax No:

No. of Pages: 2 (Including this page)

Message:

Hello Sue

Hope this is what you requir

Regards Andy

61 Katere Road P.O.Box 3240 New Plymouth Ph. 64 6 758 0869 Fax 64 6 757 9752
Email head.office@clelands.co.nz www.clelands.co.nz

innovative building solutions

25-NOV-2003 10:23 FROM:CLELANDS CONSTRUCTIO 64 6 7579752 TO:17596118 P:2

Document Set ID: 614735
Version: 1, Version Date: 09/08/2004

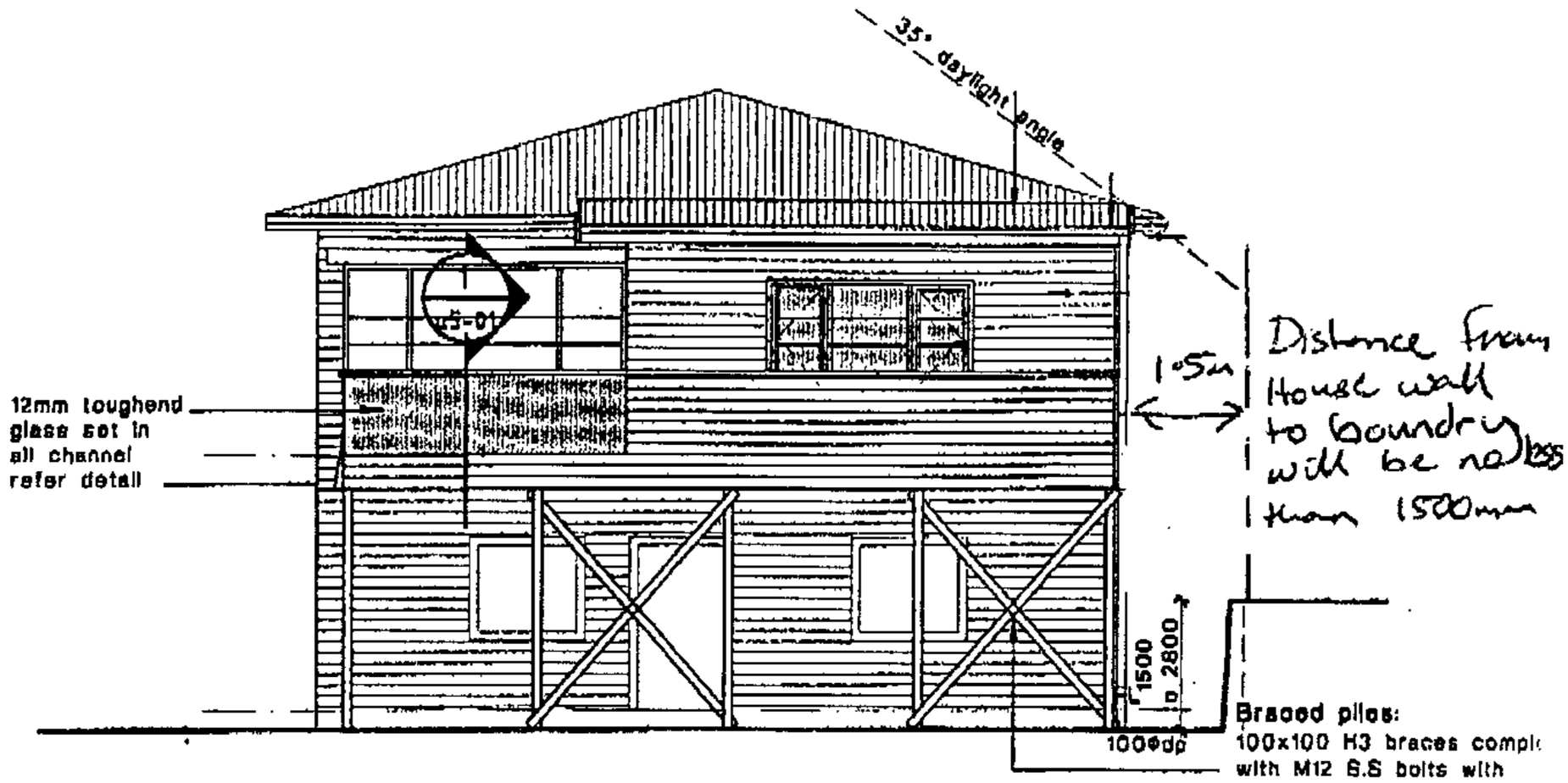

east elevation
SCALE 1:100

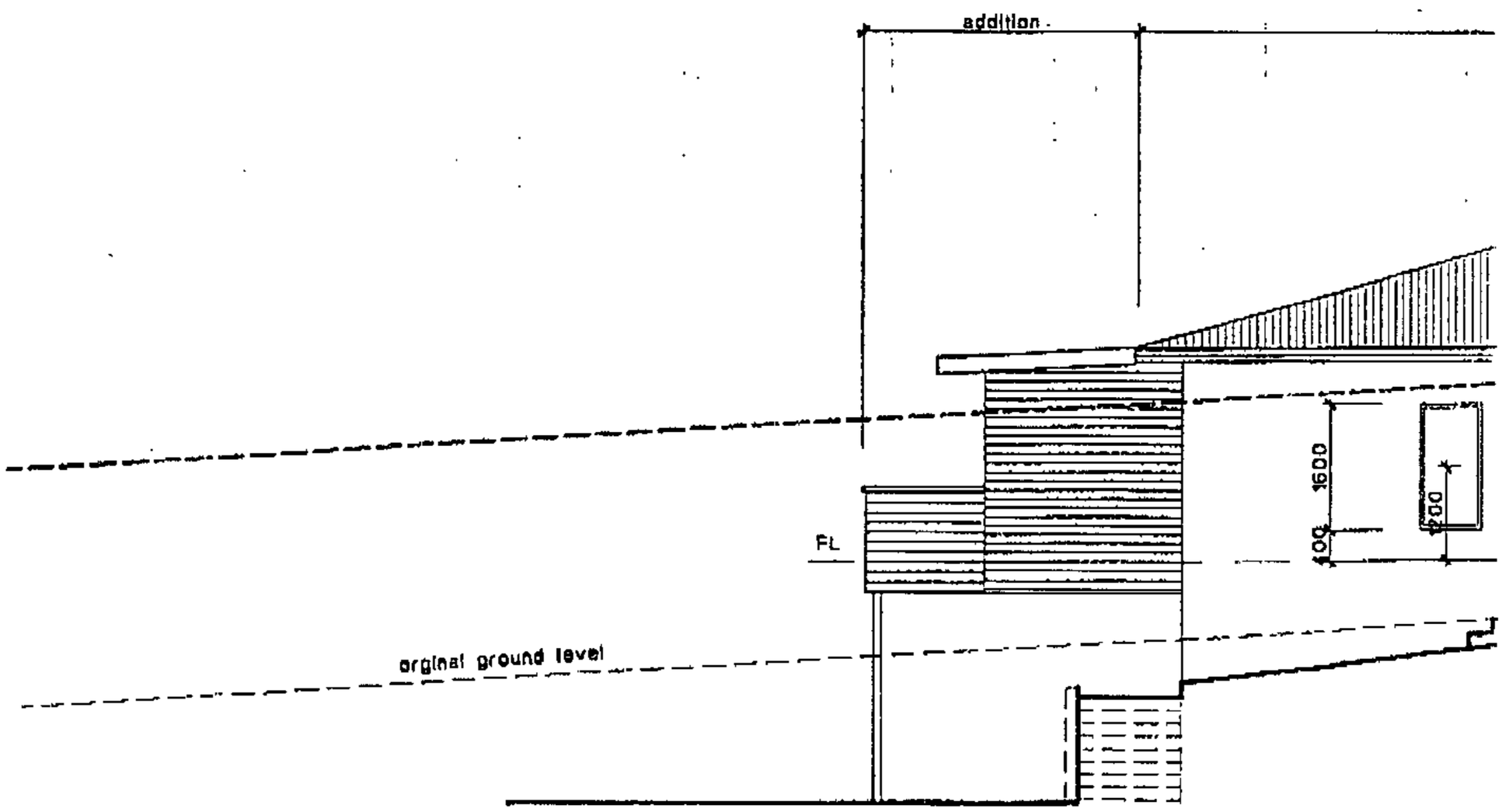

south elevation
SCALE 1:100

Document Set ID: 614735
Version: 1, Version Date: 09/08/2004

(5)

Please Photocopy

Gib Board® Wall Bracing Systems Construction Guide

(complies with NZS 3604 : 1990)

Specifications			
Type	**Description**	**Additional Requirements**	**Nailing & Stopping**
Gib 1	9.5mm Gib Board® on one face. Min. length 1800mm	Diagonal brace	Gib 1, 2 and 3 30 x 2.5 Gib Clouts® at 150mm cos. around the perimeter of the bracing element and at 300mm ccs. to intermediate framing. Tape and stop all joints within the bracing element.
Gib 2	9.5mm Gib Boards® on both sides. Min. length 1800mm	Diagonal brace	
Gib 3	9.5mm Gib Boards® on both sides. Min. length 1200mm	No additional requirement	
BR 1	Gib Braceline® on one face. Min. length 1800mm	Diagonal brace	BR 1, 2, 3, 4, 5, 6, 7 and 8 30 x 2.5 Gib Clouts® fitted with Gib Braceline® washers at 150mm ccs. around the perimeter of the bracing element. Standard nailing to intermediate framing. Tape and stop all joints within the bracing element.
BR 2	Gib Braceline® vertical on one face. Min. length 1800mm	No additional requirement	
BR 3	Gib Braceline® horizontal on one face. Min. length 1800mm	No additional requirement.	
BR 4	Gib Braceline® on one face. Length 900 to 1200mm	6 kN end-stud fixings	
BR 5	Gib Braceline® on one face. Length 1200 to 2400mm	6 kN end-stud fixings	
BR 6	Gib Braceline® and Gib Board® on opp. sides. Length 1200 to 2400mm	12 kN end-stud fixings	
BR 7	Gib Braceline® on one face 7.5mm ply on other. Length 900 to 2400mm	6 kN end-stud fixings	
BR 8	Gib Braceline® on one face 4.75mm hardboard on other. Length 900 to 2400mm	6 kN end-stud fixings	

Guidelines for Intersecting Walls

Types BR1 to BR8 may have standard 9.5mm Gib Board® intersecting walls with a min. length of 200mm. Gib Braceline® nails and washers are required around the perimeter of the bracing element (*). Intermediate vertical joints may be nailed with standard Gib Clouts® at 300mm ccs. and should be tape reinforced and stopped.

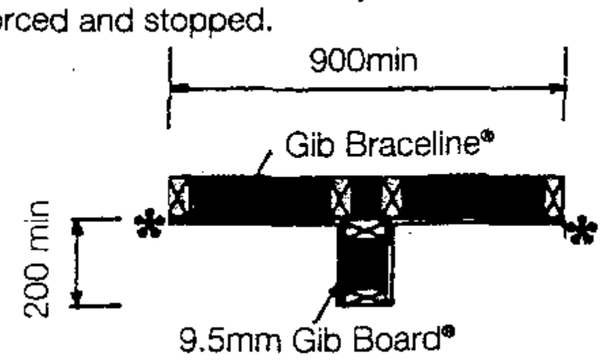

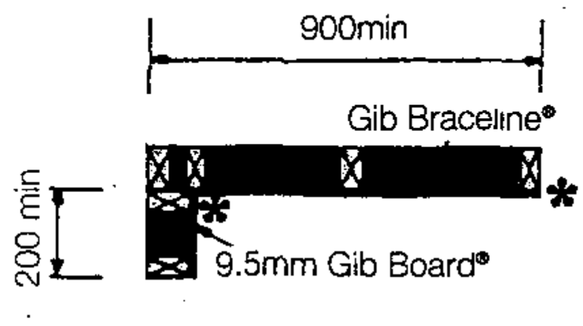

MBIDC Approved
26 NOV 2003

GIB BOARD®

Document Set ID: 614735
Version: 1, Version Date: 09/08/2004

EXTRA INFORMATION/AMENDMENTS

30 OCT 2003 11-00am

Consent No: 56238

Charge: $

Job: Forsyth

Address: 26 Bayly Road New Plymouth

The changes covered by this amendment are:

- Bracing & flitch plate details

Formal Declaration – (Please read carefully prior to signing)

*This **AMENDMENT** to the abovementioned Building Consent is made by me as **owner** of the property:*

Signature: Date:

OR *I am the applicant **authorised by the owner** to make this **AMENDMENT**:*

Signature: Date: 30-10-03

Office use only

Approved	Refused

Records	
Building	
db.	
Public Health	
District Planning	

(5)

Please Photocopy

Gib Board® Wall Bracing Systems Construction Guide

(complies with NZS 3604 : 1990)

Specifications			
Type	**Description**	**Additional Requirements**	**Nailing & Stopping**
Gib 1	9.5mm Gib Board® on one face. Min. length 1800mm	Diagonal brace	Gib 1, 2 and 3 30 x 2.5 Gib Clouts® at 150mm cos. around the perimeter of the bracing element and at 300mm ccs. to intermediate framing. Tape and stop all joints within the bracing element.
Gib 2	9.5mm Gib Boards® on both sides. Min. length 1800mm	Diagonal brace	
Gib 3	9.5mm Gib Boards® on both sides. Min. length 1200mm	No additional requirement	
BR 1	Gib Braceline® on one face. Min. length 1800mm	Diagonal brace	BR 1, 2, 3, 4, 5, 6, 7 and 8 30 x 2.5 Gib Clouts® fitted with Gib Braceline® washers at 150mm ccs. around the perimeter of the bracing element. Standard nailing to intermediate framing. Tape and stop all joints within the bracing element.
BR 2	Gib Braceline® vertical on one face. Min. length 1800mm	No additional requirement	
BR 3	Gib Braceline® horizontal on one face. Min. length 1800mm	No additional requirement.	
BR 4	Gib Braceline® on one face. Length 900 to 1200mm	6 kN end-stud fixings	
BR 5	Gib Braceline® on one face. Length 1200 to 2400mm	6 kN end-stud fixings	
BR 6	Gib Braceline® and Gib Board® on opp. sides. Length 1200 to 2400mm	12 kN end-stud fixings	
BR 7	Gib Braceline® on one face 7.5mm ply on other. Length 900 to 2400mm	6 kN end-stud fixings	
BR 8	Gib Braceline® on one face 4.75mm hardboard on other. Length 900 to 2400mm	6 kN end-stud fixings	

Guidelines for Intersecting Walls

Types BR1 to BR8 may have standard 9.5mm Gib Board® intersecting walls with a min. length of 200mm. Gib Braceline® nails and washers are required around the perimeter of the bracing element (*). Intermediate vertical joints may be nailed with standard Gib Clouts® at 300mm ccs. and should be tape reinforced and stopped.

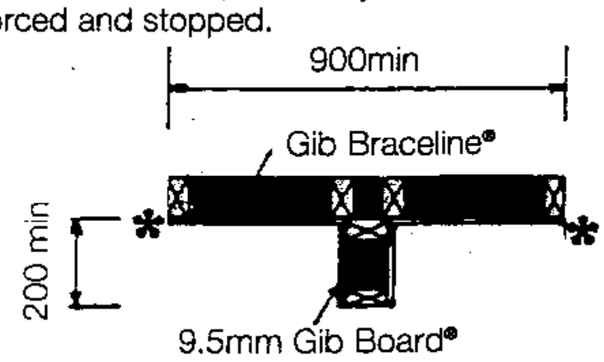

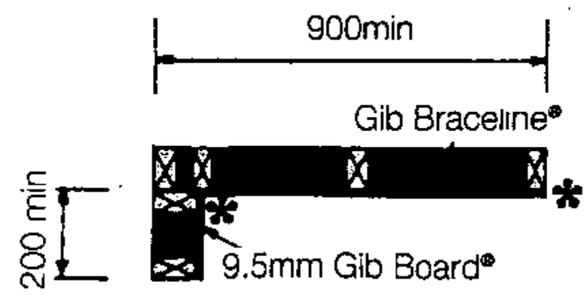

GIB BOARD®

Document Set ID: 614735
Version: 1, Version Date: 09/08/2004

Specification

Description

The GANG-NAIL FLITCH BEAM is a composite beam formed with a steel plate sandwiched between timber. The beam is manufactured with shot fired nails, fired through the timber into the steel.

The use of the GANG-NAIL FLITCH BEAM system eliminates the variations in timber performance and allows large openings to be spanned, such as garage doors, while keeping the lintel depth to an acceptable minimum.

Each beam is custom-made to measure and can be cambered to suit the application.

Sizes and Codes

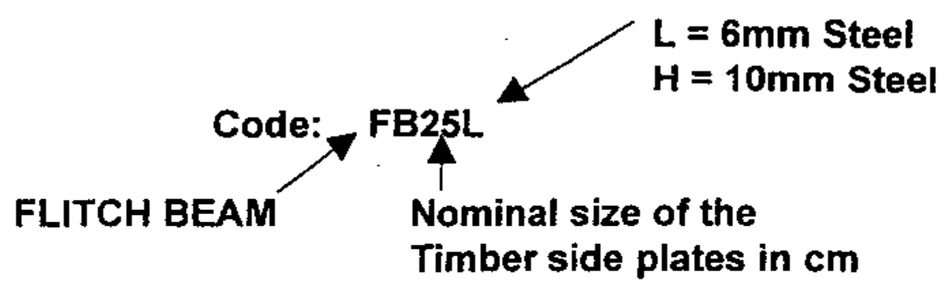

See page 5 for beam sizes

Storage and Handling

Consideration for the storage and handling of GANG-NAIL FLITCH BEAMS is the same as for trusses in general. However, particular care is required to ensure the beams stay dry by avoiding exposure to wet weather. The beams are marked to identify the right way up and special load bearing points if any.

Stability

Top Edge Restraint
All GANG-NAIL FLITCH BEAMS are to be restrained along their top edge at 900mm centres maximum for heavy roof and 1200mm centres maximum for light roof.
Floor beams are restrained along their top edge at 600mm centres maximum.

Timber Specification

Normal:	F5 machine stress graded Radiata Pine or MGP10 or No.1 framing Radiata Pine or No.1 framing Douglas Fir or equivalent grade of other species (refer MiTek New Zealand).
Architectural:	Select visually acceptable Grade as above.
Treatment:	Refer to NZS3602.
Moisture Content:	**All GANG-NAIL FLITCH BEAMS are made dry**, 18% or less at time of fabrication.

Durability

GANG-NAIL FLITCH BEAMS used in internal situations ("closed" as defined by NZS3604) require no further protection to satisfy 50 year durability requirements.
GANG-NAIL FLITCH BEAMS are not suitable for sheltered or exposed environments.

Document Set ID: 614735
Version: 1, Version Date: 09/08/2004

Steel Specification

Steel flitch plates to be sourced from MiTek New Zealand Limited and ordered as:
FB15L, FB25L, FB20H, FB25H, FB30H.

Nail Specification

The nail shall have full penetration through the steel flitch and must have at least 75% bearing on the timber side plates, driven from both timber faces located as per GANG-NAIL construction details.

The nail is to be a minimum 3.7mm power driven fastener, 60mm to 65mm length range and applied by a licensed powered fastener operator. Washers may be used to get even penetration.

Design Data

The tables herein have been designed according to the following loads;

Roof

Dead Load	Lightweight roof Heavyweight roof Ceiling	0.25 kPa 0.65 kPa 0.20 kPa
Live load	0.25 kPa uniform	1.0kN point load

Note:
1) 750mm overhang has been included in the derivation of the tables.
2) Spans are horizontal measurements.
3) For heavy roofs over 30° pitch, multiply the roof span by 1.17 before using the tables:

Nominal Roof Span = 1.17 x Actual Roof Span

Floor

Dead Load	Particle board floor (including ceiling)	0.40 kPa
Live load	Domestic floor	1.5 kPa, 1.8kN
Permanent Load	G+0.4Q	1.0 kPa

Snow

0.5kPa snow load has been allowed for in the charts
For higher snow loads up to 1.0 kPa, multiply the actual roof span by 1.37 before using the tables:

Nominal Roof Span = 1.37 x Actual Roof Span

Wind

The tables are applicable for wind zones up to HIGH WIND, as defined by NZS3604.
For VERY HIGH WIND load conditions select the lintel using the HEAVY roof weight.

Deflection Criteria

Max long term deflection	Span / 450
Max live load deflection	Span / 400

Camber

The maximum recommended camber is span / 600 at midspan. No camber is required for cantilever beams. Some beams may be supplied with no camber if on site packing is to be used to provide an acceptable finish.
A Creep Factor (K2) = 1.3 has been used in the derivation of the charts

Availability

MiTek New Zealand is pleased to advise on the application of this product. Please note that **FLITCH BEAMS** are manufactured throughout New Zealand *only by accredited* **GANG-NAIL** *fabricators*.

Document Set ID: 614735
Version: 1, Version Date: 09/08/2004

Beam Sizes

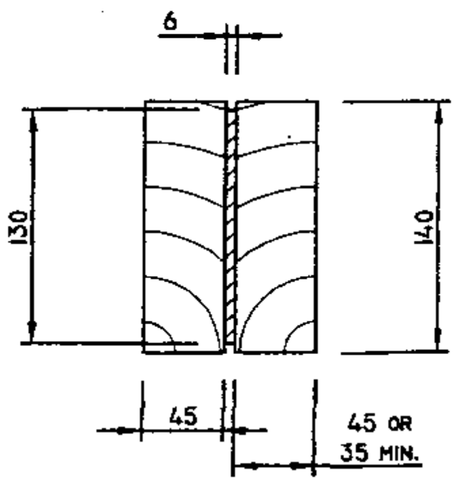

FB15L

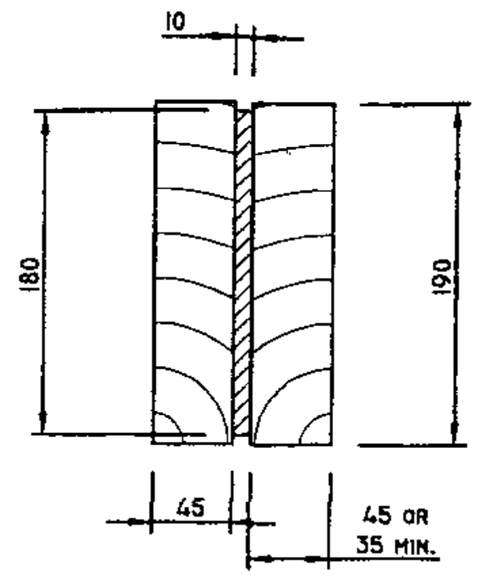

FB20H

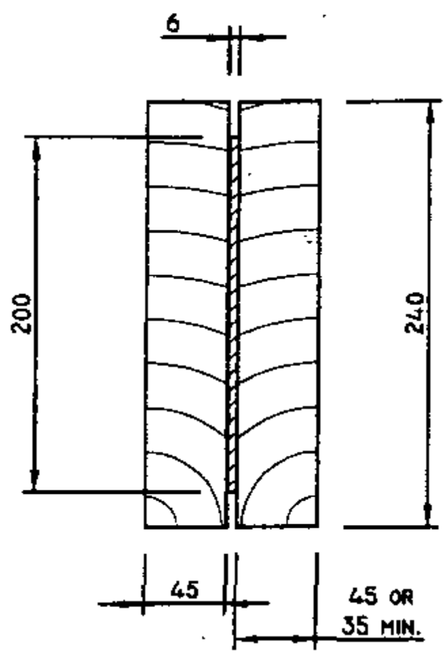

FB25L

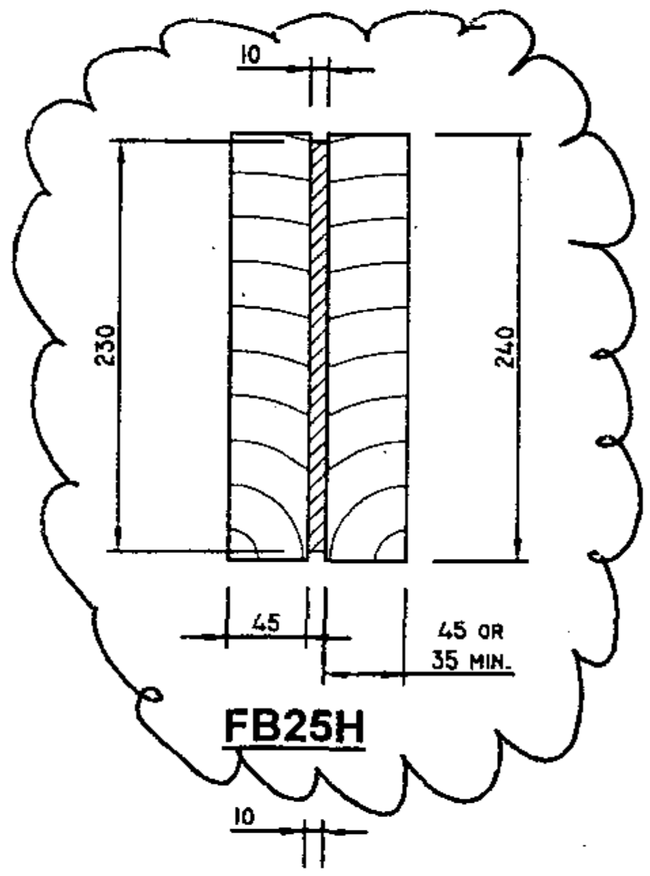

FB25H

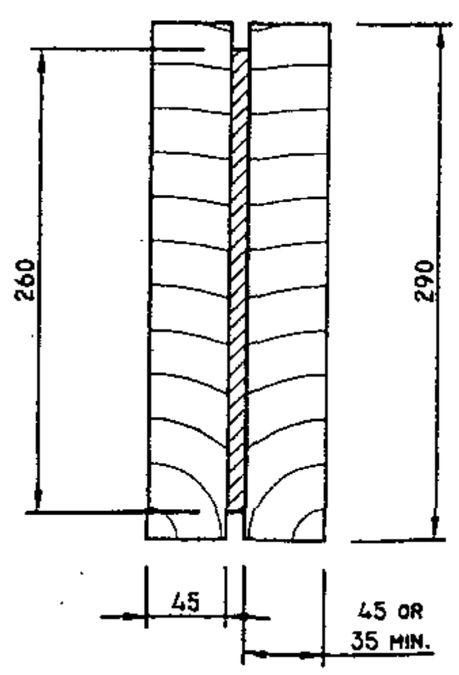

FB30H

PRODUCER STATEMENT

The **GANG-NAIL FLITCH BEAM** selection charts contained within this manual have been designed to comply with the relevant requirements of NZS4203 and NZS3603 of the approved documents issued by the Building Industry Authority and in accordance with sound and widely accepted engineering principles.

For and on behalf of MiTek New Zealand Ltd,

Stephen Anthony Coll
T.M. IPENZ, MNZIOB
Date: October, 2000

NOTE:
Timber side plates minimum overall thickness of 80mm (i.e. 35mm + 45mm).

Document Set ID: 614735
Version: 1, Version Date: 09/08/2004

Selection Charts

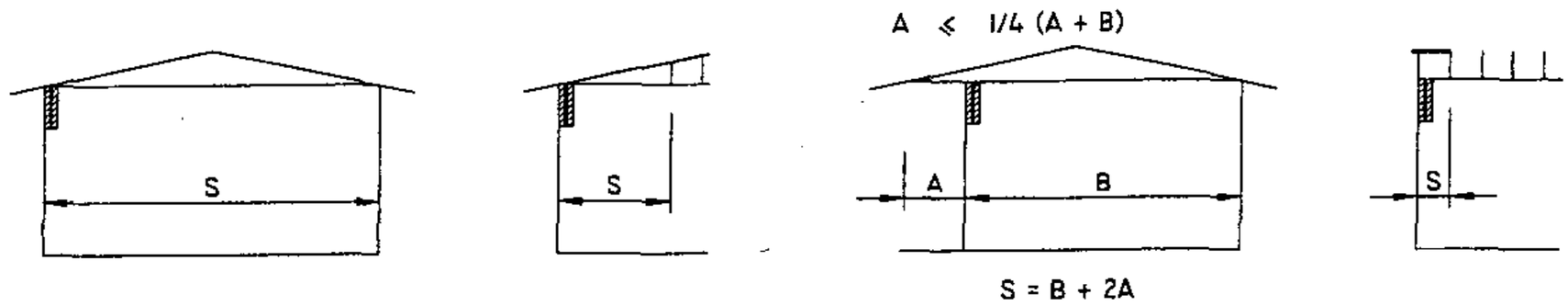

TABLE 1:
LINTELS SUPPORTING ROOF AND CEILING ONLY

	LINTEL SIZE	MAXIMUM LINTEL SPAN (m) — SUPPORTED ROOF SPAN 'S' (m)												
		3.0	4.0	5.0	6.0	7.0	8.0	9.0	10.0	11.0	12.0	13.0	14.0	15.0
LIGHT ROOF	FB15L	3.47	3.25	3.07	2.93	2.81	2.70	2.62	2.54	2.47	2.41	2.35	2.30	2.25
	FB20H	5.29	4.95	4.68	4.46	4.28	4.13	3.99	3.87	3.77	3.67	3.58	3.50	3.43
	FB25L	5.63	5.27	4.98	4.75	4.56	4.39	4.25	4.12	4.01	3.90	3.81	3.73	3.65
	FB25H	6.74	6.30	5.96	5.68	5.45	5.25	5.08	4.93	4.79	4.67	4.56	4.46	4.37
	FB30H	7.79	7.28	6.89	6.57	6.30	6.07	5.87	5.70	5.54	5.40	5.27	5.16	5.05
HEAVY ROOF	FB15L	2.81	2.63	2.48	2.37	2.27	2.19	2.12	2.05	2.00	1.95	1.90	1.86	1.82
	FB20H	4.28	4.00	3.79	3.61	3.46	3.34	3.23	3.13	3.05	2.97	2.90	2.84	2.78
	FB25L	4.56	4.26	4.03	3.84	3.69	3.55	3.43	3.33	3.24	3.16	3.08	3.02	2.95
	FB25H	5.45	5.10	4.82	4.60	4.41	4.25	4.11	3.99	3.88	3.78	3.69	3.61	3.53
	FB30H	6.30	5.89	5.57	5.31	5.10	4.91	4.75	4.61	4.48	4.37	4.27	4.17	4.09

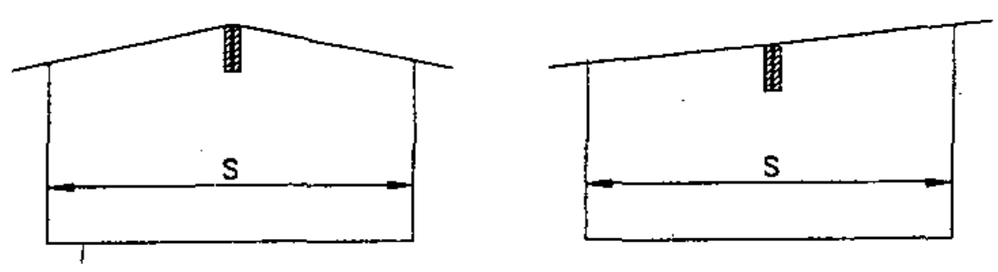

TABLE 2:
FLITCH BEAM RIDGE BEAM SUPPORTING ROOF AND SARKING OR CEILING (RAFTERS @ 1200mm CRS MAX)

	LINTEL SIZE	MAXIMUM LINTEL SPAN (m) — SUPPORTED ROOF SPAN 'S' (m)										
		5.0	6.0	7.0	8.0	9.0	10.0	11.0	12.0	13.0	14.0	15.0
LIGHT ROOF	FB15L	3.35	3.15	2.99	2.86	2.75	2.66	2.58	2.50	2.44	2.38	2.32
	FB20H	5.11	4.81	4.57	4.37	4.20	4.06	3.93	3.82	3.72	3.63	3.54
	FB25L	5.44	5.12	4.86	4.65	4.47	4.32	4.18	4.06	3.95	3.86	3.77
	FB25H	6.51	6.12	5.82	5.56	5.35	5.16	5.00	4.86	4.73	4.62	4.51
	FB30H	7.52	7.08	6.72	6.43	6.18	5.97	5.78	5.62	5.47	5.34	5.21
HEAVY ROOF	FB15L	2.71	2.55	2.42	2.32	2.23	2.15	2.08	2.02	1.97	1.92	1.88
	FB20H	4.13	3.89	3.70	3.53	3.40	3.28	3.18	3.09	3.01	2.93	2.87
	FB25L	4.40	4.14	3.93	3.76	3.62	3.49	3.38	3.29	3.20	3.12	3.05
	FB25H	5.26	4.95	4.70	4.50	4.33	4.18	4.05	3.93	3.83	3.73	3.65
	FB30H	6.08	5.72	5.44	5.20	5.00	4.83	4.68	4.54	4.42	4.32	4.22

Document Set ID: 614735
Version: 1, Version Date: 09/08/2004

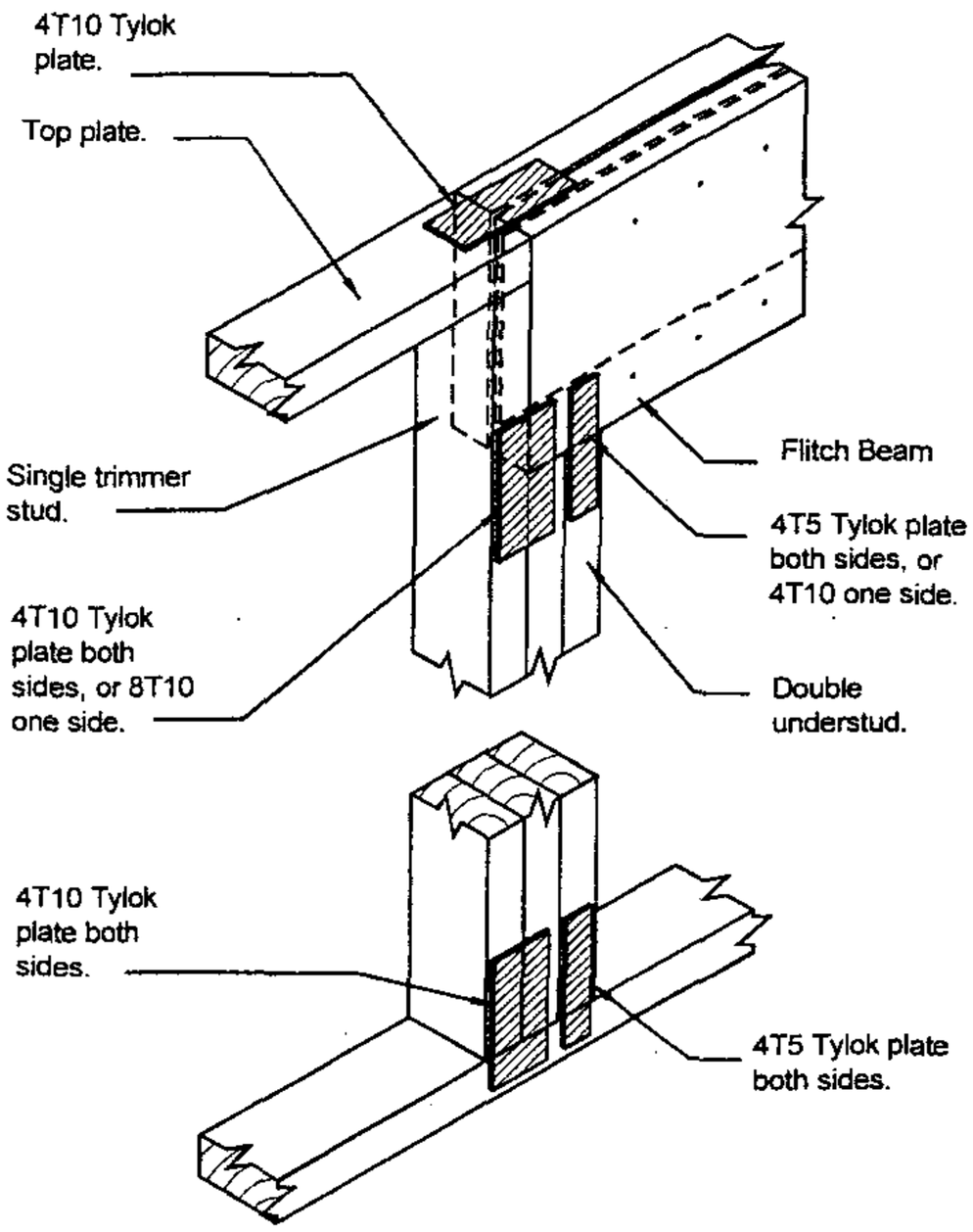

Simply Supported Beam

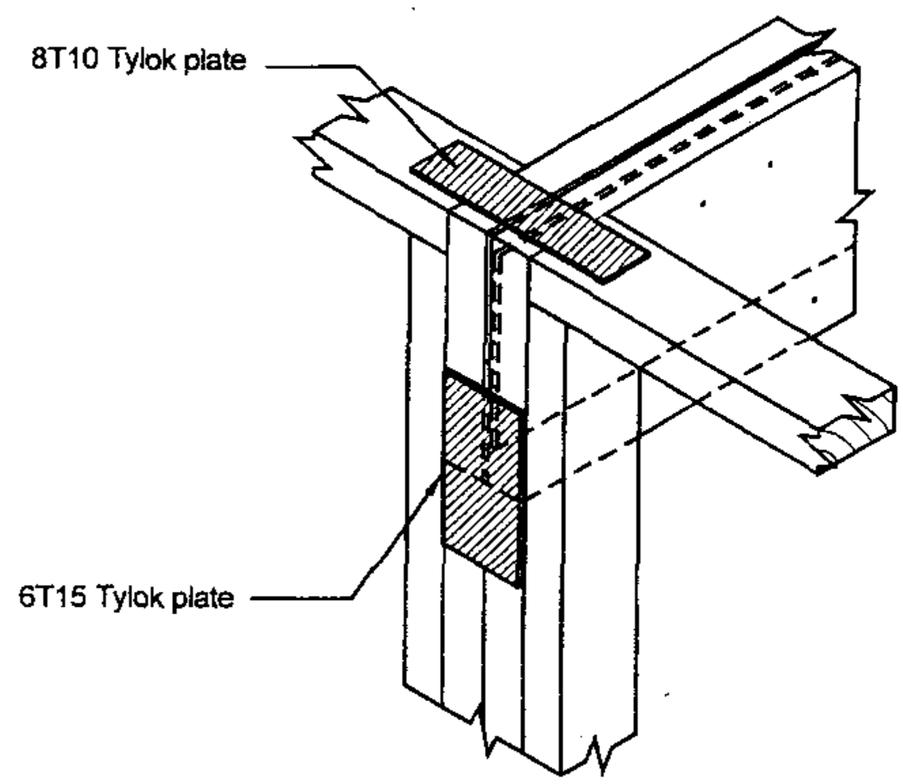

Beam Pocket

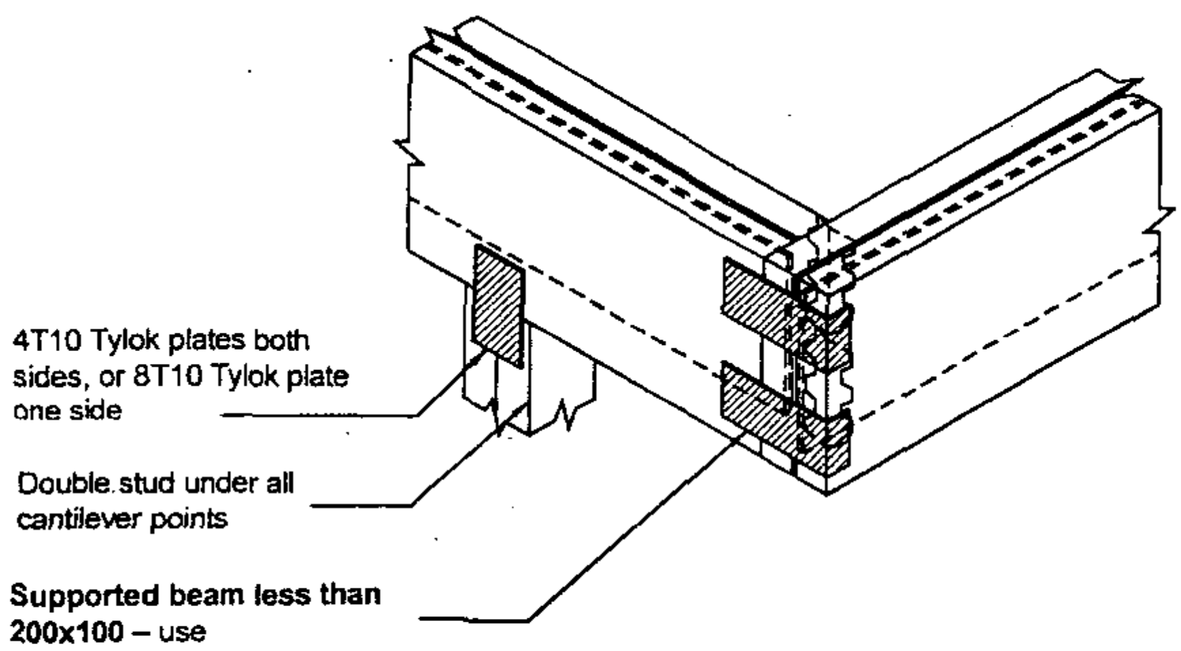

1) **Supported beam less than 200x100** – use 1/200x110x1mm nailon plate and 1 multigrip on the inside.
2) ***Supported beam 200x100 or larger*** – use 2/200x110x1mm nailon plates and 2 multigrips on the inside.

Cantilever Beam

Document Set ID: 614735
Version: 1, Version Date: 09/08/2004

Specification

Description

The GANG-NAIL FLITCH BEAM is a composite beam formed with a steel plate sandwiched between timber. The beam is manufactured with shot fired nails, fired through the timber into the steel.

The use of the GANG-NAIL FLITCH BEAM system eliminates the variations in timber performance and allows large openings to be spanned, such as garage doors, while keeping the lintel depth to an acceptable minimum.

Each beam is custom-made to measure and can be cambered to suit the application.

Sizes and Codes

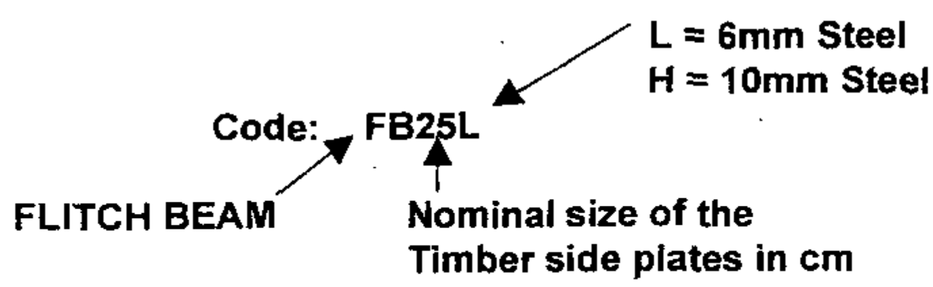

See page 5 for beam sizes

Storage and Handling

Consideration for the storage and handling of GANG-NAIL FLITCH BEAMS is the same as for trusses in general. However, particular care is required to ensure the beams stay dry by avoiding exposure to wet weather. The beams are marked to identify the right way up and special load bearing points if any.

Stability

Top Edge Restraint
All GANG-NAIL FLITCH BEAMS are to be restrained along their top edge at 900mm centres maximum for heavy roof and 1200mm centres maximum for light roof.
Floor beams are restrained along their top edge at 600mm centres maximum.

Timber Specification

Normal:	F5 machine stress graded Radiata Pine or MGP10 or No.1 framing Radiata Pine or No.1 framing Douglas Fir or equivalent grade of other species (refer MiTek New Zealand).
Architectural:	Select visually acceptable Grade as above.
Treatment:	Refer to NZS3602.
Moisture Content:	**All GANG-NAIL FLITCH BEAMS are made dry**, 18% or less at time of fabrication.

Durability

GANG-NAIL FLITCH BEAMS used in internal situations ("closed" as defined by NZS3604) require no further protection to satisfy 50 year durability requirements.
GANG-NAIL FLITCH BEAMS are not suitable for sheltered or exposed environments.

NPDC Approved
2 6 NOV 2003

Document Set ID: 614735
Version: 1, Version Date: 09/08/2004

FLITCH BEAM

Specification

Steel Specification

Steel flitch plates to be sourced from MiTek New Zealand Limited and ordered as:
FB15L, FB25L, FB20H, FB25H, FB30H.

Nail Specification

The nail shall have full penetration through the steel flitch and must have at least 75% bearing on the timber side plates, driven from both timber faces located as per GANG-NAIL construction details.

The nail is to be a minimum 3.7mm power driven fastener, 60mm to 65mm length range and applied by a licensed powered fastener operator. Washers may be used to get even penetration.

Design Data

The tables herein have been designed according to the following loads;

Roof

Dead Load	Lightweight roof Heavyweight roof Ceiling	0.25 kPa 0.65 kPa 0.20 kPa
Live load	0.25 kPa uniform	1.0kN point load

Note:
1) 750mm overhang has been included in the derivation of the tables.
2) Spans are horizontal measurements.
3) For heavy roofs over 30° pitch, multiply the roof span by 1.17 before using the tables:

Nominal Roof Span = 1.17 x Actual Roof Span

Floor

Dead Load	Particle board floor (including ceiling)	0.40 kPa
Live load	Domestic floor	1.5 kPa, 1.8kN
Permanent Load	G+0.4Q	1.0 kPa

Snow

0.5kPa snow load has been allowed for in the charts
For higher snow loads up to 1.0 kPa, multiply the actual roof span by 1.37 before using the tables:

Nominal Roof Span = 1.37 x Actual Roof Span

Wind

The tables are applicable for wind zones up to HIGH WIND, as defined by NZS3604.
For VERY HIGH WIND load conditions select the lintel using the HEAVY roof weight.

Deflection Criteria

Max long term deflection	Span / 450
Max live load deflection	Span / 400

Camber

The maximum recommended camber is span / 600 at midspan. No camber is required for cantilever beams. Some beams may be supplied with no camber if on site packing is to be used to provide an acceptable finish.
A Creep Factor (K2) = 1.3 has been used in the derivation of the charts

Availability

MiTek New Zealand is pleased to advise on the application of this product. Please note that **FLITCH BEAMS** are manufactured throughout New Zealand *only by accredited* **GANG-NAIL** *fabricators.*

NPDC Approved
2 6 NOV 2003

Document Set ID: 614735
Version: 1, Version Date: 09/08/2004

Beam Sizes

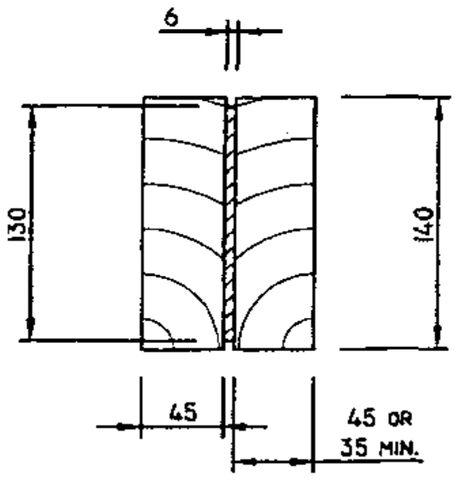

FB15L

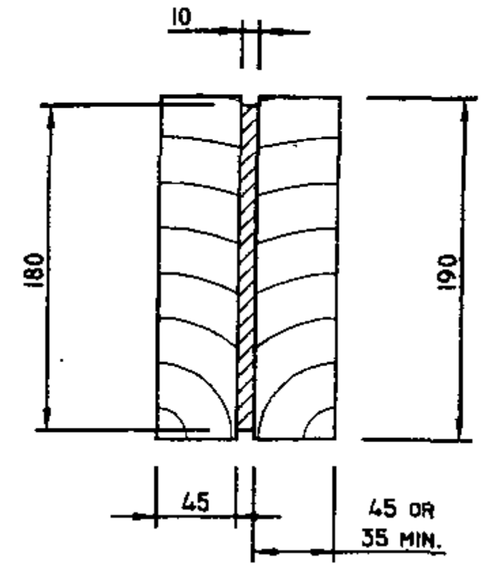

FB20H

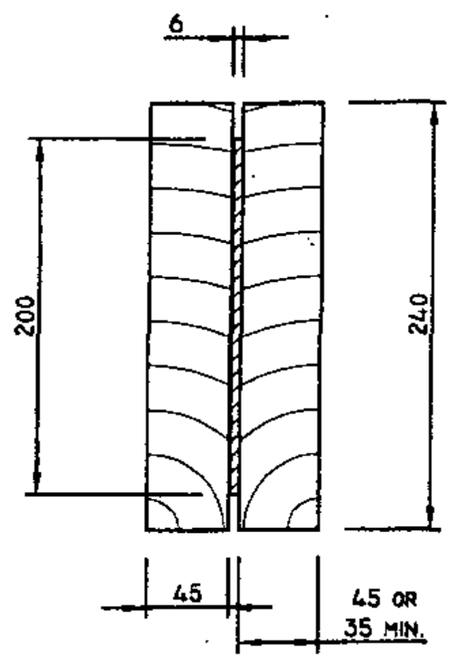

FB25L

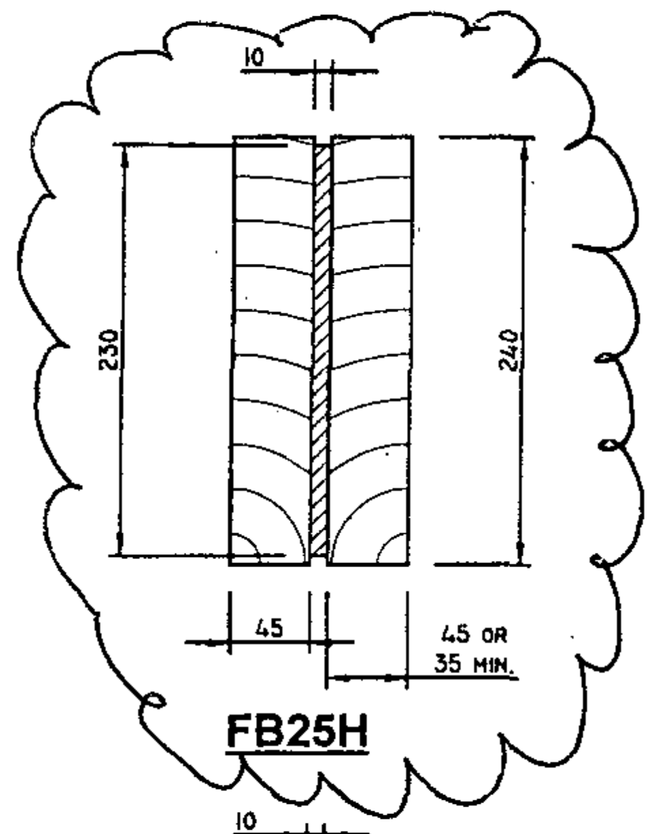

FB25H

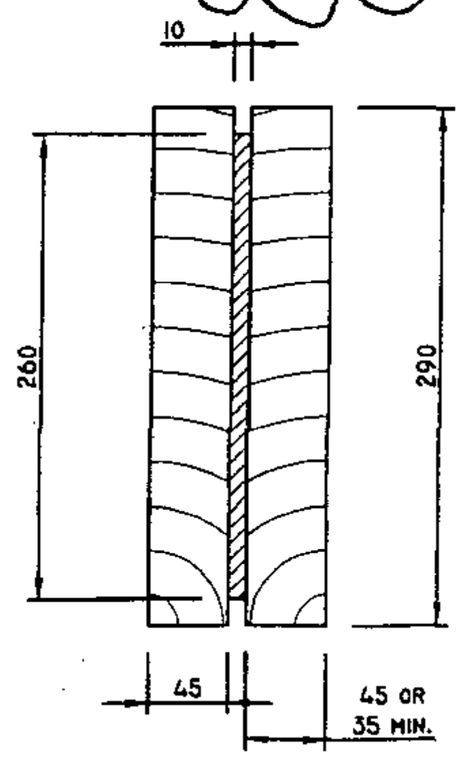

FB30H

PRODUCER STATEMENT

The **GANG-NAIL FLITCH BEAM** selection charts contained within this manual have been designed to comply with the relevant requirements of NZS4203 and NZS3603 of the approved documents issued by the Building Industry Authority and in accordance with sound and widely accepted engineering principles.

For and on behalf of MiTek New Zealand Ltd,

Stephen Anthony Coll
T.M. IPENZ, MNZIOB
Date: October, 2000

NOTE:
Timber side plates minimum overall thickness of 80mm (i.e. 35mm + 45mm).

NPDC Approved
26 NOV 2003

Document Set ID: 614735
Version: 1, Version Date: 09/08/2004

Selection Charts

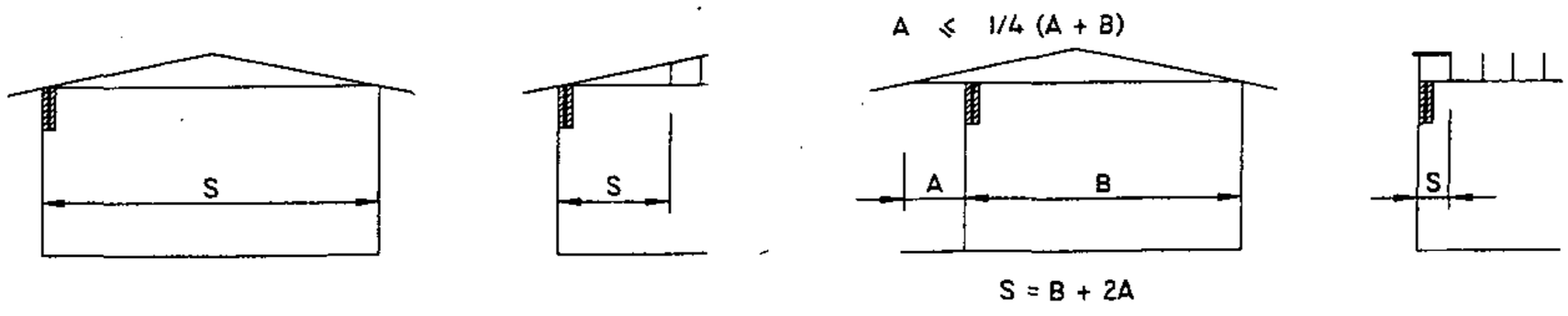

TABLE 1:
LINTELS SUPPORTING ROOF AND CEILING ONLY

	LINTEL SIZE	MAXIMUM LINTEL SPAN (m)												
		SUPPORTED ROOF SPAN 'S' (m)												
		3.0	4.0	5.0	6.0	7.0	8.0	9.0	10.0	11.0	12.0	13.0	14.0	15.0
LIGHT ROOF	FB15L	3.47	3.25	3.07	2.93	2.81	2.70	2.62	2.54	2.47	2.41	2.35	2.30	2.25
	FB20H	5.29	4.95	4.68	4.46	4.28	4.13	3.99	3.87	3.77	3.67	3.58	3.50	3.43
	FB25L	5.63	5.27	4.98	4.75	4.56	4.39	4.25	4.12	4.01	3.90	3.81	3.73	3.65
	FB25H	6.74	6.30	5.96	5.68	5.45	5.25	5.08	4.93	4.79	4.67	4.56	4.46	4.37
	FB30H	7.79	7.28	6.89	6.57	6.30	6.07	5.87	5.70	5.54	5.40	5.27	5.16	5.05
HEAVY ROOF	FB15L	2.81	2.63	2.48	2.37	2.27	2.19	2.12	2.05	2.00	1.95	1.90	1.86	1.82
	FB20H	4.28	4.00	3.79	3.61	3.46	3.34	3.23	3.13	3.05	2.97	2.90	2.84	2.78
	FB25L	4.56	4.26	4.03	3.84	3.69	3.55	3.43	3.33	3.24	3.16	3.08	3.02	2.95
	FB25H	5.45	5.10	4.82	4.60	4.41	4.25	4.11	3.99	3.88	3.78	3.69	3.61	3.53
	FB30H	6.30	5.89	5.57	5.31	5.10	4.91	4.75	4.61	4.48	4.37	4.27	4.17	4.09

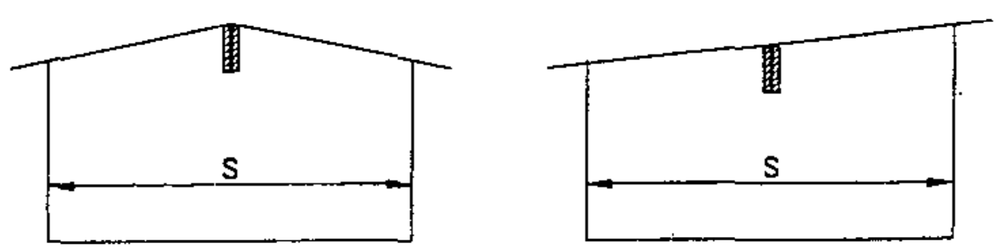

TABLE 2:
FLITCH BEAM RIDGE BEAM SUPPORTING ROOF AND SARKING OR CEILING (RAFTERS @ 1200mm CRS MAX)

	LINTEL SIZE	MAXIMUM LINTEL SPAN (m)										
		SUPPORTED ROOF SPAN 'S' (m)										
		5.0	6.0	7.0	8.0	9.0	10.0	11.0	12.0	13.0	14.0	15.0
LIGHT ROOF	FB15L	3.35	3.15	2.99	2.86	2.75	2.66	2.58	2.50	2.44	2.38	2.32
	FB20H	5.11	4.81	4.57	4.37	4.20	4.06	3.93	3.82	3.72	3.63	3.54
	FB25L	5.44	5.12	4.86	4.65	4.47	4.32	4.18	4.06	3.95	3.86	3.77
	FB25H	6.51	6.12	5.82	5.56	5.35	5.16	5.00	4.86	4.73	4.62	4.51
	FB30H	7.52	7.08	6.72	6.43	6.18	5.97	5.78	5.62	5.47	5.34	5.21
HEAVY ROOF	FB15L	2.71	2.55	2.42	2.32	2.23	2.15	2.08	2.02	1.97	1.92	1.88
	FB20H	4.13	3.89	3.70	3.53	3.40	3.28	3.18	3.09	3.01	2.93	2.87
	FB25L	4.40	4.14	3.93	3.76	3.62	3.49	3.38	3.29	3.20	3.12	3.05
	FB25H	5.26	4.95	4.70	4.50	4.33	4.18	4.05	3.93	3.83	3.73	3.65
	FB30H	6.08	5.72	5.44	5.20	5.00	4.83	4.68	4.54	4.42	4.32	4.22

NPDC Approved
2 6 NOV 2003

Document Set ID: 614735
Version: 1, Version Date: 09/08/2004

FLITCH BEAM

Fixing And Support Details

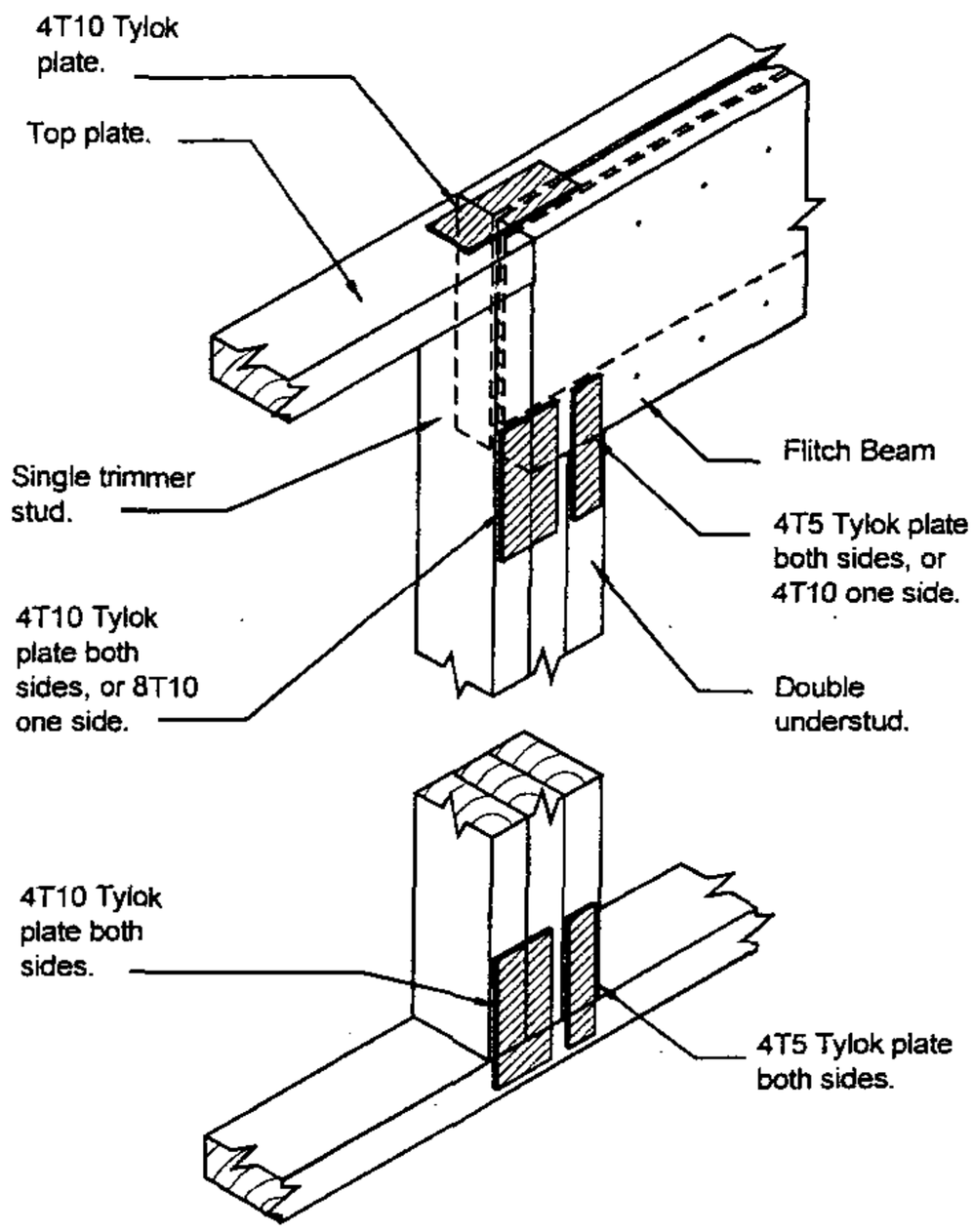

Simply Supported Beam

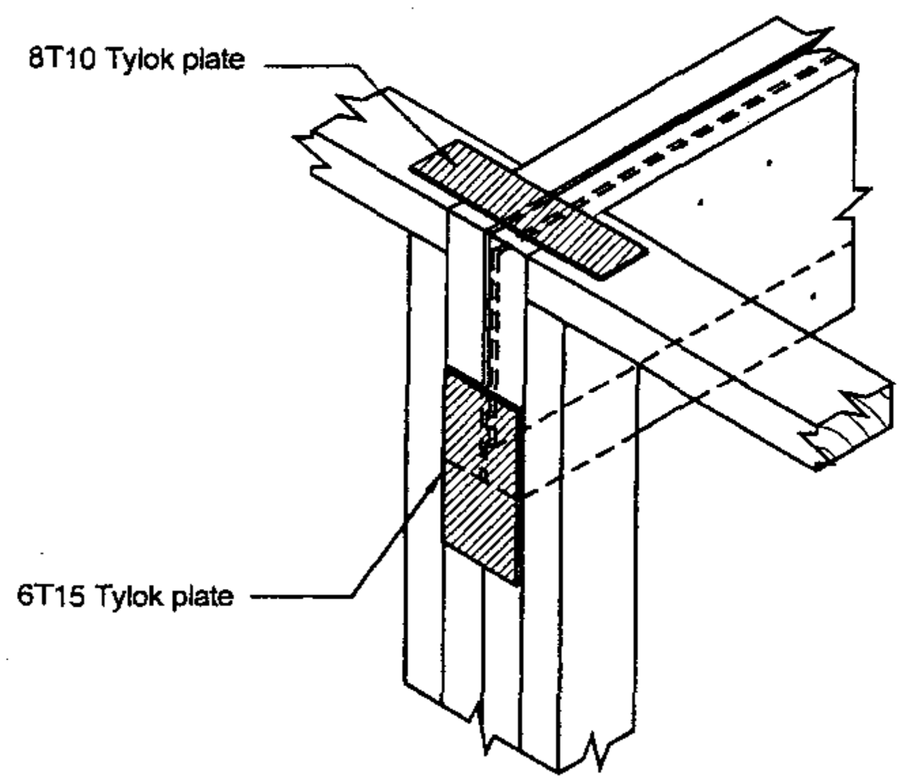

Beam Pocket

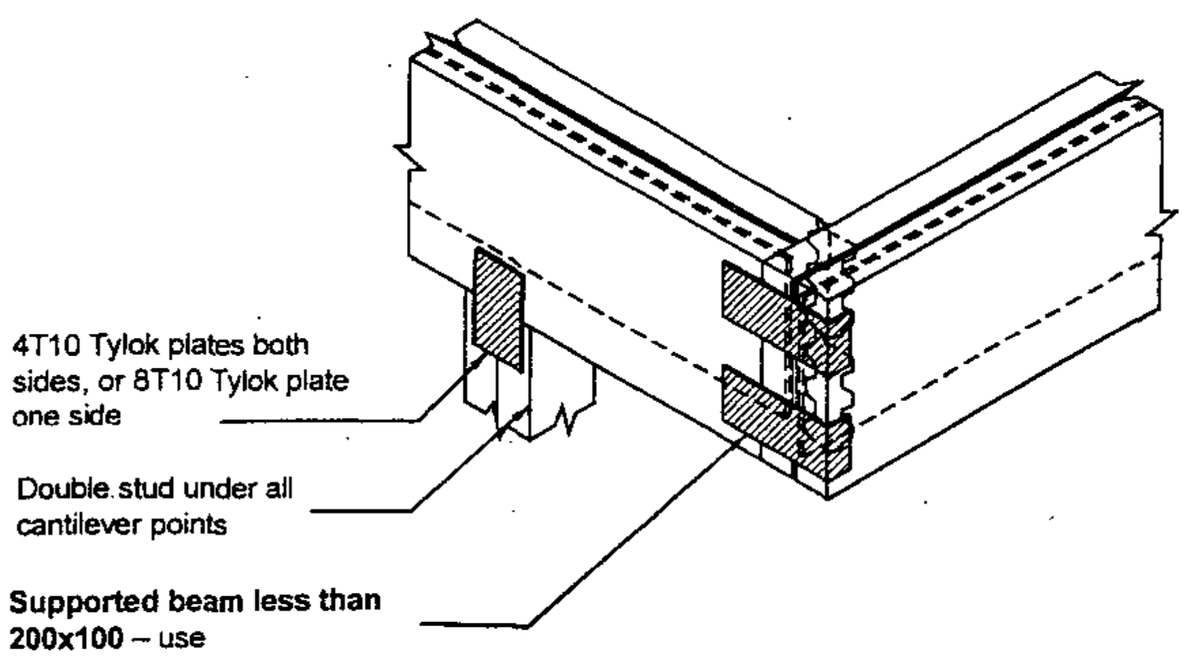

1) **Supported beam less than 200x100** – use 1/200x110x1mm nailon plate and 1 multigrip on the inside.
2) **Supported beam 200x100 or larger** – use 2/200x110x1mm nailon plates and 2 multigrips on the inside.

Cantilever Beam

NPDC Approved
26 NOV 2003

Document Set ID: 614735
Version: 1, Version Date: 09/08/2004

Smoke detectors
are required as
part of this project

OFFICE COPY

PLANS AND SPECIFICATIONS APPROVED FOR TYPE, USE, SITING, COVERAGE AND CONSTRUCTION, AS IN ACCORDANCE WITH ALL RELEVANT ACTS REGULATIONS AND BY-LAWS ADMINISTERED BY THE NEW PLYMOUTH DISTRICT COUNCIL.

DATE

APPROVED: 12.11.03

THESE PLANS AND SPECIFICATIONS ARE THE PROPERTY OF THE NEW PLYMOUTH DISTRICT COUNCIL.

56237/56238 28.10.03

Forsyth

alteration & additions

26 Bayly Road - New Plymouth

ARCHITECTURAL DRAWING INDEX

A0-00- GENERAL

COVER & INDEX

A2-00 SETOUT / FRAMING PLANS

A2 01 SITE & EXISTING FLOOR PLAN
A2 02 NEW FLOOR AND FLOOR JOIST LAYOUT
A2 03 PLUMBING & DRAINAGE PLAN

A3-00 SECTIONS

A3 01 SECTION A-A
A3 01 SECTION B-B & C-C

A4-00 ELEVATIONS

A4 01 ELEVATIONS

A5-00 CONSTRUCTION DETAILS

A5 01 DETAILS
A5 02 WINDOW DETAILS

Job No. 03-38

Date: October 03

NPDC Approved
25 NOV 2003

Document Set ID: 614735
Version: 1, Version Date: 09/06/2004

DO NOT SCALE DRAWINGS.
CONTRACTORS MUST VERIFY ALL DIMENSIONS ON SITE PRIOR TO COMMENCING ANY WORK

SPECIFICATION

PRELIMINARY & GENERAL
All workmanship and materials shall comply with the Building Act, the Building Regulations, the New Zealand Building Code, and all relevant Standards.

All materials shall be installed in accordance with the Manufacturer's recommendations.

The OWNER shall arrange and pay all consent fees associated with the works.
The OWNER shall insure for all construction from date of commencement until completion of the contract works.

The extent of work for all trades shall be as shown or implied on the drawings.

DEMOLITION & EXCAVATION
Preliminary and General as noted above.
Remove and dispose of all waste material from site.

CONCRETE WORK
Preliminary and General as noted above.
All concrete shall be ordinary grade concrete with a minimum compressive strength of 20mpa at 28 days standard cured.

The minimum height of finished concrete slab-on-ground floors above adjoining finished ground level shall be 225mm to unprotected ground & 150mm to protected ground ie concrete path or paving.

Saw cuts shall be 6mm wide by 1/4 the thickness of the slab saw cut slabs into max. dimensions set out in appendix e NZS 3604

CARPENTRY AND JOINERY
Preliminary and General as noted above.
Comply with NZS 3604.

TIMBER TREATMENTS
H5 Timber piles & poles
H4 Other external timber in contact with ground
H3/CCA Floor framing
External framing clear of ground
H3/CCA or H3/LOSP
Roof & ceiling framing
External walls & building envelope framing (but excluding floor framing)
H1 All internal timber not associated with floor, roof, ceiling framing &/or building envelope

Ceiling insulation shall be R2
Wall insulation shall be R1.8

ROOFING
Preliminary and General as noted above.

PLUMBING & DRAINAGE
Preliminary and General as noted above.
All work shall comply with the NZBC section G13.

ELECTRICAL
Preliminary and General as noted above.
Liaise with the Owner re extent.

PAINTING
Preliminary and General as noted above.
Liaise with the Owner over extent.

GLAZING
Preliminary and General as noted above.
To comply with NZS 4223.

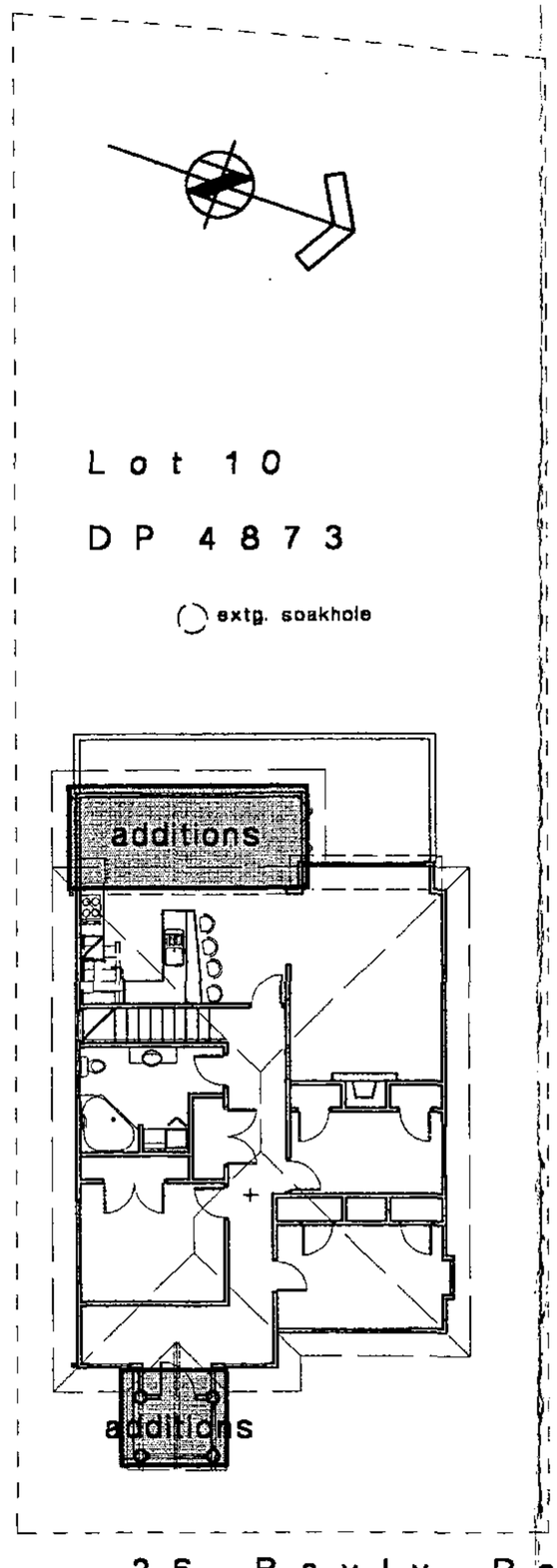

site plan
SCALE 1:200

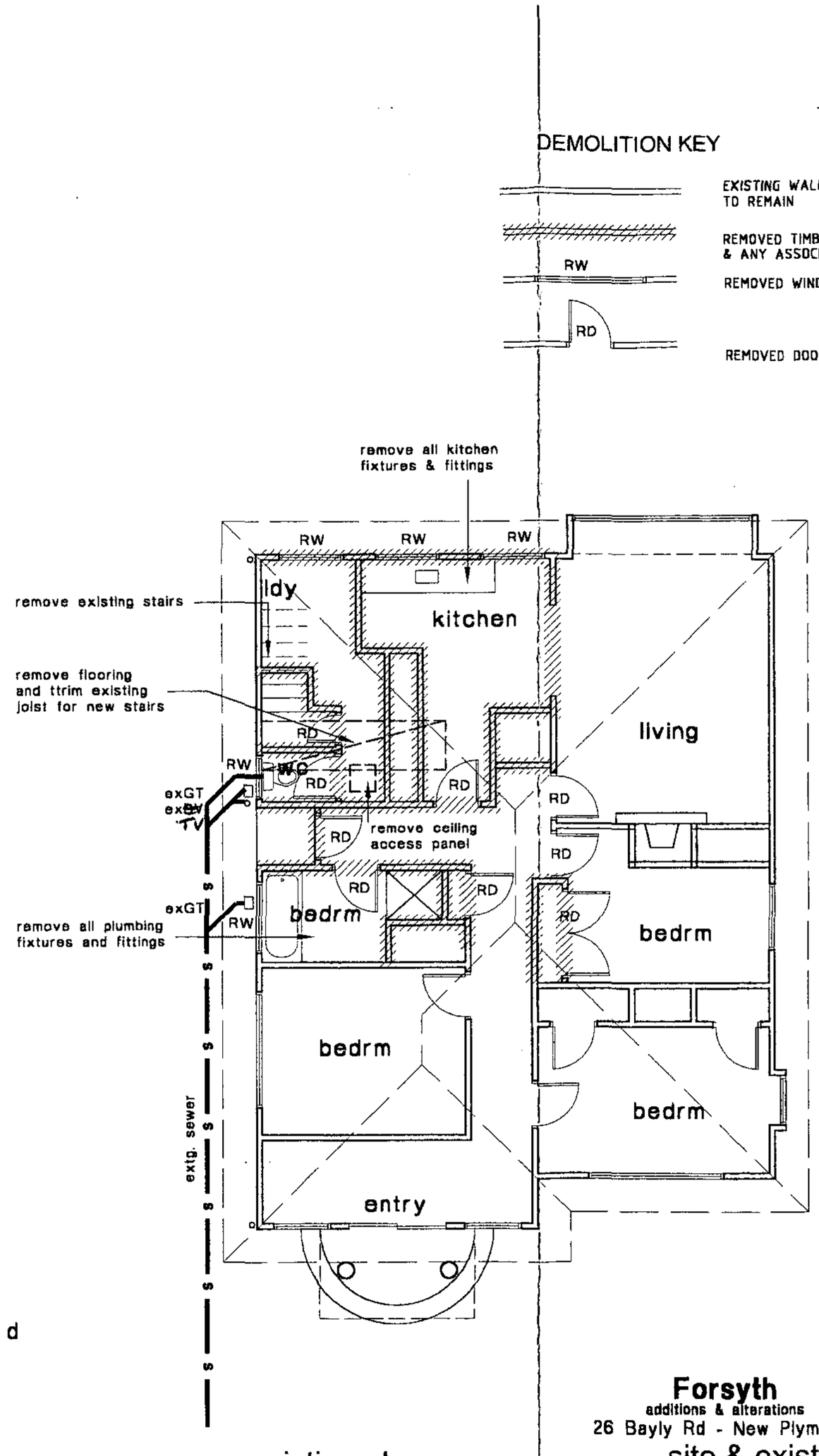

existing plan
SCALE 1:100

Forsyth
additions & alterations
26 Bayly Rd - New Plymouth

site & existing plans

DRAWING a2-01 DRAWN dh
ORIGINAL SIZE A3 JOB NO. 03-38
SCALE 1:200 , 1:100

CLELANDS CONSTRUCTION LIMITED

Approved
7 NOV 2003

Document Set ID: 614735
Version: 1, Version Date: 09/08/2004

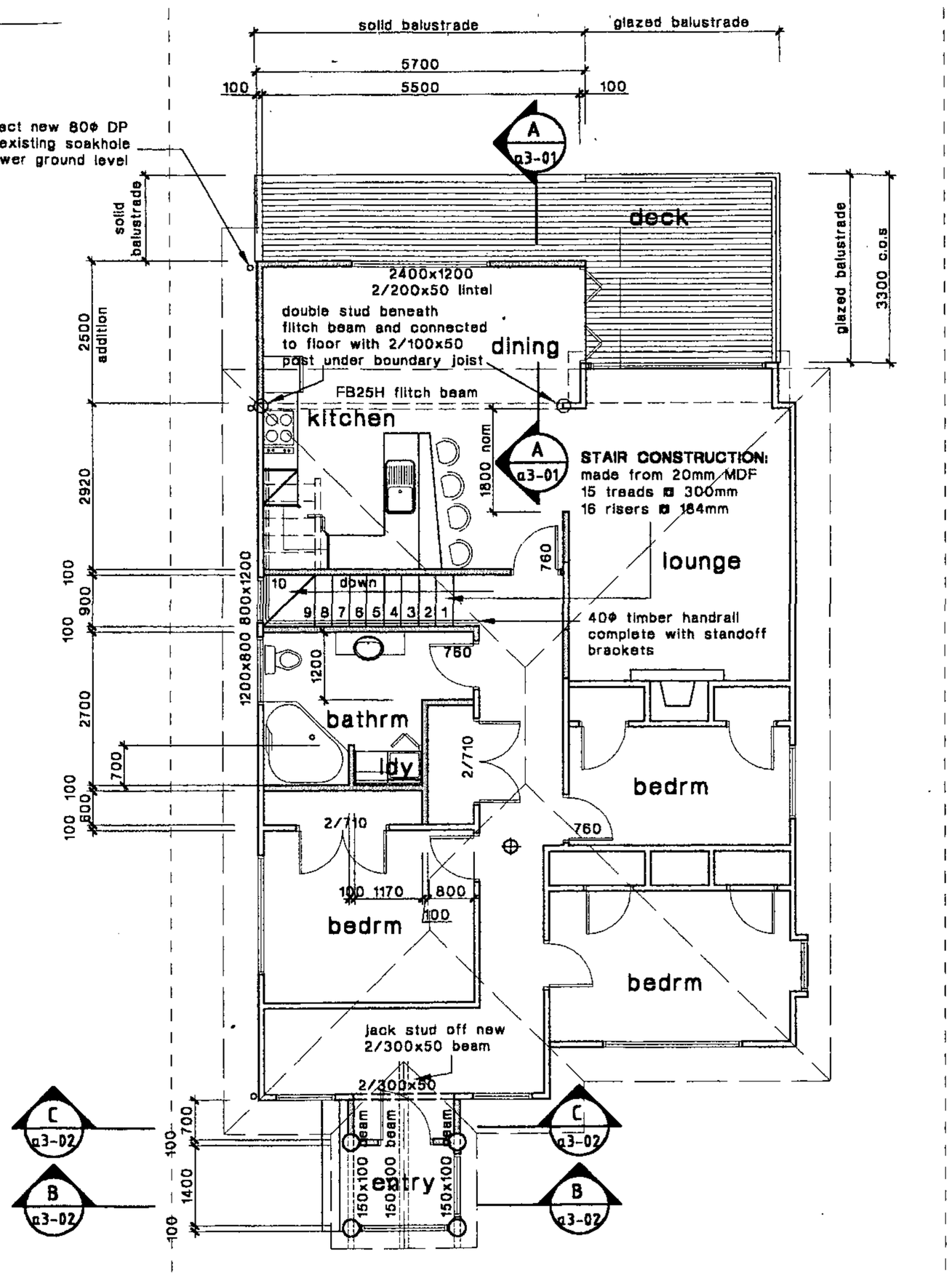

new plan
SCALE 1:100

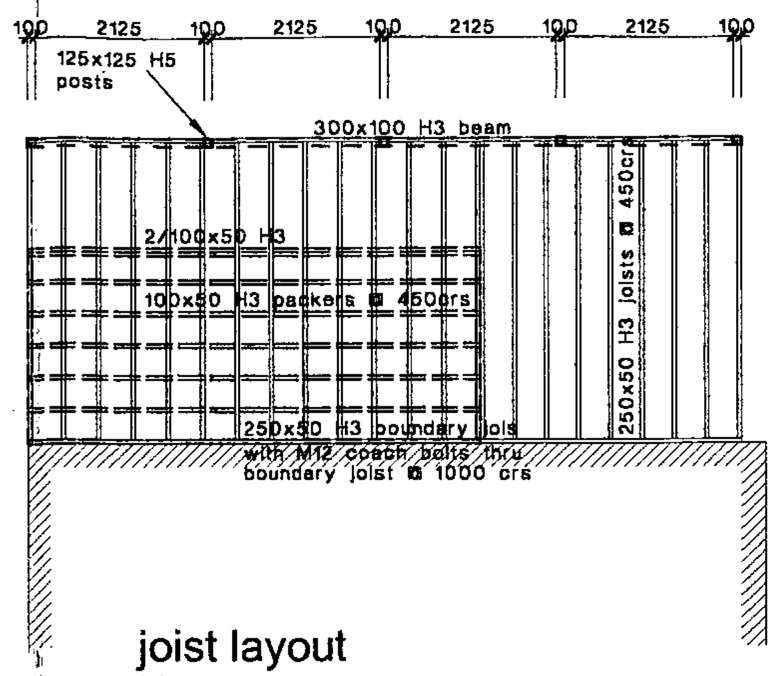

joist layout
SCALE 1:100

DO NOT SCALE DRAWINGS.
CONTRACTORS MUST VERIFY ALL DIMENSIONS ON SITE PRIOR TO COMMENCING ANY WORK

NEW CONSTRUCTION KEY

NEW TIMBER FRAMED WALLS

EXISITNG TIMBER FRAMED WALLS

LxH 1200x800 — NEW WINDOWS

760 — NEW DOORS

DOUBLE STUD UNDER BEAM

SD SMOKE DETECTOR

NOTES

ALL CONSTRUCTION SHALL COMPLY WITH NZS 3604 UNLESS NOTED OTHERWISE

ALL CONCRETE CONSTRUCTION SHALL COMPLY WITH NZS 3109

ELELANDS CONSTRUCTION LIMITED

Forsyth
additions & alterations
26 Bayly Rd - New Plymouth
new plan

NPDC APPROVED
26 NOV 2003

DRAWING a2-02 DRAWN dh
ORIGINAL SIZE A3 JOB NO. 03-38
SCALE 1:100

Document Set ID: 614735
Version: 1, Version Date: 09/06/2004

DO NOT SCALE DRAWINGS.
CONTRACTORS MUST VERIFY ALL DIMENSIONS ON SITE PRIOR TO COMMENCING ANY WORK

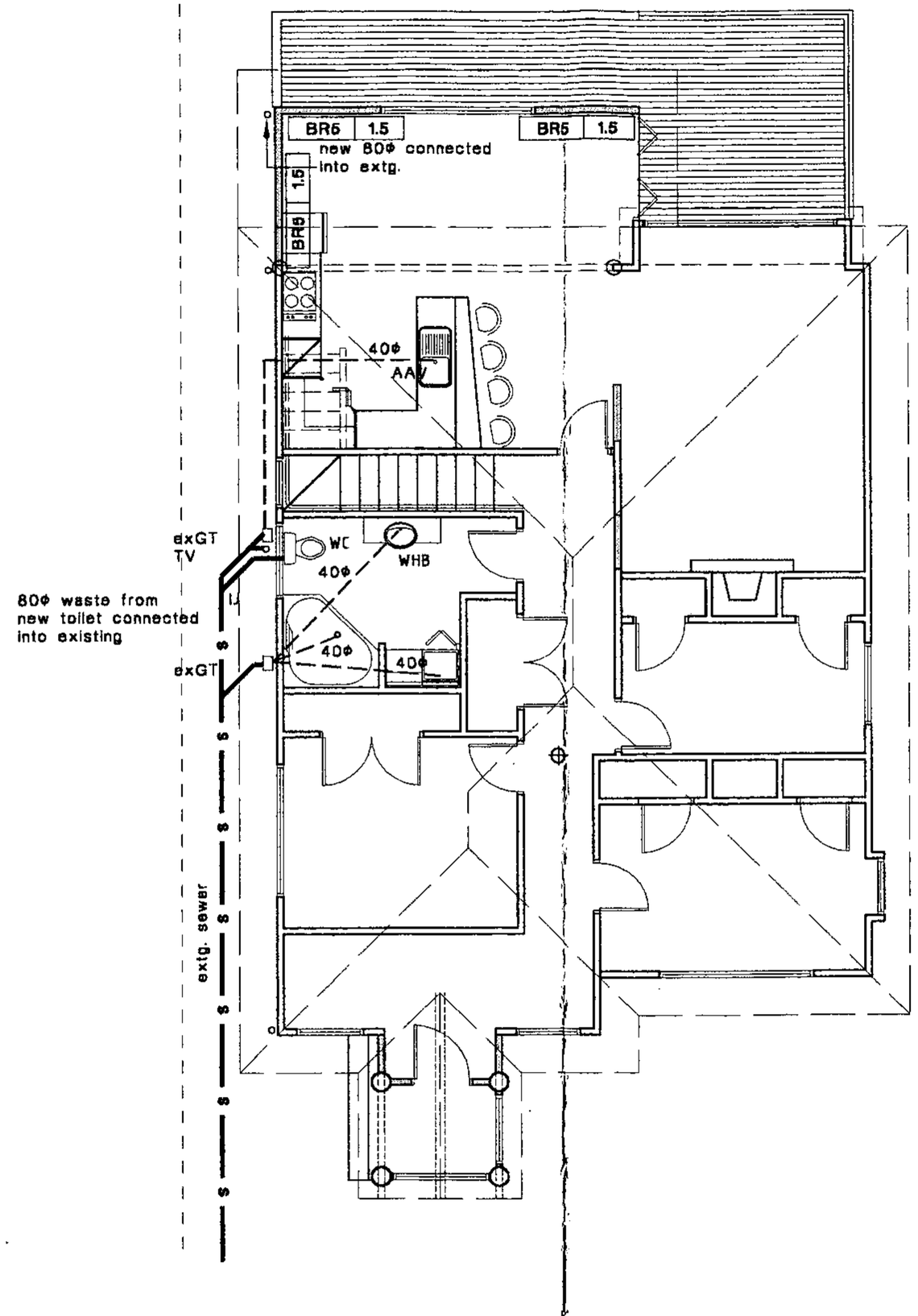

plumbing plan
SCALE 1:100

PLUMBING & DRAINAGE KEY

—— S —— S ——	SEWER DRAINS
- - - - - - - -	WASTE PIPES
GT	GULLY TRAPS
IJ	INSPECTION JUNCTION
BV	BACK VENT
WC	WC PAN
WHB	WASH HAND BASIN

NOTES

FOUL WATER SANITARY PLUMBING SHALL COMPLY WITH NZBC G13/AS1 & G13/AS2

STORMWATER DRAINAGE SHALL COMPLY WITH NZBC E1/AS1

SIZE ALL WASTES & DRAINS TO COMPLY WITH THE ABOVE, LAY ALL DRAINS TO ACCEPTABLE FALLS

WATER SUPPLY & RETICULATION SHALL COMPLY WITH NZBC G12/AS1

GAS SUPPLY & RETICULATION SHALL COMPLY WITH G11/AS1

ALL DRAINS SHALL BE PVC
ALL WATER SUPPLY PIPES SHALL BE COPPER

Bracing

bracing type
bracing length

BR5 | 1.5

ELELANDS CONSTRUCTION LIMITED

Forsyth
additions & alterations
26 Bayly Rd - New Plymouth
plumbing plan

NPDC Approv
2 8 NOV 2003

DRAWING a2-03 DRAWN dh
ORIGINAL SIZE A3 JOB NO. 03-38
SCALE 1:100

Document Set ID: 614735
Version: 1, Version Date: 09/08/2004

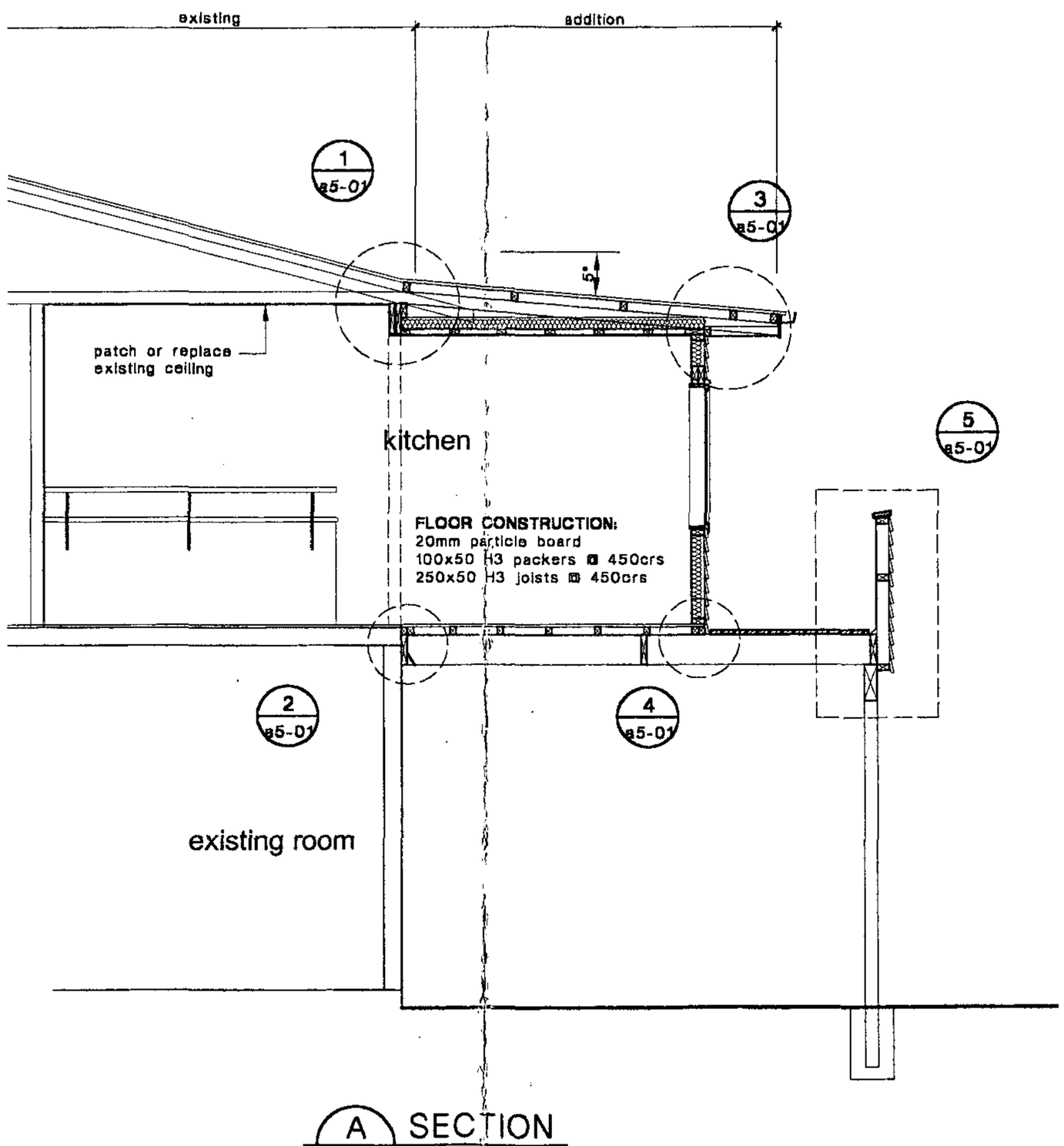

A a2-02 SECTION
SCALE 1:20

DO NOT SCALE DRAWINGS.
CONTRACTORS MUST VERIFY ALL DIMENSIONS ON SITE PRIOR TO COMMENCING ANY WORK

ROOF CONSTRUCTION:
5° roof pitch
0.4BMT ZR8 roof cladding to match existing
selfsupporting roofing underlay
75x50 purlins @ 900crs
100x50 rafters @ 600crs
100x50 ceiling joists @ 600crs
75x40 ceiling battens @ 400crs
10mm gibboard ceiling lining
R1.8 ceiling insulation batts

spouting to match existing
fixed to ex180x35 fascia
board

SOFFIT CONSTRUCTION:
75x50 soffit framing @ 600crs
4.5mm hardies soffit lining complete
with PVC jointers

WALL CONSTRUCTION:
timber weather board to match
existing
heavy duty building paper
100x50 timber framing studs @
600crs
10mm gibboard wall lining
R1.8 wall insulation batts

BALUSTRADE CONSTRUCTION:

SOLID BALUSTRADE
ex150x50 H3 handrail fixed to 15°
slope
100x50 H3 top plate
100x100 H3 posts @ 1500crs max
100x50 H3 bottom plate
100x50 H3 timber framing between
posts
timber weather to match (to outside
face)
7mm hardiflex (to inside face)

GLAZED BALUSTRADE
ex150x50 H3 handrail fixed to 15°
slope
100x50 H3 top plate
aluminium channel
12mm toughend glass
(refer details)

DECK CONSTRUCTION:

ex100x40 H3 grip tread decking
250x50 H3 joists @ 450crs
fixed to
300x100 H3 beam
fixed to
100x100 H5 tanapost with Bowmac
BS48 & BS38 brackets complete
with M12 coach bolts
100x100 H5 post in 350x350x600
deep concrete footing

ELELANDS CONSTRUCTION LIMITED

Forsyth
additions & alterations
26 Bayly Rd - New Plymouth
section A-A

DRAWING a3-01 DRAWN dh
ORIGINAL SIZE A3 JOB NO. 03-38
SCALE 1:50

Approved
28 NOV 2003

Document Set ID: 614735
Version: 1, Version Date: 09/08/2004

DO NOT SCALE DRAWINGS.
CONTRACTORS MUST VERIFY ALL DIMENSIONS ON SITE PRIOR TO COMMENCING ANY WORK

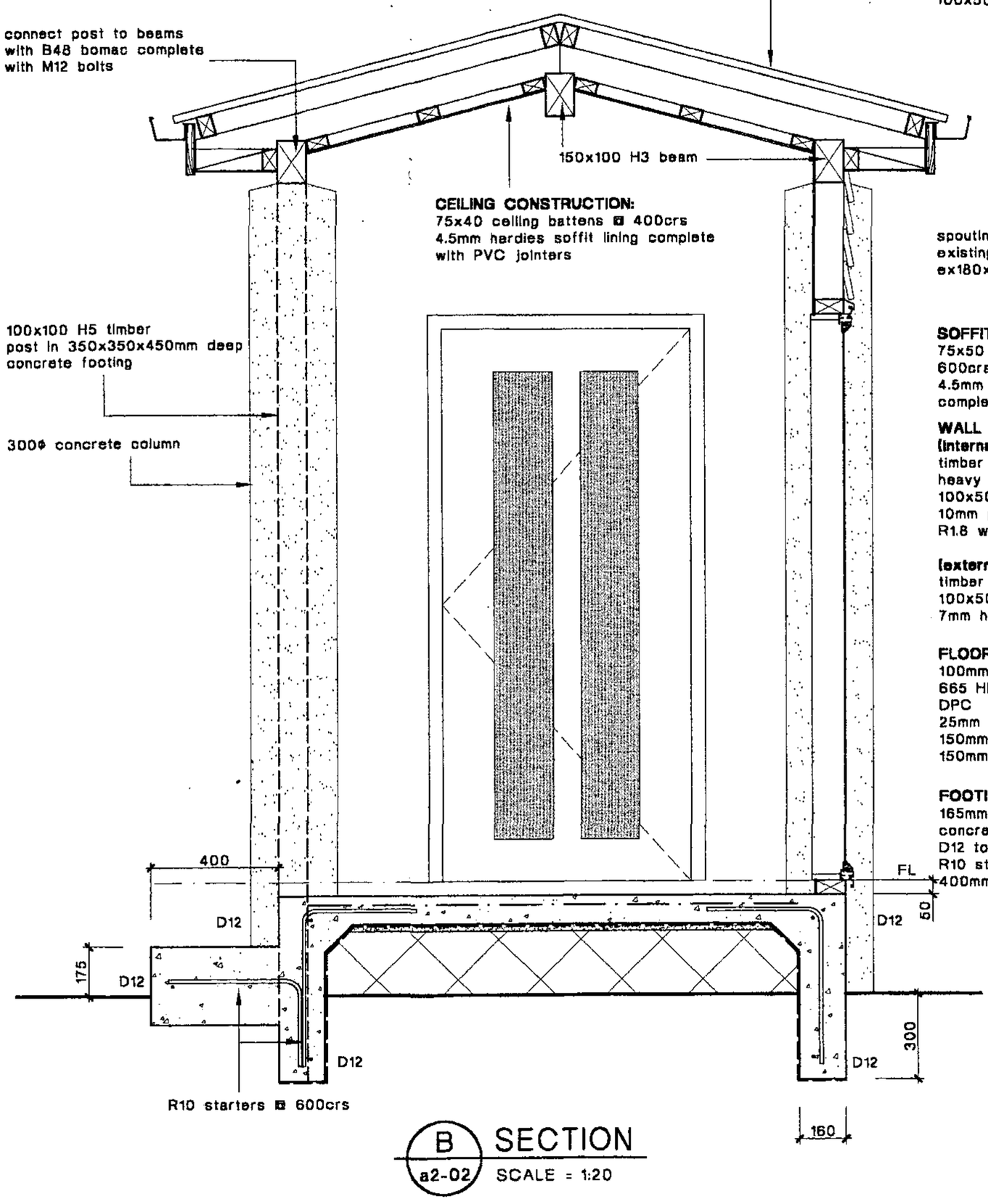

B SECTION
a2-02 SCALE = 1:20

ROOF CONSTRUCTION:
Roof pitch to match existing
0.48MT ZR8 roof cladding to match existing
selfsupporting roofing underlay
75x50 purlins @ 900crs
100x50 rafters @ 600crs

spouting to match
existing fixed to
ex180x35 fascia board

SOFFIT CONSTRUCTION:
75x50 soffit framing @
600crs
4.5mm hardies soffit lining
complete with PVC jointers

WALL CONSTRUCTION:
(internal)
timber weather board to match existing
heavy duty building paper
100x50 timber framing studs @ 600crs
10mm gibboard wall lining
R1.8 wall insulation batts

(external)
timber weather board to match existing
100x50 H3 timber framing studs @ 600crs
7mm hardiflex

FLOOR CONSTRUCTION:
100mm thick concrete slab
665 HRC mesh placed centrally
DPC
25mm sandblinding
150mm compacted hardfill in layers
150mm

FOOTING CONSTRUCTION:
165mm x 300mm deep (min) strip
concrete footing
D12 top and bottom
R10 starters @ 600crs turned
400mm into slab

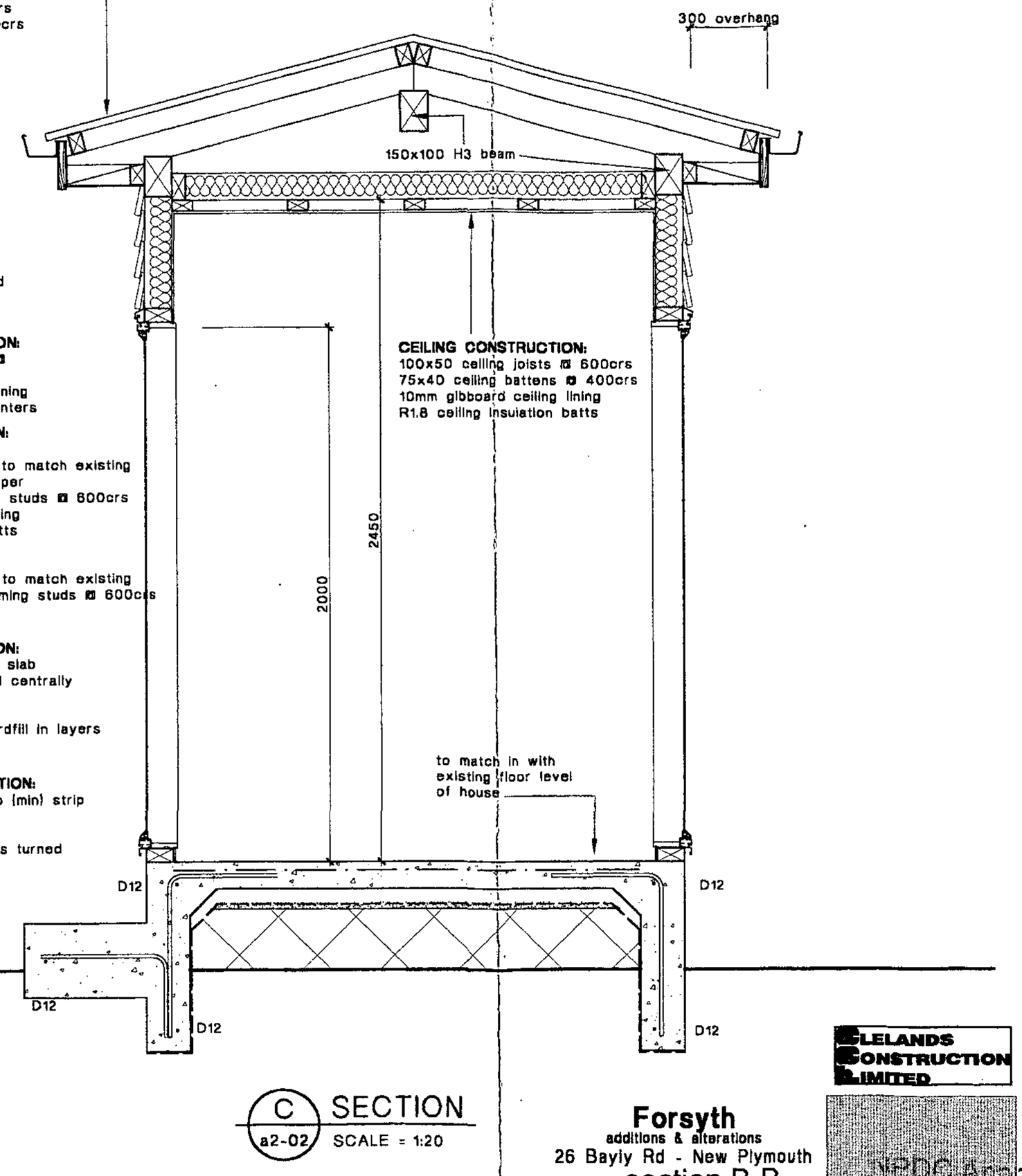

C SECTION
a2-02 SCALE = 1:20

LELANDS CONSTRUCTION LIMITED

Forsyth
additions & alterations
26 Bayly Rd - New Plymouth
section B-B

ORIGINAL SIZE A3 JOB NO. 03-38
SCALE

NPDC Approved
28 NOV 2003

Document Set ID: 614735
Version: 1, Version Date: 09/08/2004

Distance from house wall to boundary will be no less 1500mm.

DO NOT SCALE DRAWINGS.
CONTRACTORS MUST VERIFY ALL DIMENSIONS ON SITE PRIOR TO COMMENCING ANY WORK

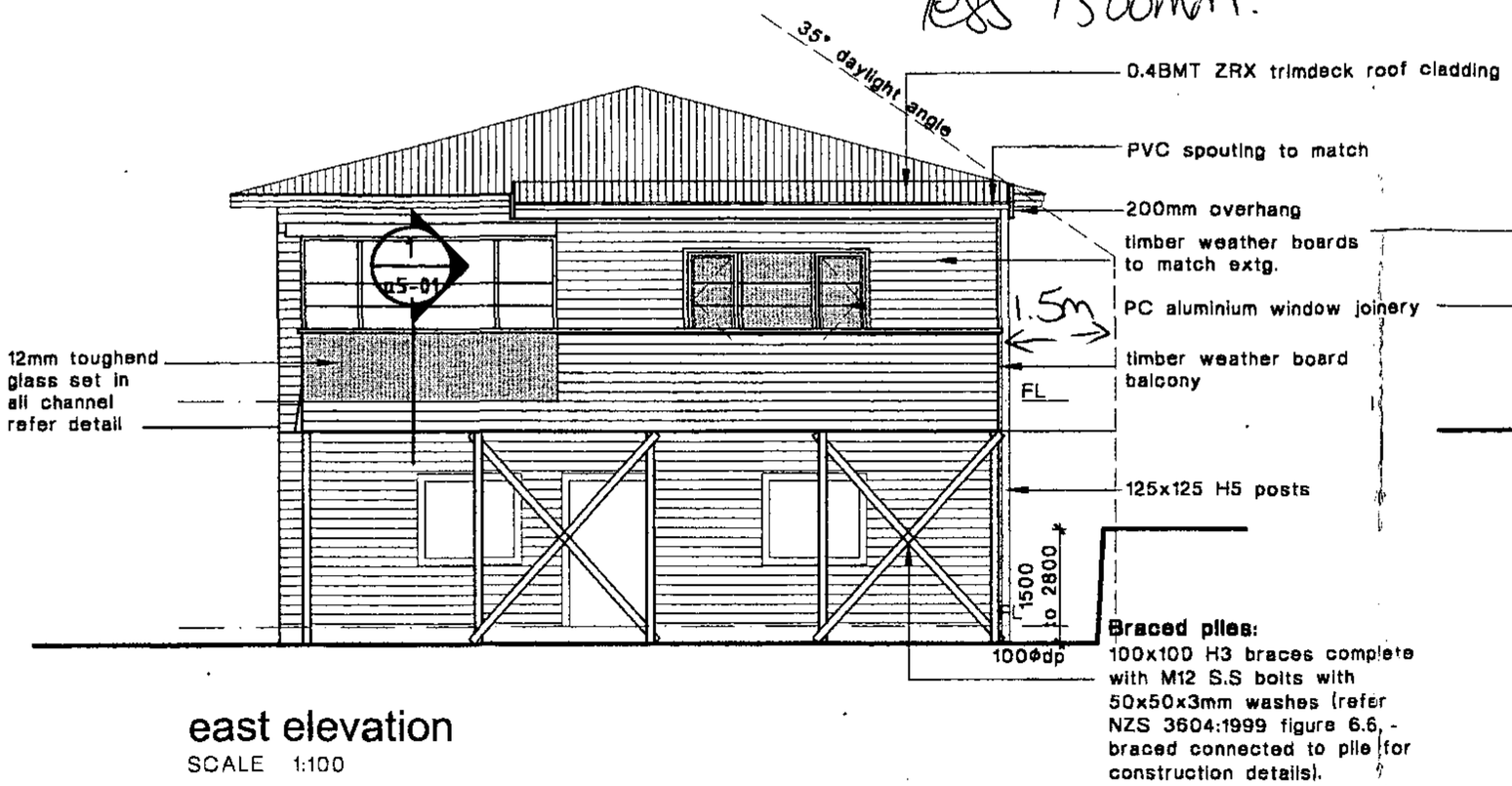

east elevation
SCALE 1:100

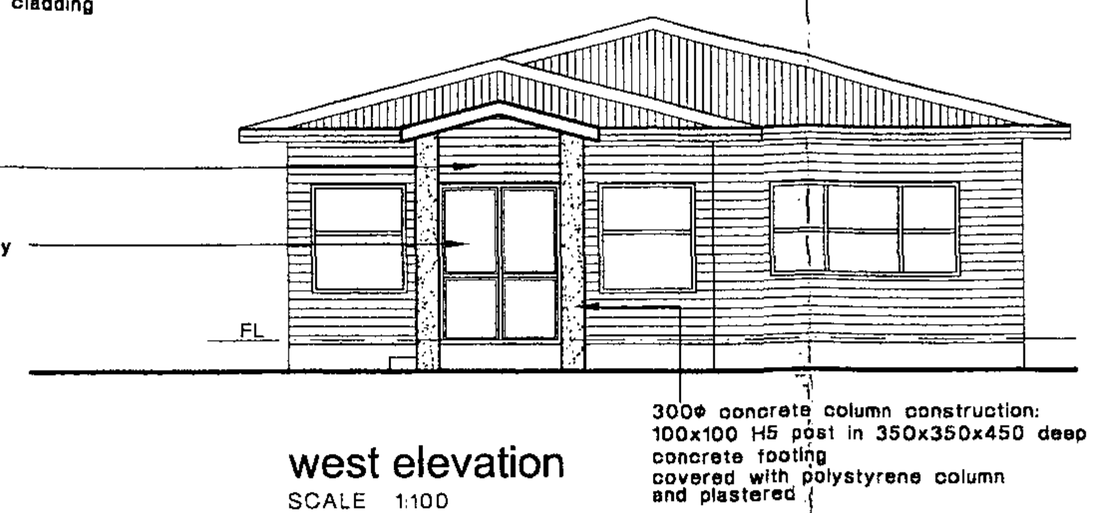

west elevation
SCALE 1:100

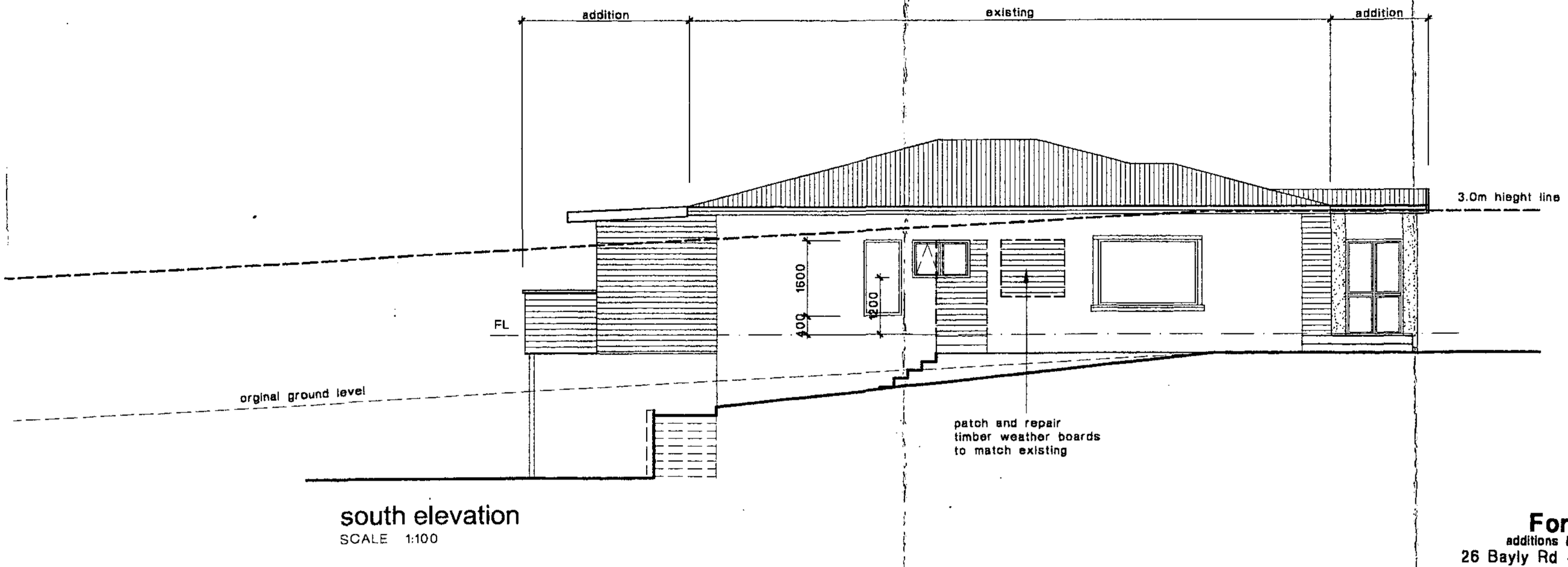

south elevation
SCALE 1:100

ELELANDS CONSTRUCTION LIMITED

Forsyth
additions & alterations
26 Bayly Rd - New Plymouth

elevations

DRAWING a4-01 DRAWN dh
ORIGINAL SIZE A3 JOB NO. 03-38
SCALE 1:100

NPDC Approved
25 NOV 2003

Document Set ID: 614735
Version: 1, Version Date: 09/08/2004

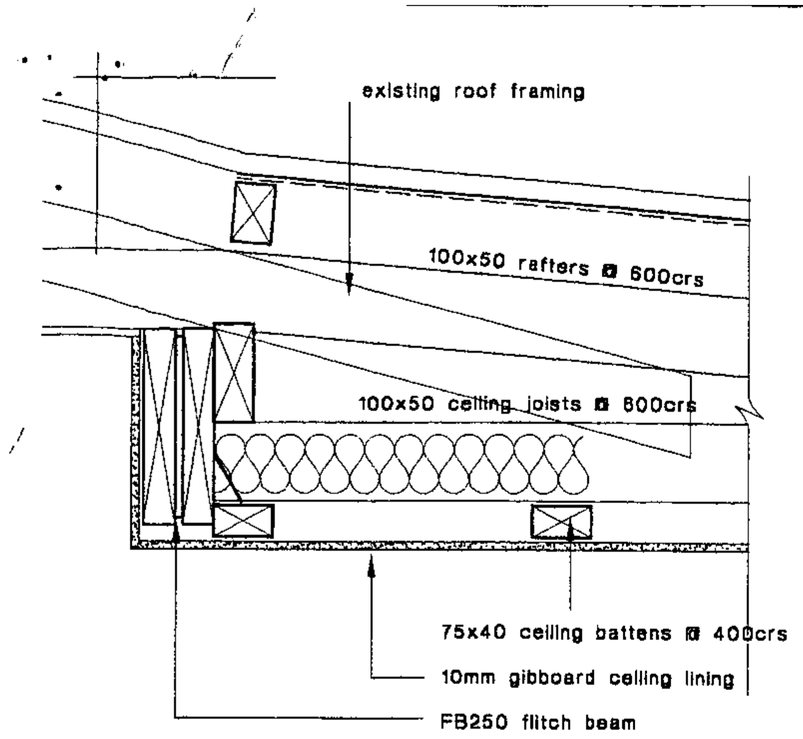

1 a3-01 DETAIL
SCALE = 1:10

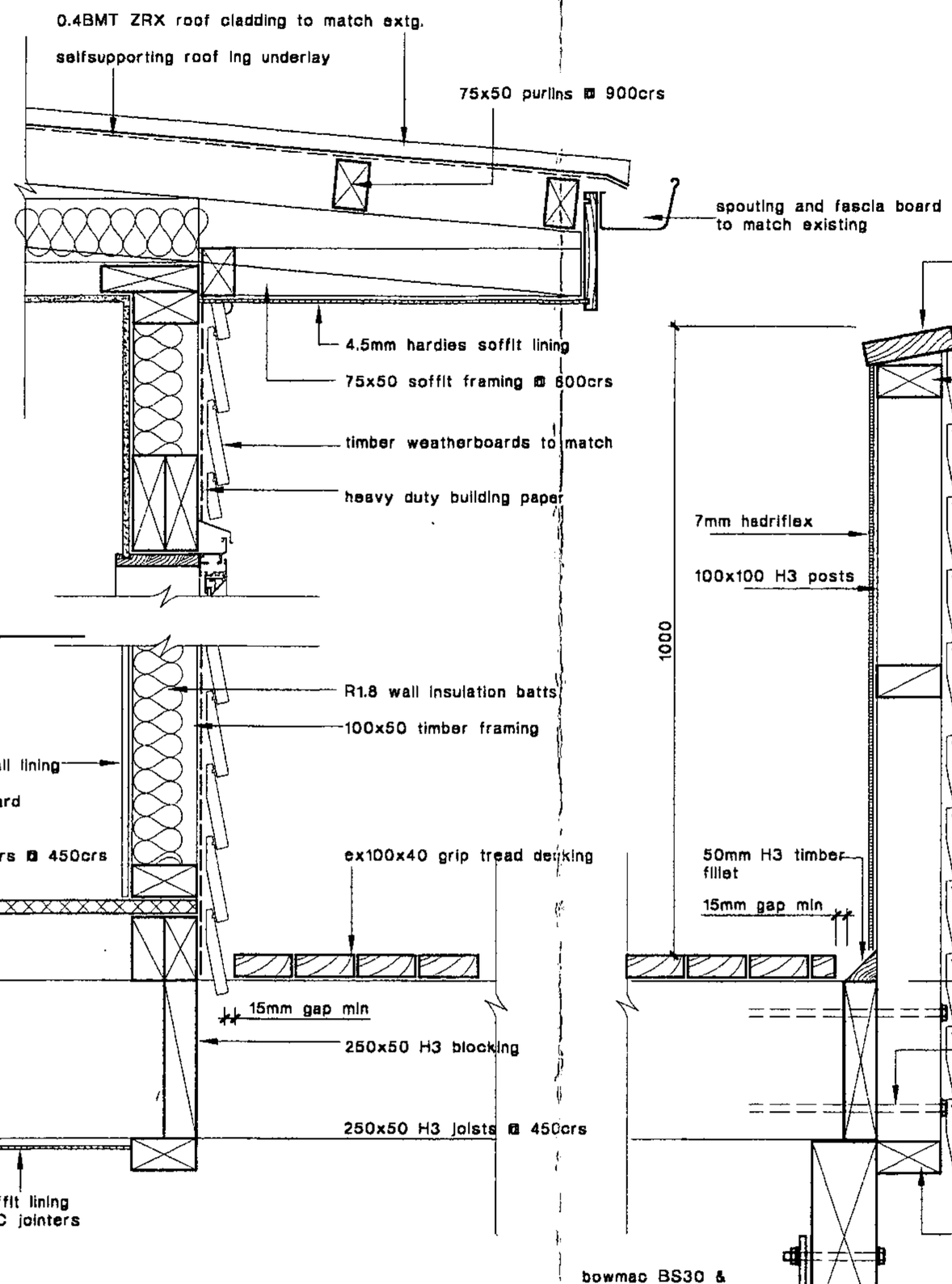

3 a3-01 DETAIL
SCALE = 1:10

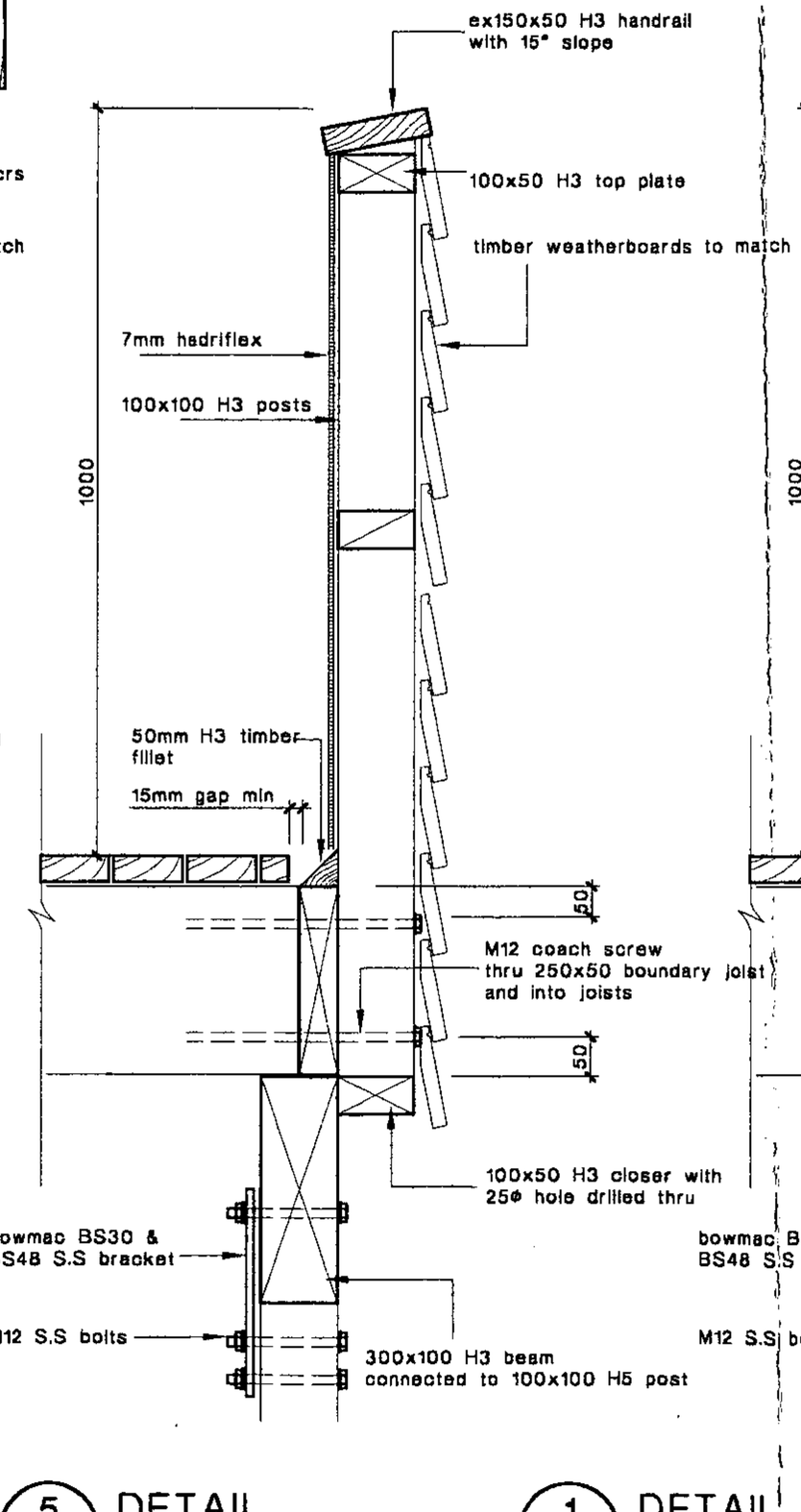

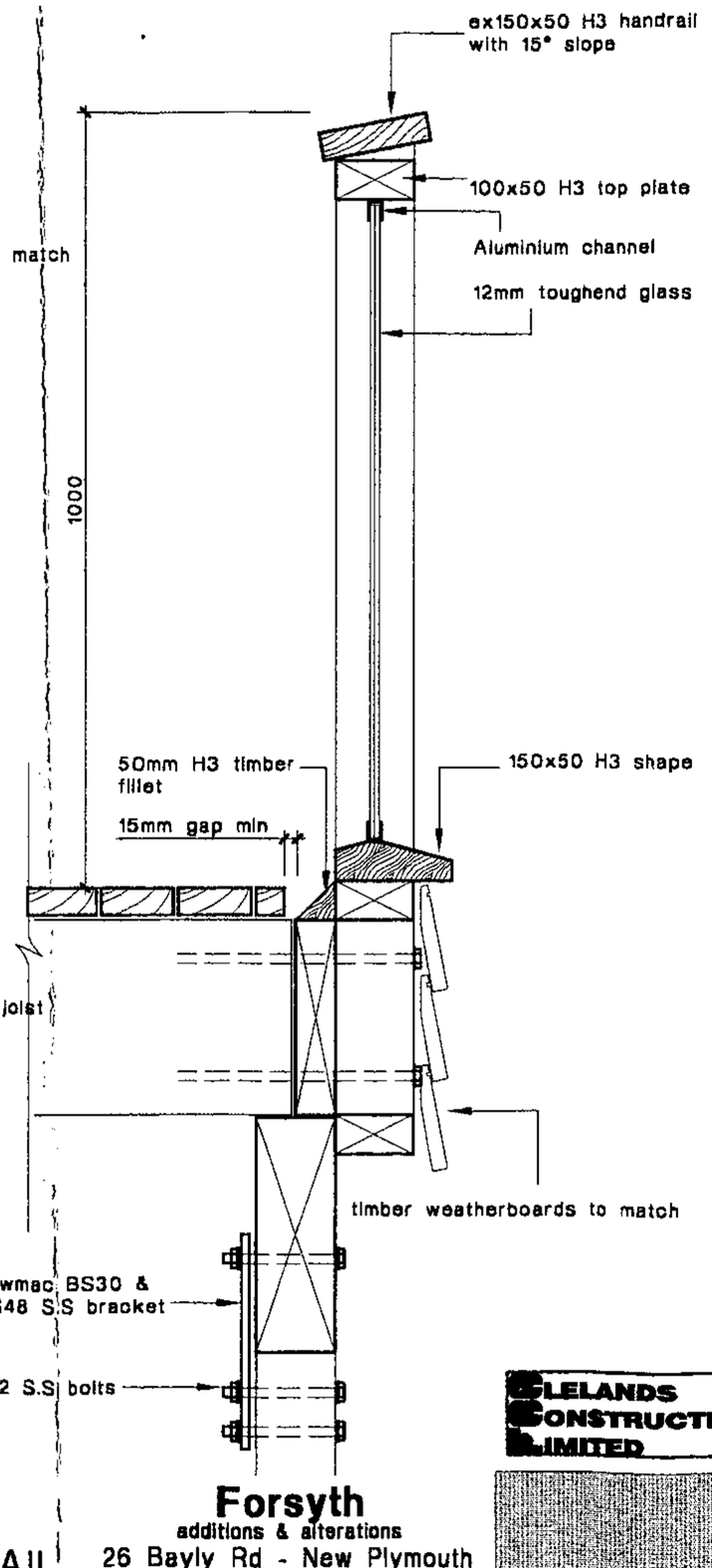

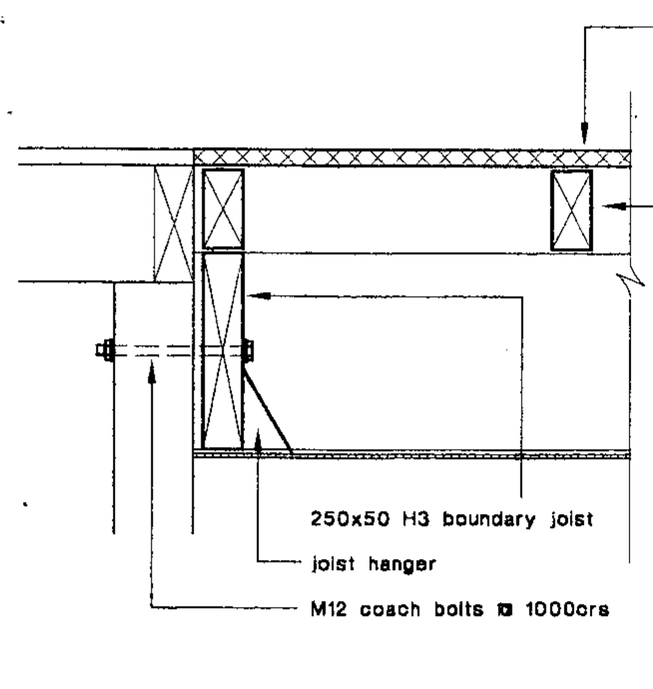

2 a3-01 DETAIL
SCALE = 1:10

4 a3-01 DETAIL
SCALE = 1:10

5 a3-01 DETAIL
SCALE = 1:10

1 a4-01 DETAIL
SCALE = 1:10

DO NOT SCALE DRAWINGS.
CONTRACTORS MUST VERIFY ALL DIMENSIONS ON SITE PRIOR TO COMMENCING ANY WORK

ELELANDS CONSTRUCTION LIMITED

Forsyth
additions & alterations
26 Bayly Rd - New Plymouth

details

DRAWING a5-01 DRAWN dh
ORIGINAL SIZE A3 JOB NO. 03-38
SCALE 1:10

APPROVED
26 NOV 2003

Document Set ID: 614735
Version: 1, Version Date: 09/08/2004

DO NOT SCALE DRAWINGS.
CONTRACTORS MUST VERIFY ALL DIMENSIONS ON SITE PRIOR TO COMMENCING ANY WORK

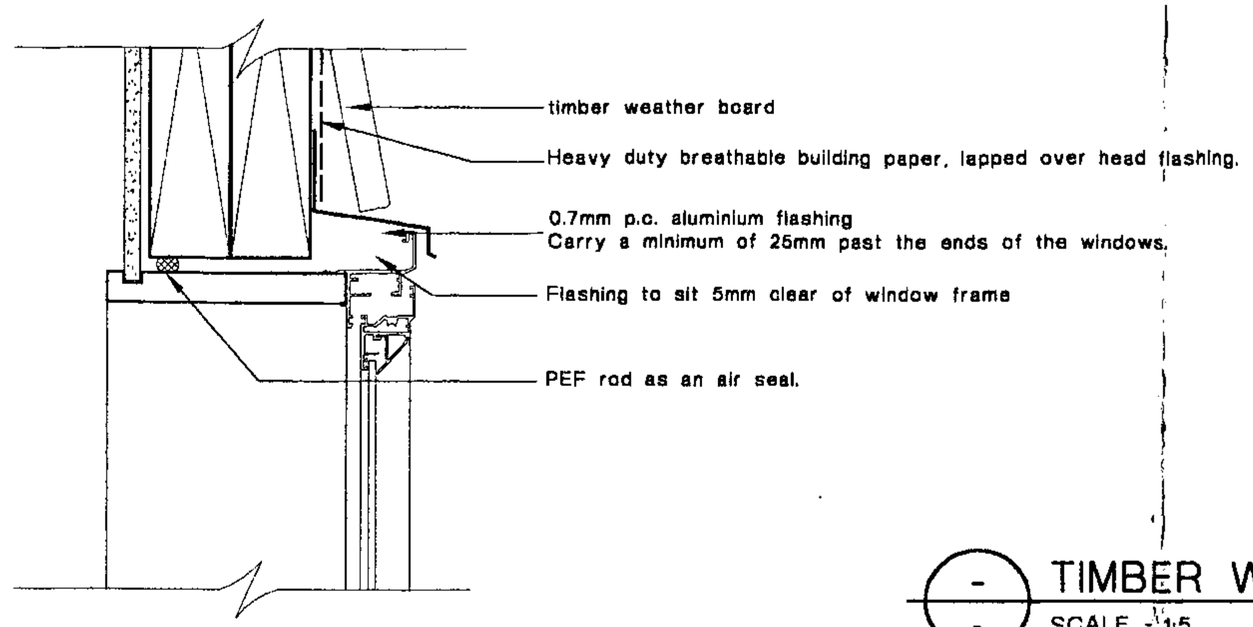

- / - TIMBER WEATHER BOARD HEAD DETAIL
SCALE = 1:5

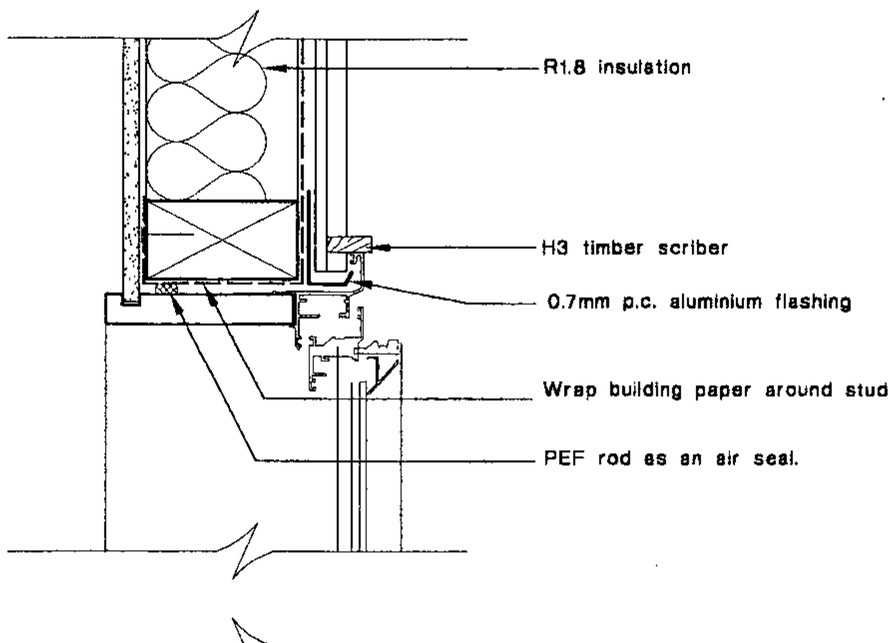

- / - TIMBER WEATHER BOARD JAMB DETAIL
SCALE = 1:5

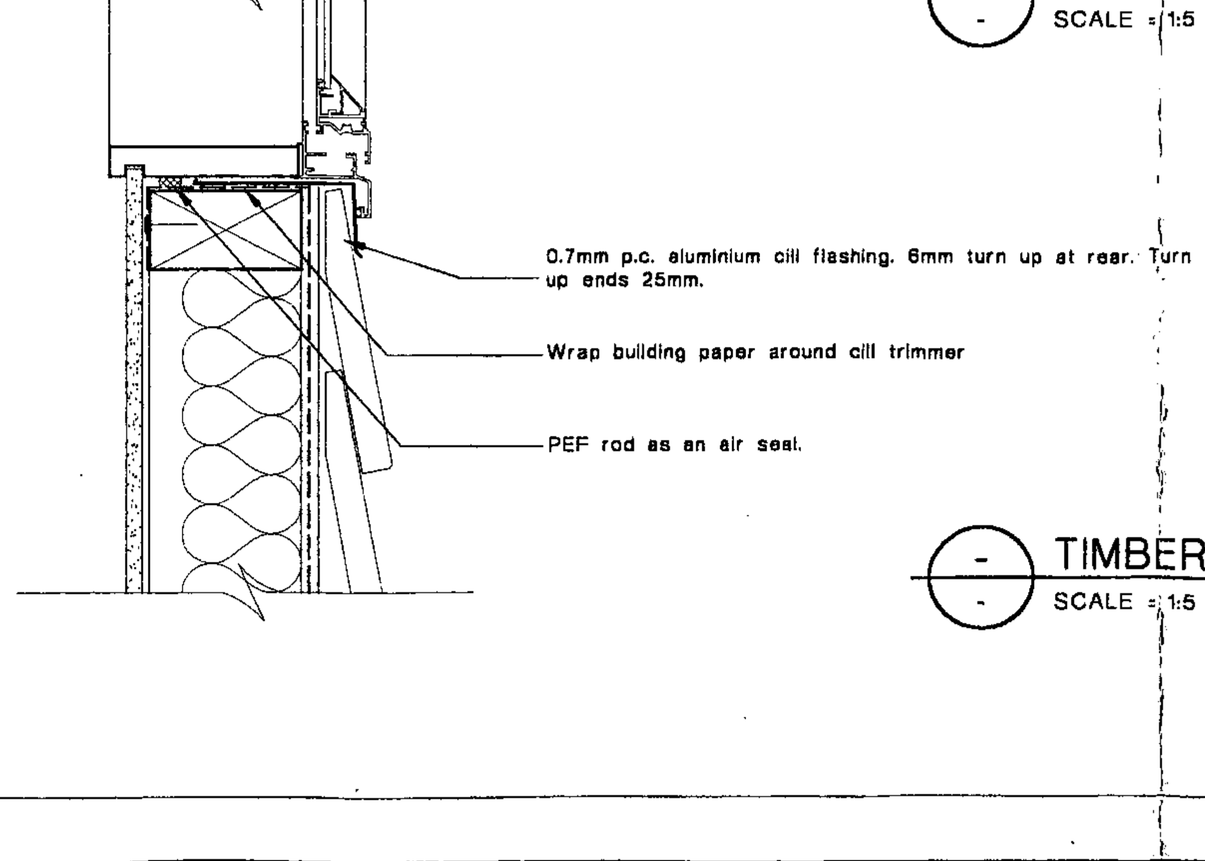

- / - TIMBER WEATHER BOARD CILL DETAIL
SCALE = 1:5

GLELANDS CONSTRUCTION LIMITED

Forsyth
additions & alterations
26 Bayly Rd - New Plymouth
window details

DRAWING a5-02 DRAWN dh
ORIGINAL SIZE A3 JOB NO. 03-38
SCALE 1:5

Approve
2003

Document Set ID: 614735
Version: 1, Version Date: 09/08/2004

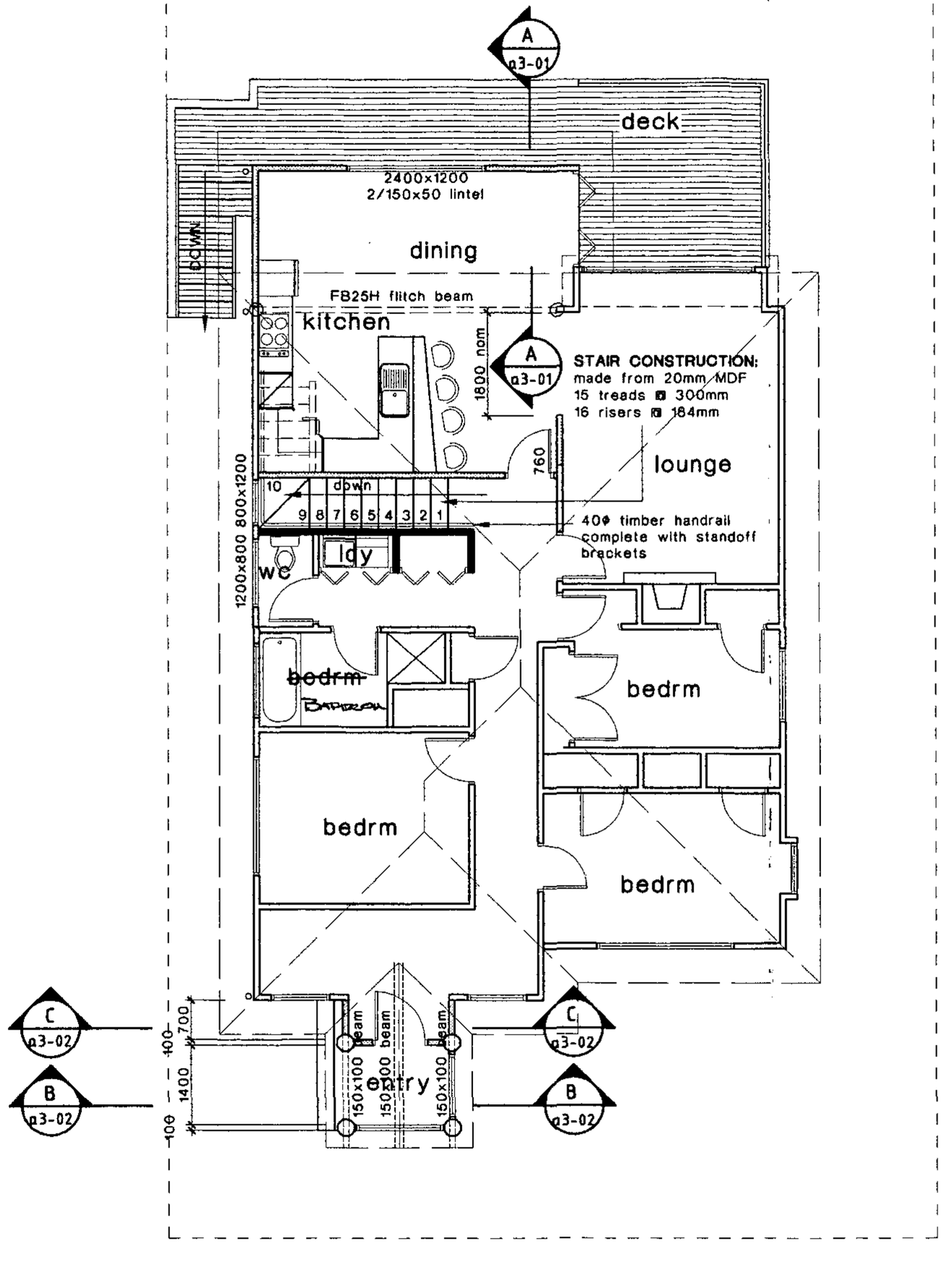

new plan

SCALE 1:100

DO NOT SCALE DRAWINGS.
CONTRACTORS MUST VERIFY ALL DIMENSIONS ON SITE PRIOR TO COMMENCING ANY WORK

NEW CONSTRUCTION KEY

NEW TIMBER FRAMED WALLS

EXISITNG TIMBER FRAMED WALLS

LxH
1200x800
NEW WINDOWS

760
NEW DOORS

DOUBLE STUD UNDER BEAM

SD SMOKE DETECTOR

NOTES

ALL CONSTRUCTION SHALL COMPLY WITH NZS 3604 UNLESS NOTED OTHERWISE

ALL CONCRETE CONSTRUCTION SHALL COMPLY WITH NZS 3109

CLELANDS CONSTRUCTION LIMITED

Forsyth
additions & alterations
26 Bayly Rd - New Plymouth

AS BUILT PLAN

DRAWING a2-02 DRAWN dh
ORIGINAL SIZE A3 JOB NO. 03-38
SCALE 1:100

10/08/2004 07:19:38 AM

Document Set ID: 614735
Version: 1, Version Date: 09/08/2004

DO NOT SCALE DRAWINGS.
CONTRACTORS MUST VERIFY ALL DIMENSIONS ON SITE PRIOR TO COMMENCING ANY WORK

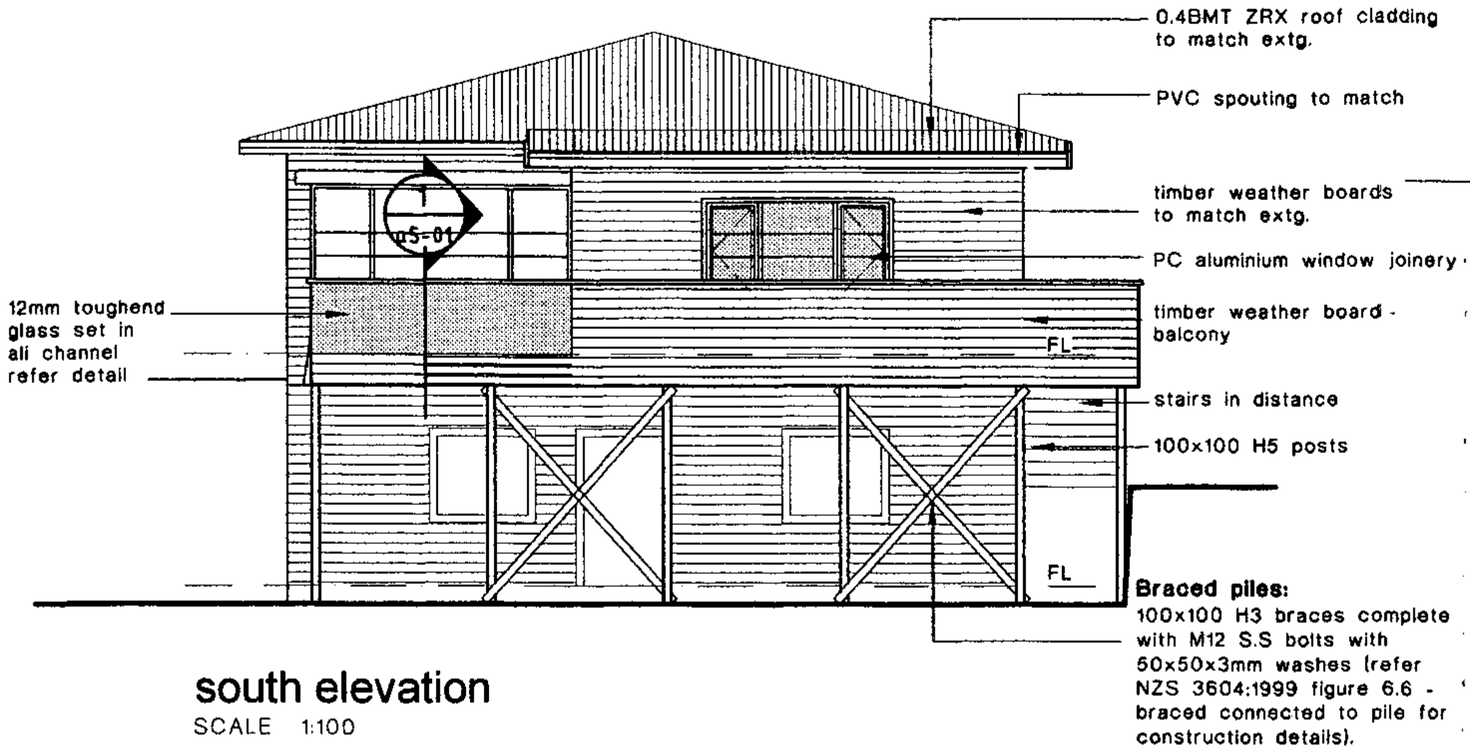

south elevation
SCALE 1:100

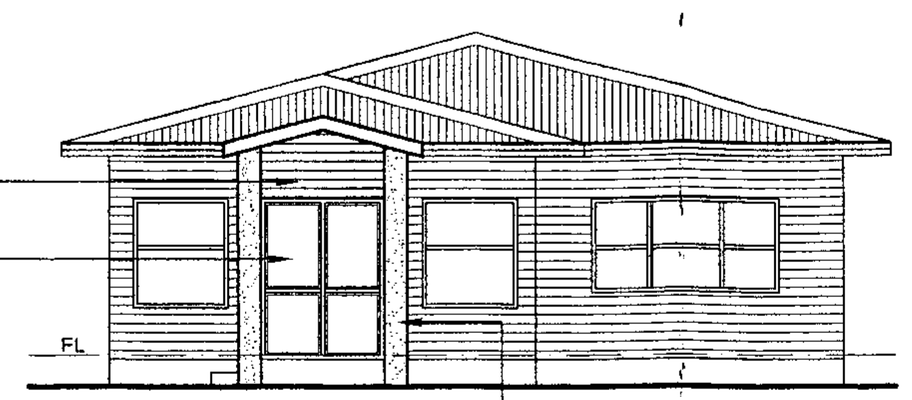

north elevation
SCALE 1:100

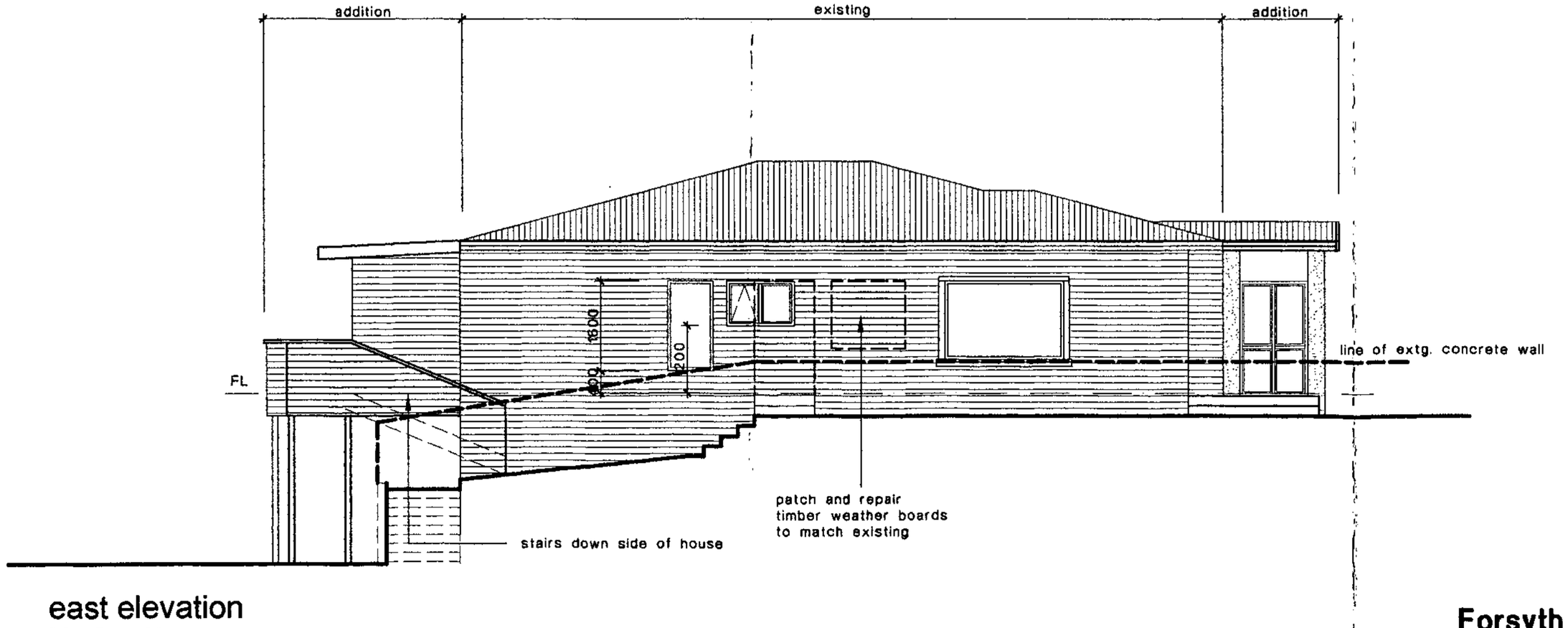

east elevation
SCALE 1:100

FLELANDS CONSTRUCTION LIMITED

Forsyth
additions & alterations
26 Bayly Rd - New Plymouth

elevations

DRAWING a4-01 DRAWN dh
ORIGINAL SIZE A3 JOB NO. 03-38
SCALE 1:100

10/08/2004 07:20:26 AM

Document Set ID: 614735
Version: 1, Version Date: 09/08/2004

No. 26 Sec. Lot 10, 4873 D.P.

BAYLY Street

DRAINAGE AND PLUMBING REGISTER

OWNER T. ALLEN

ADDRESS 26 BAYLY RD.

BUILDER SELF.

PLUMBER W. A. JAMES

DRAINLAYER M. HORO

PERMITS.

BUILDING No. 72552.

VALUE £1900

REC. No.

NATURE OF WORK NEW DWELLING

W.C.'s ..... BATHS ..... BASINS ..... SINKS ..... TUBS .....

PLAN SUBMITTED ...../...../.....

PLANS APPROVED ...../...../.....

PERMIT ISSUED ...../...../.....

DRAIN TESTED 19/5/52.

PLUMBING PASSED 8/6/53.

FALL NORMAL TO EXISTING DRAIN

J. F. Francis.

Inspector.

Document Set ID: 386013
Version: 1, Version Date: 17/07/2003

DRAINAGE PLAN SCALE

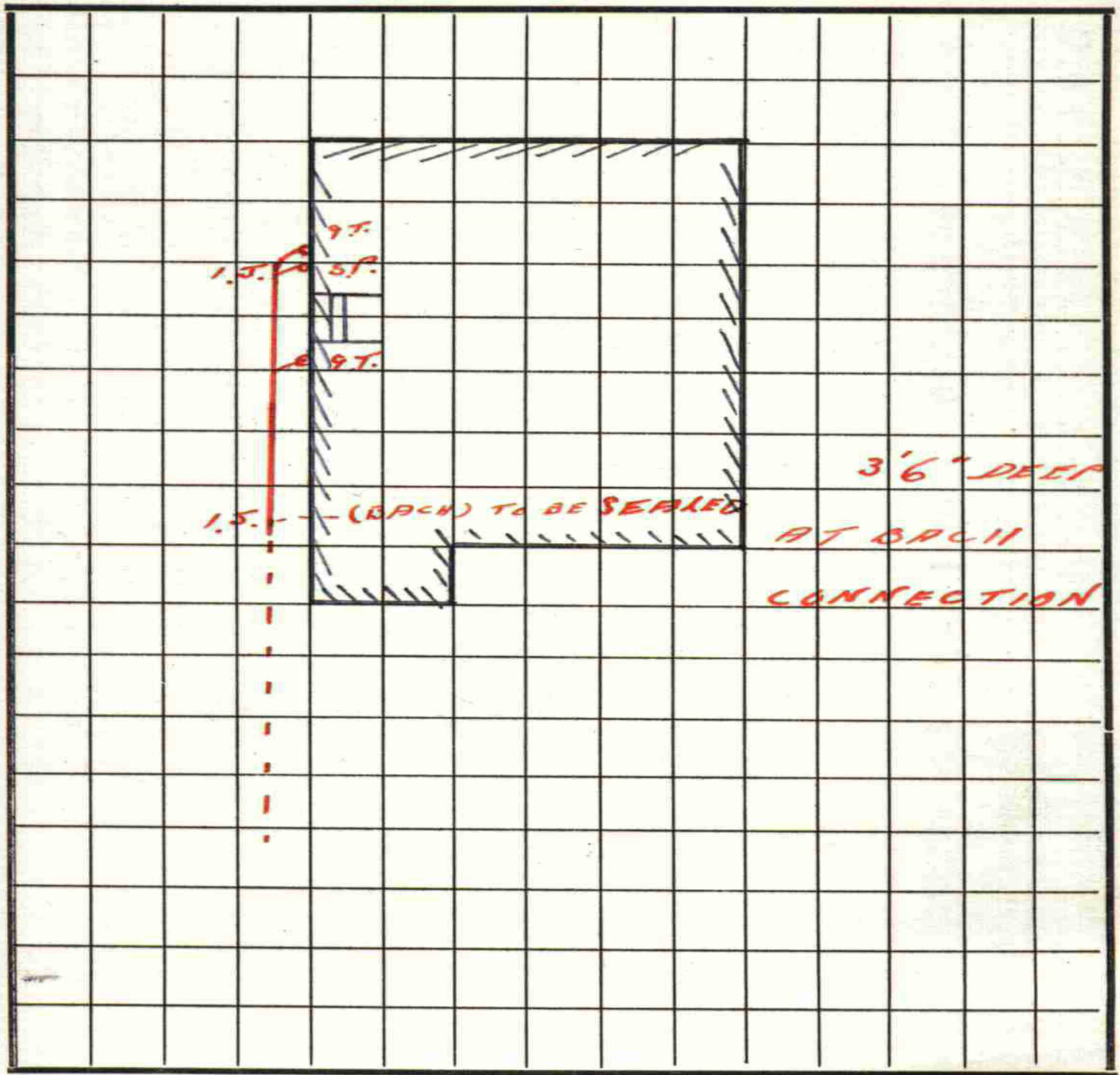

FRONTAGE 26 BAYLY RD.

AVERY, PRINT. N.P.—26959

Document Set ID: 386013
Version: 1, Version Date: 17/07/2003

NEW PLYMOUTH DISTRICT COUNCIL
newplymouthnz.com

CODE COMPLIANCE CERTIFICATE No:17926
Section 43(3), Building Act 1991

Building Consent No: 56238

OWNER : MR Leslie Ronald FORSYTH

Mailing Address: C/- CLELANDS CONSTRUCTION, P O BOX 3240 - A CLELAND, NEW P
Contact: CLELANDS CONSTRUCTION
Mailing Address: C/- CLELANDS CONSTRUCTION, P O BOX 3240 - A CLELAND, NEW P
Application received: 28/10/03

PROJECT LOCATION

Street Address: 26 BAYLY ROAD, NEW PLYMOUTH 4601
Property ID: 049262
Assessment No:
Legal: LOT 10 DP 4873

PROJECT

The project is for Additions
Intended Use(s): residential accommodation
Intended life: Indefinite but not less than 50 years

COUNCIL CHARGES

The Council's total charges payable on the uplifting of this code compliance certificate in accordance with the attached details are: $0.00

This is a final code compliance certificate issued in respect of all of the building work under the above building consent

1: Code Compliance Cert Comments

No Special Conditions

Authorised Officer Am .....

Date 19/08/04

Liardet Street, Private Bag 2025, New Plymouth 4620, New Zealand
Phone: 06 759 6060, Fax: 06 759 6072, Email: enquiries@npdc.govt.nz

Document Set ID: 614734
Version: 1, Version Date: 09/08/2004

POWERED BY

ownly

Licensed REAA 2008

move.

darrell paterson

OWNER & SALESPERSON

027 493 7134
darrell@bestmove.co.nz
bestmove.co.nz

riley blair

SALES ASSOCIATE TO DARRELL PATERSON

027 441 6308
riley@bestmove.co.nz
bestmove.co.nz