BC170827
Further Information Received
04/12/2017

Thermakraft™

WATERGATE PLUS 295



SYNTHETIC WALL UNDERLAY

The ultimate wrap, all walls, all systems

Watergate Plus 295 is a fire retardant, absorbent, breathable wall underlay. It is a white composite Non-woven polypropylene, specifically designed as a wall underlay behind exterior wall cladding. Watergate Plus 295 also offers a high degree of water resistance, with a high level of water vapour permeability.

ADVANTAGES

- Can be used as a wall underlay on timber and steel framed buildings with absorbent and non-absorbent wall cladding direct fixed to framing.
- Can be used as a wall underlay on timber and steel framed buildings with absorbent and non-absorbent wall cladding installed over an 18mm minimum drained cavity.
- Is suitable for use in all Wind Zones of NZS 3604 up to, and including, "Very High", when used as standalone flexible underlay, and Extra High when used as a flexible underlay over a rigid wall underlay.
- Will provide temporary weather protection during construction. (Max 60 Days).
- Can be used as a non-rigid backing material for Stucco Plaster.*
- May be used as a slip layer over rigid backing for Stucco Plaster.*
- Is fire retardant.*
- Unaffected by LOSP treated timber.
- Is suitable as an air barrier in unlined walls.

ENVIRONMENTALLY FRIENDLY PRODUCT

FIRE

WALL

* Refer technical specifications

BRANZ Appraised
Appraisal No.695 [2017]

For additional details and latest specifications www.thermakraft.co.nz or scan QR code.

BC170827
Further Information Received
04/12/2017

Thermakraft Watergate Plus 295 – Technical Specification

Fire Retardant | Breathable | Absorbent | Non Woven | Wall Underlay

Thermakraft Watergate Plus 295 can be used as a wall underlay on timber and steel framed buildings within the following scope:

- The scope limitations of NZBC Acceptable Solution E2/AS1, Paragraph 1.1, with regards to building height and floor plan area; and,
- With absorbent wall claddings directly fixed to timber and steel framing; and,
- With non-absorbent wall claddings directly fixed to timber and steel framing; and,
- With absorbent and non-absorbent wall claddings installed over an 18mm minimum drained cavity;
- With masonry veneer in accordance with NZS 3604, NZBC Acceptable Solution E2/AS1 for timber framed buildings, or specific engineering design for steel framed buildings; and,
- Situated in NZS3604 Building Wind Zones up to, and including 'Very High' when used as a standalone flexible underlay, and "Extra High" when used as a flexible underlay over a rigid wall underlay.
- Can be used as a non-rigid backing material for Stucco Plaster in accordance with the requirements of NZBC Acceptable Solution E2/AS1 Paragraph 9.3.5.1. The Underlay must be supported with 75mm galvanized mesh, or Thermakraft Stud Strap at 150mm centres run across cavity battens to limit deflection to a maximum of 5mm.
- May also be used as a slip layer over rigid backing for Stucco Plaster in accordance with the requirements of NZBC E2/AS1 Paragraph 9.3.3(b).
- Refer BRANZ Appraisal No 695 (2010) for full details.
- May be used with LOSP treated timber.
- Is suitable as an air barrier in unlined wall spaces.
- Is suitable to be used in conjunction with thermal breaks on steel framed buildings.
- Is suitable for direct fixing behind metal cladding.

Flammability Index

Thermakraft Watergate Plus 295 Wall Underlay has an AS 1530 Part 2 Flammability Index of not greater than 5 and therefore meets the requirements of NZBC Acceptable Solutions C/AS2 to C/AS6, Paragraph 4.17.8 b), for the surface finish requirements of suspended flexible fabric used as an underlay to exterior cladding that is exposed to view in occupied spaces. It may therefore be used with no restrictions in all buildings.

Limitations

- Must not be used as a roof underlay.

Durability

Meets the Performance Requirements of NZBC Clauses B2, Durability (B2.3.1 (a) 50 years, B2.3.1 (b) 15 years and B2.3.2), E2 External Moisture (E2.3.2), and F2 Hazardous Building Materials F2.3.1, providing

- It is not damaged.
- Installed in accordance with instruction guide.
- Is not left exposed for more than 60 days.
- Installed by or under guidance of Licensed Building Practitioners.
- Is compatible with cladding system used.

Table 1: NZBC E2/AS1 wall underlay requirements

NZBC E2/AS1 TABLE 23 (NZS2295) WALL UNDERLAY PROPERTIES	PROPERTY PERFORMANCE REQUIREMENTS	PROPERTY PERFORMANCE
Absorbency	≥ 100gsm	Pass
Vapour Resistance	≤ 7 MN.s/g	Pass
pH of Extract	≥ 5.5 and ≤ 8	Pass
Shrinkage	≤ 0.5%	Pass
Water Resistance	≥ 20mm	Pass
Air Resistance	≥ 0.1 MN.s/m³	295 can be used as an air barrier

Roll Dimensions

WIDTH (MM)	LENGTH (M)	M²
1370	18.5	25
1370	37.0	50
1370	73.0	100
2740	18.5	50
2740	36.5	100

*M² is the roll size for actual coverage, allow for laps and joins.

BRANZ Appraised
Appraisal No.695 [2017]

For additional details and latest specifications www.thermakraft.co.nz

Thermakraft™

Thermakraft Ltd 11 Turin Place, East Tamaki, Auckland, New Zealand
P.O.Box 58-112, Botany, Auckland 2163 **Phone** 0800 806 595 or +64 9 273 3727
Fax +64 9 273 3726 **Email** info@thermakraft.co.nz **www.thermakraft.co.nz**

INTELLIGENT MEMBRANES FOR THE BUILDING INDUSTRY

The recommendations contained in Thermakraft's literature are based on good building practice, but are not an exhaustive statement of all relevant information and are subject to any conditions contained in the Warranty. All product dimensions and performance claims are subject to any variation caused by normal manufacturing process and tolerances. Furthermore, as the successful performance of the relevant system depends on numerous factors outside the control of Thermakraft (for example quality of workmanship and design), Thermakraft shall not be liable for the recommendations in that literature and the performance of the Product, including its suitability for any purpose or ability to satisfy the relevant provisions of the Building Code, regulations and standards. Literature subject to change without notification. Latest documentation can be found on the website.

E.&O.E.

BC170827
Further Information Received
04/12/2017

ecoply
Proven. Durable. Strong

ECOPLY® STRUCTURAL RIGID AIR BARRIER

BARRIER

SPECIFICATION & INSTALLATION GUIDE

JULY 2017

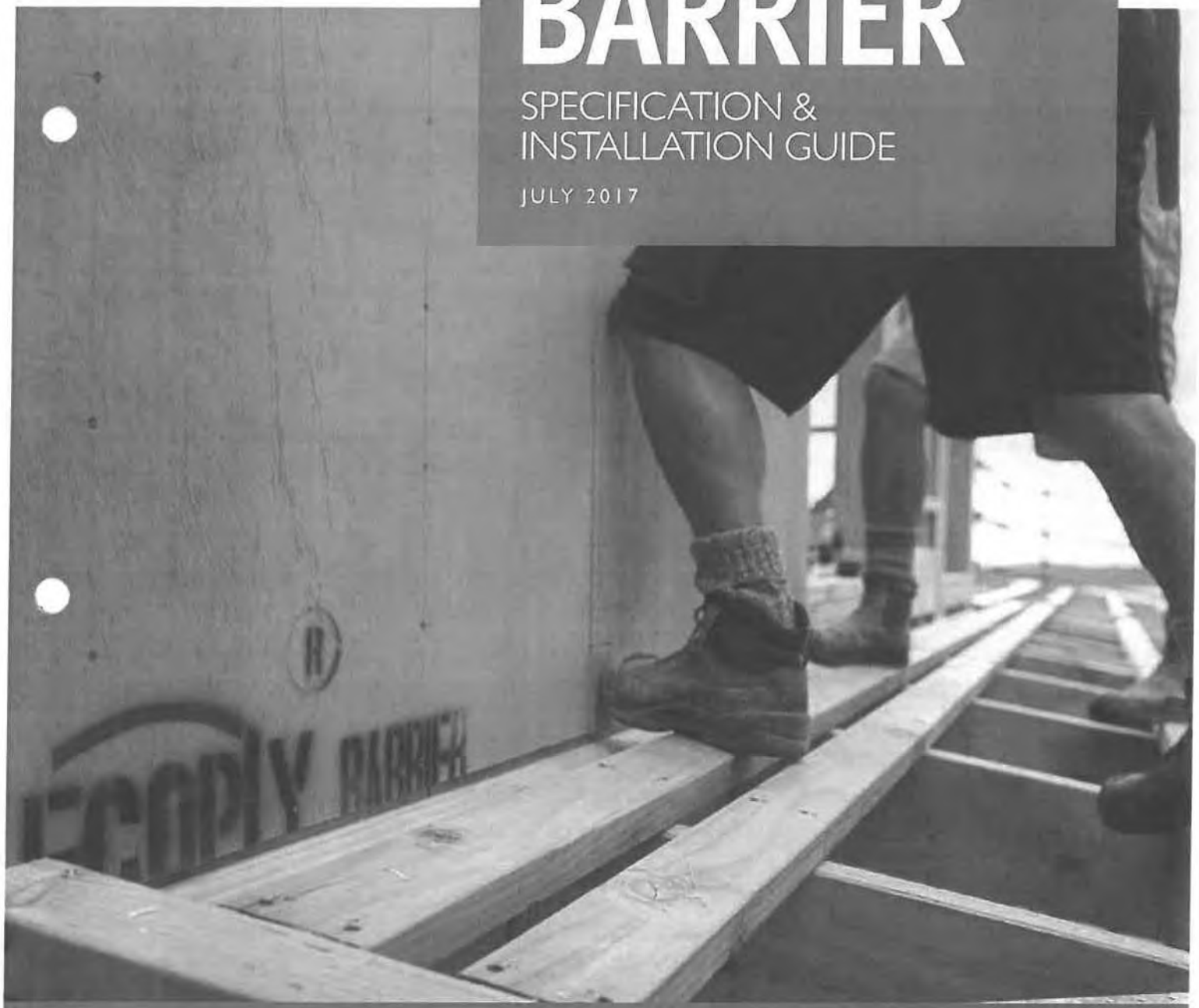

CarterHoltHarvey
Woodproducts New Zealand

Information contained within is specific to Ecoply® Barrier structural plywood products and must not be used with any other plywood products, no matter how similar they may appear.

BC170827
Further Information Received
04/12/2017

ecoply

BARRIER

Contents

1.0 Ecoply® Barrier 3
2.0 Ecoply Brand 4
3.0 Technical Information & CAD Details 4
4.0 Ecoply Barrier Advantages 4
4.1 Architects/Designers 4
4.2 Builders 5
4.3 Homeowners 5
5.0 Ecoply Barrier Components 6
5.1 Tapes 6
5.2 Coating - Panels 6
6.0 Design Considerations 7
7.0 Installation 8
7.1 Installation 8
7.2 Installation - Sheet Joins 11
7.3 Installation - Sill Tape 15
7.4 Installation – Frame Sealing Tape 16
7.5 Service Penetrations 17
7.6 Structural Bracing 18
7.7 Ecoply Barrier Bracing Specification - EPB1 19
7.8 Ecoply Barrier Bracing Specification - EP2 20
7.9 Ecoply Barrier Bracing Specification - EPBS 21
7.10 Ecoply Barrier Bracing Specification - EPBG 22
7.11 GIB HandiBrac® - Recommended Installation Method 23
7.12 Top Plate Hold-Down Connections 24
7.13 Bracing Lengths 25
7.14 Lintel Tie Down Connection 27
7.15 Installation - Apron & Saddle Flashings 28
8.0 Fire Rated Systems 30
9.0 Cladding System Installation 30
10.0 Working Instructions 31
11.0 Referenced Documents 31
12.0 Frequently Asked Questions 32
13.0 Limitations 32
14.0 Ecoply Barrier Installation Checklist 33
14.1 Rigid Air Barrier Checklist 33

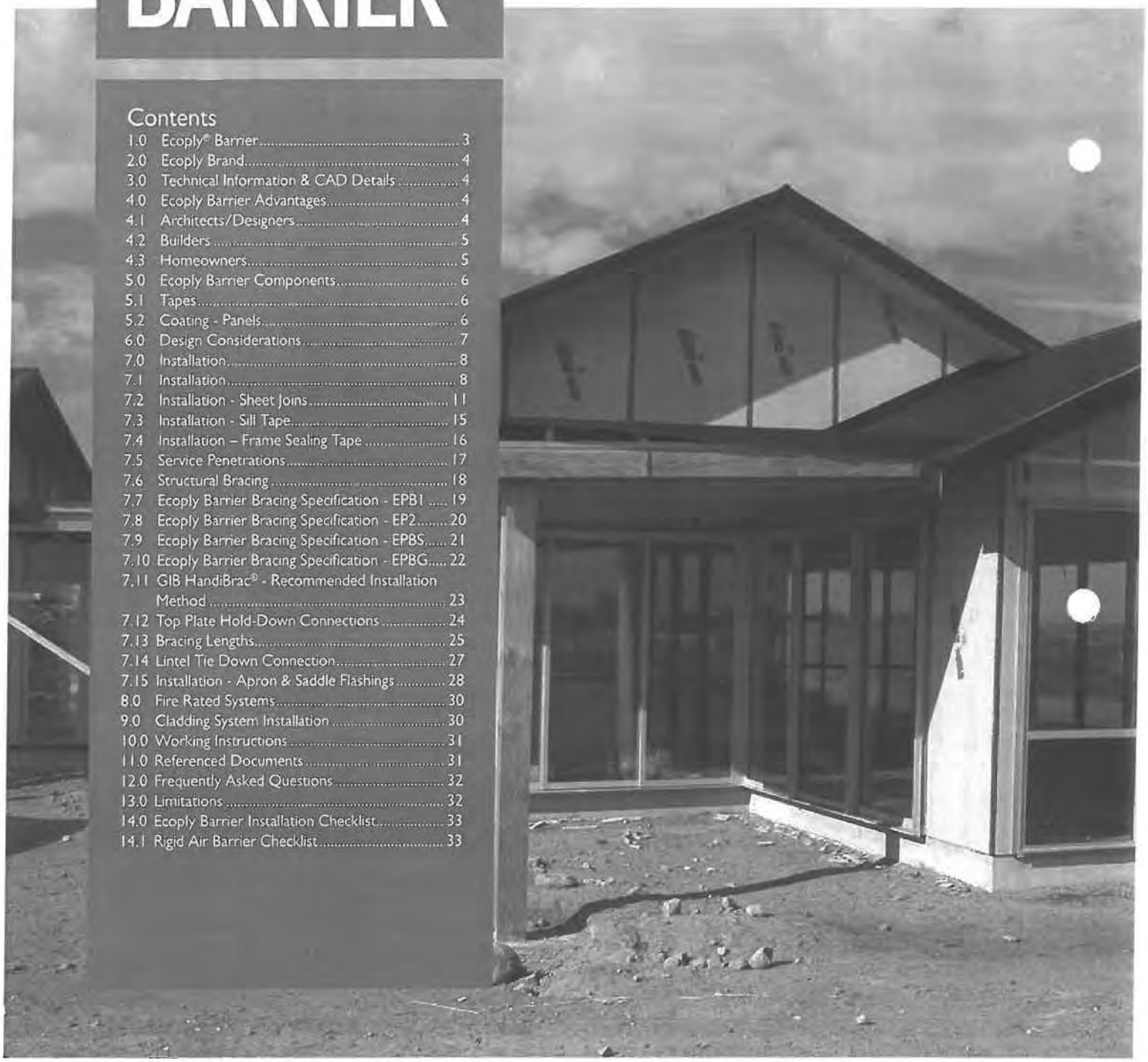

CarterHoltHarvey
Woodproducts New Zealand

BC170827
Further Information Received
04/12/2017



1.0 ECOPLY® BARRIER

Ecoply® Barrier provides a weathertight rigid air barrier system for drained and vented cavity systems outside the building frame, effectively replacing traditional building wrap in the cavity while providing structural bracing, and forming a strong secondary line of defence against moisture penetration into the building envelope.

Ecoply Barrier is suitable for use in both residential and commercial buildings and consists of a 7mm thick H3.2 CCA (Copper Chrome Arsenate) water borne treated structural plywood panel which is coated on the face and edges using a polyester powder coating process for increased sheet durability and protection from moisture penetration.

Ecoply Barrier meets the New Zealand Building Code (NZBC) requirements for rigid underlays as outlined in section 9.1.4, the performance requirements of Table 23 of NZBC Clause E2 External Moisture, Acceptable Solution (E2/AS1), and has been tested for wind speeds exceeding Extra High wind zone as defined in Standards New Zealand 3604 Timber Framed Buildings (NZS 3604). Testing has been completed to provide solutions for buildings outside the scope of NZS 3604. For details on this, please contact CHH Woodproducts for further information.

Ecoply Barrier is BRANZ appraised for use as a rigid sheathing and temporary weather-protecting sheathing on timber framed buildings.

Ecoply Barrier must be competently installed in accordance with good building practices and sound design principles to satisfy the requirements of the Building Act 2004, the New Zealand Building Code (NZBC), and applicable New Zealand Standards. This is the responsibility of building owners and the design professionals and builders that they engage.

This document contains information, limitations, and cautions regarding the properties, handling, installation, usage, and the maintenance of Ecoply Barrier. However, to the maximum extent permitted by law, Carter Holt Harvey Woodproducts New Zealand (CHH Woodproducts) assumes no legal liability to you in relation to such information.

Ecoply Barrier panels are engineered to allow the wall system to breathe and dry out, while also preventing the intrusion of exterior moisture. Once the full system has been installed, the system provides a lasting protective barrier.

What is a Rigid Air Barrier?

A rigid air barrier is a barrier against air pressure and water infiltration from the outside to the interior of the building. A rigid air barrier acts as a secondary line of defence against water penetrating into the wall system – the primary defence being the exterior wall cladding.

Definition of an Air Barrier:

- Impermeable to airflow — the system must be continuous (no holes, openings or penetrations) and resistant to air pressure differentials.
- Continuous over the entire building enclosure.
- Able to withstand the forces that may act on them during and after construction.

Ecoply Barrier is a full sheathing system developed to prevent unwanted air movement and replace traditional building wrap.

BRANZ Appraised
Appraisal No.827 [2014]

The information contained in this document is current as at July 2017. It is your responsibility to ensure you have the most up to date information available. The information contained in this publication relates specifically to Ecoply® Barrier manufactured by Carter Holt Harvey Woodproducts New Zealand and must not be used with any other plywood manufacturer's products no matter how similar they may appear. Alternative plywood products can differ in a number of ways which may not be immediately obvious and substituting them for Ecoply Barrier structural plywood products or Ecoply Barrier Tapes is not appropriate, and could in extreme cases lead to premature failure and/or buildings which do not meet the requirements of the New Zealand Building Code (NZBC).

BC170827
Further Information Received
04/12/2017

2.0 ECOPLY® BRAND

Ecoply® Barrier panels are manufactured in New Zealand by CHH Woodproducts under a third party audited quality control programme to monitor compliance with AS/NZS 2269 – Plywood Structural.

3.0 TECHNICAL INFORMATION & CAD DETAILS

Technical data sheets and CAD drawings referenced in this guide are available for download from www.chhwoodproducts.co.nz.

Ecoply Barrier (Rigid Air Barrier) is compliant with NZBC Clause B2.3.1 (a), for not less than 50 years, when used where the cladding durability requirement or serviceable life is not less than 50 years, e.g. structural bracing, and compliant with NZBC Clause B2.3.1 (b), for 15 years where the cladding durability requirement is 15 years when used as a temporary sheathing.

When specifying or installing Ecoply Barrier visit www.chhwoodproducts.co.nz or call 0800 326 759 to ensure you have current specification material and any relevant technical notes.

4.0 ECOPLY® BARRIER ADVANTAGES

4.1 ARCHITECTS / DESIGNERS

Modern construction practices are moving toward providing greater energy efficiency and an airtight building envelope. These principles of high performance building are common in nearly all current green building standards and construction codes. Proper sealing between wall assembly components prevents unwanted air movement in and out of conditioned air spaces.



Advantages:

- Ecoply Barrier can form an integral part of a weathertight system including two of the four 'Ds' of weathertightness; drying and drainage.
- A rigid air barrier provides a more robust cavity and prevents the insulation bulging, which would increase the chance of moisture bridging from the cladding to the framing line.
- Provides both structural support and protection from moisture. Structural bracing is achieved when installed in accordance with the Ecoply Barrier bracing specifications. Bracing benefits may result in cost savings by reducing internal lining bracing elements (Refer to section 7.6 on bracing).
- BRANZ appraised system, fully tested and code compliant rigid air barrier system.
- Manufactured from sustainable plantation pine and available FSC certified (SCS-COC-001316) upon request.
- Low formaldehyde emission level (E0).

BRANZ Appraised
Appraisal No.827 [2014]

BC170827
Further Information Received
04/12/2017

4.2 BUILDERS

Ecoply® Barrier lets you say goodbye to flexible wall underlays forever. Builders no longer have to worry about installing traditional housewrap or building paper on a windy day or having to return for re-work due to rips, tears or wrap that has blown off the home. Ecoply Barrier can typically save up to 2-4* weeks off the total house build time*, by allowing a faster building close in, for an earlier interior start and a quicker overall build time.

Ecoply Barrier installs quickly with two easy steps – fasten the panels and tape the seams. Once completed, the system provides moisture protection both during and after construction.



Advantages:

- Immediate close-in of structure, allowing interior and exterior work to be completed in parallel.
- Reduced builder liability; strong secondary line of defence and solid material for sealing penetrations.
- Schedule your subcontractors sooner.
- No call backs for rips, tears or wrap that has blown off.
- Easy to work light material, simple and easy to install.
- Up to 180 day exposure during construction cycle. No hold-ups while the cladding has to be installed i.e, brick layers etc.

4.3 HOMEOWNERS

An airtight building envelope means less airflow into and out of the home. Since conditioned air is expensive air, homeowners can take comfort in knowing that Ecoply Barrier will provide a strong secondary line of defence against the elements.



Advantages:

- Get possession faster, builders building with Ecoply Barrier can typically reduce up to 2-4* weeks off a typical house build*.
- Structurally rigid home.

* Timeframes and efficiencies are indicative only. Construction production gains will differ with respect to individual builder's abilities and other contributing circumstances outside the control of CHH Woodproducts.

BC170827
Further Information Received
04/12/2017

5.0 ECOPLY® BARRIER COMPONENTS

Table 1: Product Range

Description	Weight (kg/m²)	Thickness	Width	Length
Ecoply® Barrier – structural plywood with factory applied proprietary coating to sheet surface and edges	Approx 4.0	7mm	1197mm	2440mm 2745mm
Sill Tape – one piece stretchable sill tape for window and door sills	-	2 Rolls per Box	150mm, 200mm	20m per roll
Frame Sealing Tape – for a permanent seal of all Ecoply® Barrier openings (Use in conjunction with Sill Tape)	-	2 Rolls per Box 1 Roll per Box	150mm 200mm	30m per roll
Sealing Tape – for a permanent seal of all Ecoply Barrier vertical joints	-	10 Rolls per Box	60mm	30m per roll

COMPONENTS NOT SUPPLIED BY CHH WOODPRODUCTS:

- PVC Horizontal Flashing: use Ecoply® Horizontal Jointer (Product Code RDZF7) supplied by E2 Flashing Solutions.
- Bracing Hold-Down Connectors: GIB HandiBrac® hold-down brackets manufactured by MiTek® complete with mechanical fastener with a minimum 15kN uplift capacity for concrete floors and 150mm x 12mm galvanised coach screw for timber floors.
- Fasteners.

5.1 TAPES

The Ecoply Barrier – Sill Tape, Frame Sealing Tape and Sealing Tape transform our sheathing plywood panels into a seamless protective barrier for your construction project. All tapes are proven to deliver an airtight and watertight seal. The Ecoply Barrier 'rigid air barrier system' tapes save you time and money on the job; and you can leave the site with confidence it will perform.



Table 2: Tapes

Technical Data	Sealing Tape	Sill Tape	Frame Sealing Tape
Description	For a permanent seal of Ecoply Barrier vertical joints	One piece stretchable sill tape, for use on all window / door frame sills	For a permanent seal of all Ecoply Barrier openings (Except window / door frame sill)
Carrier Paper	Special fleece made from PP	Butyl rubber with PE film	Special fleece made from PP
Width / Length	60mm x 30m	150mm x 20m 200mm x 20m	150mm x 30m (box of 2) 200mm x 30m (box of 1)
Release Paper	Siliconized Paper	Siliconized Foil (Split 90mm / 60mm) (Split 140mm / 60mm)	Siliconized Paper (Split 90mm / 60mm) (Split 140mm / 60mm)
Temperature Resistance	Long Term -40°C to +90°C	Long Term -40°C to +90°C	Long Term -40°C to +90°C
Processing Temperature	From -10°C	From -10°C	From -10°C
Colour	Grey	Black	Grey

Storage: All sealing tapes must be stored in clean dry conditions and not in an area with direct sunlight.

5.2 COATING - PANELS

The film formulation provides resistance to the effects of exposure to weathering including sun and moisture, typically experienced during the construction and normal service life of cavity substrate systems. The factory applied powder coat film is specifically formulated for use on Ecoply Barrier plywood panels.

- The film, formed by the powder coating process, helps resist moisture penetration.
- The edges of Ecoply Barrier sheets are coated and sealed.
- High film build (60–80 microns), delivers a smoother and more durable sheet surface allowing easier moisture drainage in cavity construction applications.
- Sealer coating contains low Volatile Organic Compounds (VOC).
- The beige coloured sealer coating can be exposed to the external environment for up to 180 days prior to cladding installation.

BC170827
Further Information Received
04/12/2017

7.0 INSTALLATION

7.1 INSTALLATION

Step 1 Framing:

Install the Ecoply® Barrier sheathing panels positioned with the water resistant powder coat film facing outwards. The panels must be installed with the long side of each panel orientated vertically to the framing members.

All Ecoply Barrier sheet edges must be fully supported by being fastened to framing:

- Studs must not exceed 600mm centres.
- Nogs must be provided at 1350mm centres maximum.
- The minimum framing width for fixing Ecoply Barrier is 45mm at sheet joints.
- Framing must be kept as dry as possible at all times.
- Do NOT glue to frame.

All timber framing sizes and set outs must comply with NZS 3604 (or be specifically designed to NZS 3603:1993 – Timber Structures Standard), with stud and nog centres and timber widths required by this specification. Use kiln dried framing such as Laserframe® in accordance with timber framing manufacturers specification and treated in accordance with NZBC Clause B2 Durability, Acceptable Solution (E2/AS1) or Standards New Zealand 3602:2003 Timber and Wood based products for use in building (NZS 3602).

Step 2 Fastener Durability:

Fasten the panels to the framing members. It is of particular importance in coastal areas, areas subject to salt spray and other corrosive environments that the correct fastener is verified prior to installation.

Fasteners shall be a minimum of hot dip galvanised for all B and C zones excluding sea spray zone D where stainless steel fasteners are required. Where stainless steel is required, annular grooved nails must be used.

Step 3 Fasteners:

Fastener heads should be flush with the panel surface. It is not required to tape over over-driven fasteners unless the fastener head completely penetrates the thickness of the face veneer.

Cladding fasteners must be increased in length by a minimum of 7mm to achieve the required fastener pull out loadings. (Ecoply Barrier is 7mm thicker than building wrap).

Table 3: Fastener Type

Fixing Type	Minimum Nail Length
Hand Driven	50 x 2.8mm nails (flat head or round head), hot dipped galvanised or better
Power Driven – Paslode Pneumatic Cladding Coil Nailer	Paslode Impulse 50 x 2.8mm hot dipped galvanised or better, ring round head drive B20557

NOTE: Please refer to Step 2 Fastener Durability.

Step 4 Sheet Layout:

When using Ecoply Barrier, flexible wall underlay is not required. Ecoply Barrier has been BRANZ appraised and tested to demonstrate product performance against the requirements of Table 23 of Clause E2 / AS1 of NZBC. The sheets are jointed keeping an expansion gap of 2-3mm maximum between the plywood panels. Each plywood panel is 1197mm in width to allow for standard 400mm or 600mm stud spacing.

- All sheet edges must be supported by the framing.
- Use fastener pattern unless otherwise specified (refer to the bracing specifications in the Ecoply Specification and Installation Guide).
  - 150mm centres at sheet edges
  - 300mm centres within sheet body up to and including 'Very High' wind zone or;
  - 150mm centres within sheet body in 'Extra High' wind zone
- Sheets must overhang the bottom plate by a minimum of 25mm over timber and concrete foundations (Refer to BAR005: Overhang Clearances For Concrete Slab or Masonry) with a maximum overhang of 40mm.
- For brick cladding rebates, in addition to the 25 – 40mm sheet overhang, 40mm clearance must exist between the face of the Ecoply Barrier sheet and the brick cladding in accordance with E2/AS1 Section 9.2.6 Cavities (Refer to BAR005A: Brick Rebate Overhang Clearance).
- For cantilevered floor joists, sheets must overhang a minimum of 25mm, with claddings to extend a minimum of 50mm below the lowest part of the timber framing in accordance with E2/AS1 Table 18 (Refer BAR005B: Timber Floor Overhang Clearance For Cantilevered Joists).
- For timber sub-floor systems, sheets must overhang the bearer a minimum of 25mm, with claddings to extend a minimum of 50mm below the lowest part of the timber framing in accordance with E2/AS1 Table 18 (Refer BAR005C: Overhang Clearance for Timber Sub-Floors).

Ground Clearances:

Minimum ground clearances must be maintained for the cladding being installed in accordance with Clause E2/AS1 – Figure 65 and Table 18, and with NZS 3604 for timber floors. The adjacent ground must slope away from the building in accordance with NZBC requirements. Ecoply Barrier must not be installed where product will remain in contact with non-draining water, damp, or soil.

BC170827
Further Information Received
04/12/2017

6.0 DESIGN CONSIDERATIONS

Responsibility

Design responsibility lies with the building owner and the professionals that they engage. The Specifier for the project must ensure that the products and details in the specification are appropriate for the intended application and that additional detailing is provided for specific design or any areas that fall outside the scope and specifications of this literature.

Preservative Treatment

Ecoply® Barrier is treated in accordance with AS/NZS 1604.3 with H3.2 CCA (Copper Chrome Arsenate) water borne treatment. H3.2 CCA treated plywood in accordance with AS/NZS 1604.3 is described as suitable for: "outside above ground applications" and periodic moderate wetting.

Cut Sheets

Ecoply Barrier is envelope preservative treated. If a sheet end is cut, place the cut end to the top. Always have a sealed sheet end at the bottom to minimise potential moisture ingress into the panel. All other cuts and penetrations must be covered by Ecoply Barrier Sealing Tape and installed in accordance with the Ecoply Barrier literature. When installed as per the above requirements, cut edges and penetrations are not required to be retreated with a brush on preservative treatment however, if desired, CHH Woodproducts recommends the use of Holdfast® Metalex® Concentrated Timber Preservative Green (Holdfast® Metalex® Green).

Dimensional Sheet Change

Detailing and construction using Ecoply Barrier must allow for natural movement in line with normal cycles of moisture change occurring in the environment. The total expansion both along and across a 2440 x 1197mm panel can be in the order of 1.5mm to 3mm depending on the environment. Detailing and construction practice should take the potential for natural movement into consideration. Ecoply Barrier sheets may exhibit slight sheet bowing across the sheet resulting from the preservative treatment and surface coating processes. This is to be expected and will not affect the product's structural performance or weathertightness when installed as per the specifications.

Formaldehyde

Formaldehyde occurs naturally in the environment and is emitted by processes such as combustion, decay and naturally by all timber species. Ecoply Barrier meets the lowest formaldehyde emission classification (E0 – less than 0.5mg/ litre).

Wind Loadings

Ecoply Barrier meets the NZBC requirements for rigid underlays as outlined in section 9.1.4, the performance requirements of Table 23 of E2/ AS1, and has been tested for wind speed exceeding Extra High wind zone as defined in NZS 3604. Testing has been completed to assist in providing solutions for buildings outside the scope of NZS 3604. Contact CHH Woodproducts for further information.

Sustainability

Ecoply Barrier is manufactured from radiata pine, a plantation grown medium density softwood. It is grown on tree farms which are tended and harvested to provide wood for plywood manufacture. The crop is managed on a sustainable basis to yield millable trees. Ecoply Barrier is available Forestry Stewardship Council (SCS-COC-001316) certified upon request.

Health & Safety

Ecoply Barrier should be handled in accordance with the Safety Data Sheet (SDS) for H3.2 CCA treated Ecoply Barrier. Always wear safety glasses or non-fogging goggles when working with Ecoply Barrier. If wood dust exposure is not controlled when machining (sawing, drilling etc.) a P1 or P2 replaceable filter or disposable face piece respirator should be worn. Wear comfortable work gloves to avoid skin irritation and the risk of splinters. Wash hands with mild soap and water after handling panels.

Storage & Handling

Ecoply Barrier panels and tapes must be stored and handled with care to maintain good condition prior to installation:

- The storage area must be protected from sun, rain and wind that would otherwise bring about rapid changes in temperature and humidity.
- Support for the sheets must be provided at both ends and middle to avoid distortion. Ensure bearers in packs above are aligned over bearers below to avoid inducing curves in sheets.
- The stack must be kept dry and clear of ground contact, and placed so that it will not be exposed to mechanical damage.
- The sheets must be stacked flat, NOT on edge.

Maintenance

Ecoply Barrier will not normally require maintenance. However, if damage occurs to the cladding or lining protecting the Ecoply Barrier or to the Ecoply Barrier itself, repairs or replacement should be carried out to ensure the integrity of the rigid air barrier. Small perforations in the panels can be covered by the Frame Sealing Tape or Sealing Tape (200mm, 150mm or 60mm Width, Grey Colour).

BC170827
Further Information Received
04/12/2017

Masonry Render System over Brick - Masonry Render System

General

Description of Works/Specification Notes

This specification deals with Resene Construction Systems Masonry Render System applied over Clay Brick Veneer. The system incorporates the application of a pre-coloured acrylic texture finish.

Building Code Compliance

If the project has a building consent then the following clauses apply.

Durability

The work covered by this part of the specification has been designed and constructed to meet the durability performance requirements of NZBC B2.

On Going Maintenance Instructions

Provide ongoing maintenance instructions required to meet the performance requirements of the NZBC.

Substrate

All the appropriate inspections are to be carried out by a BCA representative and that it complies with the NZBC requirements.

Documents

Abbreviations

The following abbreviations are used throughout this work section:

Documents to also refer to where applicable

- NZBC B1 Structure
- NZBC B2 Durability
- NZBC E2 External Moisture
- NZBC F2 Hazardous Building Materials
- AS/NZS 1170.2 Structural design actions - Wind actions
- NZS 3602 Timber and wood-based products for use in building
- NZS 3603 Timber structures standard
- NZS 3604 Timber framed buildings
- BRANZ Bulletin 353 Ground clearances
- BRANZ Bulletin 418 Weathertightness do's and don'ts
- BRANZ Bulletin 439 Condensation risk in walls

Manufacturers Documents

- Resene Construction Systems Technical Resources
- Resene Construction Systems TradeSpec
- Resene Construction Systems Project Guide
- Resene: Total Colour System

Copies of the above relevant company documents referred to in this specification are available at;

Resene Construction Systems
Web: reseneconstruction.co.nz
Telephone: 0800 50 70 40

Resene Paints
Web:resene.co.nz
Telephone: 0800 RESENE (0800 737 363)

BC170827
Further Information Received
04/12/2017

No Substitutions

Substitutions are not permitted to any specified Resene Construction Systems system. Materials and execution to Resene Construction Systems specification except where varied by this specification and supported by architectural detailing.

Qualifications

Use only LBP registered plasterers licensed to apply the Resene Construction Systems exterior render systems.

Documentation

Finish Sample

Submit one 300 mm x 300 mm sample of the selected texture finish and colour for approval on request by the main contractor or specifier. Obtain signature of acceptance on sample and return to the Registered Plasterer.

Maintenance Instructions

Provide Resene Construction Systems Maintenance Guide on or before practical completion of the contract for issuing to the building owner. Resene Construction Systems Maintenance Guide to be provided on request.

Producer Statement

If the project has a building consent then a producer statement shall be supplied by the plasterer in the form as required by the BCA.

Health and Safety

Refer to the requirements of the Health and Safety in Employment Act 2015 and Worksafe NZ: Guidelines for the provision of facilities and general safety in the construction industry. If the elimination or isolation of potential hazards and risks is not possible then minimise hazards and risks in this work on site by using the proper equipment and techniques as required in the MPNZA Painters hazard handbook. Supply protective clothing and equipment. Inform employees and others on site of the hazards and put into place procedures for dealing with emergencies. Obtain from Resene Construction Systems the Material Safety Data Sheets for each product. Keep sheets on site and comply with the required safety procedures. Confirmation at the start of the project as to whether a Site Specific Safety Plan is to be produced by the Registered Plasterer prior to works starting.

Warranty

Warrant this system under normal environmental and use conditions against failure. Resene Construction Systems system warranty.
Materials: by Resene Construction Systems - 15 Years Materials only
Execution: by Registered Plasterer - 5 Years Workmanship only

OnSite Assistance

Allow to inspect the whole of the work at each stage. Determine a programme for onsite assistance including notification when each part and stage of the work is ready for inspection prior to the work commencing. Permit representatives of Resene Construction Systems to inspect the work in progress and to take samples of their products from site if requested.

Components

Rockcote PM100 Quick Render Base Coat

- Polymer-modified cement-based dry plaster mix. Supplied in 20 kg bags

- View Technical Data Sheet - View Safety Data Sheet

RCS Blue Mesh (1200mm wide)

- Alkali Resistant 6mm x 5mm Weave mesh supplied in 50m rolls

- View Technical Data Sheet

Rockcote PM100 Quick Render Level Coat

- Polymer-modified cement-based dry plaster mix. Supplied in 20 kg bags

BC170827
Further Information Received
04/12/2017

- View Technical Data Sheet - View Safety Data Sheet

Rockcote RenderPrime

- Water based acrylic polymer dispersion. Supplied in 15 litre pails.

- View Safety Data Sheet

Bostik MS Sealant (Tubes)

- 550gm Cartridges

- View Technical Data Sheet - View Safety Data Sheet

Rockcote Classico

- 100% acrylic, high-build texture coating. Supplied in 15 Litre pails

- View Technical Data Sheet - View Safety Data Sheet

Resene X200 (2 Coats)

- Acrylic reinforced waterproof membrane. Supplied in 4 and 10 litre pails. Tinted to the selected colour

- View Technical Data Sheet - View Safety Data Sheet

Installation

The following Resene Construction Systems TradeSpec® Documents can be found at http://tradespec.co.nz
All Technical Data Sheets are available at https://reseneconstruction.co.nz/tds
All Safety Data Sheets are available at https://reseneconstruction.co.nz/sds

- Check and Prepare Masonry / Clay brick veneer Substrate - Refer to RCS TradeSpec™ document 3.1
- Rockcote PM100 Quick Render Base Coat
- RCS Mesh (Standard Weave)
- Rockcote PM100 Quick Render Levelling Coat
- Rockcote RenderPrime
- Rockcote Classico Texture Finish
- Resene X200 Paint Finish (2 Coats)
- Light Reflectance Values (LRV) - Refer to RCS TradeSpec™ document 1.6
- Maintenance - Refer to RCS TradeSpec™ document 1.7
- Cleaning Up - Refer to RCS TradeSpec™ document 5.10

portant:

This specification must be read in conjunction with the Resene Construction Systems technical drawings.
No alteration to the Resene Construction Systems RenderSpec® is permitted.
This Resene Construction Systems RenderSpec® must be read in conjunction with Resene Construction Systems TradeSpec® available at http://tradespec.co.nz
All Technical Data Sheets are available at https://reseneconstruction.co.nz/tds
All Safety Data Sheets are available at https://reseneconstruction.co.nz/sds

RECEIVED
27 OCT 2017
BY: UA

J0035

BRANZ Appraised
Appraisal No. 581 [2015]

DAMPFIX 3 WET AREA MEMBRANE



Appraisal No. 581 [2015]

This Appraisal replaces BRANZ Appraisal No. 581 [2007].

Amended 02 February 2017

BRANZ Appraisals

Technical Assessments of products for building and construction.

Product

1.1 Dampfix 3 Wet Area Membrane is a liquid-applied waterproofing membrane for use under ceramic or stone tile finishes in internal wet areas.

Scope

2.1 Dampfix 3 Wet Area Membrane has been appraised for use as a waterproofing membrane for internal wet areas of buildings, within the following scope:

- on floor substrates of concrete, plywood, compressed fibre cement sheet and fibre cement sheet tile underlay, and on wall substrates of concrete, concrete masonry, wet area fibre cement sheet lining systems and wet area plasterboard lining systems; and,
- when protected from physical damage by ceramic or stone tile finishes; and,
- where floors are designed and constructed such that deflections do not exceed 1/360th of the span.

2.2 The use of Dampfix 3 Wet Area Membrane on concrete slabs where hydrostatic or vapour pressure is present is outside the scope of this Appraisal.

2.3 Movement and control joints in the substrate must be carried through to the tile finish. The design and construction of the substrate and movement and control joints is specific to each building, and therefore the responsibility of the building designer and building contractor and is outside the scope of this Appraisal.

2.4 Ceramic or stone tile finishes are outside the scope of this Appraisal.

2.5 The membrane must be installed by Bostik New Zealand Limited Trained and Approved Applicators.

Building Regulations

New Zealand Building Code (NZBC)

3.1 **In the opinion of BRANZ, Dampfix 3 Wet Area Membrane, if designed, used, installed and maintained in accordance with the statements and conditions of this Appraisal, will meet the following provisions of the NZBC:**

Clause B2 DURABILITY: Performance B2.3.1 (b) 15 years. Dampfix 3 Wet Area Membrane meets this requirement. See Paragraph 9.1.

Clause E3 INTERNAL MOISTURE: Performance E3.3.6. Interior wet area floors and walls incorporating Dampfix 3 Wet Area Membrane meets this requirement. See Paragraphs 11.1 to 11.4.

Clause F2 HAZARDOUS BUILDING MATERIALS: Performance F2.3.1. Dampfix 3 Wet Area Membrane meets this requirement and will not present a health hazard to people.

3.2 This is an Appraisal of an Alternative Solution in terms of New Zealand Building Code compliance.

Bostik New Zealand Ltd
PO Box 35-093
Naenae 5041
Lower Hutt
Tel: 04 567 5119
Fax: 04 577 3776
Web: www.bostik.co.nz

BRANZ
1222 Moonshine Rd,
RD1, Porirua 5381
Private Bag 50 908
Porirua 5240,
New Zealand
Tel: 04 237 1170
branz.co.nz

Readers are advised to check the validity of this Appraisal by referring to the Valid Appraisals listing on the BRANZ website, or by contacting BRANZ.

Technical Specification

4.1 Materials supplied by Bostik New Zealand Limited are as follows:

- **Dampfix 3** - A two-component, cementitious, acrylic modified, fibre reinforced waterproofing membrane. It is supplied as a powder in 10 kg multi-wall bags and a liquid in 10 kg plastic pails. When dry, the membrane is grey in colour.
- **ASA Multiprime** - A synthetic latex based primer for a variety of porous substrates. It is supplied as an opaque pink liquid in 1, 5 and 20 litre cans.
- **Bostik N40 Primer** - A solvent based etching primer for priming PVC wastes. It is available in 1 litre cans.
- **Dampfix Moisture Seal** - A two part water based epoxy for sealing against rising damp, seepage, grease, oil, detergent and mild chemicals. It is supplied as 4, 8, 20 and 40 litre kits.
- **ASA Neutral Cure Silicone** - A flexible, neutral cure silicone for use as expansion joint filler and bond breaker for wall/wall and wall/floor junctions. It is supplied as a white or coloured paste in 300 ml cartridges.
- **Bostik NP Primer** - A 2 component water based epoxy primer for non-porous substrates. It is available in 4 and 8 litre kits.

Handling and Storage

5.1 All materials must be stored inside, up off concrete floors, in dry conditions, out of direct sunlight and out of freezing conditions. The membrane products have a shelf life of 24 months from date of manufacture in the original unopened packaging. Once opened, the products must be used within 3 months.

Technical Literature

6.1 Refer to the Appraisals listing on the BRANZ website for details of the current Technical Literature for Dampfix 3 Wet Area Membrane. The Technical Literature must be read in conjunction with this Appraisal. All aspects of design, use, installation and maintenance contained in the Technical Literature and within the scope of this Appraisal must be followed.

Design Information

General

7.1 Dampfix 3 Wet Area Membrane is for use in buildings where an impervious waterproof membrane is required to floors and walls to prevent damage to building elements and adjoining areas.

7.2 Dampfix 3 is designed to be used where a quicker curing time is required, such as in cool or humid conditions.

7.3 The membrane must be protected from physical damage by the application of ceramic or stone tile finishes.

7.4 Movement and control joints may be required depending on the shape and size of the building or room, and the tile finish specified. Design guidelines can be found in the BRANZ Good Practice Guide to Tiling.

7.5 Timber framing systems must comply with NZS 3604, or where specific engineering design is used, the framing shall be of at least equivalent stiffness to the framing provisions of NZS 3604, or comply with the serviceability criteria of AS/NZS 1170. In all cases framing must be provided so that the maximum span of the substrate as specified by the substrate manufacturer is met and all sheet edges are fully supported. Timber framing systems supporting the substrates must be constructed such that deflections do not exceed 1/360th of the span. Where NZS 3604 is used, the allowable joist spans given in Table 7.1 shall be reduced by 20%.

Readers are advised to check the validity of this Appraisal by referring to the Valid Appraisals listing on the BRANZ website, or by contacting BRANZ.

Substrates

Plywood

8.1 Plywood must be a minimum of 17 mm thick complying with AS/NZS 2269, CD Grade Structural with sanded C face upwards and treated to H3.2 (CCA treated). LOSP treated plywood must not be used. The Plywood must be supported with dwangs or framing with a maximum span of 400 mm in each direction, fixed with 10 g x 50 mm stainless steel countersunk head screws at 150 mm centres on the edges and 200 mm through the body of the sheets.

Fibre Cement Compressed Sheet/ Fibre Cement Sheet Tile Underlay

8.2 Fibre cement compressed sheet and tile underlay must be manufactured to comply with the requirements of AS 2908.2. It must be specified by the manufacturer as being suitable for use as a wet area substrate and fixed according to the manufacturers instructions. The Fibre Cement Compressed Sheet must be of a thickness to meet specific structural design requirements.

Concrete and Concrete Masonry

8.3 Concrete and concrete masonry substrates must be to a specific engineering design meeting the requirements of the NZBC, such as concrete construction to NZS 3101 and NZS 3604 Concrete Slab-On-Ground Floors and Concrete masonry to NZS 4229 and NZS 4230.

Wet Area Wall Linings

8.4 Plasterboard wall linings must be manufactured to comply with AS/NZS 2588, and be covered by a valid BRANZ Appraisal for use in internal wet areas.

Durability

Serviceable Life

9.1 Dampfix 3 Wet Area Membrane, when subjected to normal conditions of environment and use, is expected to have a serviceable life of at least 15 years and be compatible with ceramic or stone tile finishes with a design service life of 15-25 years.

Maintenance

10.1 No maintenance of the membrane will be required provided significant substrate movement does not occur and the tile finish remains intact. Regular checks must be made of the tiled areas to ensure they are sound and will not allow moisture to penetrate. Any cracks or damage must be repaired immediately by repairing the tiles, grouts and sealants.

10.2 In the event of damage to the membrane, the tiling must be removed and the membrane repaired by removing the damaged portion and applying a patch as for new work.

10.3 Drainage outlets must be maintained to operate effectively, and ceramic or stone tile finishes must be kept clean.

Internal Moisture

11.1 Dampfix 3 Wet Area Membrane is impervious to water and when appropriately designed and installed will avoid the likelihood of water penetrating behind linings or entering concealed spaces.

11.2 Dampfix 3 Wet Area Membrane is suitable for use to contain accidental overflow to meet NZBC Clause E3.3.2. A means of Code Compliance for overflow is given in NZBC Acceptable Solution E3/AS1, Paragraph 2.

11.3 Surfaces must be finished with ceramic or stone tile finishes. A means of Code Compliance to NZBC Clause E3.3.3 is given in NZBC Acceptable Solution E3/AS1, Paragraph 3.1.1 (b) and 3.1.2 (b).

11.4 Falls in showers and shower areas must be a minimum of 1 in 50. In unenclosed showers, falls must extend a minimum of 1500 mm out from the shower rose. Floor wastes must be provided and the floor must fall to the outlet.

11.5 The waterproofing membrane must completely cover shower bases, and for unenclosed showers it must extend a minimum of 1500 mm out from the shower rose. Further design guidance on waterproofing wet areas, including waterproofing walls and junctions can be obtained from AS 3740, the 'BRANZ Good Practice Guide to Tiling', and flooring and wallboard manufacturers.

Readers are advised to check the validity of this Appraisal by referring to the Valid Appraisals listing on the BRANZ website, or by contacting BRANZ.

11.6 Where water resistant wall finishes such as prefinished sheet materials are used, they must flash over the membrane a minimum of 30 mm.

11.7 BRANZ recommends the entire floor be covered by a waterproof membrane for bath, shower and spa rooms where timber and plywood floors are used.

Installation Information

Installation Skill Level Requirement

12.1 Installation of the membrane must be completed by Bostik New Zealand Limited Trained and Approved Applicators.

12.2 Installation of substrates must be completed by tradespersons with an understanding of internal wet area construction, in accordance with instructions given within the Bostik New Zealand Limited Technical Literature and this Appraisal.

Preparation of Substrates

13.1 Substrates must be dry, clean and stable before installation commences. Surfaces must be even and free from nibs, sharp edges, dust, dirt or other materials such as oil, grease or concrete formwork release agents.

13.2 Concrete substrates can be checked for dryness by using a hygrometer as set out in BRANZ Bulletin No. 424. The relative humidity of the concrete must be 75% or less before membrane application.

13.3 All voids, cracks, holes, joints and excessively rough areas must be filled to achieve an even and uniform surface. Junctions of substrate abutments, such as at wall/floor and wall/wall junctions must have a bond breaker joint system or reinforced underflashing installed as set out in the Technical Literature.

13.4 Substrates must be primed and allowed to cure before the membrane is installed.

Membrane Installation

14.1 Installation must not be undertaken where the substrate surface temperature is below 10°C or above 35°C.

14.2 Dampfix 3 powder and liquid must be mixed and left to stand for 5 minutes before re-mixing, then applying.

14.3 The membrane must be applied in a minimum of two coats at the rates set out in the Technical Literature. Subsequent coats must be applied in an opposite direction to the previous coat. The total finished system thickness of the Dampfix 3 membrane must be a minimum of 1.2 mm.

14.4 Application can be made by roller (medium/long nap), brush (long bristle), or a notched steel trowel (finished with a flat steel trowel).

14.5 A reinforcement fabric may be embedded into the wet 2nd coat to provide movement protection at wall/wall and wall/floor junctions, or any other areas such as joints in the flooring substrate, floor cracks, or around penetrations in the membrane. In all other situations, reinforcement provisions as set out in this Appraisal and the Technical Literature apply.

14.6 Clean up may be undertaken with water.

Tiling

15.1 The membrane must be fully cured before tiling. The cured membrane must be protected at all times to prevent mechanical damage, so may require temporary covers until the finishing is completed.

15.2 Tiling must be undertaken in accordance with AS 3958.1 and the 'BRANZ Good Tiling Practice Guide'. The compatibility of the tile adhesive must be confirmed with the adhesive manufacturer or Bostik New Zealand Limited.

Readers are advised to check the validity of this Appraisal by referring to the Valid Appraisals listing on the BRANZ website, or by contacting BRANZ.

Inspections

16.1 Critical areas of inspection are:

- Construction of substrates, including crack control and installation of bond breakers and movement control joints.
- Moisture content of the substrate prior to the application of the membrane.
- Acceptance of the substrate by the membrane installer prior to application of the membrane.
- Installation of the membrane to the manufacturer's instructions, particularly installation to the correct thickness and use of reinforcement.
- Membrane curing and integrity prior to the installation of tiles including protection from mechanical damage during curing and prior to tile installation.

Health and Safety

17.1 Safe use and handling procedures for the membrane is provided in the Technical Literature. The materials must be used in conjunction with the relevant Material Safety Data Sheet.

Basis of Appraisal

The following is a summary of the technical investigations carried out:

Tests

18.1 The testing on Dampfix 3 has been undertaken by various organisations:

- Testing to AS/NZS 4858, Water Vapour Transmission to ASTM E96-92 and Water absorption. Adhesion to various substrates, low temperature flexibility to AC148: 2001 and cyclic movement.
- Test methods and results were reviewed by BRANZ and found to be satisfactory.

Other Investigations

19.1 An assessment was made of the durability of Dampfix 3 Wet Area Membrane by BRANZ technical experts.

19.2 Site visits have been carried out by BRANZ to assess the practicability of installation and to examine completed installations.

19.3 The Technical Literature has been examined by BRANZ and found to be satisfactory.

Quality

20.1 The manufacture of the membrane has been examined by BRANZ, and details regarding the quality and composition of the materials used were obtained by BRANZ and found to be satisfactory.

20.2 The quality of supply of the membrane system materials to the market is the responsibility of Bostik New Zealand Limited.

20.3 Quality on site is the responsibility of the Bostik New Zealand Limited Trained and Approved Applicators.

20.4 Designers are responsible for the substrate design, and building contractors are responsible for the quality of construction of substrate systems in accordance with the instructions of the substrate manufacturer, Bostik New Zealand Limited and this Appraisal.

20.5 Building owners are responsible for the maintenance of the tiling or stone finishing systems in accordance with the instructions of Bostik New Zealand Limited.

Readers are advised to check the validity of this Appraisal by referring to the Valid Appraisals listing on the BRANZ website, or by contacting BRANZ.

BRANZ Appraised
Appraisal No. 581 (2015)

Sources of Information

- AS 2908.2: 2000 Cellulose-cement products – Flat sheet.
- AS 3958.1 Guide to the installation of ceramic tiles.
- AS/NZS 1170: 2002 Structural design actions.
- AS/NZS 2269: 2012 Plywood-Structural.
- AS/NZS 2588: 1998 Gypsum Plasterboard.
- AS/NZS 4858: 2004 Wet area membranes.
- NZS 3101: 2006 The design of concrete structures.
- NZS 3604: 2011 Timber-framed buildings.
- Acceptable Solutions and Verification Methods for New Zealand Building Code External Moisture Clause E2, Ministry of Business, Innovation and Employment, Third Edition July 2005 (Amendment 7, 01 January 2017).
- Ministry of Business, Innovation and Employment Record of Amendments for Compliance Documents and Handbooks.
- The Building Regulations 1992.
- Good Practice Guide to Tiling, BRANZ, April 2015.

Amendments

Amendment No. 1, dated 02 February 2017.

This Appraisal has been amended to remove Dampfix 2 Membrane.

Readers are advised to check the validity of this Appraisal by referring to the Valid Appraisals listing on the BRANZ website, or by contacting BRANZ.

BRANZ

In the opinion of BRANZ, Dampfix 3 Wet Area Membrane is fit for purpose and will comply with the Building Code to the extent specified in this Appraisal provided it is used, designed, installed and maintained as set out in this Appraisal.

The Appraisal is issued only to Bostik New Zealand Ltd, and is valid until further notice, subject to the Conditions of Appraisal.

Conditions of Appraisal

1. This Appraisal:
   a) relates only to the product as described herein;
   b) must be read, considered and used in full together with the Technical Literature;
   c) does not address any Legislation, Regulations, Codes or Standards, not specifically named herein;
   d) is copyright of BRANZ.
2. Bostik New Zealand Ltd:
   a) continues to have the product reviewed by BRANZ;
   b) shall notify BRANZ of any changes in product specification or quality assurance measures prior to the product being marketed;
   c) abides by the BRANZ Appraisals Services Terms and Conditions.
   d) Warrants that the product and the manufacturing process for the product are maintained at or above the standards, levels and quality assessed and found satisfactory by BRANZ pursuant to BRANZ's Appraisal of the product.
3. BRANZ makes no representation or warranty as to:
   a) the nature of individual examples of, batches of, or individual installations of the product, including methods and workmanship;
   b) the presence or absence of any patent or similar rights subsisting in the product or any other product;
   c) any guarantee or warranty offered by Bostik New Zealand Ltd.
4. Any reference in this Appraisal to any other publication shall be read as a reference to the version of the publication specified in this Appraisal.
5. BRANZ provides no certification, guarantee, indemnity or warranty, to Bostik New Zealand Ltd or any third party.

For BRANZ

Chelydra Percy
Chief Executive
Date of Issue:
11 June 2015

Readers are advised to check the validity of this Appraisal by referring to the Valid Appraisals listing on the BRANZ website, or by contacting BRANZ.

RECEIVED
27 OCT 2017
BY:

30036

BRANZ Appraised
Appraisal No. 650 [2014]

VERTILINE VERTICAL SHIPLAP WEATHERBOARD CAVITY SYSTEM



Appraisal No. 650 (2014)

This Appraisal replaces BRANZ Appraisal No. 650 (2009).

Amended 13 October 2017

BRANZ Appraisals

Technical Assessments of products for building and construction.

Hermpac
Herman Pacific Limited
PO Box 35-209
Browns Bay
Auckland

Tel: 09 426 5475
Fax: 09 426 7638
Internet: www.hermpac.co.nz

BRANZ
BRANZ
1222 Moonshine Rd,
RD1, Porirua 5381
Private Bag 50 908
Porirua 5240,
New Zealand
Tel: 04 237 1170
branz.co.nz

Product

1.1 The VertiLine Vertical Shiplap Weatherboard Cavity System is a cavity-based shiplap timber weatherboard external wall cladding system for residential and light commercial type buildings where domestic construction techniques are used.

1.2 The system consists of vertically fixed Herman Pacific Limited shiplap weatherboards, ventilated cavity battens, flashings and accessories and is finished with a premium penetrating oil stain or an exterior paint system to Herman Pacific Limited specifications.

1.3 The system incorporates a primary and secondary means of weather resistance (first and second line of defence) against water penetration by separating the cladding from the external wall frame with a minimum 18 mm drained cavity.

Scope

2.1 The VertiLine Vertical Shiplap Weatherboard Cavity System incorporating stain finished weatherboards and paint finished DuraLarch and Ashin-Dura weatherboards has been appraised as an external wall cladding system for buildings within the following scope:

- the scope limitations of NZBC Acceptable System E2/AS1, Paragraph 1.1; and,
- constructed with timber framing complying with the NZBC; and,
- with a risk score of 0-20, calculated in accordance with NZBC Acceptable Solution E2/AS1, Table 2; and,
- situated in NZS 3604 Wind Zones up to, and including Extra High.

2.2 The VertiLine Vertical Shiplap Weatherboard Cavity System incorporating stain finished weatherboards has also been appraised for weathertightness and structural wind loading when used as an external wall cladding system for buildings within the following scope:

- the scope limitations of NZBC Acceptable Solution E2/AS1, Paragraph 1.1 with regards to building height and floor plan area; and,
- constructed with timber framing subject to specific engineering design; and,
- situated in specific design wind pressures up to a maximum design differential ultimate limit state (ULS) of 2.5 kPa.

Readers are advised to check the validity of this Appraisal by referring to the Valid Appraisals listing on the BRANZ website, or by contacting BRANZ.

2.3 The VertiLine Vertical Shiplap Weatherboard Cavity System incorporating paint finished cedar weatherboards has been appraised as an external wall cladding system for buildings within the following scope:

- the scope limitations of NZBC Acceptable System E2/AS1, Paragraph 1.1; and,
- constructed with timber framing complying with the NZBC; and,
- with a risk score of 0-20, calculated in accordance with NZBC Acceptable Solution E2/AS1, Table 2; and,
- situated in NZS 3604 Wind Zones up to, and including Medium when dwangs or structural Vertibat cavity battens are at maximum 480 mm centres, and NZS 3604 Wind Zones up to, and including Very High when dwangs or structural Vertibat cavity battens are at maximum 400 mm centres.

2.4 The VertiLine Vertical Shiplap Weatherboard Cavity System must only be installed vertically on vertical, flat surfaces.

2.5 The VertiLine Vertical Shiplap Weatherboard Cavity System is appraised for use with aluminium window and door joinery that is installed with vertical jambs and horizontal heads and sills. *(The Appraisal of the VertiLine Vertical Shiplap Weatherboard Cavity System relies on the joinery meeting the requirements of NZS 4211 for the relevant Wind Zone or wind pressure.)*

Building Regulations

New Zealand Building Code (NZBC)

3.1 **In the opinion of BRANZ, the VertiLine Vertical Shiplap Weatherboard Cavity System, if designed, used, installed and maintained in accordance with the statements and conditions of this Appraisal, will meet the following provisions of the NZBC:**

Clause B1 STRUCTURE: Performance B1.3.1, B1.3.2 and B1.3.4 for the relevant physical conditions of B1.3.3 being self-weight, wind, impact and creep [i.e. B1.3.3 (a), (h), (j) and (q)]. The VertiLine Vertical Shiplap Weatherboard Cavity System meets these requirements. See Paragraphs 9.1 - 9.5.

Clause B2 DURABILITY: Performance B2.3.1 (b), 15 years and B2.3.2. The VertiLine Vertical Shiplap Weatherboard Cavity System meets these requirements. See Paragraphs 10.1 and 10.2.

Clause E2 EXTERNAL MOISTURE: Performance E2.3.2. The VertiLine Vertical Shiplap Weatherboard Cavity System meets this requirement. See Paragraphs 14.1 - 14.5.

Clause F2 HAZARDOUS BUILDING MATERIALS: Performance F2.3.1. The VertiLine Vertical Shiplap Weatherboard Cavity System meets this requirement and will not present a health hazard to people.

Technical Specification

4.1 System components and accessories supplied by Herman Pacific Limited are as follows:

Hermpac Shiplap Weatherboards

- Hermpac shiplap weatherboards are manufactured from Canadian Coastal Western Red Cedar. Selected weatherboards are also manufactured from DuraLarch and Ashin-Dura.
- The weatherboard lap and rebate profiles are in accordance with NZS 3617 and BRANZ Bulletin 411. The weatherboards are minimum 18.5 mm thick and are available in a range of widths and face profiles. They are supplied in random lengths. Lengths outside of the general specification may be available by special contract.
- Cedar and DuraLarch weatherboards are supplied unfinished for site finishing with stain or paint prior to installation, or prefinished using the flood coat application method by Machinecoat NZ Limited. Ashin-Dura weatherboards are treated to Hazard Class H3.1 and must be paint finished only. They are supplied primed, or prefinished by Machinecoat NZ Limited. Refer to the Appraisals listing on the BRANZ website for details of the Herman Pacific shiplap weatherboard profiles covered by this Appraisal. *(Note: This Appraisal is only valid when weatherboards with profiles as listed are supplied by Herman Pacific Limited.)*

Readers are advised to check the validity of this Appraisal by referring to the Valid Appraisals listing on the BRANZ website, or by contacting BRANZ.

Accessories

- **Hermpac external corner mouldings** - 40 x 40 mm, 42 x 42 mm and the Hermpac 'Smart Corner' series of profiled external corner moulds supplied in lengths 1.8 m and longer.
- **Hermpac internal corner mould** - 18.5 x 18.5 mm through to 39 x 39 mm and the Hermpac 'Smart Corner' series, supplied in 1.8 m and longer.
- **Hermpac cover boards** - 18 mm thick boards in widths of 69 and 90 mm. The cover boards are supplied in lengths 1.8 m and longer.
- **Hermpac eaves moulding** - 40 x 27 mm, 26 x 15 mm and 30 x 18 mm bevelled profile, supplied in 1.8 m and longer.

  (Note: All timber accessories are manufactured from Canadian Coastal Western Red Cedar or Siberian Larch heartwood.)
- **Hermpac J Mould Flashing** – an extruded aluminium J-shaped flashing to cap the ends of the weatherboards at window and door jambs. The J Mould is available 20 and 29.5 mm wide with a 70 mm return and is supplied in 2.4 and 3.0 m lengths.
- **Hermpac aluminium cavity closure** – an extruded aluminium cavity closure available 20 and 40 mm wide. The cavity closure is supplied in 2.4 and 3.0 m lengths.
- **Vertibat cavity battens** – 45 x 20 mm (V1), 45 x 40 mm (V3), 45 x 45 mm (V5), 70 x 20 mm (V2), 70 x 40 mm (V4) or 70 x 45 mm (V6) Radiata pine batten treated to Hazard Class H3.1 or H3.2. The top and bottom edges are bevelled with a slope. The front and back face of the batten is grooved with 20 mm wide x 5 mm deep rebates at 100 mm centres. The grooves are offset on each face.
- **Vertibat cavity batten fixings** (for 40 or 45 mm thick battens when fixed to studs only) – 12 gauge x 65 mm long Grade 304 or 316 stainless steel screws (for 40 mm battens) and 12 gauge x 75 mm long Grade 304 or 316 stainless steel screws (for 45 mm battens).
- **Hermpac stain finished shiplap weatherboard fixings** (for Vertibat and Cavibat battens fixed to dwangs) - silicon bronze, Grade 304 or Grade 316 stainless steel annular grooved Hermpac Crown Head, Rose Head or Flat Head nails. The nail shank must be minimum 3.15 mm diameter and the length must allow minimum 30 mm penetration of the wall frame.
- **Hermpac stain finished shiplap weatherboard fixings** (for 40 or 45 mm Vertibat battens fixed to studs only) - silicon bronze, Grade 304 or Grade 316 stainless steel annular grooved Hermpac Crown Head, Rose Head or Flat Head nails. The nail shank must be minimum 2.8 mm diameter and the length must allow minimum 30 mm penetration of the Vertibat cavity batten.
- **Hermpac paint finished shiplap weatherboard fixings** (for Vertibat and Cavibat battens fixed to dwangs) - Grade 316 stainless steel annular grooved jolt head nails. The nail shank must be minimum 3.15 mm diameter and the length must allow minimum 30 mm penetration of the wall frame.
- **Hermpac paint finished shiplap weatherboard fixings** (for 40 or 45 mm Vertibat battens fixed to studs only) - Grade 316 stainless steel annular grooved jolt head nails. The nail shank must be minimum 3.15 mm diameter and the length must allow minimum 30 mm penetration of the Vertibat cavity batten.
- **Hermpac clinch nails** - 27 x 2.0, 40 x 2.0 or 50 x 2.0 mm Grade 316 stainless steel annular grooved nails with an off-set flat head.
- **Hermpac cover board fixings** - 50 x 2.8 mm silicon bronze, Grade 304 or Grade 316 stainless steel annular grooved Hermpac Crown Head, Rose Head or Flat Head nails.

4.2 Accessories used with the VertiLine Vertical Shiplap Weatherboard Cavity System which are supplied by the building contractor are:

- **Flexible wall underlay** - building paper complying with NZBC Acceptable Solution E2/AS1, Table 23, or breather-type membranes covered by a valid BRANZ Appraisal for use as wall underlays.
- **Flexible wall underlay support** – polypropylene strap, 75 mm galvanised mesh, galvanised wire, or additional vertical battens for securing the flexible wall underlay in place and preventing bulging of the bulk insulation into the drainage cavity. *(Note: mesh and wire galvanising must comply with AS/NZS 4534.)*

Readers are advised to check the validity of this Appraisal by referring to the Valid Appraisals listing on the BRANZ website, or by contacting BRANZ.

- **Rigid wall underlay** - Plywood or fibre cement sheet complying with NZBC Acceptable Solution E2/AS1, Table 23, or rigid sheathing covered by a valid BRANZ Appraisal for use as rigid air barrier systems.
- **Flexible sill and jamb flashing tape** – flexible flashing tapes complying with NZBC Acceptable Solution E2/AS1, Paragraph 4.3.11, or flexible flashing tapes covered by a valid BRANZ Appraisal for use around window and door joinery openings.
- **Window and door trim cavity air seal** - air seals complying with NZBC Acceptable Solution E2/AS1, Paragraph 9.1.6, or self-expanding, moisture cure polyurethane foam air seals covered by a valid BRANZ Appraisal suitable for use around window, door and other wall penetration openings.
- **Cavibat cavity battens** - manufactured from extruded polypropylene. The battens are cut after extruding to a finished size of approximately 45 mm wide by 18 mm thick. The battens are coloured green and are supplied in 1200 mm long lengths. Cavibat cavity battens are covered by BRANZ Appraisal No. 524 (2012).
- **Cavibat fixings** - 40 x 2.5 mm flat head hot-dip galvanised nails or stainless steel finishing brads used to temporarily fix the battens in place until the cladding is installed.
- **Vertibat cavity batten fixings** (20 mm thick batten) - 40 x 2.5 mm flat head hot-dipped galvanised nails or 50 x 2.87 mm hot-dipped galvanised gun nails to temporarily fix the battens in place prior to installation of the cladding.
- **Vertibat cavity batten fixings** (40 or 45 mm thick battens when fixed to dwangs) - 60 x 2.8 mm flat head hot-dipped galvanised nails or 60 x 2.87 mm hot-dipped galvanised gun nails to temporarily fix the battens in place prior to installation of the cladding.
- **Cavity vent strip** - uPVC, aluminium or stainless steel, punched with 3-5 mm diameter holes or slots complying with NZBC Acceptable Solution E2/AS1, Paragraph 9.1.8.3.
- **Flashings** - including external corner flashing, internal corner flashing, horizontal inter-storey joint flashing, balustrade and parapet saddle flashing and balustrade and parapet cap flashings. Refer to NZS 3604, Section 4 and NZBC Acceptable Solution E2/AS1, Table 20 and Table 21 for durability and material compatibility requirements.
- **Aluminium joinery head flashings** - as supplied by the joinery manufacturer or contractor.
- **Flexible sealant** - sealant complying with NZBC Acceptable Solution E2/AS1, or sealant covered by a valid BRANZ Appraisal for use as a weather sealing sealant for exterior use.

Finishing System Specification - Stain Finish

4.3 Prior to the installation of stain finished weatherboards, the back, face, ends and edges of the Hermpac shiplap weatherboards not supplied prefinished must be sealed with an exterior grade oil-based penetrating stain. At least two coats of an exterior grade quality oil-based penetrating stain must be used over the front face of the Hermpac shiplap weatherboards to protect the weatherboards and give the desired finish colour to the exterior walls. The stain must be recommended for use as a wall cladding stain by the manufacturer and must be applied in accordance with the manufacturer's instructions. Proprietary stain systems have not been assessed, and are therefore outside the scope of this Appraisal. *(Note: Herman Pacific Limited recommends the use of oil based stains manufactured by Resene and WoodX.)*

Finishing System Specification – Paint Finish

4.4 Prior to the installation of paint finished weatherboards that are supplied unprimed, the back, face, ends and edges of the Hermpac shiplap weatherboards must be primed in accordance with the Technical Literature for the relevant timber type. All exposed edges, including top edges at sills and all bottom edges of Hermpac shiplap weatherboards and accessories not supplied prefinished, must be finished with at least two coats of an exterior grade acrylic latex paint complying with any of Parts 7, 8, 9 or 10 of AS 3730 to protect the weatherboards and give the desired finish colour to the exterior walls. The paint must be recommended for use as a wall cladding paint for the selected timber by the manufacturer and must be applied in accordance with the manufacturer's instructions. Proprietary paint systems have not been assessed, and are therefore outside the scope of this Appraisal. *(Note: For Hermpac shiplap weatherboards, Herman Pacific Limited recommends using paint with a colour that has a Light Reflectance Value (LRV) of greater than or equal to 40%.)*

Readers are advised to check the validity of this Appraisal by referring to the Valid Appraisals listing on the BRANZ website, or by contacting BRANZ.

Handling and Storage

5.1 Handling and storage of all materials supplied by Herman Pacific Limited or the building contractor, whether on site or off-site, is under the control of the building contractor. Hermpac vertical shiplap weatherboards must be stacked flat and true, clear of the ground by a minimum of 150 mm and supported on dry and clean timber bearers at maximum 900 mm centres. They must be kept dry at all times either by storing within an enclosed building or when stored externally an additional secondary cover to the plastic wrapping is required. Care must be taken to avoid damage to edges, ends and the weatherboard surfaces.

5.2 Accessories must be stored so they are kept clean, dry and undamaged. All accessories must be used within the maximum storage period recommended by the manufacturer.

Technical Literature

6.1 Refer to the Appraisals listing on the BRANZ website for details of the current Technical Literature for the VertiLine Vertical Shiplap Weatherboard Cavity System. The Technical Literature must be read in conjunction with this Appraisal. All aspects of design, use, installation and maintenance contained in the Technical Literature and within the scope of this Appraisal must be followed.

Design Information

Framing

Timber Treatment

7.1 Timber wall framing behind the VertiLine Vertical Shiplap Weatherboard Cavity System must be treated as required by NZBC Acceptable Solution B2/AS1.

Timber Framing

7.2 Timber framing must comply with NZS 3604 for buildings or parts of buildings within the scope limitations of NZS 3604. Buildings or parts of buildings outside the scope of NZS 3604 must be to a specific design in accordance with NZS 3603 and AS/NZS 1170. Where specific design is required, the framing must be of at least equivalent stiffness to the framing provisions of NZS 3604. In all cases studs must be at maximum 600 mm centres. Where Vertibat or Cavibat cavity battens are fixed to dwangs, the dwangs must be fitted flush between the studs at maximum 480 mm centres. Where 40 or 45 mm thick Vertibat cavity battens are fixed to studs only, dwangs must be fitted flush between the studs at maximum 800 mm centres.

7.3 Additional framing may be required at soffits, internal and external corners and window and door openings for the support and fixing of cavity battens and the VertiLine Vertical Shiplap Weatherboard Cavity System.

7.4 Timber wall framing behind where weatherboards are joined over a cavity batten must be nominal 50 mm thickness (i.e. 45 mm minimum finished thickness).

7.5 Timber wall framing must have a maximum moisture content of 24% at the time of the cladding application. *(Note: If Hermpac shiplap weatherboards are fixed to framing with a moisture content of greater than 24% problems may occur at a later date due to excessive timber shrinkage.)*

General

8.1 When the VertiLine Vertical Shiplap Weatherboard Cavity System is used for specifically designed buildings up to 2.5 kPa design differential ULS wind pressure, only the weathertightness aspects of the cladding and maximum framing centres are within the scope of this Appraisal. All other aspects of the building need to be specifically designed and are outside the scope of this Appraisal.

8.2 Punchings in the cavity vent strip must provide a minimum ventilation opening area of 1000 mm^2 per lineal metre of wall in accordance with the requirements of NZBC Acceptable System E2/AS1, Paragraph 9.1.8.3 (b). *(Note: Vertibat cavity battens can be used to provide vermin proofing at the bottom of the cavity. Cavibat cavity battens do not provide vermin proofing to the bottom of the drained cavity and an additional cavity vent strip must be used.)*

Readers are advised to check the validity of this Appraisal by referring to the Valid Appraisals listing on the BRANZ website, or by contacting BRANZ.

8.3 The ground clearance to finished floor levels as set out in NZS 3604 must be adhered to at all times. At ground level, paved surfaces, such as footpaths, must be kept clear of the bottom edge of the cladding system by a minimum of 100 mm, and unpaved surfaces by 175 mm in accordance with the requirements of NZBC Acceptable System E2/AS1, Table 18.

8.4 At balcony, deck or roof/wall junctions, the bottom edge of the VertiLine Vertical Shiplap Weatherboard Cavity System must be kept above the top surface of any adjacent roof flashing by a minimum of 35 mm in accordance with NZBC Acceptable System E2/AS1, Paragraph 9.1.3.

8.5 All external walls of buildings must have barriers to airflow in the form of interior linings with all joints stopped for wind zones up to and including Very High, and rigid underlays for buildings in the Extra High wind zone and specifically designed buildings up to 2.5 kPa design differential ULS wind pressure. Unlined gables and walls must incorporate a rigid sheathing or an air barrier which meets the requirements of NZBC Acceptable Solution E2/AS1, Table 23. For attached garages, wall underlays must be selected in accordance with NZBC Acceptable Solution E2/AS1, Paragraph 9.1.3.4. Where rigid underlays are used, the weatherboard fixing lengths must be increased by a minimum of the thickness of the underlay.

8.6 Where the system abuts other cladding systems, designers must detail the junction to meet their own requirements and the performance requirements of the NZBC. Details not included within the Technical Literature have not been assessed and are outside the scope of this Appraisal.

Inter-storey Junctions

8.7 Inter-storey drained joints must be constructed in accordance with the Technical Literature. Inter-storey drained joints must be provided to limit continuous cavities to the lesser of 2-storeys or 7 metres in height, in accordance with the requirements of NZBC Acceptable Solution E2/AS1, Paragraph 9.1.9.4 (b).

Structure

Mass

9.1 The mass of the VertiLine Vertical Shiplap Weatherboard Cavity System is less than 30 kg/m^2. The system is therefore considered a lightweight cladding in terms of NZS 3604.

Impact Resistance

9.2 The VertiLine Vertical Shiplap Weatherboard Cavity System has good resistance to impact loads likely to be encountered in normal residential use. The likelihood of impact damage to the system when used in light commercial situations should be considered at the design stage, and appropriate protection such as the installation of bollards and barriers should be considered for vulnerable areas.

Wind Zones

9.3 The VertiLine Cavity System incorporating stain finished weatherboards is suitable for use in all Wind Zones of NZS 3604, up to and including Extra High where buildings are designed to meet the requirements of NZBC Acceptable System E2/AS1, Paragraph 1.1, or up to 2.5 kPa design differential ULS wind pressure where buildings are specifically designed.

9.4 The VertiLine Vertical Shiplap Weatherboard Cavity System incorporating paint finished DuraLarch and Ashin-Dura weatherboards is suitable for use in all Wind Zones of NZS 3604, up to and including Extra High where buildings are designed to meet the requirements of NZBC Acceptable System E2/AS1, Paragraph 1.1.

9.5 The VertiLine Vertical Shiplap Weatherboard Cavity System incorporating paint finished cedar weatherboards is suitable for use in NZS 3604 Wind Zones up to, and including Medium when dwangs or structural Vertibat cavity battens are at maximum 480 mm centres, and NZS 3604 Wind Zones up to, and including Very High when dwangs or structural Vertibat cavity battens are at maximum 400 mm centres.

Readers are advised to check the validity of this Appraisal by referring to the Valid Appraisals listing on the BRANZ website, or by contacting BRANZ.

Durability

Serviceable Life

10.1 VertiLine Vertical Shiplap Weatherboard Cavity System installations are expected to have a serviceable life of at least 20 years provided the system is maintained in accordance with this Appraisal and the Hermpac shiplap weatherboards are continuously protected by a stain or paint finish. *(Note: For stain finished weatherboards, this opinion only covers serviceability with regards to structural and weathertightness performance. It does not cover appearance, which may deteriorate significantly, especially when proper and regular maintenance is not carried out.)*

10.2 Microclimatic conditions, including geothermal hot spots, industrial contamination and corrosive atmospheres and contamination from agricultural chemicals or fertilisers can convert mildly corrosive atmosphere into aggressive environments for fasteners. The fixing of weatherboards in areas subject to microclimatic conditions requires specific design in accordance with NZS 3604, Paragraph 4.2.4, and is outside the scope of this Appraisal.

Maintenance

11.1 Regular maintenance is essential to ensure the performance requirements of the NZBC are continually met and to ensure the maximum serviceability of the system.

11.2 Regular cleaning (at least annually) of the stain or paint coating is required to remove grime, dirt and organic growth and to maximise the life and appearance of the coating. Grime may be removed by brushing with a soft brush, warm water and detergent.

11.3 Recoating of the stain finish will be necessary throughout the life of the cladding system. Restaining must be carried out every 2-3 years or in accordance with the stain manufacturer's instructions. Restaining will be required more frequently on exposed northern and western facing walls. When restaining, care must be taken to ensure bottom edges and shiplap edges are well covered and penetrated with the stain.

11.4 Recoating of the paint finish will be necessary throughout the life of the cladding system. Repainting must be carried out every 7-10 years or in accordance with the paint manufacturer's instructions. When repainting, care must be taken to ensure bottom edges and shiplap edges are well covered with the paint.

11.5 Annual inspections must be made to ensure that all aspects of the cladding system, including flashings and joints remain in a weatherproof condition. Any damaged areas or areas showing signs of deterioration which would allow water ingress must be repaired immediately. Sealant, stain or paint coatings, flashings or the weatherboards must be repaired in accordance with the relevant manufacturer's instructions.

11.6 Minimum ground clearances as set out in this Appraisal and the Technical Literature must be maintained at all times during the life of the system. *(Note: Failure to adhere to the minimum ground clearances given in this Appraisal and the Technical Literature will adversely affect the long term durability of the VertiLine Vertical Shiplap Weatherboard Cavity System.)*

Control of External Fire Spread

12.1 The VertiLine Vertical Shiplap Weatherboard Cavity System is suitable for use on buildings with an SH Risk Group classification, a building height of ≤ 10 m and at a distance of ≥ 1.0 m to the relevant boundary. Refer to NZBC Acceptable Solutions C/AS2 - C/AS6, Paragraph 5.8.1 for the specific exterior surface finishes requirements for other building Risk Groups. *(Note: The scope of this Appraisal limits building heights to 10 m in accordance with the limitations of NZBC Acceptable Solution E2/AS1, Paragraph 1.1 (a). The building heights referenced in Paragraph 12.1 above are as defined in the Definitions Sections of NZBC Clauses C1 - C6 Protection from Fire.)*

Readers are advised to check the validity of this Appraisal by referring to the Valid Appraisals listing on the BRANZ website, or by contacting BRANZ.

Prevention of Fire Occurring

13.1 Separation or protection must be provided to the VertiLine Vertical Shiplap Weatherboard Cavity System from heat sources such as fire places, heating appliances, flues and chimneys. Part 7 of NZBC Acceptable Solutions C/AS1 – C/AS6 and NZBC Verification Method C/VM1 provide methods for separation and protection of combustible materials from heat sources.

External Moisture

14.1 The VertiLine Vertical Shiplap Weatherboard Cavity System, when installed in accordance with this Appraisal and the Technical Literature will prevent the penetration of moisture that could cause undue dampness or damage to building elements.

14.2 The cavity must be sealed off from the roof and sub-floor space to meet code compliance with NZBC Clause E2.3.5.

14.3 The VertiLine Vertical Shiplap Weatherboard Cavity System allows excess moisture present at the completion of construction to be dissipated without permanent damage to building elements to meet code compliance with Clause E2.3.6.

14.4 The details given in the Technical Literature for weather sealing are based on the principle of having a first and second line of defence against moisture entry for all joints, penetrations and junctions. The ingress of moisture must be excluded by detailing joinery and wall interfaces as shown in the Technical Literature. Weathertightness details that are developed by the designer are outside the scope of this Appraisal and are the responsibility of the designer for compliance with the NZBC.

14.5 The VertiLine Vertical Shiplap Weatherboard Cavity System, where there is a designed cavity drainage path for moisture that penetrates the cladding, does not reduce the requirements for junctions, penetrations, etc to remain weather resistant.

Internal Moisture

15.1 Buildings must be constructed with an adequate combination of thermal resistance and ventilation, and space temperature must be provided to all habitable spaces, bathrooms, laundries and other spaces where moisture may be generated or may accumulate.

Water Vapour

15.2 The VertiLine Vertical Shiplap Weatherboard Cavity System is not a barrier to the passage of water vapour, and when installed in accordance with this Appraisal will not create a risk of moisture damage resulting from condensation.

Installation Information

Installation Skill Level Requirements

16.1 Installation must always be carried out in accordance with the VertiLine Vertical Shiplap Weatherboard Cavity System Technical Literature and this Appraisal by, or under the supervision of, a Licensed Building Practitioner (LBP) with the relevant Licence Class.

VertiLine Vertical Shiplap Weatherboard Cavity System Installation

Wall Underlay and Flexible Sill and Jamb Tape Installation

17.1 The selected wall underlay and flexible sill and jamb tape system must be installed by the building contractor in accordance with the underlay and tape manufacturer's instructions prior to the installation of the cavity battens and the rest of the VertiLine Vertical Shiplap Weatherboard Cavity System. Flexible wall underlay must be installed horizontally and be continuous around corners. Underlay must be lapped 75 mm minimum at horizontal joints and 150 mm minimum over studs at vertical joints. Generic rigid wall underlay materials must be installed in accordance with NZBC Acceptable Solution E2/AS1 and be overlaid with a flexible wall underlay. Proprietary systems must be installed in accordance with the manufacturer's instructions. Particular attention must be paid to the installation of the wall underlay and sill and jamb tapes around window and door openings to ensure a continuous seal is achieved and all exposed wall framing in the opening is protected.

Readers are advised to check the validity of this Appraisal by referring to the Valid Appraisals listing on the BRANZ website, or by contacting BRANZ.

Vertibat Cavity Batten Installation (to Dwangs)

17.2 Vertibat cavity battens must be installed horizontally over the wall underlay to the wall framing (dwangs) at maximum 480 mm centres. (Refer to Paragraph 9.5 for the maximum dwang spacings for paint finished cedar weatherboards.) The battens must be installed with the top edge sloping away from the wall underlay towards the back of the weatherboards. The cavity battens must be fixed in place with 40 x 2.5 mm flat head hot-dipped galvanised nails or 50 x 2.87 mm hot-dipped galvanised gun nails (for 20 mm thick battens), or 60 x 2.8 mm flat head hot-dipped galvanised nails or 60 x 2.87 mm hot-dipped galvanised gun nails (for 40 mm thick battens) to temporarily fix the battens in place prior to installation of the cladding.

Vertibat Cavity Batten Installation (to Studs)

17.3 40 or 45 mm thick Vertibat cavity battens must be installed horizontally over the wall underlay to the wall framing (studs) at maximum 480 mm centres. (Refer to Paragraph 9.5 for the maximum Vertibat cavity batten spacings for paint finished cedar weatherboards.) The battens must be installed with the top edge sloping away from the wall underlay towards the back of the weatherboards. The cavity battens must be fixed in place with one 12 gauge x 65 mm long Grade 304 or 316 stainless steel screw at each stud crossing (maximum 600 mm centres) for 40 mm thick battens or one 12 gauge x 75 mm long grade 304 or 316 stainless steel screw at each stud crossing for 45 mm thick battens.

Cavibat Cavity Batten Installation

17.4 The Cavibat cavity battens must be installed horizontally over the wall underlay to the wall framing (dwangs) at maximum 480 mm centres. (Refer to Paragraph 9.5 for the maximum Vertibat cavity batten spacings for paint finished cedar weatherboards.) The cavity battens must be fixed in place with 40 x 2.5 mm hot-dip galvanised flat head nails or galvanised or stainless steel finishing brads at 400 mm centres. Refer to BRANZ Appraisal Number 524 (2012) for further information.

VertiLine Vertical Shiplap Weatherboard Cavity System Installation

17.5 Hermpac shiplap weatherboards may be cut on site by power or hand saw. Holes and cut-outs may be formed by using a hole saw.

17.6 Hermpac shiplap weatherboards must be dry prior to installation.

17.7 Before stain finished Hermpac shiplap weatherboards are installed, the back, face and edges must be sealed with an exterior grade oil-based penetrating stain. During installation, cut ends must be sealed with an exterior grade oil-based penetrating stain.

17.8 Before paint finished Hermpac shiplap weatherboards are installed, the back, face and edges must be primed with an exterior grade primer. During the installation of paint finished Hermpac shiplap weatherboards, cut ends must be sealed with two coats of an exterior grade alkyd timber primer.

17.9 Before the weatherboards are installed, the corner detail must be prepared to suit the selected option, e.g. external box corner, external corner moulding etc. The necessary flashings must be installed before commencing weatherboard fixing and the cavity closure must be installed continuously around the bottom of the cavity.

17.10 Hermpac shiplap weatherboards must be installed starting at the corner of the wall section being clad. The first weatherboard must be installed plumb to assist with the installation of subsequent weatherboards. The weatherboards must overhang the bottom plate by a minimum of 50 mm. The weatherboards should be installed with the lap facing away from the prevailing winds.

17.11 Immediately prior to installing the weatherboards over the internal and external corner flashings, a continuous bead of sealant must be applied to the face of the flashing along the fixing line.

17.12 Hermpac shiplap weatherboards must be overlapped a minimum of 25 mm with an expansion gap of 2 mm at the overlap. In NZS 3604 Wind Zones up to and including Very High, it is recommended that the top of the weatherboard lap is restrained using the Hermpac clinch nail at every cavity batten. Hermpac clinch nails must be used to restrain the top of the weatherboard lap in the Extra High Wind Zone and specific design wind pressures up to a maximum design differential ultimate limit state (ULS) of 2.5 kPa.

Readers are advised to check the validity of this Appraisal by referring to the Valid Appraisals listing on the BRANZ website, or by contacting BRANZ.

17.13 Hermpac shiplap weatherboards must be pre-drilled with a hole slightly smaller than that of the nail. Fix each weatherboard with one nail per board at every cavity batten. Fixing of stain finished weatherboards must be carried out using silicon bronze or Grade 304 or 316 stainless steel annular grooved Hermpac Crown Head, Rose Head or Flat Head nails. Fixing of paint finished weatherboards must be carried out using Grade 316 stainless steel annular grooved jolt head nails. The nail shank must be minimum 3.15 mm diameter (2.8 mm diameter for stain finished weatherboards fixed to 40 or 45 mm Vertibat battens fixed to studs only) and the length must allow minimum 30 mm penetration of the wall frame (for Vertibat and Cavibat battens fixed to dwangs) and minimum 30 mm penetration of the batten (for 40 or 45 mm thick Vertibat battens fixed to studs only). The fixing must be located 30-35 mm in from the weatherboard lap and a minimum of 32 mm from the end of the board. and Crown Head, Rose Head or Flat Head nails must finish flush onto the surface of the weatherboard, not into or below the surface. The nail must be installed with a slight upslope to reduce capillary draw. Jolt head nails must be punched a maximum of 2 mm beneath the surface of the board.

17.14 Fix weatherboards in full lengths where possible. Where joints are unavoidable, scarf the weatherboard at 30° over a cavity batten and fix with one fixing through the overlapping board.

Aluminium Joinery Installation

17.15 Aluminium joinery and associated head flashings must be installed by the building contractor in accordance with the Technical Literature. A 7.5 - 10 mm nominal gap must be left between the joinery reveal and the wall framing so a PEF rod and air seal can be installed after the joinery has been secured in place.

Finishing

17.16 The stain manufacturer's instructions must be followed at all times for application of the stain finish.

17.17 To prevent swelling of the weatherboard around punched fixings, the fixing must be filled immediately, or alternatively the weatherboard and the head of the fixing must be primed with a premium alkyd timber primer.

17.18 The paint coating manufacturer's instructions must be followed at all times for the application of the paint finish. Hermpac shiplap weatherboards must be painted as soon as practicable following fixing and must be clean and dry before commencing. If the Hermpac shiplap weatherboards are exposed to the weather for more than 2 months they must be reprimed with one coat of primer prior to the application of the finishing coats. Allow the recommended drying time between coats and follow the temperature limitations for application.

Inspection

17.19 The Technical Literature must be referred to during the inspection of VertiLine Cavity System installations.

Health and Safety

18.1 Cutting of Hermpac shiplap weatherboards must be carried out in well ventilated areas and dust masks, eye and hearing protection must be worn.

18.2 Safe use and handling procedures for the components that make up the VertiLine Vertical Shiplap Weatherboard Cavity System are provided in the relevant manufacturer's Technical Literature.

Readers are advised to check the validity of this Appraisal by referring to the Valid Appraisals listing on the BRANZ website, or by contacting BRANZ.

Basis of Appraisal

The following is a summary of the technical investigations carried out:

Tests

19.1 The following testing has been completed by BRANZ:

- BRANZ expert opinion on NZBC E2 code compliance for the VertiLine Vertical Shiplap Weatherboard Cavity System is based on testing and evaluation of all details within the scope and as stated within this Appraisal. The VertiLine Vertical Shiplap Weatherboard Cavity System was tested to NZBC E2/VM1. The testing assessed the performance of the Vertibat and Cavibat cavity battens, foundation detail, window head, jamb and sill details, meter box head, jamb and sill details, vertical joints, internal and external corners and balustrade to wall junction. In addition to the weathertightness test, the details contained within the Technical Literature have been reviewed, and an opinion has been given by BRANZ technical experts that the system will meet the performance levels of NZBC Acceptable Solution E2/AS1 for cavity-based weatherboard claddings.
- Fastener pull through testing. BRANZ determined design wind suction pressures, and by comparing these pressures with AS/NZS 1170 pressure coefficients, the fixing requirements were determined for timber framed walls.

Other Investigations

20.1 Structural and durability opinions have been provided by BRANZ technical experts.

20.2 The performance of timber weatherboard wall cladding products in New Zealand has been considered, including the structural and durability performance, and non-hazardous nature.

20.3 Site visits have been carried out by BRANZ to assess the practicability of installation.

20.4 The Technical Literature for the VertiLine Vertical Shiplap Weatherboard Cavity System has been examined by BRANZ and found to be satisfactory.

Quality

21.1 The manufacture of Hermpac shiplap weatherboards has been examined by BRANZ, including methods adopted for quality control. Details regarding the quality and composition of the materials used were obtained by BRANZ and found to be satisfactory.

21.2 The quality of materials, components and accessories supplied by Herman Pacific Limited is the responsibility of Herman Pacific Limited.

21.3 Quality of installation on site of components and accessories supplied by Herman Pacific Limited and the building contractor is the responsibility of the installer.

21.4 Designers are responsible for the building design, and building contractors are responsible for the quality of installation of framing systems and joinery, wall underlays, flashing tapes, air seals, cavity battens and the VertiLine Vertical Shiplap Weatherboard Cavity System in accordance with the instructions of Herman Pacific Limited.

21.5 Building owners are responsible for the maintenance of the VertiLine Vertical Shiplap Weatherboard Cavity System in accordance with the instructions of Herman Pacific Limited.

Readers are advised to check the validity of this Appraisal by referring to the Valid Appraisals listing on the BRANZ website, or by contacting BRANZ.

Sources of Information

- AS/NZS 1170: 2002 Structural design actions.
- AS/NZS 4534:2006 Zinc and zinc/aluminium-alloy coatings on steel wire.
- NZS 3602:2003 Timber and wood-based products for use in building.
- NZS 3603:1993 Timber Structures Standard.
- NZS 3604:2011 Timber-framed buildings.
- NZS 3617:1979 Specification for profiles of weatherboards, fascia boards and flooring.
- NZS 4211:2008 Specification for performance of windows.
- BRANZ Bulletin Number 411, April 2001, Recommended Timber Cladding Profiles.
- Acceptable Solutions and Verification Methods for New Zealand Building Code External Moisture Clause E2, Ministry of Business, Innovation and Employment, Third Edition July 2005 [Amendment 7, 01 January 2017).
- Ministry of Business, Innovation and Employment Record of amendments - Acceptable Solutions, Verification Methods and handbooks.
- The Building Regulations 1992.

Amendments

Amendment No. 1, dated 13 October 2017.

This Appraisal has been amended to update the system name, to include Dura-Larch and Ashin-Dura as alternative timber types for selected Hermpac Shiplap weatherboards, and to include paint as an alternative finish.

Readers are advised to check the validity of this Appraisal by referring to the Valid Appraisals listing on the BRANZ website, or by contacting BRANZ.

BRANZ

In the opinion of BRANZ, the Vertiline Vertical Shiplap Weatherboard Cavity System is fit for purpose and will comply with the Building Code to the extent specified in this Appraisal provided it is used, designed, installed and maintained as set out in this Appraisal.

The Appraisal is issued only to Herman Pacific Limited, and is valid until further notice, subject to the Conditions of Appraisal.

Conditions of Appraisal

1. This Appraisal:
   a) relates only to the product as described herein;
   b) must be read, considered and used in full together with the Technical Literature;
   c) does not address any Legislation, Regulations, Codes or Standards, not specifically named herein;
   d) is copyright of BRANZ.
2. Herman Pacific Limited:
   a) continues to have the product reviewed by BRANZ;
   b) shall notify BRANZ of any changes in product specification or quality assurance measures prior to the product being marketed;
   c) abides by the BRANZ Appraisals Services Terms and Conditions.
   d) Warrants that the product and the manufacturing process for the product are maintained at or above the standards, levels and quality assessed and found satisfactory by BRANZ pursuant to BRANZ's Appraisal of the product.
3. BRANZ makes no representation or warranty as to:
   a) the nature of individual examples of, batches of, or individual installations of the product, including methods and workmanship;
   b) the presence or absence of any patent or similar rights subsisting in the product or any other product;
   c) any guarantee or warranty offered by Herman Pacific Limited.
4. Any reference in this Appraisal to any other publication shall be read as a reference to the version of the publication specified in this Appraisal.
5. BRANZ provides no certification, guarantee, indemnity or warranty, to Herman Pacific Limited or any third party.

For BRANZ

Chelydra Percy
Chief Executive

Date of Issue:
16 September 2014

Readers are advised to check the validity of this Appraisal by referring to the Valid Appraisals listing on the BRANZ website, or by contacting BRANZ.

RECEIVED
27 OCT 2017
BY:

J0037



Picture. 1: Ventilated roof build-up.



Picture. 2: Non-ventilated roof build-up

VAPOZINC©

The innovative woven mesh roof underlay
Permeable
Self-adhesive joining strip

Technical information

Weight per roll:	18kg cover area 42m^2
Width:	1,4 meter
Length per roll:	30 meter
Roll diameter:	0.55 meter
Weight:	approx 0.4kg / m^2
Resistance to tearing:	between 4000 N and 5000 N in accordance to EN 10319 180N
Tensile strength longitudinal:	180 N
Tensile strength transverse:	200 N
Water tightness (head of water):	1195g/m^2 /24h
Water vapor diffusion resistance:	0.02 m in accordance to EN 52615
Water vapor permeability:	5.54g / m^2 .h.mmHg
Temperature range:	-10°C to +80°C
Melting point:	163 °C
Fire rating in accordance to EN 13501	E



VAPOZINC© an innovative roof underlay consisting of a woven mesh with water vapor permeable roof sarking. Any moisture trapped between under construction and roof cladding can drain out safely, offering moisture that entered the building during construction to dry out.

VAPOZINC© can be installed directly over plywood or timber substructures. Substructures as well as roof coverings are permanently protected against corrosion or rotting.

- Easy to install
- Water vapor permeable
- Controls moisture
- Self-adhesive joints
- Fulfills the requirements as roof cover in a stand alone environment in accordance to DIN 4102 and roof pitches less than 20 degrees

VAPOZINC© is available in New Zealand from Euro Metals Ltd • 0800 946 248 • www.eurometals.co.nz

RHEINZINK©

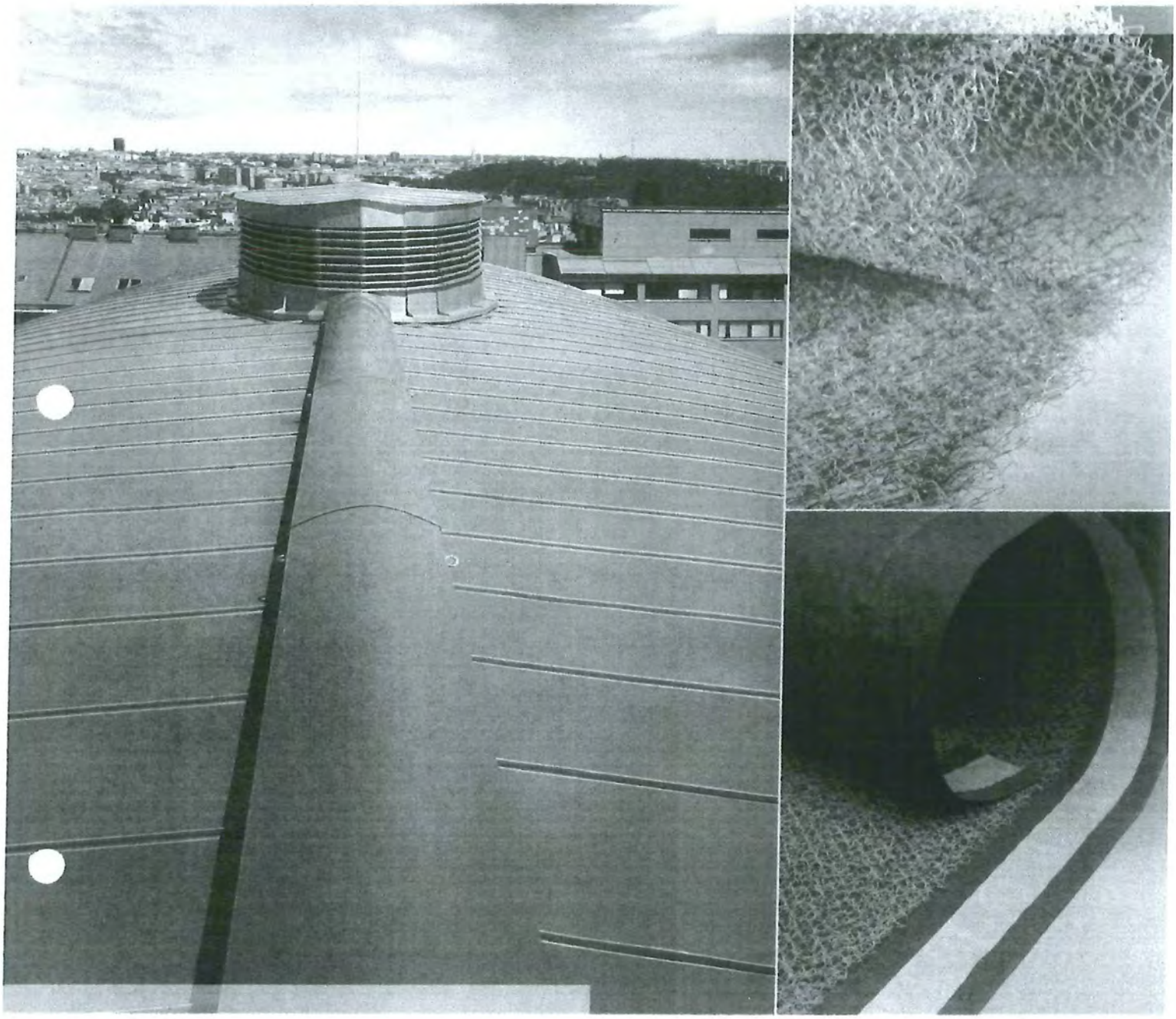

VAPOZINC©

The innovative water vapor permeable roof underlay

J0038

RECEIVED
27 OCT 2017
BY: [illegible]

Metals
13 Omahi Street
PO Box 111
Waikanae 5250
Phone: 04 293 6422
Fax: 04 293 6442
info@eurometals.co.nz

www.eurometals.co.nz

Typical Standing Seam Specification for Rheinzink Roof and Wall Cladding

1. Design

1.1 General
All roof cladding design drawings as well as zinc layout and joint detail drawings should be reviewed by zinc manufacturer prior to start of installation.

2. Materials

2.1 Rheinzink Titanium pre weathered Pro type (pickling process).
Alloy is electrolytic high grade zinc (DIN 1706) with a 99.995% Zn degree of purity and alloying additives of 1% copper and 1% Titanium. Phosphate coatings are not acceptable.

2.2 Finish
Zinc finish shall be Rheinzink pre weathered Plus or Graphite grey for all visible areas.

2.3 Accessories
2.31 Solder
Lead/ tin solder containing 40% tin and 60% lead

2.3.2 Flux
Z-04-S flux is recommended

2.3.3 Sealant
100% pure rubber with neutral cure, non-acid based.
Colour: dark grey or translucent.

2.4 Membrane
Grace underlay Bituthene 3000.

2.5 Underlay
Enkavent (Enkamat) 7210 spacer mat (polyamide separation layer)

2.6 Fixings

2.6.1 Nails
Hot dipped galvanised steel self-tapping screws with large flat head 2.5x19mm to install underflashings and starter strips.

2.6.2 Screws
Stainless steel countersunk, undercut screws. A gauge, 20mm to install fixing clips

2.6.3 Fixing clips
Stainless steel fixed type and sliding type-fixing clips.

2.7 Substructure-Plywood

2.71 Substructure
Roof: Structural Plywood D/D grade min 18mm, A-bond
Purlin spacing: 600mm centres
Wall: Structural Plywood D/D grade min 17mm, A-bond

2.7.2 Substructure-Secondary (to fix plywood sheets)
Wall: Galvanised steel Top Hat section 35mm at 600mm centres
Wall: H3 treated timber battens min 25mm at 600mm centres

2.8 Insulation
With vapour barrier, the vapour barrier has to be installed to the warm side of application, check with Engineer on climate zone requirements.

3. Fabrication

3.1 Temperature
A minimum temperature of 10° Celsius has to be maintained while forming the zinc alloy.

3.2 Forming
The trays should be manufactured from pre-levelled blanks with a roll forming machine. Additional formwork, like rounding, bending and folding can easily be carried out with conventional tools and equipment. The minimum-bending radius is 1.75mm. Sharp instruments for marking and bending should be avoided.

4. Delivery, Storage and Handling

4.1
Zinc coils and sheet should only be delivered to site when work is ready to start.

4.2
Ensure that no water penetrates the coils or stacked sheets during transport and storage. Store materials in try, ventilated rooms.
Should white dust appear on the surface of the material, remove it immediately with a brush and clean water and let dry.

5. Installation

5.1 Installer

The Installer must be approved by supplier of the material before any work is commenced and must be specifically trained and experienced in the application of zinc to have a material warranty issued.
The Subcontractor should provide documentation proof of successfully installed non-ferrous metal installations of similar project size.

5.2

The sequence of installation is from bottom to the top.

5.3

Dimensions of roof trays: Max. length: 17,000mm.
Recommended width: 670mm girth (600mm between seams)

Parapet: Max length: 4000mm

Wall: Max length: 6000mm
Max. width: 570mm girth (500mm between seams)

Panels, trays, copings and flashings shall be fixed in a manner to allow for thermal expansion and contraction of the material.

6. Joints

Use double standing seam technique for roof claddings and angle seam or roll cap system for wall claddings.

All joints – including expansion joints – within the zinc roof system and with materials adjacent to the zinc shall be rain proof.

Joints at penetrations and flashings should be made water tight by means of soldering, welting or double welting.

The minimum required overlap depends on the wall pitch: refer to zinc manufacturers recommendations.

Fasten every fixing clip with SS screws
Use sliding clips if the trays are longer than 2000mm.
The distance between fixing clips should not exceed 330mm
Refer to zinc manufacturers recommendations regarding the position of sliding/fixed clips and amount of clips required.

RECEIVED
27 OCT 2017
BY

30039

RHEINZINK®



SUSTAINABLE BUILDING WITH RHEINZINK®

Aspects for an intelligent material selection.

RHEINZINK

Further reading:

www.designing-nature.de (available in German only)
www.rheinzink.com

Prof. Dr.-Ing. habil. Heinz Hullmann,
Prof. Dr.-Ing. habil. Wolfgang Willkomm:
"Recycling von Kupfer und Zink"
(Recycling Copper and Zinc, available in German only),
Offprint from "Metall" 10/2001

International Zinc Association, Europe
www.zincworld.org
"Zink ist überall" (Zinc is Everywhere,
available in German only)
"Die Zinkindustrie bekennt sich ..." (The Zinc Industry
Shows its Cards, available in German only)

DIBU, Deutsches Institut für Bauen und Umwelt
(German Institute for Building and Environment),
Königswinter, Germany
(formerly Arbeitsgemeinschaft Umweltverträgliche
Bauprodukte e.V. (Association for Environmentally
Proofed Building Products)
"AUB product declaration RHEINZINK®"
"AUB – ecological balance of RHEINZINK®"

Initiative Zink (Zinc Initiative) of the Wirtschafts-
Vereinigung Metalle e.V. (Economic Metal Association),
Berlin, Germany

Initiative ProMetalldach (Pro Metal Roof Initiative)
of the Wirtschafts-Vereinigung Metalle e.V. (Economic
Metal Association), Berlin, Germany

Deutsches Institut für Nachhaltiges Bauen e.V (German
Institute for Sustainable Building), Stuttgart, Germany

RHEINZINK® books and brochures

Would you like to find out more? We will be happy to send you detailed information on sustainable building with RHEINZINK®!

RHEINZINK

RHEINZINK U.K., Cedar House, Cedar Lane, Frimley, Camberley, Surrey GU16 7HZ, UK
Tel. +44(0)1276-686725, Fax: +44(0)1276-64480, E-Mail: info@rheinzink.co.uk, www.rheinzink.co.uk

1051GPAZ.GB-0000-05-08

Sustainability – the word has spread. It describes the ability of using a natural system to the fullest. This can refer to dealing with the environment and natural resources in a responsible manner. It can also describe a company's reliability that sets it apart from others.

Definitely after the latest climate report, people all over the world focus strongly on climate protection and sustainability. In the near future, also in Germany, laws will be coming into effect to regulate the contact between human beings and nature in the right manner.

Especially in the field of sustainable construction there is a set of new challenges which will affect architects, planners, and constructors. Soon, when planning a building, the basics of sustainable construction will have to be respected: For example, there will be an energy certificate for the building that will make it possible to calculate and analyze a building's energy consumption. A „sustainability certificate" will document the quality of a building and categorize it according to sustainability criteria such as ecological and economic aspects, socio-cultural and functional as well as technical aspects, and it will determine the influence the building and its materials have on the environment.

Terms like ecological construction, low energy buildings, CO_2 discussions, renovation of old buildings and energy efficiency are becoming more important for constructors and planners. This has the effect that the use of sustainable materials will inevitably become more important. Ecological home construction will advance to becoming the standard in years to come.

With RHEINZINK® the coming standards will be easily met. The natural material for roof, façade, and roof drainage systems has been uniting the sum of all positive ecological aspects for over 40 years. The outstanding ecological balance is fully documented in the AUB* product declaration according to DIN ISO 14025, type III.

RHEINZINK®-products have a realistic durability of more than 75 years** and do not need any maintenance or care during that time. The aesthetic blue-grey patina created by natural weathering protects the material for generations and with time, scratches simply disappear.

Especially the comparatively low CO_2 emission during manufacturing and thus a low amount of energy needed in production, makes RHEINZINK® the lightweight option among metals for roofing and claddings. RHEINZINK® is 100% recyclable and compared to coated or other compound materials, it is, immediately and without needing further preparation whatsoever, recyclable again right away. This only requires about 5 % of the primary energy demand.

RHEINZINK® – a sustainable material:

- Sustainability documented according to DIN ISO 14025, Type III
- 100% recyclable
- Recycling quota of pure zinc of 98%
- Low primary energy demand
- Low secondary energy demand (recycling)
- Comparatively low CO_2 emission among construction metals
- Lowest global warming potential
- High scrap metal value
- Over 40 years of experience
- Natural surface with self-healing effect (patina)
- Longevity and maintenance-free
- Rainwater drainage possible
- Zinc is an indispensable trace element
- Social responsibility „MADE IN GERMANY"
- Applicable in the multiplicity of architecture

* AUB, soon to be DIBU, German Institute for Construction and Environment

** Study TNO, Breda, Netherlands

The discussion on climate change shows that, also in Germany, the topic „sustainable construction" will have to gain importance. After all, we are responsible for about 20 % of the CO_2 emissions in the field of construction and living. It is therefore worthwhile to take a closer look and to preserve our resources, save energy, and avoid emissions.

In this context, the use of the ecological material zinc also becomes more important. It is gained from zinc ore through the use of energy in an electrolysis technique. The resources known to us today of 3,400 million tons provide a zinc stock for a time period of roughly 700 years without taking the recycling material into account. Refined zinc is also the source material for the high-quality RHEINZINK® alloy. In melting, casting or rolling RHEINZINK®, comparably little energy is needed due to zinc's low melting point. The result: The name RHEINZINK® stands for the most economical primary energy concentration in the field of construction metals.

And also here RHEINZINK® is scoring in the field of climate protection. Based on a square meter of RHEINZINK®-standing seam the primary energy concentration for RHEINZINK® compared to other roofing and cladding materials is three to eight times less. This is another aspect that – even when using a completely independent design – turns this natural material into a real alternative for sustainable construction.

The economical RHEINZINK®-energy balance is maintained within the material cycle also after usage. In order to convert zinc scrap back into refined zinc, only 5 % of the energy needed to manufacture refined zinc will be needed.

RHEINZINK® – naturally ecological.
The ecological performance capacity of a material is evaluated in a so-called eco-balance. Here, stock and energy flows as well as potential effects on the environment in the course of the entire life cycle are evaluated. The result for RHEINZINK® is clear: The natural material's contribution to the so-called impact categories (global warming potential, ozone depletion potential, acidification potential, overfertilization potential and summer smog potential) is also the lowest among all metals used for construction. A result that is reported in detail in the „Documentation of the Environment Profiles of Metal Sheets" (PE International GmbH, Leinfelden-Echterdingen) and that is also documented by the German Federal Environment Agency.

The RHEINZINK® energy data show:

- Primary energy concentration 187.5 MJ/m² (standing seam cover, metal thickness 0.70 mm)
- CO_2 concentration: 3478 g/m² (standing seam cover, metal thickness 0.70 mm)
- Recycling energy demand: 5 % of the demand for zinc manufacturing from ore
- Resources for over 700 years
- Climate-protecting metal
- Climate protection in action for over 40 years

When referring to primary energy, we are talking about energy that is naturally available in its existing energy forms or from energy sources in Germany. Primary energy sources are for example fossil combustibles (carbon, natural gas, crude oil), nuclear energy, but also renewable energies like the sun, wind, and hydraulic power. When estimating the primary energy concentration of a product, not only the manufacturing process of the material is being classified, but also the energy expenses that arise from transportation as well as how many additives and lubricants are needed during the production process.

* Source: PE International GmbH, Leinfelden-Echterdingen, Germany and the German Federal Environment Agency (UBA)

In a time where handling resources in a responsible manner becomes ever more important, deciding on the adequate material in the field of future oriented and sustainable construction is not an easy task. New regulations worldwide have called the attention to material recycling after usage.

Until today, materials are used for roof and façade covers and roof drainage which consume a high amount of energy during production and which can only be re-used for secondary means (downcycling), or which cause a lot of expenses during disposal. Due to the described current conditions, a general trend towards natural materials is already foreseeable.

The material RHEINZINK® has been able to claim the title „sustainable" from production all the way to its permanent application for over 40 years. RHEINZINK combines economic and ecological preservation of resources par excellence because here, real recycling has been practiced since the very beginning: Zinc scrap material can be made available again after its usage thanks to a closed-loop material cycle, and it can be processed again and again.

(See chart below) Zinc is 100% recyclable. Today, for construction zinc, a real recycling quota of 98 % is achieved. In practice this means that each RHEINZINK®-product today already consists to 30 % of secondary material. An entire meter of a three meter long RHEINZINK®-roof gutter has theoretically been in use already. An impressive result that is hard to be outdone because of the extremely long life cycle of RHEINZINK®-products. RHEINZINK®-products live up to 75 years or even longer maintenance-free.

The RHEINZINK® energy data sheet

- 100% recyclable without further production steps such as decoating or separating from compound materials
- 98% real recycling quota with zinc
- A RHEINZINK® roof gutter consists of at least 30% recyclable material
- Real recycling instead of downcycling

Manufacturing and recycling of zinc

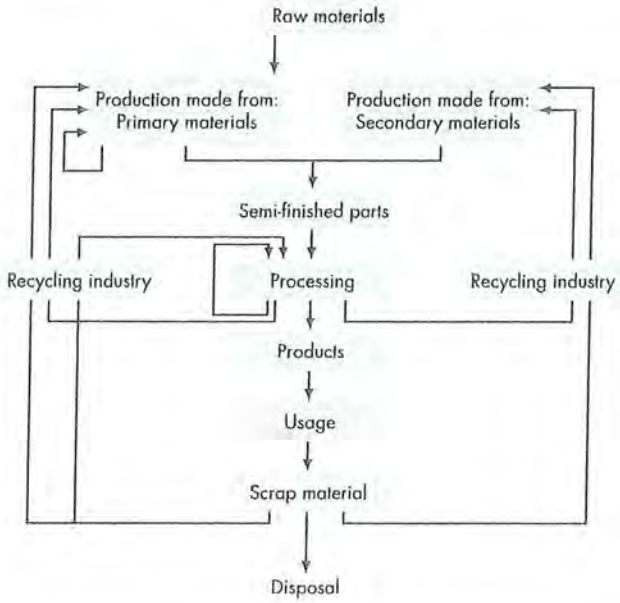

According to the German water management authorities, rainwater that needs to be drained from hard-surfaced and thus sealed plot areas should be allowed to seep into the ground at another area of the plot to join the groundwater. The aim of this requirement is to ensure the drinking water supply and reduce flooding. From a quality management point of view, it requires special attention.

Over the past years, various German federal states have dealt in detail with the topic of rainwater seepage – and with good cause: Before joining the groundwater through the earth by means of troughs, infiltration ditches or soakaway pits, the rainwater may come into contact with roofs, roof drainage systems, and the materials used for sealing the surface. As a result, roofs and roof drainage systems that may potentially harm the quality of ground water became subjects to special approval procedures. In this context, zinc, a natural material, was wrongly included in this measure by the German water management authorities.

Over the past ten years, various independent institutes have conducted countless international research projects to investigate the potential effects of zinc in rainwater. The unanimous result: Zinc in rainwater is not toxic. As long as the relevant technical rules and specifications are met, the seepage of rainwater by means of soakaway pits and drainage troughs is completely harmless. For example, according to recent publications of the German Federal Environment Agency (UBA), only 2% of all zinc that is added to the environment originate in zinc-coated building surfaces. Of this, less than 0.5% end up in the ground – a portion so small that it is completely harmless. The precautionary principle that various German states have been practicing is therefore no longer maintainable with regard to zinc.

As a result, the German water management authorities are updating their regulations. Baden-Württemberg has already acted – here, rainwater drainage by means of troughs no longer requires approval. Bavaria has announced an updated version of its rainwater exemption regulation for early this year. More federal states will soon follow these examples.

Zinc is one of life's components.
A natural component of our environment, zinc is the second most important trace element after iron. Since our bodies are not able to produce micronutrients, we have to ingest them with our daily food. Up until now, the allowed portion of zinc in drinking water was up to 5 mg per liter. However, due to its harmlessness, the new regulations will no longer impose such limits.

And so is RHEINZINK®.
For more than 150 years, zinc has traditionally been used to cover roofs and façades and to drain roofs. For decades, it has been playing an important role in international architecture in the form of the natural material RHEINZINK®. RHEINZINK® is of stable value, maintenance-free, and has been certified as an environmentally friendly building product. Due to atmospheric influences, a protective zinc patina (zinc carbonate) forms on the surface of the material. It is UV resistant and guarantees longevity and a timeless beauty. Over time, the atmospheric influences wash away metal ions. However, at a corrosion rate of only 0.3 to 0.4 µm per year, the concentration of zinc in the water running off the roof is similar to that in drinking water.

Natural rainwater seepage with RHEINZINK®

- No toxic substances
- No pathogenic substances
- Proven harmlessness
- The essential trace element zinc is bound in the ground
- Research has invalidated the authorities' precautionary principle
- Supporting the natural water balance through rainwater seepage improves the microclimate and protects the environment

Roofs, façade covers, and roof drainage systems – for more than 40 years, RHEINZINK has been known as the material of choice for safe and ecological building protection and as Europe's best-selling roof drainage system. Thanks to its diverse product portfolio, RHEINZINK can be used in almost any area and architectural style. In addition to its traditional technical material characteristics (malleability, enduring stability, ability to be worked on with tools on the building site, solderability), the material has a number of protective properties:

RHEINZINK® is non-combustible.
RHEINZINK®-Roof Coverings avert the spreading of fire and sparks, also in combination with various types of separating layers.

RHEINZINK® averts lightning strokes.
According to DIN EN 62305-3 RHEINZINK® on a roof and façade is an integral part of the external lightning protection. The natural, uncoated metal surface intercepts the lightning, diverting it across surface areas and locking joints together with the grounding line. Lightning protection in form of ungainly antennas and fanned-out, disfiguring deflectors is no longer needed.

RHEINZINK® averts electric smog.
The effect that electromagnetic radiation has on human beings is a highly-discussed and oftentimes controversial topic. In this light, the International Gesellschaft für Elektrosmogforschung (International Society for Electric Smog Research) has extensively tested the shielding characteristics of the RHEINZINK® material. The biological measurements taken on human beings confirm the technical measurements. They show that RHEINZINK®-covered surfaces, especially when grounded, have a harmonizing effect on heart, circulation, and nervous system, and increase relaxation of the human organism. 99.93% of electromagnetic radiation are deflected.

Technical properties of the RHEINZINK® material

- Superior material quality
- Quality tested by TÜV (German Association for Technical Inspection)
- Protection of valuable buildings
- Integrated lightning protection
- Health-promoting
- Maintenance-free

The sun's energy output which reaches us in only 40 minutes is sufficient to cover the energy needs of all of mankind for one year. With the RHEINZINK®-solar solutions, we have succeeded in making the most of Nature's gift in a highly aesthetic way.

The integrated, sophisticated, and award-winning solar solutions RHEINZINK®-Solar PV and RHEINZINK®-SolarThermie enable a multifunctional use of roofs and façades. A one-step mounting technology that has proven itself for decades is all it takes to obtain an aesthetic building protection that uses the sun's free energy from day one.

RHEINZINK®-Solar PV – Strikingly unobtrusive.
The abbreviation PV stands for photovoltaic, the direct transformation of rays of light into electric energy. As the sun does not shine everywhere with the same intensity, the roof- or façade-integrated RHEINZINK®-PV cells can be used as needed: on the entire roof or only on parts. RHEINZINK®-Solar PV does not need to penetrate the roof, nor does it need additional mounting elements. The PV elements are delivered fixed to the RHEINZINK®-carrier elements. The highly effective Triple Junction Technology enables usage even in dim light or with little direct sun. In addition, the system is extremely light-weight – it is the perfect solution for practically any roof.

RHEINZINK®-SolarThermie – Strikingly invisible.
SolarThermie, or solar thermal, stands for the transformation of solar energy into directly usable heat. This technology seems made for RHEINZINK®, given the excellent thermal conduction properties of this natural material: In contrast with glazed collectors that collect the direct sunlight and convert it into energy, unglazed collectors also use an environmental absorber. This means that they also take in heat that does not result from direct solar radiation. The unglazed zinc collectors – together with a heat pump – are perfectly suited for use in geothermal energy facilities. This combination increases the facility's output considerably. Furthermore, the zinc collector can be used to preheat industrial water by up to 30% or, for example, to heat the water of a swimming pool.

By employing a RHEINZINK®-solar solution, you benefit the environment in two ways: You have opted for a natural material with an exemplary ecological balance and you make the most of the sun's free energy.

What are you waiting for? Check if your country authorities support future-oriented energy solutions today. With the help of a compensation guaranty by law for solar power, and in view of the roof's longevity, the investment in a solar roof will repay itself in no time.

The advantages of the roof-integrated RHEINZINK® solar solutions:

- Multifunctional surface area usage – weather protection and energy supply
- A single mounting step leads to an aesthetic, integrated solar solution
- Climate protection through innovative solar technology using sustainable material
- Architecturally valuable and CO_2 efficient in two ways

„Sustainable development means satisfying the needs of the present generation without compromising the ability of future generations to satisfy theirs." This phrase, coined in 1987 by Norwegian politician Gro Harlem Brundtland during her tenure as chairwoman of the World Commission on Environment and Development of the United Nations, stimulated an increasing international preoccupation with sustainability. From the beginning, this legendary sentence was not only relevant from an ecological point of view. It stood and continues to stand for the responsible use of resources. No company today can afford to ignore theses challenges of the future.

RHEINZINK conserves value.
For more than 40 years, we have been living up to this responsibility and see ourselves as conscientious advocates of sustainability. The careful use of natural, material, financial, and human resources is and will remain an integral part of our corporate philosophy. Our loyalty to Germany as a business location guarantees much more than just the valuable label "MADE IN GERMANY". At RHEINZINK, customer interaction has always been our focus. Only in cooperating closely with our customers will we be able to persist, improve, and meet the considerable challenges of the future. In this regard, our employees are our crucial asset. Only when working in a secure and harmonious environment will they be able to fulfill their tasks to the highest standards of quality.

Loyal employees.
We remunerate our employees within the framework of the German tariff system and according to the agreements for the German metal and electrical industry. With the tariff system, each employee receives the pay he or she is entitled to. A comprehensive social environment takes each employee's personal situation into account as much as possible and offers numerous possibilities of finding the ideal arrangement between job requirements and family life. Our employees are happy with RHEINZINK – and this shows in their great personal commitment and minimal labor turnover.

Loyal company.
We value fair partnerships with our customers and suppliers and strive to develop lasting business relationships. We maintain a personal contact with trade, the crafts, architects, and planners. Our comprehensive service is one of the central reasons for the global success of RHEINZINK's roof, façade, roof drainage, and solar products. If you should ever have reason to complain, we will do our best to find a viable solution immediately – we are only human after all.

RHEINZINK® –
Quality made in Germany.
We see our loyalty to Germany as a business location as another contribution to sustainability. For more than 40 years, we have stood by our production site in Datteln/Westphalia on the edge of the Ruhr area. Our regional service is carried out close to our customers – at seven locations in Germany. Branches and subsidiaries in more than 30 countries ensure that our products are delivered according to country-specific regulations and technical standards as well with the characteristics and specifications customary to the region. We speak our customer's language, manufacture according to the customer's wishes and offer customized service.

The corporate culture of RHEINZINK:

- Social and fair environment for our employees
- Lasting relationships with customers and suppliers
- Social engagement and consideration of the local economic situation
- Loyalty to business locations
- We speak our customer's language

Certificate of Approval

Environmental Profiles

RHEINZINK GmbH & Co. KG

Bahnhofstr. 90, 45711 Datteln, Germany

Has complied with the requirements identified in the

Scheme Document SD028

And is authorised to use the BRE Global Mark on publications related to the Environmental Profiles of the following products;

RHEINZINK® Titanium Zinc Coils & Sheets

Incorporating PATINA LINE: RHEINZINK-prePATINA bright rolled, blue-grey & graphite grey

See appendices a – l calculated to the 2008 BRE Environmental Profiles Methodology for further details

for and on behalf of BRE Global

Emma Baker

Certificate No: ENP 453

Issue Number: 2

Date of Issue: 18th February 2013

Expiry Date: 15th March 2015

BRE Global

BRE Global Limited, Watford, WD25 9XX T: +44 (0)1923 664100 F: +44 (0)1923 664910 W: www.greenbooklive.com

This certificate remains the property of BRE Global Ltd and is issued subject to terms and conditions. It is maintained and held in force through annual review and verification. To check the validity of this certificate, please visit www.greenbooklive.com or contact us.

CRADLE TO CRADLE

PRODUCTS

INNOVATION

INSTITUTE

LICENSED MARKS:

Cradle to Cradle Certified^{CM} Basic

THE LICENSED MARKS IDENTIFIED ABOVE MAY BE LICENSED TO:

RHEINZINK®

FOR THE BELOW LISTED CERTIFIED PRODUCTS ASSOCIATED WITH THE NAME:

RHEINZINK-prePATINA® Roof and Façade

Only the following products are considered Certified Product(s) within the scope of this certification and the associated Trademark License Agreement:

RHEINZINK-prePATINA® Roof and Façade

Cradle to Cradle Products Innovation Institute

ISSUE DATE
17 March 2013

CERTIFICATION #
0793

EXPIRATION DATE
16 March 2014

Assessor: Michael Braungart, Environmental Protection Encouragement Agency

EPEA

Certified under Version 2.1.1 of the Cradle to Cradle Certified^{CM} Product Standard
Use of Licensed Marks is subject to terms and conditions of the C2CPII Trademark License Agreement and Trademark Use Guidelines.
Cradle to Cradle Certified^{CM} is a certification mark licensed by the Cradle to Cradle Products Innovation Institute

ENVIRONMENTAL PRODUCT DECLARATION

as per ISO 14025 and EN 15804

Owner of the Declaration	**RHEINZINK GmbH & Co. KG**
Programme holder	Institut Bauen und Umwelt e.V. (IBU)
Publisher	Institut Bauen und Umwelt e.V. (IBU)
Declaration number	EPD-RHE-2012121-E
Issue date	28.12.2012
Valid to	27.12.2017

RHEINZINK-prePATINA® blue-grey and graphite-grey

RHEINZINK GmbH & Co. KG

www.bau-umwelt.com / https://epd-online.com

Institut Bauen
und Umwelt e.V.

PATINA

PATINA LINE

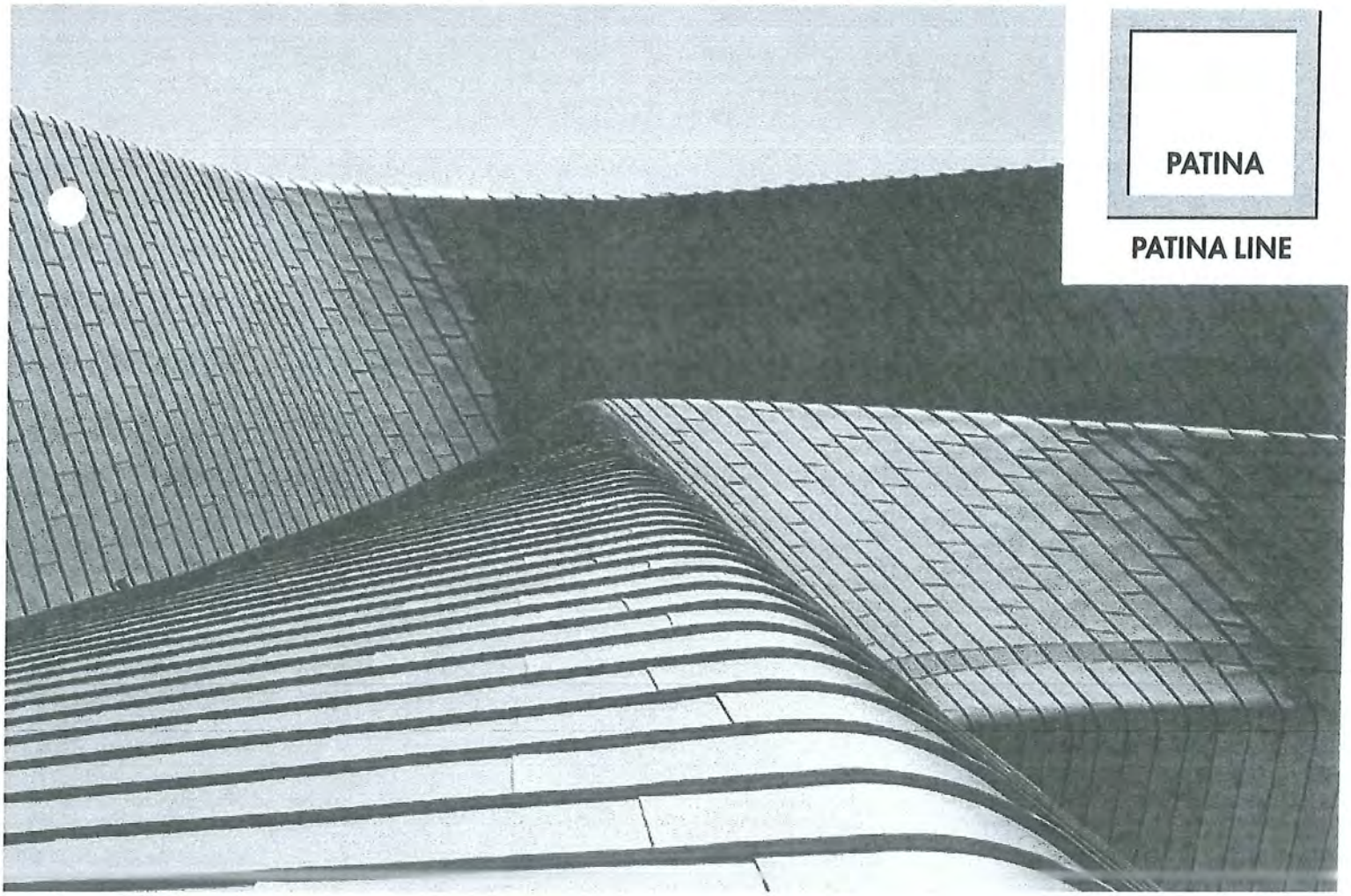

RHEINZINK®

1. General Information

RHEINZINK GmbH & Co. KG

Programme holder
IBU - Institut Bauen und Umwelt e.V.
Rheinufer 108
D-53639 Königswinter

Declaration number
EPD-RHE-2012121-E

This Declaration is based on the Product Category Rules:
Building metals, 07-2012
(PCR tested and approved by the independent expert committee [SVA])

Issue date
28.12.2012

Valid to
27.12.2017

Prof. Dr.-Ing. Horst J. Bossenmayer
(President of Institut Bauen und Umwelt e.V.)

Prof. Dr.-Ing. Hans-Wolf Reinhardt
(Chairman of SVA)

RHEINZINK-prePatina® blue-grey and graphite-grey

Owner of the Declaration
RHEINZINK GmbH & Co. KG
Bahnhofstraße 90
45711 Datteln

Declared product / Declared unit
RHEINZINK®-prePATINA blue-grey and graphite-grey

Scope:
The **Life Cycle Assessment (LCA)** was carried out according to DIN ISO 14040 et sqq. Specific data from the company RHEINZINK in Datteln, Germany, and from the data base "GaBi 5" were used. The LCA was carried out for the manufacturing phase of the products, taking into account all background data such as raw material production and transports ("cradle to gate"). The use phase of the titanium zinc sheets is divided into several application areas: roofing applications, roof drainage and facade claddings. The treatment for the titanium zinc sheets was modeled in re-melting furnaces for the end of life phase. The thereby resulting credit of extracted zinc is counted as replacement for primary zinc. The owner of the declaration shall be liable for the underlying information and evidence.

Verification

The CEN Norm EN 15804 serves as the core PCR

Independent verification of the declaration and data according to ISO 14025

☐ internally ☒ externally

Dr.-Ing. Wolfram Mersiowsky
(Independent tester appointed by SVA)

2. Product

2.1 Product description

The basis of the RHEINZINK® alloy is electrolytic high-grade fine zinc in accordance with DIN EN 1179, with a 99.995 % degree of purity. Added to this are small amounts of titanium and copper based on EN 988. In addition to other factors, the alloy composition is not only of importance for the technological material properties of RHEINZINK®, but also for the colour of its patina.

2.2 Application

• Titanium zinc sheets, strips and profiles for roofing and facade cladding

• Roof drainage systems (roof gutters, pipes and accessories)

2.3 Technical Data

The following table gives conversion data from product surface mass per unit area for the relevant product systems.

System	Area of Application	Thickness of metal	Weigh per m²
Double-standing seam	Roof	0,70	5,6 kg/m²
Roll-cap System	Roof	0,70	5,8 kg/m²
Square tiles	Roof	0,70	7,7 kg/m²
Gutter	Roofdrainage	0,70	1,7 kg/m
Downpipe	Roofdrainage	0,70	1,6 kg/m
Angle-standing seam	Façade cladding	0,70	5,7 kg/m²
Angle-standing seam	Façade cladding	0,80	6,6 kg/m²
Flat-lock tiles	Façade cladding	0,70	7 kg/m²
Reveal panel	Façade cladding	1,00	9,8 kg/m²
Horizontal panel	Façade cladding	1,00	9,8 kg/m²
Shipboard panel	Façade cladding	1,00	10,4 kg/m²

Technological Data

Name	Testing standard	Value	Unit
Coefficient of thermal expansion	*	22	$10^{-6}K^{-1}$
Tensile strength	EN 10002-1	≥ 150	N/mm²
Modulus of elasticity	*	≥ 80.000	N/mm²
Melting point	*	420	°C
Thermal conductivity	*	109	W/(mK)
Density	*	7200	kg/m³

* No testing standard required: Test related to F. Porter, Zinc Handbook, Marcel Dekker Inc., 1991 (ISBN 0824783409)

2.4 Placing on the market / Application rules

EN 988:1996-08,- Zinc and zinc alloys - Specification for rolled flat products for building
EN 506:2000-12,- Roofing products from metal sheet - specification for self-supporting products of copper and zinc sheet
EN 612:2005-04,- Eaves gutters with bead stiffened fronts and rainwater pipes with seamed joints made of metal sheet

2.5 Delivery status

The material RHEINZINK® is delivered in thicknesses from 0,5 – 1,5 mm. The maximum width of strips and sheets for prePATINA blue-grey is 1.000 mm. The max. width for RHEINZINK-prePATINA® graphite-grey is 700 mm. The standard sheets are delivered in 1x2 m and 1x3m, strips are coiled up to 1 to weight. Finished products are delivered to customer specification.

2.6 Base materials / Ancillary materials

Components of RHEINZINK-alloy

- Special-High-Grade zinc 99.995% (Z1 according to DIN EN 1179): ≤ 99,835%
- Copper: 0,08 - 1,0%
- Titanium: 0,07 - 1,2%
- Aluminium: ≤ 0,015%

Auxiliary substances
Lubricant emulsion: 0.08 kg/t zinc
Sulphuric acid: 15 g/kg zinc
Nitric acid: 5 g/kg zinc
Temporary protection: 1 - 3 µm thickness

2.7 Manufacture

Structure of the manufacturing process:
The manufacturing process comprises seven steps:

Pre-alloy: To improve the quality, and for energy-saving reasons, a pre-alloy is produced at 760 °C in an induction crucible stove (meltdown of fine zinc, copper, titanium and aluminium). The pre-alloy blocks produced contain the titanium and copper portions of the subsequent rolled alloy.

Melting: The pre-alloy blocks and fine zinc are melted together in large melting stoves (induction channel stoves) at 500 – 550 °C and mixed together completely with induction currents.

Casting: The final alloy is cooled down below melting point with a closed water circuit in the casting machine, resulting in a solid cast string.

Rolling: There is a cooling distance between casting machine and roller racks. The rolling is done by 5 roller pairs, so-called roller racks. With adequate pressures the material thickness is reduced by up to 50% at each of these roller racks. Simultaneously, the material is cooled and greased using a special emulsion.

Coiling: Subsequently, the readily rolled RHEINZINK® is wound up into coils of 20 tons weight (so-called big-coils). They are still at a temperature of 100 °C and are stored for further cooling.

Stretching and cutting: The tensions developed inside the RHEINZINK® coils during rolling are "stretched-out" by a stretching-bending-straightening-process.

Preweathering: After a cleaning process the material is pickled and rinsed. The complete pickling process is carried out in a continuously operating enclosed production process. Afterwards, a thin temporary protection layer is applied.

Quality control:
Control by the manufacturer and by TÜV Rheinland Group. Control of zinc material according to the QUALITY ZINC list of requirements as set up by TÜV Rheinland Group. Quality management control according to DIN ISO 9001.

2.8 Environment and health during manufacturing

Environmental management according to DIN EN ISO 14001.
Energy management according to ISO 50001.

2.9 Product processing/Installation

Basic principles:
During transportation and storage, RHEINZINK® must be kept dry and ventilated to avoid the formation of zinc hydroxide For the same reason, when laying RHEINZINK® on wet surfaces or in the rain it should be ensured that the base material does not have hygroscopic properties ie. will dry off.

The thermic stretching of the material has to be taken into consideration when handling/installing the product.

Due to the typical brittleness of zinc under cold conditions, the temperature of the product should be 10 °C. In other cases, adequate mechanical equipment should be used, e.g. hot air blasts.

2.10 Packaging

Packaging of the titanium zinc sheets:
The packaging materials in use, paper/cardboard, polyethylene (PE foils), polypropylene (PP foils) and steel, are recyclable (non-reusable wooden pallets, reusable wooden and metal pallets). If gathered separately, return in Germany is organized by INTERSEROH. which collects the packaging material at given sites with exchangeable containers upon request and complies with legal regulations. The reusable wooden and steel pallets are taken back and are reimbursed by RHEINZINK GmbH & Co. KG and the wholesale trade (refund system).

2.11 Condition of use

RHEINZINK® is UV-resistant and does not rot. It is resistant against a rust film, nonflammable and resistant to radiating heat and against most of the chemical substances used in building construction. Effects on the durability of RHEINZINK® products with regard to snow, rain and hail are not known. The effects of snow and rain may be neglected. This material has a repellent effect to electrosmog (electromagnetic radiation in excess of 98%).
RHEINZINK® develops a superficial protective coating, the so-called patina, which darkens only slightly over the years and which is responsible for the high resistance of zinc against corrosion. In the chemical process that forms this patina, zinc-oxide develops in contact with the oxygen in the air. Next, due to the influence of water (precipitation), zinchydroxide develops, which will be transformed into a tight, strongly adhering and non water-soluble coating of basic zinc carbonate (patina) on reaction with the carbon dioxide in the air. Therefore RHEINZINK® does not require any maintenance and cleanning.

2.12 Environment and health during use

Environmental aspects:
The transfer of zinc ions via rain water is constantly reduced due to the development of the natural protecting coat of zinc carbonate (Patina). The further transfer of zinc ions depends mainly on air contamination with 'acid' pollutants, particularly with SO_2. As a result of the reduction of SO_2 concentration in the air to one fifth of the former values during the last 30 years, the zinc concentration of precipitation has subsequently been reduced by the same amount in the rainwater. The total-zinc-concentration has been lower that the prescriptive limits for drinking water.
In aquatic systems only a small part of the total zinc concentration is available for an oraganism - this amount is called bioavailable. It is related to the physical-chemical contitions of the receiving water body. The bioavailability is for example influenced by the amount of zinc which is organically or inorganically bound, linked to particles or competes which other ions.

	Roof drainage	Roofing	Facade cladding
Average Material thicknass	0,70 mm	0,70 mm	0,80 mm
Density	7,2 g/cm³	7,2 g/cm³	7,2 g/cm³
Exposed surface	50%	75%	10%
Max. Run-off rate	3,0 g/m²/a	3,0 g/m²/a	3,0 g/m²/a
Min. Run-off rate	2,0 g/m²/a	2,0 g/m²/a	2,0 g/m²/a
Max. zinc Run-off (per m²)	1,5 g/m²/a	2,25 g/m²/a	0,3 g/m²/a
Min. zinc Run-off (per m²)	1,0 g/m²/a	1,5 g/m²/a	0,2 g/m²/a
Max. zinc Run-off (per kg)	0,3 g/kg/a	0,45 g/kg/a	0,05 g/kg/a
Min. zinc Run-off (per kg)	0,2 g/kg/a	0,3 g/kg/a	0,03 g/kg/a

Lit.: R. H. J. Korenromp et al, „Diffusive Emissions of zinc due to atmospheric corrosion of zinc coated (galvanised) materials", TNO- Report R 99/441 (1999)

Health aspects:
There will be no effects to health if the RHEINZINK® products are used according to their designated function. Zinc, like iron, belongs to the essential metals. Zinc is not accumulated in the body. The recommended daily intake of zinc according to the Deutsche Gesellschaft für Ernährung (DGE - German Society for Nutrition) is 15 mg.

2.13 Reference service life

Service lifetime according to BBSR: > 50 years, theoretical lifetime according to available literature > 100 years. The standard ISO 15686 has not been considered. Influences on ageing when applied in accordance with the rules of technology.

2.14 Extraordinary effects

Fire

Fire performance:
The RHEINZINK® products comply with DIN 4102, Part 1 and to DIN EN 13501-1 the Requirements of Building Material Class A1 "non-combustible".

Smoke production/smoke concentration:
When heated above 650 °C vaporization as zinc oxide (ZnO) occurs, producing smoke.
Toxicity of the fumes:
The ZnO smoke may cause zinc fever (diarrhoea, fever, dry throat) when inhaled over some period time, this disappears completely 1 to 2 days after inhalation.

Change of state (burning drip down/drop-out):
The melting point is 420°C.

Water
None.

Mechanical destruction
None.

2.15 Re-use phase

Disassembly
When renovating or disassembling a building, RHEINZINK® products can easily be collected.

Circulation
The trimming scrap produced during manufacturing the material is 100% remelted at RHEINZINK GmbH & Co. KG and processed into new products. The cuttings occurring at building sites as well as used zinc from renovation sites are gathered and may be sent directly or via scrap gathering organisations to secondary melting plants - several exist in Germany. The energy necessary for recycling titanium zinc sheets is only 5% of the primary energy content of zinc. The demand for zinc scrap, resulting from zinc recycling's low energy requirement, is also mirrored by the fact that generally about 70% of the value of the zinc content is reimbursed. According to the newest information, the total recycling rate is up to 96%.

2.16 Disposal

Due to the effective recycling process, no zinc has to be disposed.

2.17 Further information

Additional information: www.rheinzink.de

3. LCA: Calculation rules

3.1 Declared Unit
The declared unit is 1 kg of RHEINZINK-prePATINA® blue-grey/graphite-grey

3.2 System boundary

Type of the EPD: cradle to gate - with options
In this study, the product stage information modules A1, A2, and A3 are considered. These modules include production of raw material extraction and processing (A1), processing of secondary material input (A1), transport of the raw materials to the manufacturer (A2), manufacturing of the product (A3) and the packaging materials (A3).
The EoL of the product (Modul D) is also included.

3.3 Estimates and assumptions
No assumptions and estimations were necessary for the LCA.

3.4 Cut-off criteria
Criteria for the exclusion of inputs and outputs (cutoff rules) in the LCA and information modules and any additional information are intended to support an efficient calculation procedure.
All inputs and outputs to a (unit) process are included in the calculation, for which data were available. The applied cut – off criteria is 1 % of renewable and non-renewable primary energy usage and 1 % of the total mass input of that unit process in case of insufficient input data or data gaps for a unit process. The total of neglected input flows per module, e.g. per module A, B, C or D is a maximum of 5 % of energy usage and mass.

3.5 Background data
Background processes are taken from the publicly Professional GaBi 5 databases as far as available.
Country and region specific data on energy sources including electricity and region specific data on raw materials such as high grade zinc were taken from GaBi databases.

3.6 Data quality
The process data and the used background data (GaBi 5) are consistent. In addition, the origin of the data is documented. Additional information is gathered regarding the age of the data.
The input and output data of the whole process Plant was strongly emphasized. The supplied data (Processes) were provided by RHEINZINK and checked for plausibility. Therefore, the data quality can be described as good.
The age of the data employed in this study is due to 2010.

3.7 Period under review
Modeling is based on production data from 2010.
Background data refer from 2008 to 2011.

3.8 Allocation
In this study, allocation was avoided wherever possible as required in EN 15804.
However, the following allocations had to be done:
- Credits from energy recovery of production waste (Modul A3)
- Credits from recycling from the end of life of the product (ModulD)

3.9 Comparability
Basically, a comparison or an evaluation of EPD data is only possible if all the data sets to be compared were created according to EN 15804 and the building context, respectively the product-specific characteristics of performance, are taken into account.

4. LCA: Scanrios and additional technical information

The modules A4, A5, B1, B2, B3, B4, B5, reference service life, B6, B7 and C1 – C4 are not considered and declared in this study.
The credits given in Module D are a result of the 100% recyclability of each zinc-product. After the scrap collection (a collection rate of 96% was assumed), zinc scrap is sent to a re-melting process, where the scrap is converted to secondary zinc. The credit for the zinc gained through re-melting is calculated with the dataset of the primary production.

5. LCA: Results

DESCRIPTION OF THE SYSTEM BOUNDARY (X = INCLUDED IN LCA; MND = MODULE NOT DECLARED)

PRODUCT STAGE			CONSTRUCTION PROCESS STAGE		USE STAGE							END OF LIFE STAGE				BENEFITS AND LOADS BEYOND THE SYSTEM BOUNDARYS
Raw material supply	Transport	Manufacturing	Transport	Construction-installation process	Use	Maintenance	Repair	Replacement	Refurbishment	Operational energy use	Operational water use	De-construction demolition	Transport	Waste processing	Disposal	Reuse-Recovery-Recycling-potential
A1	A2	A3	A4	A5	B1	B2	B3	B4	B5	B6	B7	C1	C2	C3	C4	D
X	X	X	MND	MND	MND	MND	MND	MND	MND	MND	MND	MND	MND	MND	MND	X

RESULTS OF THE LCA - ENVIRONMENTAL IMPACT: 1kg proPatina blue-grey/graphite-grey

		Manufacturing	Credits
Parameter	**Einheit**	**A1-A3**	**D**
GWP	[kg CO_2-Äq.]	3,9E+00	-2,6E+00
ODP	[kg CFC11-Äq.]	3,4E-07	-3,0E-07
AP	[kg SO_2-Äq.]	2,3E-02	-1,9E-02
EP	[kg PO_4^{3-}- Äq.]	2,7E-03	-2,1E-03
POCP	[kg Ethen Äq.]	1,5E-03	-1,1E-03
ADPE	[kg Sb Äq.]	2,0E-04	-1,6E-04
ADPF	[MJ]	3,8E+01	-2,5E+01
Caption	GWP = Global warming potential; ODP = Depletion potential of the stratospheric ozone layer; AP = Acidification potential of land and water; EP = Eutrophication potential; POCP = Formation potential of tropospheric ozone photochemical oxidants; ADPE = Abiotic depletion potential for non fossil resources; ADPF = Abiotic depletion potential for fossil resources		

RESULTS OF THE LCA - RESOURCE USE: 1kg proPatina blue-grey/graphite-grey

		Manufacturing	Credits
Parameter	**Einheit**	**A1-A3**	**D**
PERE	[MJ]	8,8E+00	-6,7E+00
PERM	[MJ]	0	0
PERT	[MJ]	8,8E+00	-6,7E+00
PENRE	[MJ]	5,1E+01	-3,5E+01
PENRM	[MJ]	0	0
PENRT	[MJ]	5,1E+01	-3,5E+01
SM	[kg]	0	0
RSF	[MJ]	3,2E-04	4,0E-03
NRSF	[MJ]	3,4E-03	4,2E-02
FW	[m^3]	-*	-*
Caption	PERE = Use of renewable primary energy excluding renewable primary energy resources used as raw materials; PERM = Use of renewable primary energy resources used as raw materials; PERT = Total use of renewable primary energy resources; PENRE = Use of non renewable primary energy excluding non renewable primary energy resources used as raw materials; PENRM = Use of non renewable primary energy resources used as raw materials; PENRT = Total use of non renewable primary energy resources; SM = Use of secondary material; RSF = Use of renewable secondary fuels; NRSF = Use of non renewable secondary fuels; FW = Use of net fresh water		

RESULTS OF THE LCA - OUTPUT FLOWS AND WASTE CATEGORIES: 1kg prePatina blue-grey/graphite-grey

		Manufacturing	Credits
Parameter	**Einheit**	**A1-A3**	**D**
HWD	[kg]	-*	-*
NHWD	[kg]	-*	-*
RWD	[kg]	4,85E-03	3,6E-03
CRU	[kg]	-	-
MFR	[kg]	0	9,6E-01
MER	[kg]	-	-
EE [Typ]	[MJ]	-	-
EE [Typ]	[MJ]	-	-
Caption	HWD = Hazardous waste disposed; NHWD = Non hazardous waste disposed; RWD = Radioactive waste disposed; CRU = Components for re-use; MFR = Materials for recycling; MER = Materials for energy recovery; EE = Exported energy per energy carrier		

**These indicators are temporarily not reported as agreed in the advisory board meeting from 04.10.2012.*

LCA: Interpretation

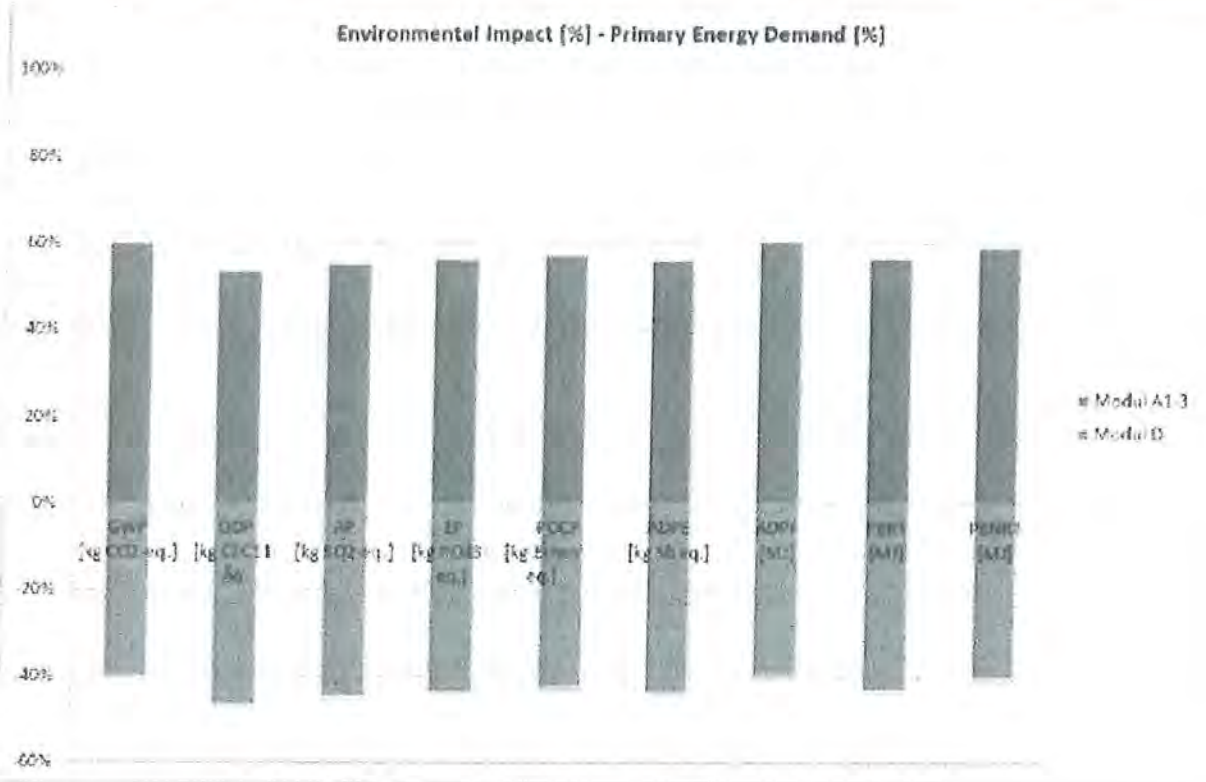

Impact categories for the life cycle of 1kg RHEINZINK-prePATINA® blue-grey/graphit-grey

The **GWP** is dominated by the use of the high grade Zinc (84%). The pre-process of bright-rolled zinc sheet is contributing to 94% to the total GWP impact. Almost the rest is due to the energy consumption and use of auxiliary materials. Around 40% of the impact is credited because of the high recycle rate of the product.
The **ODP** is most notably influenced by the use of the refined Zinc (99%), as raw material. These results come mainly from the used power grid mix and other energy carriers by the extraction and production of high grade zinc. The relevant emissions are the R 11 and R 114.
The **AP** is also dominated by the production due to the emissions related to use of the high grad zinc and to the energy consumption at the manufacture side. Mostly the impact refers to emissions to air: 52% from sulfur dioxide and 40% from nitrogen oxides.
The **EP** is significantly influenced by the use of the high grade zinc (95%) in the pre-process of bright-rolled zinc sheet. Almost the rest is due to the use of electric energy and auxiliary materials. Nitrogen oxides emissions contribute with around 91% to the total impact.

The **POCP** is particularly dominated by the use of the refined zinc (94%) and present a similar profile as the eutrophication potential. The main emissions contributing to this impact category are NMVOCs (12%), sulfur dioxide (31%) and nitrogen oxides (34%).
The **ADP elements** are dominated by the raw material high grade Zinc, coming from the consumption of copper-gold-silver-ore (82%) and lead zinc ore (20%).
The **ADP fossil** is dominated with around 85% by the raw material Zinc (44% coming from the consumption of hard coal) and 8,2% by the electricity grid mix used during the production of the product bright rolled zinc sheet. The most important energy sources are hard coal (44%), natural gas (26%), crude oil (13%) and lignite (16%).
The **total primary energy** demand is divided into around 89% of non-renewable energy and 11% of renewable energy.
The primary energy demand non-renewable (**PENRT**) is dominated by the raw material high grade zinc.
The renewable energy demand (**PERT**) present a similar profile as the non-renewable, the dominating contributor is the high grade zinc production (90%).
8,4% of the total impact comes from the use of electric energy in the production of preweathered zinc sheet.

7. Requisite evidence

Runoff rates
In a report of TNO of 1999, a literature study was undertaken to determine the runoff rates of zinc in Europe.
The following conclusions were taken in this report:

Corrosion rates refer to the loss of metallic zinc, initially accumulating as ionic zinc in the patina layer. Run-off rates refer to the "wash-off" of ionic zinc from the patina layer, the difference being the amount of zinc remaining in the patina layer. Run-off rates will in general be lower than corrosion rates or at maximum equal to the corrosion rates.
Available data for corrosion and run-off rate result from exposure of standard test panels mounted on standard test racks. Only little data are available from testing (on) real objects under the variety of typical microclimate conditions to which they are exposed. Recent experimental data with very large test racks (simulating zinc roofs) suggest that small test racks may overestimate the run-off rate.

The decrease of the corrosion rates runs parallel to the decrease of the ambient concentrations of SO_2, which is generally accepted as the dominant air pollution factor determining corrosion of zinc.

Corrosion rates decrease with time due to the increasing protection of the patina layer. Therefore long term (20 years) average corrosion rates will be substantially lower (60% of initial value) than those during the first years of fresh not patinated materials. After a period of about 10 years, the run-off rate will be approximately 2/3 of the corrosion rate.
Run-off rates can be calculated to be 3 g/m²/a in areas with higher SO_2 concentrations and 2 g/m²/a in areas with lower concentrations.

8. References

Institut Bauen und Umwelt e.V.
Institut Bauen und Umwelt e.V., Königswinter (pub.):

General principles for the EPD Programme of the Institute Construction and Environment e.V. (IBU), 2011-09

PCR Part A
Product Category Rules for Building-Related Products and Services, Part A: Calculation Rules for the Life Cycle Assessment and Requirements on the Background Report. 09-2012

PCR Part B
PCR Guidance-Texts for Building-Related Products and Services, Part B: Requirements on the EPD Building Metals, 07-2012.

http://www.bau-umwelt.com/

EN 15804
EN 15804:2012-04: Sustainability of construction works - Environmental Product Declarations - Core rules for the product category of construction products

EN 1179
DIN EN 1179:2003-09: Zinc and zinc alloys - Primary zinc; German version EN 1179:2003

EN 501
DIN EN 501:1994-11: Roofing products from metal sheet - Specification for fully supported roofing products of zinc sheets

EN 612
DIN EN 612:2005-04: Eaves gutters with bead stiffened fronts and rainwater pipes with seamed joints made of metal sheet

EN 988
DIN EN 988:1996-08: Zinc and zinc alloys - Specification for rolled flat products for building; German version EN 988:1996

GaBi 5 2011
GaBi 5: Software and Database for Life Cycle Engineering, IKP [Institute for Polymer Testing and Polymer Science] University of Stuttgart and PE Europe AG, Leinfelden-Echterdingen, 2011

GaBI 5 2011B
GaBi 5: Documentation of GaBi5-Datasets for life cycle engineering. LBP University of Stuttgart and PE INTERNATIONAL AG, 2011. http://documentation.gabi-software.com/

ISO 9001
DIN EN ISO 9001:2008, Quality Management System-Requirements

ISO 14001
DIN EN ISO 14001:2009-11: Environmental management systems - Requirements with guidance for use (ISO 14001:2004 + Cor. 1:2009)

ISO 14025
DIN EN ISO 14025:2011-10: Environmental labels and declarations - Type III environmental declarations - Principles and procedures

ISO 50001
DIN EN ISO 50001:2011-12: Energy management systems - Requirements with guidance for use (ISO 50001:2011)

Hullmann, Heinz (Ed.): Natürlich oxidierende Metalloberflächen; Umweltauswirkungen beim Einsatz von Kupfer und Zink in Gebäudehüllen (Naturally oxidising metal surfaces; environmental effects when using copper and zinc for buildings) ; 2003, Stuttgart, Fraunhofer ISB-Verlag, ISBN: 3-8167-6218-2.

R. H. J. Korenromp et al: „Diffusive Emissions of zinc due to atmospheric corrosion of zinc and zinc coated (galvanised) materials", TNO-Report R 99/441 (1999)

Bundesinstitut für Bau-, Stadt- und Raumforschung (BBSR): „Nutzungsdauer von Bauteilen für Lebenszyklusanalysen nach BNB" (BNB: Bewertungssystem Nachhaltiges Bauen) (2011)

S. Grund, M. Schönnenbeck: „Lebenslänglich", Dachbaumagazin 12/2011, 48-49 (2011)

P. Versloot, M. de Vries: „Vastleggen recyclingsysteem voor bouwzink", Intron- Studie Nr. 96078, 1996

Institut Bauen und Umwelt e.V.

Publisher
Institut Bauen und Umwelt e.V.
Rheinufer 108
53639 Königswinter
Germany

Tel +49 (0)2223 29 66 79- 0
Fax +49 (0)2223 29 66 79- 0
Mail info@bau-umwelt.com
Web **www.bau-umwelt.com**

Institut Bauen und Umwelt e.V.

Programme holder
Institut Bauen und Umwelt e.V.
Rheinufer 108
53639 Königswinter
Germany

Tel +49 (0)2223 29 66 79- 0
Fax +49 (0)2223 29 66 79- 0
Mail info@bau-umwelt.com
Web **www.bau-umwelt.com**

RHEINZINK®

Owner of the Declaration
RHEINZINK GmbH & Co. KG
Bahnhofstraße 90
45711 Datteln
Germany

Tel +49 2363 605-0
Fax +49 2363 605-209
Mail info@rheinzink.de
Web **www.rheinzink.de**

PE INTERNATIONAL

Author of the Life Cycle Assessment
PE International AG
Hauptstrasse 113
70771 Leinfelden-Echterdingen
Germany

Tel +49 711 341817-0
Fax +49 711 341817-25
Mail M.Bonell@pe-international.com
Web **www.pe-international.com**

This is the conformable print version of the IBU-Environmental Product Declaration. The original edition is available at www.bau-umwelt.com

RHEINZINK®

RHEINZINK GmbH & Co. KG
Postfach 1452
45705 Datteln
Germany

Tel.: +49 2363 605-0
Fax: +49 2363 605-209

info@rheinzink.de
www.rheinzink.com

106046-EZ-NT_EN-000-11-13

27 OCT 2017
B)

IAPMO R&T OCEANA
1040 Dandenong Road, Carnegie, VIC 3163 AUSTRALIA

00040

IAPMO–R&T OCEANA GasMark

JAS-ANZ www.jas-anz.org/register

IAPMO R&T Oceana is a product certification body which inspects and arranges for the independent laboratory testing of samples taken from the manufacturer's stock or from the market or a combination of both, to verify compliance of the requirements of applicable Standards and Specifications. This activity is coupled with periodic surveillance of the certified product taken from the market place or the manufacturer's factory. This certification is subject to the conditions set forth in the characteristics below and is not to be construed as any recommendation, assurance or guarantee by IAPMO R&T Oceana of the product acceptance by Authorities Having Jurisdiction.

GASMARK CERTIFICATE

Appliance

IAPMO R&T Oceana hereby grants to:

Escea Ltd

17 Canforth Street, Green Island, Dunedin, 9018 New Zealand

the right to use the GasMark in accordance with IAPMO Oceana Pty Ltd 'Mark Rules' on the product as described in the attached GasMark Schedule. The Certificate is granted subject to IAPMO Oceana Pty Ltd 'Governance Rules'.

Evaluated to:

AS 4553 "Gas space heating appliances"

Manufactured by:

Escea Ltd

Certificate No.:	GMK10442	Certified Date:	16 March 2017
Issue Date:	16 March 2017	Expiry Date:	15 March 2022

Russ Chaney

Chief Executive Officer of the IAPMO Group

This GasMark certification is for the period indicated herein and is void after the date shown above. Any change in material, manufacturing process, marking or design without having first obtained the approval of IAPMO R&T Oceana, or any evidence of non-compliance with applicable Standards, Specifications or of inferior workmanship, may be deemed sufficient cause for revocation of this certification. Reproduction of or reference to this certificate for advertising purposes may be made only by specific written permission of IAPMO R&T Oceana. Any alteration of this certificate could be grounds for revocation of this certification.

IAPMO–R&T OCEANA GasMark

GASMARK SCHEDULE

IAPMO R&T OCEANA

JAS-ANZ

Certificate Holder: Escea Ltd
Address: 17 Canforth Street
Green Island, Dunedin
New Zealand 9018

Manufacturer: Escea Ltd

Certificate No.: GMK10442
Issue Date: 16-Mar-17
Expiry Date: 15-Mar-22
First Certified: 16-Mar-17
Standard/s: AS 4553-2008 / Amdt 1-2011
Gas space heating appliances

Std/Spec: AS 4553-2008 / Amdt 1-2011

Certificate No.: GMK10442

Distributor	Brand Name	Model ID	Product Description	Input	Gas Type	Flue	Annual Energy Consumption	Star Rating	Star Shading	Features
Glen Dimplex Australia Pty Ltd	Escea	DS1400	Room sealed flame effect heater	40MJ/h	NG	Remote power flue	17047 MJ/Yr	4.7	140	Glass primary guard; fuelbed media: logs & flakes; coals; crystallite; crystallite & driftwood; woodland log
Glen Dimplex Australia Pty Ltd	Escea	DS1400	Room sealed flame effect heater	40MJ/h	Propane	Remote power flue	17047 MJ/Yr	4.7	140	Glass primary guard; fuelbed media: logs & flakes; coals; crystallite; crystallite & driftwood; woodland log
Glen Dimplex Australia Pty Ltd	Escea	DS1400	Room sealed flame effect heater	37MJ/h	ULPG	Remote power flue	16289 MJ/Yr	4.7	142	Glass primary guard; fuelbed media: logs & flakes; coals; crystallite; crystallite & driftwood; woodland log
AirGroup Australia	Escea	DS1400	Room sealed flame effect heater	40MJ/h	NG	Remote power flue	17047 MJ/Yr	4.7	140	Glass primary guard; fuelbed media: logs & flakes; coals; crystallite; crystallite & driftwood; woodland log
AirGroup Australia	Escea	DS1400	Room sealed flame effect heater	40MJ/h	Propane	Remote power flue	17047 MJ/Yr	4.7	140	Glass primary guard; fuelbed media: logs & flakes; coals; crystallite; crystallite & driftwood; woodland log
AirGroup Australia	Escea	DS1400	Room sealed flame effect heater	37MJ/h	ULPG	Remote power flue	16289 MJ/Yr	4.7	142	Glass primary guard; fuelbed media: logs & flakes; coals; crystallite; crystallite & driftwood; woodland log

END RECORD

END RECORD

Russ Chaney

Chief Executive Officer of the IAPMO Group

DS1400 Information Sheet for Builders and Architects

FIRE BY escea.



Appliance Information

Specifications

Heat Output	9.1-9.5 kW
Star Rating	4.7-5.1 stars
Gas Input / Consumption	37-40 MJ/hr
Gas Connection	Lower centre of appliance, 1/2" BSP
Gas Type	Natural Gas / ULPG (NZ)/ Propane (Aus)
Power Requirement	3 pin earthed 230V power outlet to be within 1.0m of right side of the appliance.
Appliance Weight	150kg

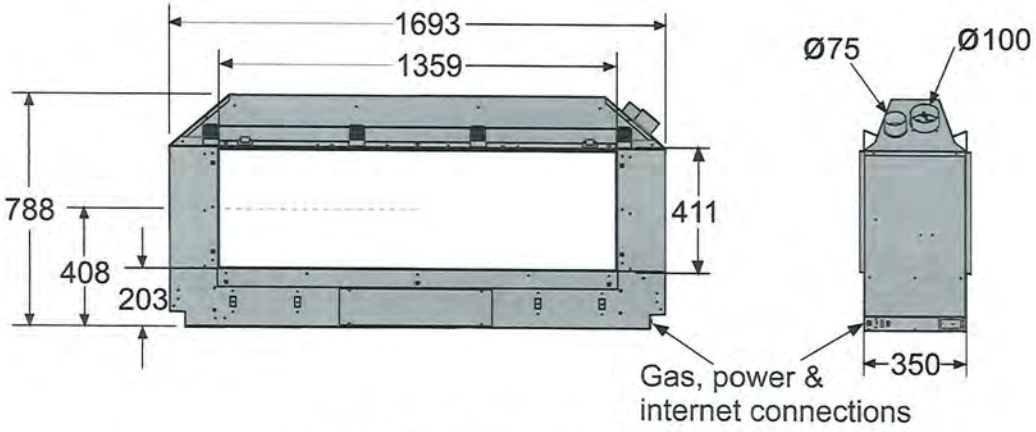

DS1400 Chassis Dimensions (mm)

Cavity Construction

Minimum Framing Dimensions (mm):

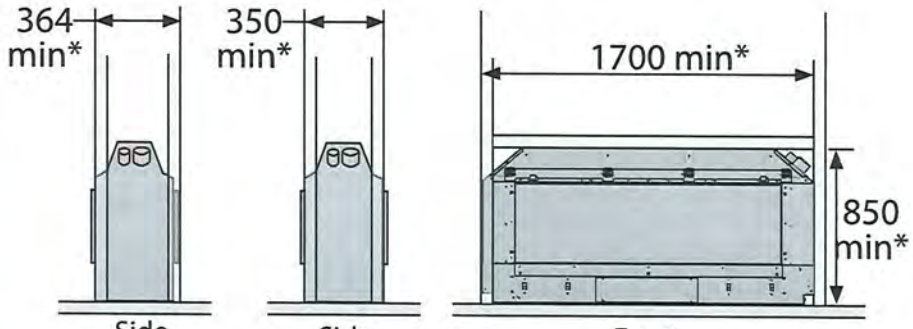

*Dimensions shown do not include allowances for clearance to combustibles to the flue

Minimum Wall lining Dimensions (mm):

The appliance must be installed prior to and behind the finished wall surface. Take into account any plaster board, tiles or any other finishing surface that may be intended for the finished wall surface.

Wall finishing materials must not encroach upon the minimum cavity clearances shown.

The wall board that lines the outside of the opening can be normal 13mm plaster board and does not need to be non-combustible.

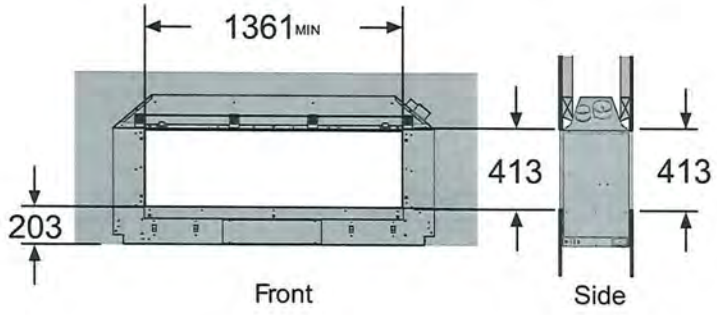

Flue Information

Flue Configuration (If more than 4m flue length is required)
If your flue system is greater than 4m long (as shown in diagrams below), then a flexible flue with condensate trap and rigid PP tube flue lengths is required.

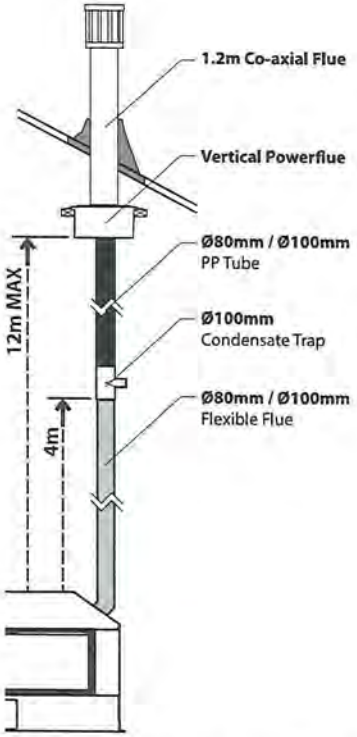

Vertically Terminated: (utilises the escea vertical power flue enclosure kit)

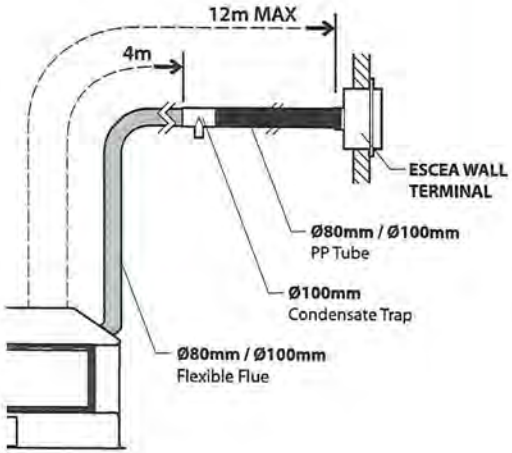

Horizontally Terminated: (utilises the escea horizontal power flue enclosure kit)

Clearances

Chassis and Flue Clearance

The fire chassis is zero clearance rated.
A 50mm clearance must be maintained from the exhaust flue for the first 1.2m of flexi flue from the appliance (see diagram below).
For information on running the PolyPro flue , see the manual on our website.

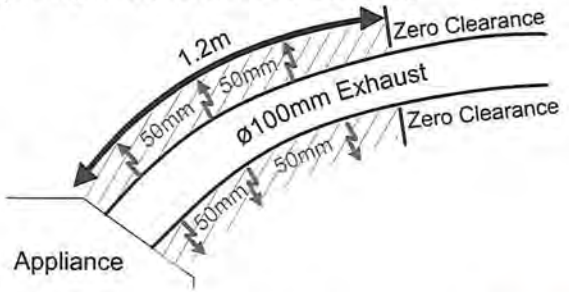

Television Clearances

The diagram (shown right) shows the recommended minimum clearances for the location of any electrical equipment (such as Plasma TV, LCD TV or home theatre) above a DS1400 gas fire.
A mantel/recess is not required to comply with our recommendation of TV installation.

Note: dimensions from the top edge of the glass frame.

Note: The television clearance recommendations below are to be treated as a suggestion of a suitable installation only. It is the responsibility of the end user to check the installation instructions of their electrical appliances to ensure that the location in relation to the gas fire is suitable. Escea in no way guarantees or takes responsibility that the above installation suggestion will be suitable for all electrical or home entertainment appliances.

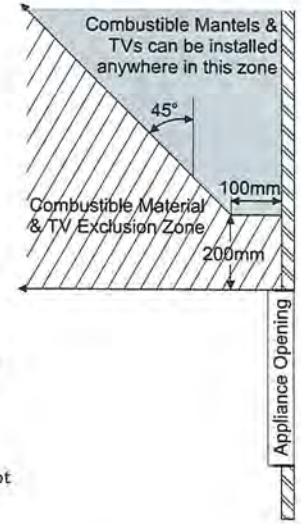

Mantel Clearance

Please refer to the diagram. Mantels or protruding ledges above the heater must not be installed lower than the dimension shown.
Note: dimension from the top edge of the glass frame.

Cavity Base

This appliance MUST be fully supported on its base, over the entire area of the underside of the appliance. The base must also be level and strong enough to support the total product weight, which is approximately **150kg**.
The fireplace can be recessed into the ground but must maintain clearances detailed in the diagram shown right for any combustible flooring materials.



This sheet should be used in conjunction with Escea's DS Series installation manual, the latest version can be found on our website **www.escea.com/nz/technical/** *; failure to do so may result in IMPROPER SPECIFICATION and/or design leading to a DANGEROUS, INADEQUATE and/or POOR INSTALLATION.*

FIRE BY escea.

Escea Ltd.
17 Carnforth Street
Dunedin, 9018
New Zealand
Ph +64 3 478 8220 | Web www.escea.com

DRAWING TITLE			
DS1400 SINGLE SIDED INSTALLATION			
SCALE AT A3	DATE	DRAWN BY	CHECKED
AS SHOWN	22/03/2017	MH	RM
DRAWING NO.	ECN NO.	REVISION NO.	
EDA-0230	ECN-2347	0003	

Typical timber structure with required insulation, linings and cladding to comply with all relevant standards and building codes

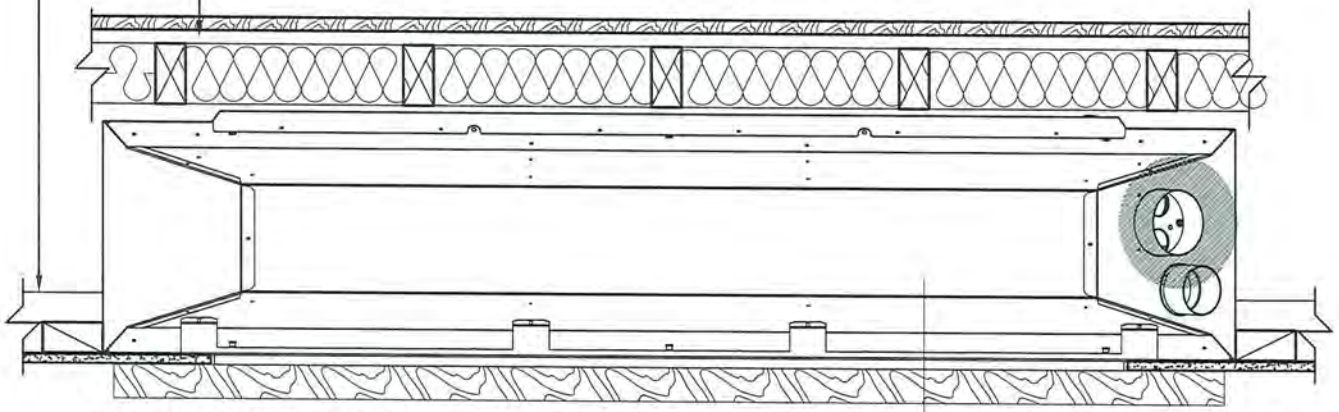

Mantel design as EXAMPLE ONLY - Refer to Section B6 of Escea's DS1400 Installation manual for more information on acceptable mantel sizes and clearances and television clearances.

Lintel, if required, to comply with NZS3604 or other relevant standard

Typical timber structure with required insulation, linings and cladding

Indication of chassis behind

Frameless DS1400 Shown. Other fascia options available - refer to sheets EDA-0232 & EDA-0233 and Section B5 for more information

PLAN
Scale: 1:10

A

50mm clearance to combustible materials for the first 1200mm of Exhaust - Past this 1200mm the exhaust is zero clearance - this 50mm clearance may affect the design of combustible building materials above the chassis due to the radius needed when the exhaust leaves the chassis

- Refer to Section C for more information on the flue system. Contact aa@escea.com for help on planning to install this fire.

Refer to section B5 for information on wall linings

Appliance MUST be fully supported on the base. Refer to Section B4 for minimum horizontal clearances

FFL

Allowance must be made for gas, power and ethernet connections - refer to Section D for more information

ELEVATION
Scale: 1:10

A

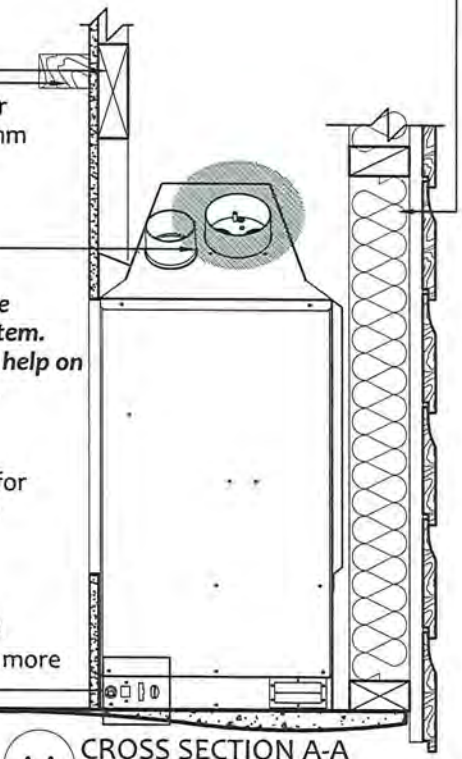

A-A CROSS SECTION A-A
Scale: 1:10

FIRE BY escea.

Installation / Service Instructions

DS1400
Gas Fireplace

For the latest documentation, visit www.escea.com 630358_b

Important:
The appliance shall be installed in accordance with;



- This installation instruction booklet
- Local gas fitting regulations
- Municipal building codes
- Electrical wiring regulations
- Any other relevant statutory regulations.
- AS/NZS 5601:2013 Gas Installations

NOTE: NOT INTENDED FOR FIREPLACE INSERT

WARNING:
This appliance must be installed by a qualified person.

Do not modify this appliance.

This appliance is not intended for use by young children or infirm persons unless they have been adequately supervised by a responsible person to ensure that they can use the appliance safely.

Young children should be supervised to ensure that they do not play with the appliance.

Failure to follow these instructions could cause a malfunction of the heater, which could result in death, serious bodily injury, and/or property damage. Failure to follow these instructions may also void your fire insurance and/or warranty.

Who can install this product:
Installation must be carried out by a registered installer who, on completion of the installation, must issue a:
AUS: Certificate of Compliance
NZ: Certificates that comply with the latest legislation
in accordance with national and/or local codes. If these are not issued then the Escea warranty may be void.

Warranty Repair and Annual Servicing:
Warranty repair work must be carried out by a recognised gas fire technician. It is recommended that recognised Escea Gas Fire Technicians are also used to carry out annual servicing requirements (particularly during the warranty period). For contact details of recognised Escea Gas Fire Technicians in your area, please contact the retailer from whom the appliance was purchased.

The heater must be installed according to these instructions and in compliance with all relevant building, gas fitting, electrical and other statutory regulations (eg. AS/NZS 5601). Any shortcomings in the appliance and flue installation will be the responsibility of the installer, and Escea will not be accountable for any such failings or their consequences.

Manufactured by: Escea Ltd, PO Box 5277 Dunedin NZ, Ph: +64 3 478 8220
For contact details of your local escea distributor or dealer please visit:

www.escea.com info@escea.com

DS1400 PRODUCT SPECIFICATION

MODEL NAME		DS1400		
Description of Appliance		Gas Fire Heater		
Star Rating		4.7-5.1 Stars		
A/NZ Approval No.		AS 4553		
Gas Type		Natural	Propane	ULPG
Gas input	High	40 MJ/hr	40 MJ/hr	37 MJ/hr
	Low	30 MJ/hr	28 MJ/hr	28 MJ/hr
Inlet Pressure	Max	5 kPa	5 kPa	5 kPa
	Min	1.13 kPa	2.75 kPa	2.75 kPa
Operating Pressure on High		0.82 kPa	1.98 kPa	1.68 kPa
Operating Pressure on Low		0.4 kPa	0.93 kPa	1.04 kPa
Burner Jet Size		LH & RH: 1.70mm Middle: 1.95mm	LH & RH: 1.02mm Middle: 1.3mm	LH & RH: 1.02mm Middle: 1.25mm
Burner Aeration		LH & RH: 1 x 3.5mm Middle: 1 x 6mm	LH & RH: 2 x 7mm (identification grooves present) Middle: 2 x 13mm	LH & RH: 2 x 8mm Middle: Spacer (no restriction)
Pilot injector		#37	#27	#27
Appliance Dimensions (mm)	Width	1693 mm		
	Height	788 mm		
	Depth	352 mm		
Weight	Kg	150 kg		
Ignition System		Electronic Ignition to pilot system		
		Escea PCB		
Ignition Activation		20 secs (approx)		
Flame Safeguard		Flame Rectification		
Consumption		160W @ 0.69A 230V		
Remote controls		Yes		
Timers		Yes		
Clock		Yes		
Function lock / child		Yes		
Temperature control		Yes		
Connections	Electric	230V AC		
	Gas	1/2" BSPP female lower centre of fireplace chassis		
	Flue Type	Aluminium Flexi Flue and PolyPro		
	Flue Size	75mm and 100mm Flexi Flue & PolyPro		
	Spigot Location	Rear and centre		
Data badge location		On Chassis Base		

A	**Installation Process and Product Description**		**8**
	A1	Product Description	8
	A2	Recommended Installation Process	8
	A3	Product Dimensions	9
B	**Creating the Cavity**		**10**
	B1	Cavity Shape	10
	B2	Designing the Cavity	10
	B3	Hearth	11
	B4	Cavity Base	11
	B5	Wall Linings	11
	B6	Television & Mantel Clearances	11
C	**Installing the flue**		**12**
	C1	Flue Configuration (For less than 4m length)	12
	C2	Flue Configuration (For more than 4m length)	14
	C3	Installing the Horizontal Powerflue Wall Terminal option	15
	C4	Installing the Internal Vertical Powerflue (Duravent)	18
	C5	Installing the Universal Vertical Powerflue (Internal Install)	21
	C6	Installing an External Vertical Powerflue (EVP or UVP)	23
	C7	Installing in Accordance with Relevant Codes	24
	C8	Running the Flue	25
	C9	Running the Powerflue Electrical Cable	26
D	**Installing the Electricity and Gas to the Appliance**		**27**
	D1	Power Supply	27
	D2	Network Cable	27
	D3	Gas Pipe Sizing	28
	D4	Gas Pipe Position	28
	D5	Gas Isolating Valve	29
E	**Installing the Appliance**		**30**
	E1	Connecting the Flue	30
	E2	Installation	30
	E3	Double Sided Conversion	30
	E4	Front to Back Conversion	33
	E5	Removing and Replacing the Glass	33
	E6	Removing Infill and Burners	34
	E7	Gas Type Conversion	34
	E8	Operating the Appliance	36
	E9	Checking the Operating Pressure	37
	E10	Auxiliary On/Off Button	39
	E11	Home Automation Setup	39
F	**Finishing the Installation**		**41**
	F1	Coal, Crystallite or Driftwood Fuelbed Installation	41
	F2	Log and Woodland Log Fuelbed Retainer Setup	41
	F3	Log Fuelbed Installation	41

F4 Woodland Fuelbed Installation 43
F5 Flame Picture 44
F6 Wall Lining 45
F7 Fitting the Fascia 46
F8 Locating Wall Mount Cradle for Wireless Control 47
F9 Operating the Appliance 47
F10 Normal Operating Sounds and Smells 48

G Installation Checklist 49

S Service Manual 50
S1 Annual Service Procedure 50
S2 Error Codes 51
S3 Cleaning the Fuelbed and Glass 52
S4 Cleaning the Fascia 52
S5 Checking Operating Pressure 52
S6 Replacing a Remote Control 53
S7 Replacing the Burners 53
S8 Serial Number 53
S9 Removing or Cleaning Fan 54
S10 Removing the Control Tray 55
S11 Pressure Switch Removal 56
S12 Replacing the Thermal Cut Outs (TCO) 57
S13 Servicing the Horizontal/Vertical Powerflue 59
S14 Wiring Diagram 60

A Product Description and Installation Process

A1 Product description

The Escea DS-Series gas fire is a room sealed gas appliance designed to be built into a false cavity. The appliance is flued using co-linear flexible aluminium flue and Polypro plastic piping beyond 4m. The user will control their fire with the Radio Frequency (RF) remote that will normally be located in it's wall mount cradle. In addition to the RF remote the appliance has a single auxiliary On/Off button on the unit. When not in operation it is in a standby mode unless it is physically isolated from the mains supply.

A2 Recommended Install Process

The following diagram illustrates the steps required to install your gas fire.
The sequence in which you choose to do these tasks will vary depending on your individual scenario.
Please read these instructions fully before proceeding with the installation.

False Cavity Installation

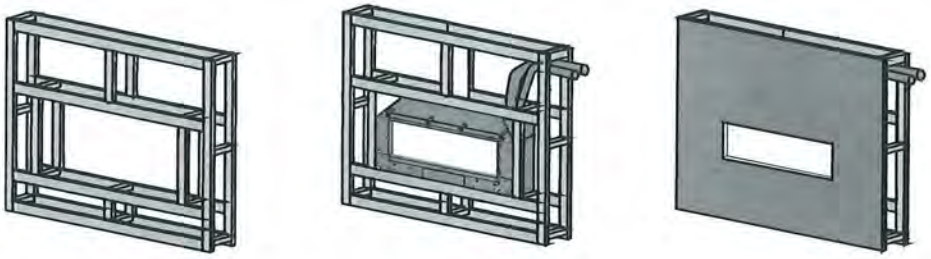

Create the Cavity	Install electrical / gas connections, flue system, and fireplace	Finish installation and fit fascia
Section B	Section C, D	Section F

A3 Product Dimensions

NOT TO BE MISTAKEN FOR CAVITY DIMENSIONS

All dimensions are in mm

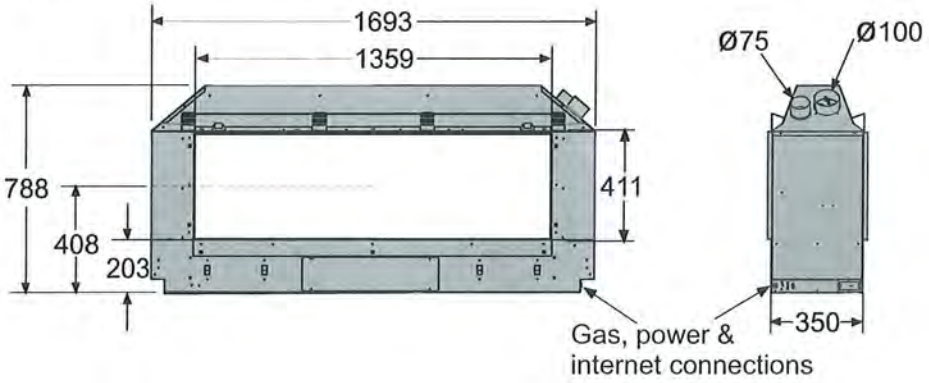

For more detail, view architectural drawings at www.escea.com

B Creating the Cavity

B1 Cavity Shape

The DS1400 is suitable for timber framed cavities.
Most existing masonry cavities will not be suitable.

B2 Designing the Cavity

The following aspects must be considered when designing this installation:

- Appliance physical size
- Single sided or Double sided
- Wall finishing and interaction with appliance
- Positioning of appliance in regards to wall lining (depth into wall)
- Is a Fascia to be used? one side or two sides?
- Exhaust termination aspect – horizontal / vertical and flue configuration
- Flue exhaust fan noise
- Exhaust cowl access for maintenance
- Gas pipe layout
- Gas isolation valve / pressure test point position
- Electrical isolation switch
- Home automation network connections - Ethernet cable layout

This DS1400 fire is to be installed prior to any wall lining.
The wall lining is the very last task to be completed in this installation.

The cavity and wall linings may be constructed from standard timber framing materials and do not need to be non-combustible.
Do not line the top of the cavity.
It is not necessary to line the sides, or back of the cavity.

Minimum Framing Dimensions

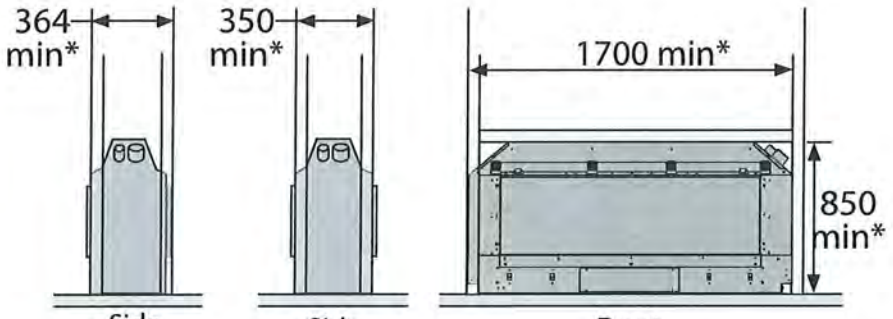

*Dimensions shown do not include allowances for clearance to combustibles to the flue

B3 Hearth

A Hearth is not required.

B4 Cavity Base

This appliance MUST be fully supported on its base, over the entire area of the underside of the appliance. The base must also be level and strong enough to support the total product weight, which is approximately **150kg**.
The fireplace can be recessed into the ground but must maintain clearances detailed in the diagram shown right for any combustible flooring materials.



B5 Wall lining

Only after all applicable sections up to section F5 have been completed, can you commence with the final wall linings detailed in section F6.
Wall lining cutout dimensions around the glass must be adhered to.
Please refer to section F6 for wall finishing dimensions surrounding glass.

B6 Television & Mantel Clearances

Television

The diagram (shown right) shows the recommended minimum clearances for the location of any electrical equipment (such as Plasma TV, LCD TV or home theatre) above a DS1400 gas fire.
A mantel/recess is not required to comply with our recommendation of TV installation.
Note: dimensions from the top edge of the glass frame.

Note: The television clearance recommendations are to be treated as a suggestion of a suitable installation only. It is the responsibility of the end user to check the installation instructions of their electrical appliances to ensure that the location in relation to the gas fire is suitable. Escea in no way guarantees or takes responsibility that the recommended installation suggestion will be suitable for all electrical or home entertainment appliances.

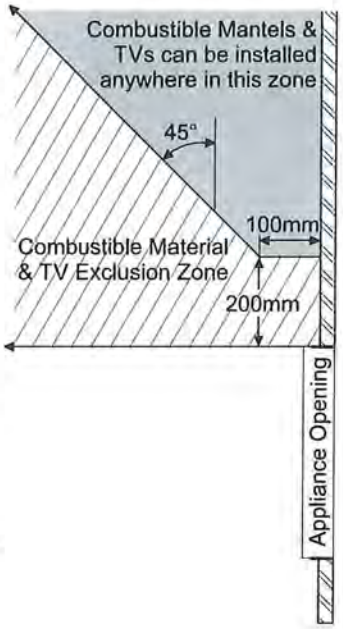

Mantel

Please refer to the diagram (shown right). Mantels or protruding ledges above the heater must not be installed lower than the dimension shown.
Note: dimension from the top edge of the glass frame.

C Installing the Flue

C1 Flue Configuration (If less than 4m flue length is required):

If your flue system is less than 4m long (as shown in diagrams below), then a simple aluminium flexible flue is required. If you wish to install a longer flue run, up to 12m, see section C2.

Horizontally Terminated: (utilises the escea horizontal power flue enclosure kit)

The horizontal offset of the terminal can be any amount up to the total flue length listed below. Please consult with Escea's technical staff if your intended flue configuration steps outside of the bounds of the flue configurations shown below.

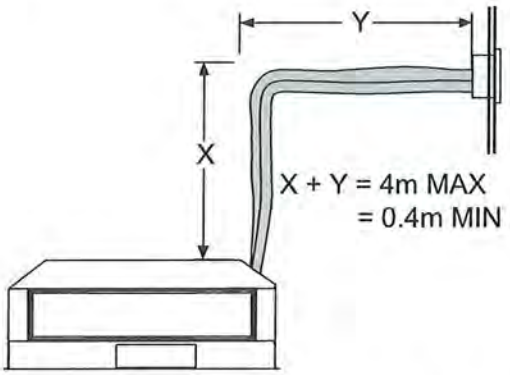

NOTE: When flueing above fire, pipe must slope towards fire - NOT towards terminal. Also when flueing below fire, pipe must slope towards terminal - NOT towards the fire.

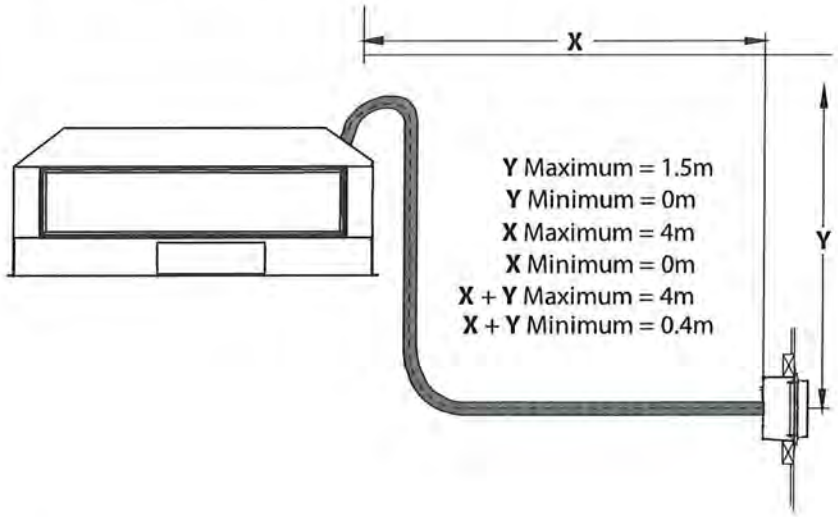

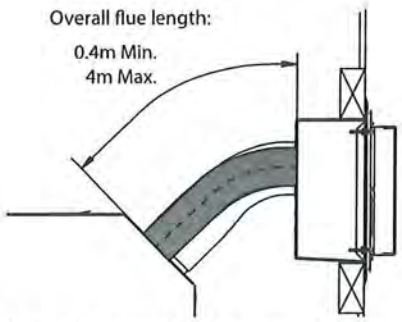

Vertically Terminated: (utilises the escea vertical power flue enclosure kit)

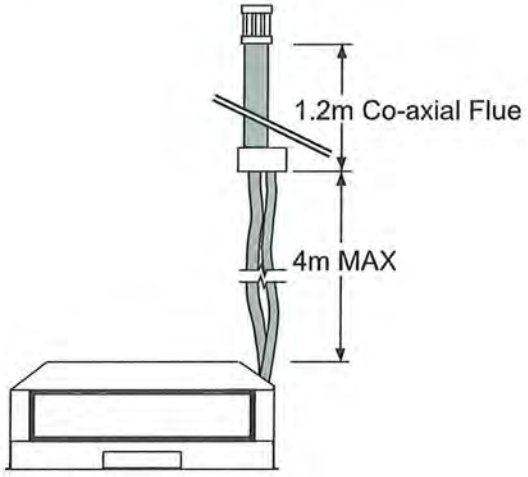

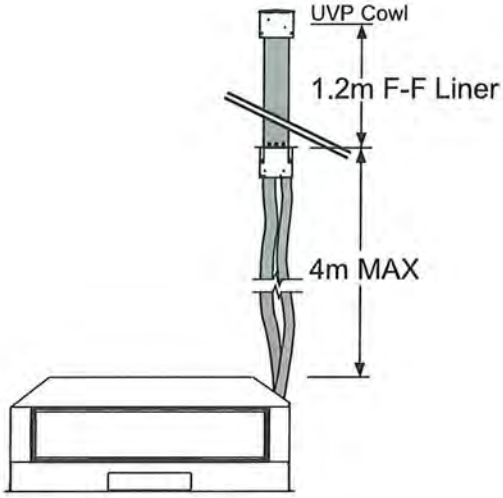

C2 Flue Configuration (If more than 4m flue length is required):

If your flue system is greater than 4m long (as shown in diagrams below), then a flexible flue with condensate trap and rigid PP tube flue lengths is required.

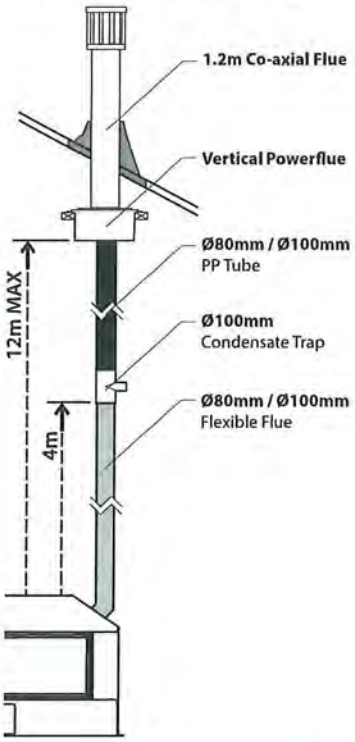

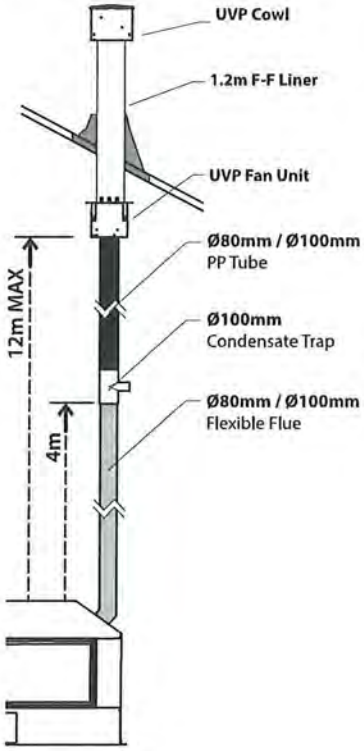

FOR MORE INFORMATION ON INSTALLATION OF THE POLYPRO FLUE, SEE 'POLY PRO FLUE INSTALLATION INSTRUCTIONS' AVAILABLE ON: WWW.ESCEA.COM OR SUPPLIED WITH THE FLUE.

FOR POLY PRO COMPONENT GUIDES, THESE ARE AVAILABLE ON: WWW.ESCEA.COM TITLED: HORIZONTAL FLUE COMPONENT GUIDE & VERTICAL FLUE COMPONENT GUIDE

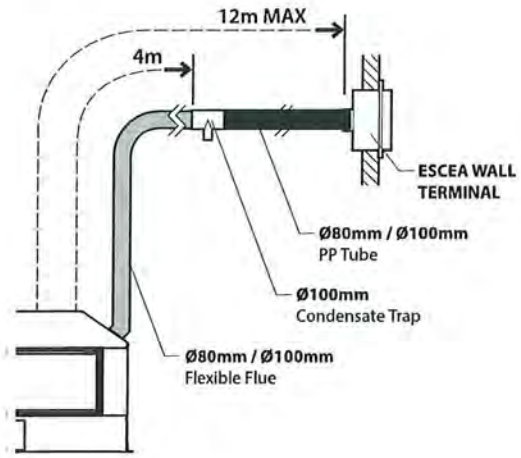

C3 Installing the Horizontal Powerflue Wall Terminal option

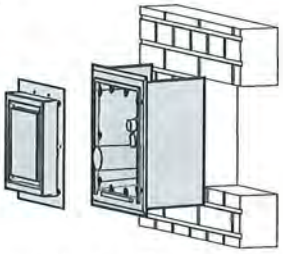

The Horizontal Powerflue Wall Terminal must be installed in the correct orientation. This allows for the correct operation of the flue system and prevents the ingress of water.

The Horizontal Powerflue Wall Terminal must be weather-tight when installation is complete to prevent damage to the dwelling. It must be installed by a suitably qualified person.

Fit the Horizontal Powerflue Wall Terminal into the hole and fix in place, making sure the installation is sealed appropriately to prevent the ingress of water from outside the wall cladding. Take notice of the label on the termination which shows the correct orientation that the terminal should be fitted.

NOTE: It is the responsibility of the installer to ensure the Horizontal Powerflue Wall Terminal is installed to all relevant building codes to ensure weather tightness.

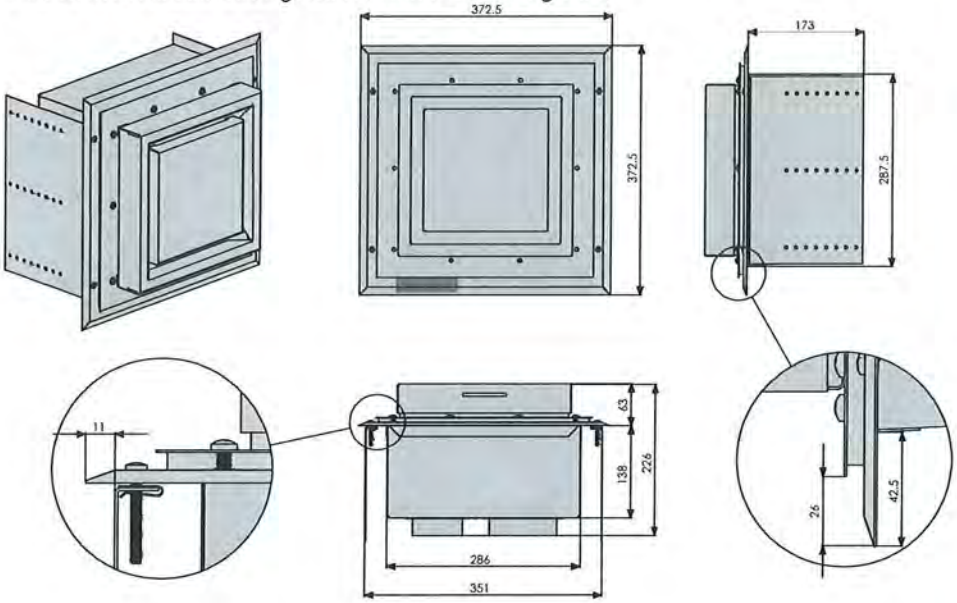

Creating the Hole in the Outside Wall

When cutting the hole in the outside wall, be mindful of how the installation Horizontal Powerflue Wall Terminal will be finished, the installation must be weatherproof.

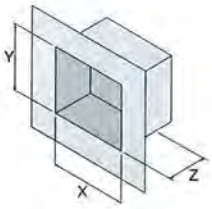

Ideal hole/cavity size for Horizontal Powerflue

	Without Side Brackets	With Side Brackets
X	298mm	360mm
Y	298mm	298mm
Z	175mm Excluding allowance for flue which exits here	

The Horizontal Powerflue Wall Terminal can be attached to the wall in two ways,
A) From the front of the terminal:

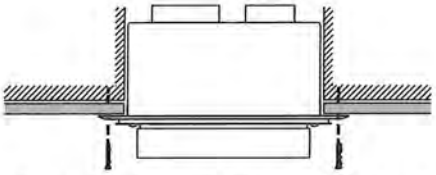

B) By attaching the optional Wall Terminal Installation Brackets to the sides of the cavity and attaching the Horizontal Powerflue Wall Terminal to these, from the front:

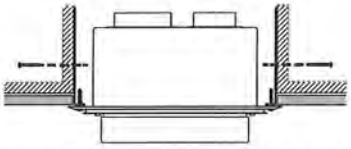

Attach the Ø100mm and Ø75mm flexible aluminium flues to the spigots on the rear of the Horizontal Powerflue Wall Terminal using the hose band clamps supplied. Plug the powerflue electrical cable into the back of the Horizontal Powerflue Wall Terminal.

For information on the PolyPro flue, see the installation manual which is supplied with the flue components.

Ensure that the electrical cable is firmly secured to the wall terminal or building to prevent damage or disconnection if pulled

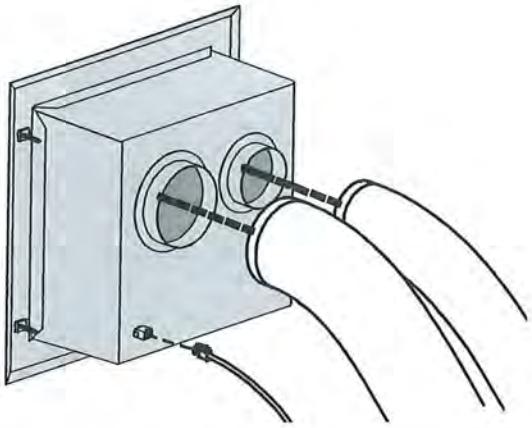

Fit the Horizontal Powerflue Wall Terminal into the hole and fix in place, making sure the installation is sealed appropriately to prevent the ingress of water from outside the wall cladding.

NOTE: It is the responsibility of the installer to ensure the Horizontal Powerflue Wall Terminal is installed to all relevant building codes to ensure weather tightness. This may necessitate the use of appropriate flashing material where appropriate.

IMPORTANT: Ensure that flashings do not restrict the air intake slot around the periphery of the cowl

How to flash the Horizontal Powerflue

The following diagrams are excerpts from the escea architect drawings, and are available in full on our website. These diagrams are recommendations, and your installation must comply with any local or national building codes.

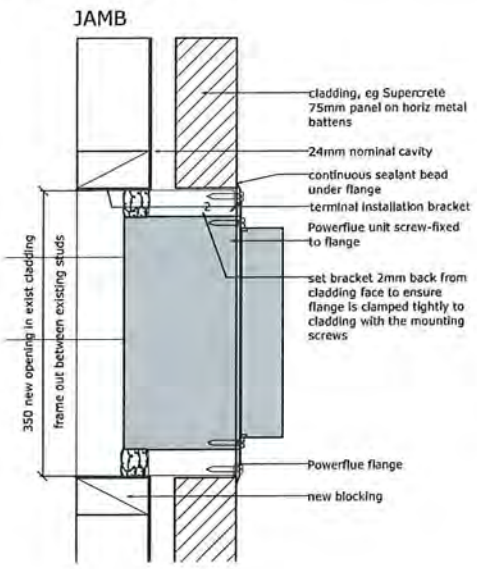

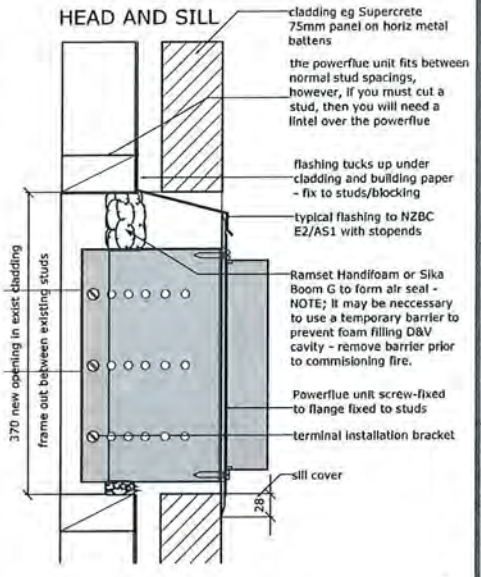

C4 Installing the Internal Vertical Powerflue (Duravent)



The internal vertical flue (duravent) is designed to have the box containing the fan and electronics mounted within the roof space of the house, and the vertical 200mm diameter twin wall flue penetrate through the roof. The standard kit comes with 1.2m of twin wall flue (post fan). Note total combined maximum vertical flue before the fan must be less than 12metres (max 4m Flexi+ max 8m polypro).
Use standard methods to flash the roof penetration, the installation must be weather proof and conform to all local council standards including powered flue roof termination rules.

The cowl surround should be fixed in place as shown

Mount the fan assembly box to roof framing using timber or builders strapping, ensuring the flue is vertical and rigidly mounted.

Aim to have the fan box mounted as high as possible, mainly to allow sufficient fall for condensation drainage if the flexi-flue is to run horizontally.

Ensure there is sufficient space below fan box to have access to fit the flexi-flue tubes and to allow flowing bends if required.

Note: The vertical powerflue (duravent) and the flexi flue connections must be installed in a location accessible for service or replacement, a service hatch or removable flashing to allow for access may be required.

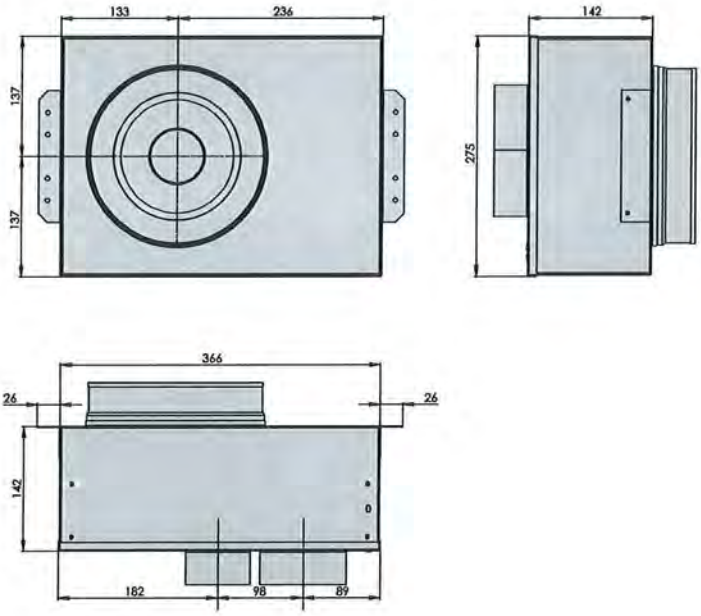

The Vertically terminated flue kit is intended for use within an accessible roof space or accessible 'chimney' construction. Service access must be provided.
Ensure installation complies with relevant building codes and regulations.

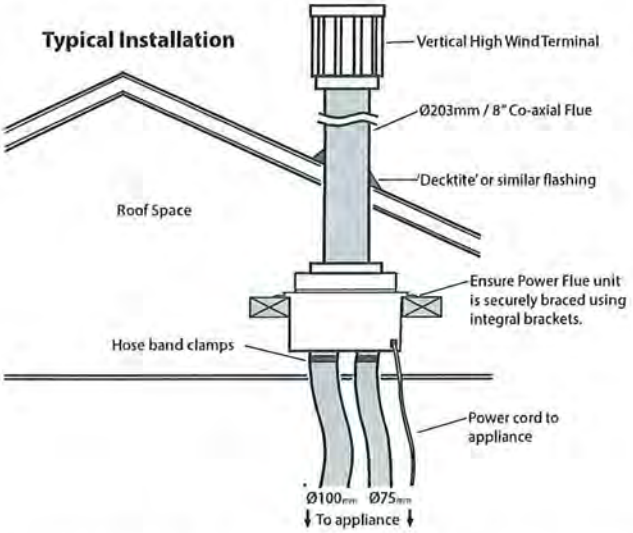

Installation the restrictor plate (Internal Vertical Power Flue Only)(Duravent)

Every Vertical Power Flue must have the restrictor plate fitted when installing a DS1400. To do this:

- ☐ Remove the powerflue lid, remove the screw that secures the elbow & then slide the elbow off.
- ☐ Attach the restrictor centrally over the air inlet as shown using the two rivets provided.
- ☐ Replace the elbow, replace the screw, and then replace and secure the lid.

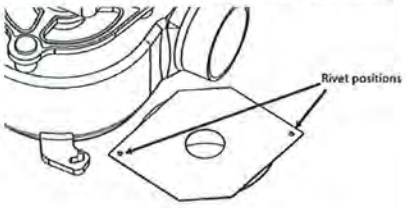

How to flash the Internal Vertical Powerflue

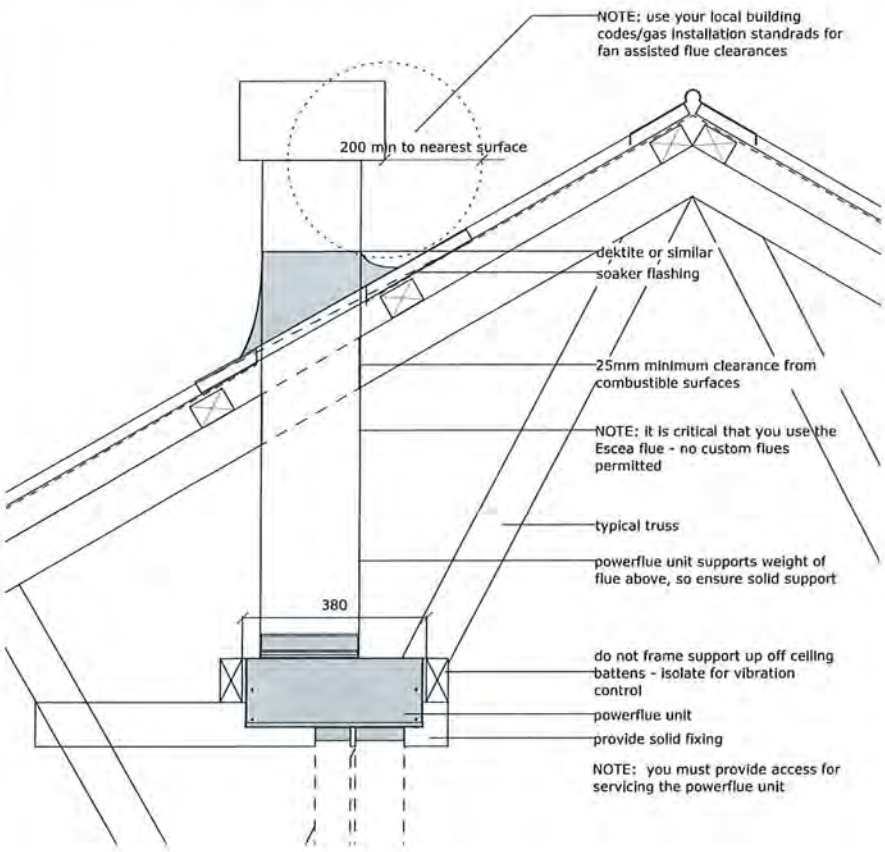

C5 Installing the Universal Vertical Powerflue (Internal Install)

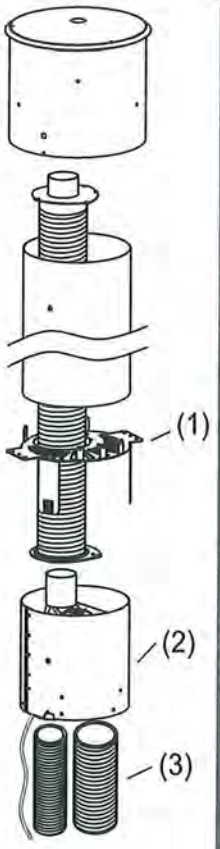

Note: For information regarding an external install of the UVP, go to section C6.

The UVP Internal configuration is designed to have the fan, mounted within the roof space of the house, and the vertical ø225mm diameter liner, containing a ø100mm flexi, penetrate through the roof. The UVP internal conversion kit comes with 1200mm liner which is specific to the internal installation and must always be used, an aditional 600mm liner extension can be purchased if required. Note: The flue setup must comply with sector C1 or C2.
Use standard methods to flash the roof penetration, the installation must be weather proof and conform to all local council standards including powered flue termination rules.

Mount the fan mount bracket(1) to the roof framing and straping using timber ensuring that the flue is rigid and vertical. Ensure that the mounting timber does not obstruct access to the 3xM5 screw threads on the side of the fan unit.

Aim to have the fan enclosure(2) mounted as high as possible, mainly to allow sufficient fall for condensation drainage if the flexi-flue is to run horizontally.

Ensure there is sufficient space below fan enclosure(2) to have access to fit the flexi-flue tubes(3) and allow flowing bends if required.

Note: The UVP-Internal and the flexi flue connections must be installed in a location accessible for service or replacement, a service hatch or removable flashing to allow access may be required.
Note: When installing the unit onto a flue liner, ensure the length of flue liner above the roof is the minimum required length. **ENSURE** the Ø25mm restriction plate is installed on the Inlet.

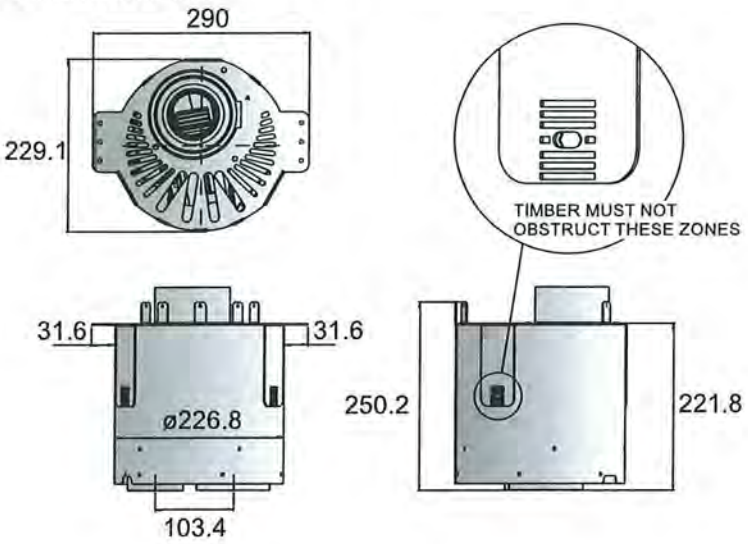

The UVP-Internal kit is intended for use within an accessable roof space or 'chimney' construction.
Service access must be provided.
Ensure installation complies with relevant building codes and regulations

Typical Installation

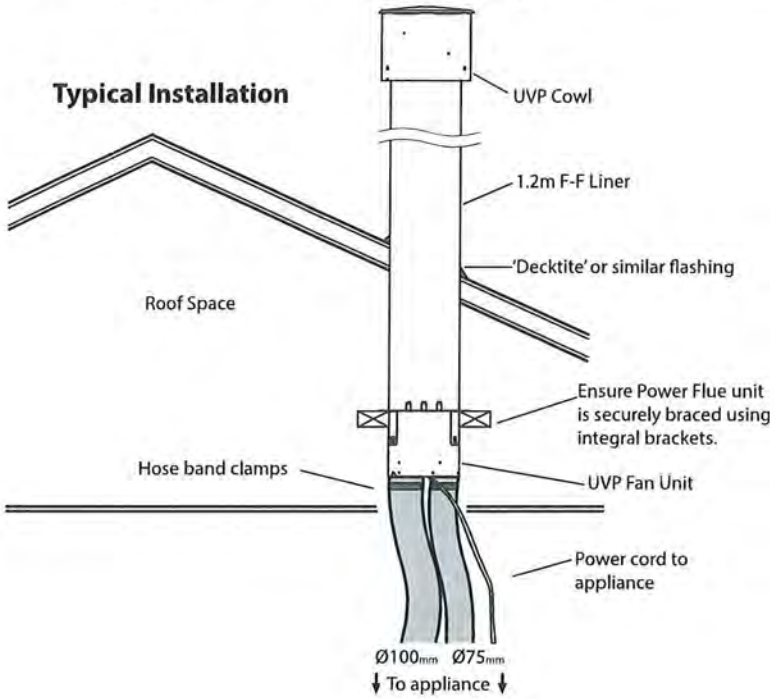

C6 Installing an External Vertical Powerflue (EVP or UVP)

Note: For information regarding an internal install of the UVP, go to section C5.

The EVP and UVP are designed to have the enclosure containing the fan unit mounted externally.

The cowl surround should be fixed in place as shown.

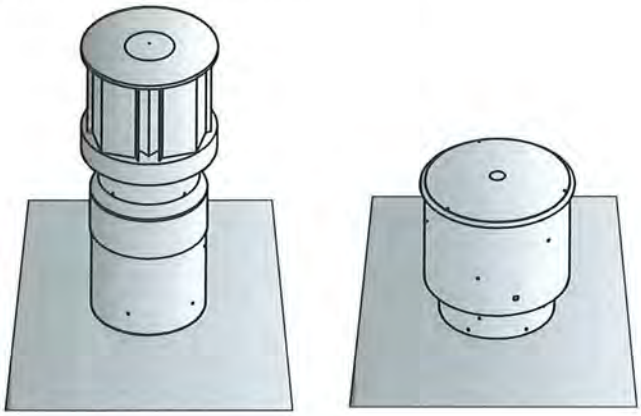

Depending on the kit purchased, mount the EVP/UVP kit to the top of a chimney flashing plate or penetrate the roof with an optional flue liner accessory and fit the EVP or UVP kit over the flue liner; sealing the penetration with a decktite or similar flashing. Ensure the terminal is vertical and rigidly mounted and the flexi flue attached below is fixed to the terminal spigots using the supplied hose clamps and is held in place by drilling 3 holes and screwing 3 self tapping screws evenly around each hose band clamp (as shown in the picture below).

Note: When installing the unit onto a flue liner, ensure the length of flue liner above the roof is the minimum required length. **ENSURE** the Ø25mm restriction plate is installed on the Inlet.



C7 Installing in Accordance with Relevant Codes:

The location of the Horizontal Powerflue Wall Terminal must be installed in accordance with AS/NZS 5601 and any other relevant building codes. If possible, avoid installing the Horizontal Powerflue Wall Terminal in areas exposed to high winds and extreme weather.

Some of the minimum clearances for a fan assisted wall terminal are listed below; please refer to AS/NZS 5601 Gas installation standard for full guidance on the design of the flue system. Where possible allow a greater clearance.

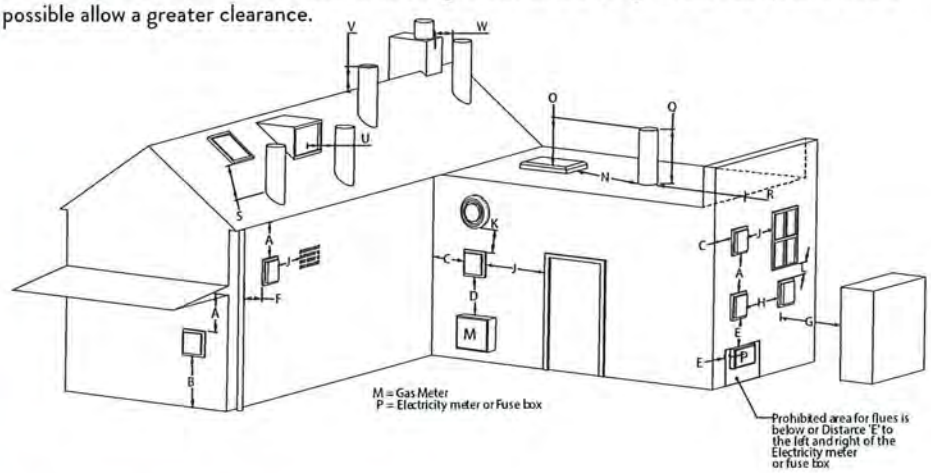

A	Below eaves, balconies and other projections	200mm
B	From the floor, above a balcony or other surface	300mm
C	From a return wall or external corner	300mm
D	From a gas meter or regulator vent	1000mm
E	From electricity meter or fuse box	500mm
F	From a drain pipe or soil stack	75mm
G	Horizontally from any building structure or obstruction	500mm
H	From any other flue terminal or combustion air intake	300mm
J	Horizontally from any moving window, door, non-mechanical air inlet, or any other opening into a building with the exception of sub floor ventilation	300mm
K	From a mechanical air inlet or spa blower	1000mm
L	Vertically below any moving window, door, non-mechanical air inlet, or any other opening into a building with the exception of sub floor ventilation	300mm
N	Horizontally from a roof light	600mm
O	Vertically from a roof light	500mm
Q	Vertically from a flat roof	500mm
R	Horizontally from a vertical structure	500mm
S	Below a roof window	2000mm
T	Above or either side of a roof window	600mm
U	From a dormer window	1500mm
V	Above the apex of the roof (see note 1 on following page)	300mm
W	From an open flue	1500mm

Notes:
1) Should the flue not extend past the apex, the top of the flue should extend at least 400mm from the roof (or 500mm in regions with heavy snow).
2) The installation of a flue into a carport is not recommended.
3) The flue terminal will get very hot when in use. Precautions should be taken to protect people and animals from injury.

C8 Running the Flue

A 50mm clearance to combustibles must be maintained from the exhaust flue for the first 1.2m of flexi flue from the appliance (see diagram below).

Run the Ø100mm and Ø75mm flexible aluminium hoses from the cavity to the rear of where the Horizontal or Vertical Powerflue Terminal will be installed. Allow enough stretch in the flexible aluminium flue to allow it to be able to protrude through the wall/ceiling/roof/flue liner to enable it to be connected to the Powerflue Terminal. The flue should be expanded at each end in order for the flue to be attached to the fire / powerflue. It is advisable to secure the flexi flue at regular intervals to prevent vibration, movement and sagging. Steel wire or 'builders strapping' may be used for this purpose. Note: The flexible flue is shipped in a 'compressed' form. Extend it to your desired length by stretching.

For information on running the PolyPro flue , see the installation manual which is supplied with the flue components.

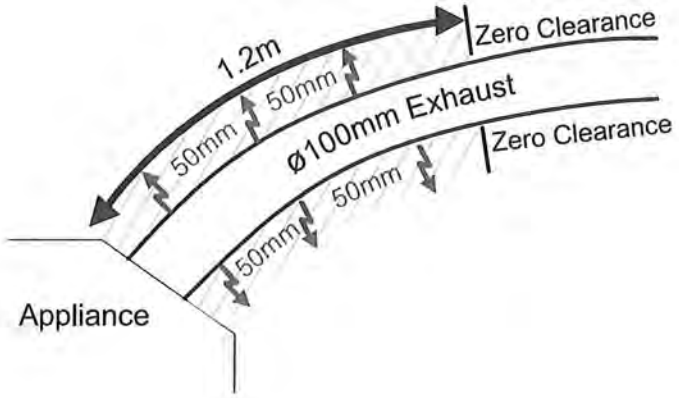

FOR MORE INFORMATION ON INSTALLATION OF THE POLYPRO FLUE, SEE 'POLY PRO FLUE INSTALLATION INSTRUCTIONS' AVAILABLE ON:
WWW.ESCEA.COM
OR SUPPLIED WITH THE FLUE.

FOR POLY PRO COMPONENT GUIDES, THESE ARE AVAILABLE ON:
WWW.ESCEA.COM
TITLED:
HORIZONTAL FLUE COMPONENT GUIDE &
VERTICAL FLUE COMPONENT GUIDE

C9 Running the Powerflue Electrical Cable

Note: The Powerflue Terminal is powered from the appliance, and must be connected to the appliance with the supplied electrical cable only.
Note: Ensure that the appliance power supply is disconnected before making the connection to the terminal

The supplied electrical cable is 7m long, flue extension kits also include a powerflue electrical cable extension.

Run the electrical cable from the cavity where the appliance will be installed to the hole in the outside wall. Ensure it is not draped over, or in contact with, the outer shell of the appliance or the flues and kept clear from any other possible heat sources, sharp edges, or moisture. Fix it appropriately and allow enough cable looped to be able to pull both the appliance and the powerflue terminal out from their installed positions.

END OF SECTION C

By the end of this section, you should have:

- ☐ A weather-tight installed Powerflue Terminal with clearance as specified by AS/NZ5601
- ☐ Reasonable access to the terminal for maintenance purposes
- ☐ Flue attached to the Powerflue Terminal leading back to the appliance with the correct flue clearances
- ☐ The electrical cable from the Powerflue Terminal run back to the appliance cavity in an electrically safe manner

D Installing the Electricity and Gas to the Appliance

D1 Power Supply

While the cavity is being created consideration should be given to appropriate location of a standard 3 pin, EARTHED 230/240V power outlet. This must be within 1.0m of the bottom right of the appliance.

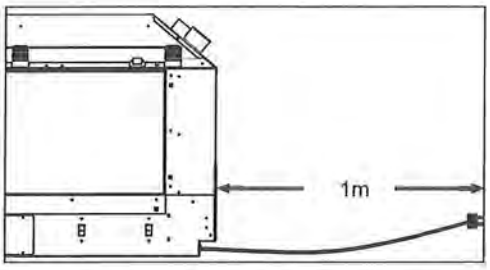

IMPORTANT: Locating the power outlet within the cavity makes the installation very neat but provision MUST be made to be able to switch the power supply off and on (electrical isolation switch) and MUST be accessible after the heater has been installed. This is normally done by means of a separate switch located outside of the cavity and wired to the plug. This will allow technicians to isolate the power supply before servicing the appliance.

This appliance must not be located immediately below a socket outlet.
This appliance will draw a maximum of 2 Amps from a 230/240V supply.
No additional power supply is required for the power flue.

D2 Network Cable

A 5 metre length of network (Ethernet) cable has been supplied. Connect it to the appliance (lower right) and the buildings modem.

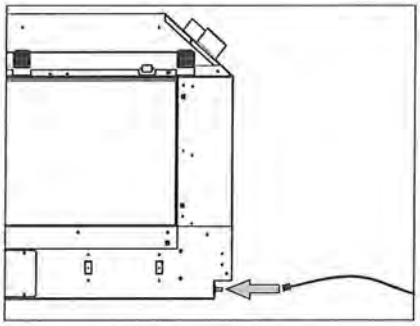

Two network cable access points are available: the primary connection is on the bottom of the RH outer face of the appliance for connecting permanently to the buildings router, the secondary connection point is located where the AUX button can be found (shown in section E9), for service technicians to access when the main connection method has not been used and has become inaccessible.

If you do not wish to connect the fireplace to the modem, the Network / Ethernet cable should be run to somewhere accessible by a service technician, such as a cupboard.

D3 Gas Pipe Sizing

Gas pipe should be sized as per the requirements of AS/NZS 5601.1. The pipe sizing must be sufficient to deliver the following volume of gas to the heater with all other gas appliances in the home running at the same time:

Maximum DS1400 Gas Consumption = 40MJ/hr

D4 Gas Pipe Position

The gas connection is inside the appliance and is ½" male BSP on the lower right of the appliance as shown below. Access is through the silicone grommet circled below on the RH side of the chassis.

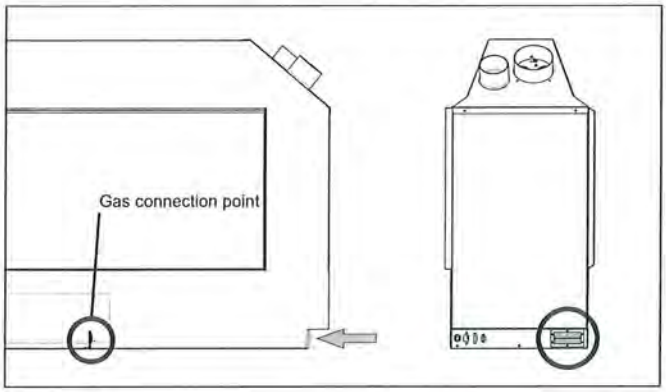

Access for connecting the gas supply to the gas connection point (shown in the diagram above) should be through the access hatches located on the front and back of the appliance (the front as shaded in the diagram below).

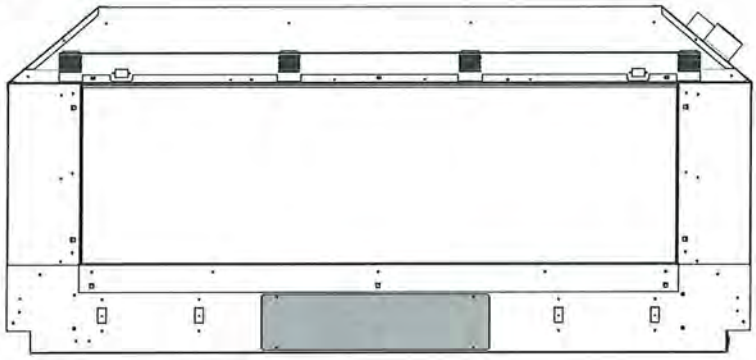

D5 Gas Isolating Valve

A gas isolating valve must be installed in the gas line as close to the appliance as possible. Fix it in a convenient position to allow it to be closed off quickly and easily during normal operation. Take into consideration access to this valve once the wall linings are on. This will also allow for easier servicing in the future.

END OF SECTION D

By the end of this section, you should have:

- ☐ An unlined cavity with 230/240V AC supply that the appliance can be plugged into an electrical isolating switch that is accessible once the appliance is installed
- ☐ A suitably sized gas supply to the right hand side of the appliance with a pressure test point, ready to be connected once installed
- ☐ Network cable installed, ready for plugging into appliance, regardless of being connected to Internet router/network or not

E Installing the Appliance

E1 Connecting the Flue

Access the top of the appliance and connect both the inlet flue (Ø75mm ID / 85mm OD) and the exhaust flue (Ø100mm ID / 110mm OD) to their respective spigots. Tighten the hose clamps onto the spigots. Ensure the flue connection is air tight. Sealant is not required.



WARNING: The flue connection MUST be secured with the clips provided and tape MUST NOT BE USED. If any of the flue pipe is damaged and integrity compromised then it should not be repaired with tape, it should be replaced.

E2 Installation

Insert the gas fire into the cavity and fix the appliance down in correct position using the brackets on each end of the appliance.
It is a requirement that this appliance be securely fastened at the base.

E3 Double Sided conversion

1. Follow section E4 and E5 to remove the glass, infill, and burners.

2. On the inside of the firebox, slightly loosen the firebox liner bracket (shaded in the diagram below) by loosening—not removing—the 3 screws (circled in the diagram below).

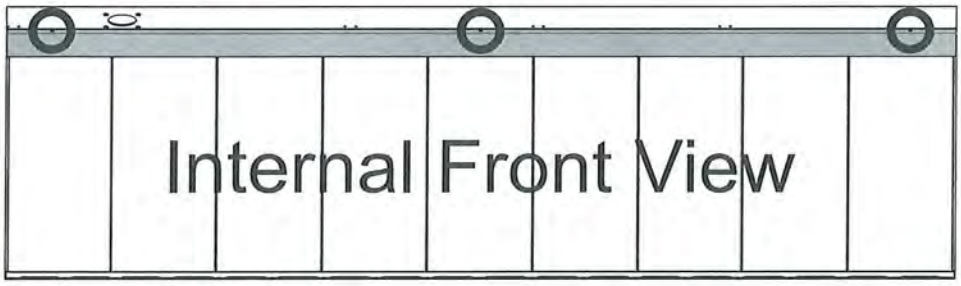

3. Carefully swing the lower half of each firebox liner towards you and pull down to release each panel (shaded in the diagram below).

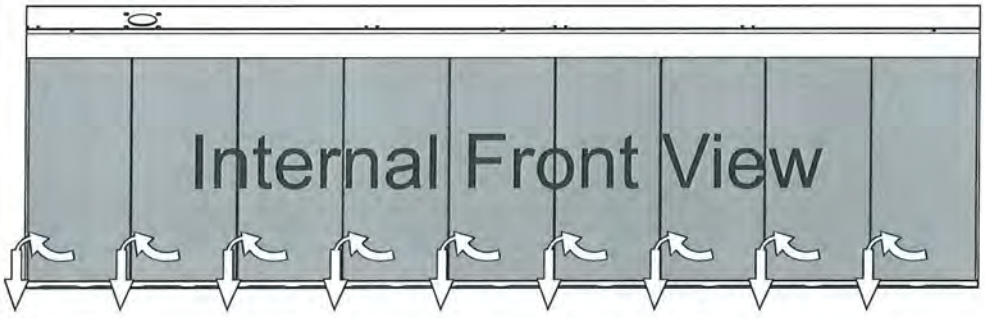

4. Remove the screws (circled in the diagram below) in the back panel of the appliance

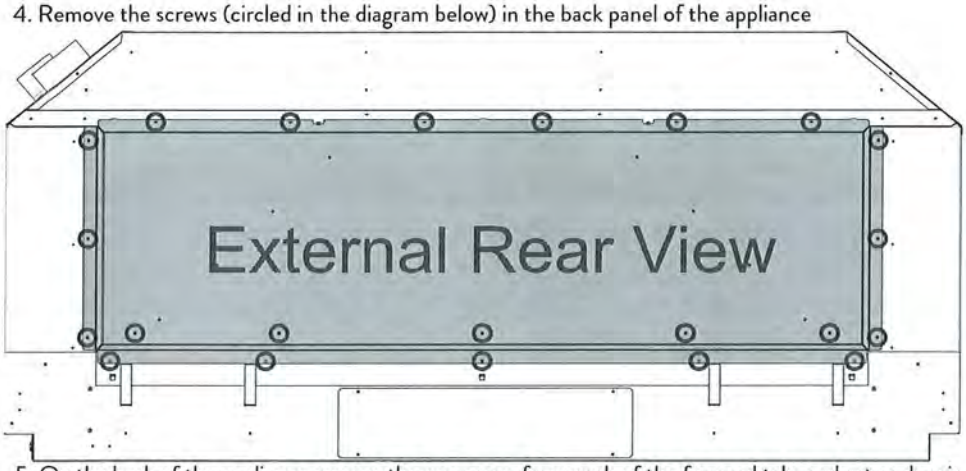

5. On the back of the appliance remove the one screw from each of the four red tabs and set each pair of tabs from open position (shown below) to the close position.

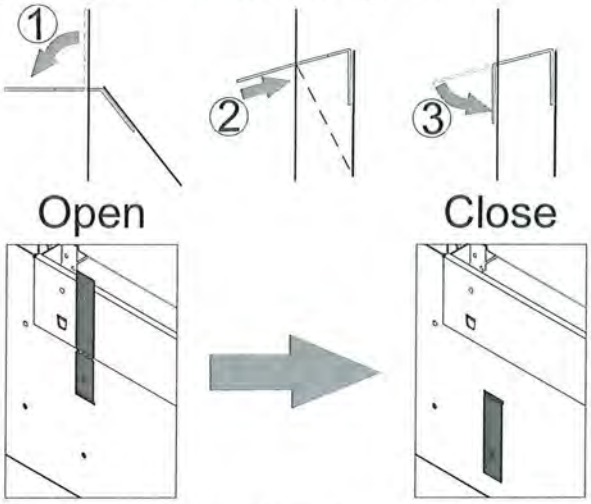

6. Then remove the 2 screws in the chassis (shown circled below) and remove the side brackets (shown shaded below) by pulling them in towards the centre of the fire.

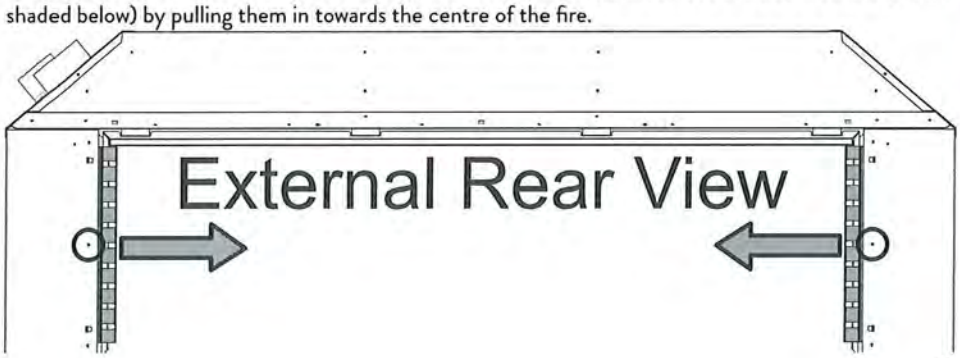

7. Unscrew the 1/4 turn fasteners and allow the panel to lean forward so you may lift the panel out.

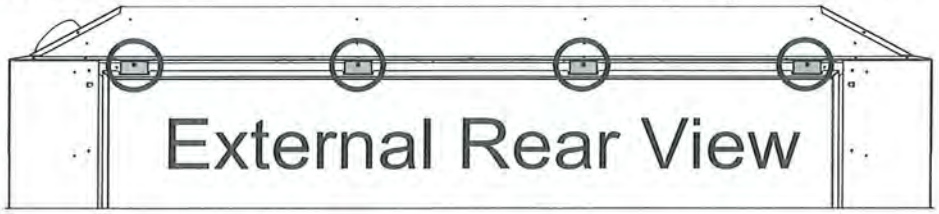

Note: if needed, you can relocate the diagnostic bracket as shown in step 3 of section E4.

9. After Removing inner panels and rear firebox panel. Fix the top trim in place with the two black machine screws provided (black circles - see below).

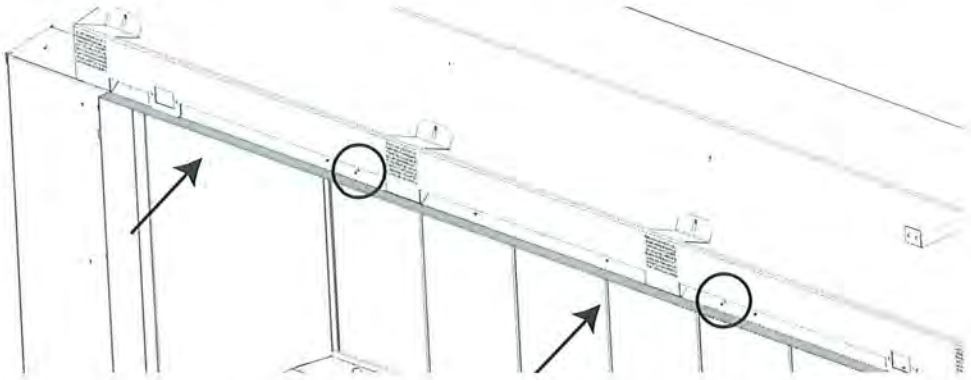

10. Once the top trim is in place, fit the side trims. These are fixed top and bottom with the low profile black self tapper screws. (see below)

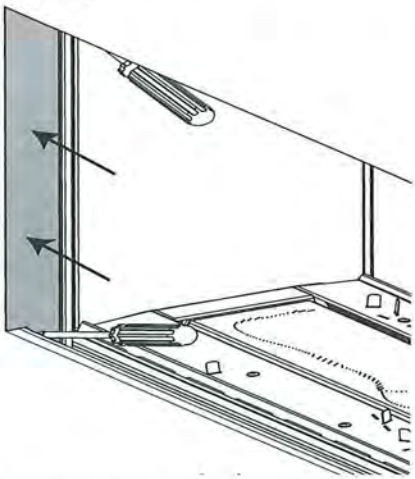

11. Install the fuelbed media and 2nd piece of glass. Finish the conversion by installing the rear glass back in place followed by the bottom trim bracket.

E4 Front to Back Conversion

1. Follow section E5 and E6 to remove the glass, infill, and burners.

2. Remove the rear panels by following steps 2, 3, 4, 6 & 7 from section E3 above.

3. Relocate the diagnostic bracket to the opposite side of the appliance by carefully removing the middle screw and feeding it through to the opposite side of the fire (as shown in the diagram below). Note: this step must be completed after preparing the other side of the appliance for either a LH to RH conversion or a double sided conversion.

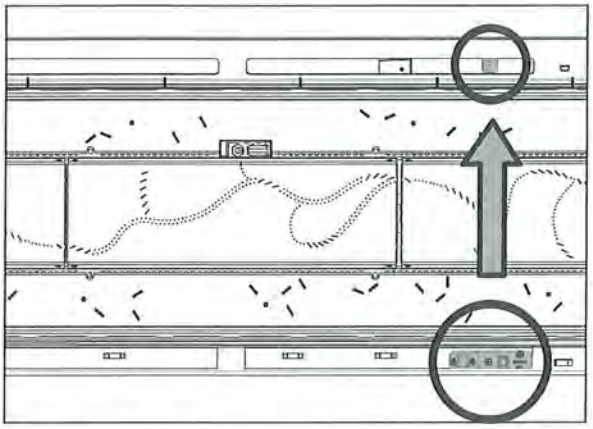

4. Carefully remove the bracket in step 2 of section E3 and replace the bracket to the other side of the firebox.

5. Remove the bottom, side and top trim brackets from the front and replace to the rear of the appliance (see steps 9 to 11 fron section E3 for more info).

6. replace all the rear panels (removed in step 2) to the front of the appliance.

7. Using the diagram from step 5 in section E3 above, change the position of the four tabs on the original front side from closed to open.

E5 Removing (and replacing) the Glass

Remove the glass by unscrewing the four 1/4 turn fasteners located at the top of the glass (shown in the diagram below) and remove the bracket (shown below shaded grey). Allow the glass to lean forwards and carefully lift out.

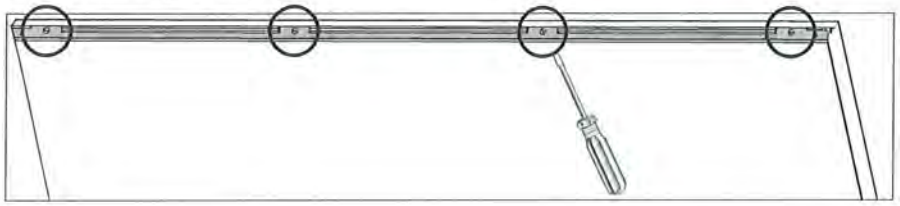

E6 Remove the Infill & Burners

Remove the four screws shown in the diagram below. Lift one end up of the infill into the top corner of the firebox and then out towards you, taking care not to scratch the firebox paint and reflective panels. Remove the outer burners first by sliding them away from the centre of the fireplace, followed by the centre burner.

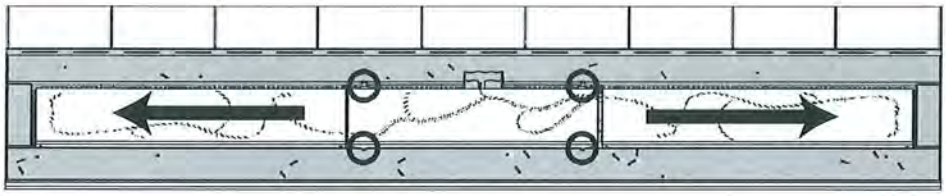

NOTE: After any conversion **AIRFLOW MUST NEVER** be coming up the glass from the bottom, **ALWAYS EXITING FROM** the top of the glass.

E7 Gas Type Conversion

THIS APPLIANCE IS CONFIGURED TO OPERATE ON NG.
If gas type conversion is not required then skip to the next section.

Your gas fire has been supplied with the necessary parts for gas conversion. Follow the steps on the following page to change from NG to ULPG/Propane or vice versa.
WARNING: The regulator that is supplied with the fire MUST NOT BE REMOVED.
Removal of the regulator, or replacing it with one not intended for use with this Escea fire, will void the limited appliance warranty.
Turn off power and gas first.

Step 1: Remove the 8 screws on the controls tray (shown shaded in the diagram below).

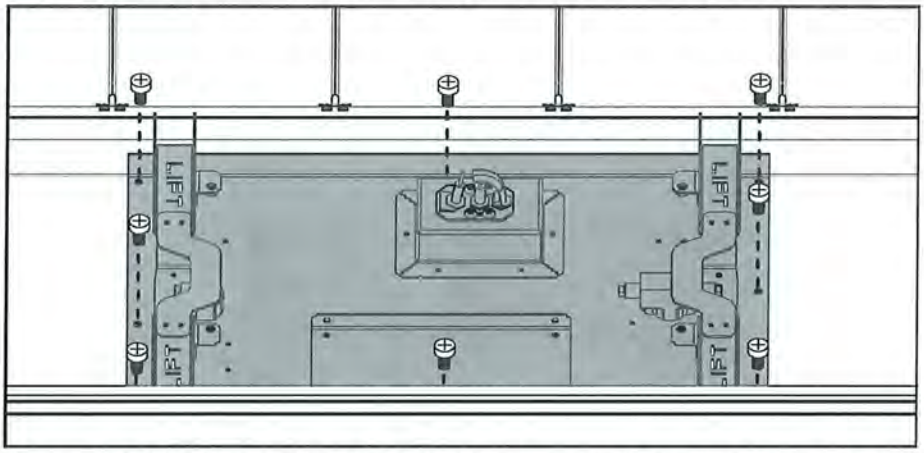

Remove 'engine' by lifting up and to the right. This is still connected internally to the gas hose and power cables.

Step 2: Change the three main burner jets with the jets supplied in kitset (see table on next page).

Step 3: Replace the pilot jet (see table below). Note: Ensure the pilot jet is joined up to to the olive before inserting the jet into the pilot assembly (as shown below).

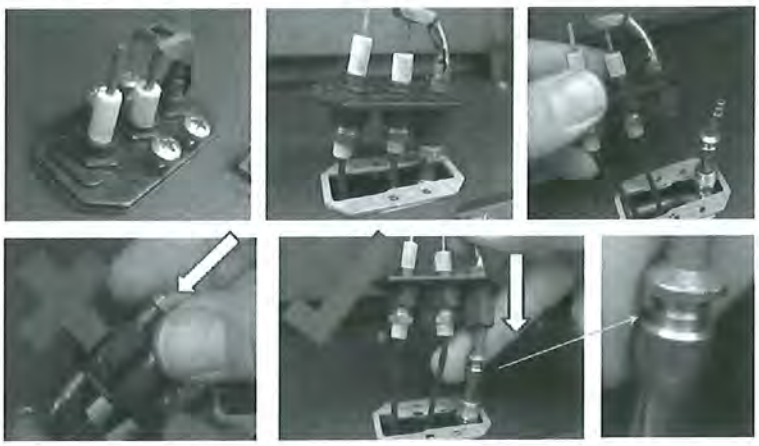

DS1400			
Gas type	**Middle Burner Jet Size**	**Side Burner Jet Sizes**	**Pilot Jet Size**
NG	Ø1.95 mm	Ø1.7 mm	#37
ULPG	Ø1.25 mm	Ø1.02 mm	#27
Propane	Ø1.3 mm	Ø1.02 mm	#27

Step 3: Screw out the nylon adjuster screw inside the regulator to remove the existing spring. Replace the spring with the purple spring supplied in the conversion kit and reassemble the regulator.

Step 4: Cover the existing gas type label with the new gas type label supplied in kitset. Ensure serial number and date of manufacture are still visible. Write your name, company (if appropriate) and date of conversion on new label with permanent marker.

Step 5: Place engine back into firebox. Take care not to pinch any wires.

Step 6: The burner tubes on the underside of all burners have convertible aeration collars. Ensure the aeration collars on all burners are correctly fitted on each burner tube.

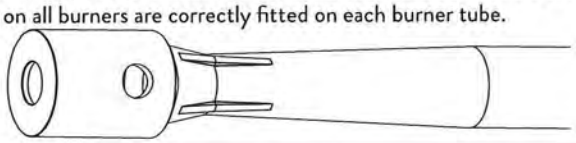

DS1400		
Gas Type	**Middle Burner Collar**	**Side Burner Collars**
NG	1 x Ø6mm Hole	1 x Ø3.5mm Hole
ULPG	1.5mm Spacer	2 x Ø8mm Holes
Propane	2 x Ø13mm Holes	2 x Ø7mm Holes (grooves)

Step 7: Adjusting the electronic controller for gas type



Ensuring the gas is still OFF, Turn the power ON.
On the remote control, insert the new "AA" size batteries. You should now see the time on the display showing 0:00
Press the MINUS (4), PLUS (8) and FAN BOOST (7) buttons simultaneously (as shown right) until the characters "03" light up on the display. Release the buttons and the remote will count down and display "GO". The screen will then display all characters. This will put the remote into test mode and the two big temperature digits should begin counting from 0 to 99 repeatedly.

Now hold down the "Edit Timer" button and "Activate Timer" button simultaneously, the remote display will show the current configuration of either "NG" for Natural or "LP" for ULPG/Propane. To change this configuration, hold down the same 2 buttons "Edit Timer" and "Activate Timer" simultaneously for 5 seconds. This will now have toggled between gas types.
Once you are have chosen the correct gas mode, simply press the "⏻" power button once to exit this diagnostics mode.

E8 Operating the Appliance

Turn on the fire by pressing the "⏻" power button the remote and within a few seconds the appliance will begin its startup sequence, with a 15 second purge of the flue fan. After purge it will attempt ignition. It may take a few attempts to light the first time due to air in the gas line. You may wish to purge the gas line at the valve by bleeding the first test point. This requires a small blade screwdriver.
Once the fire has lit the pilot and main burner you will be able to measure the operating pressure. Set the remote temperature to 40deg by pressing the "+" button and ensure the remote is kept in a cool environment. This will allow maximum gas flow into the appliance.
Ensure all other gas appliances within the house are also operating at maximum.
If the operating pressure does not read within 5% of the table (shown on the next page) then remove the cap from the gas pressure regulator within the appliance and adjust the threaded spring stop.
Press the "⏻" power button again to shut down the fire.

E9 Checking the Gas Operating Pressure

Note: ensure the thermostat control within the remote does not cause the flame to modulate down by increasing the set temperature and keeping the remote in a cool environment

Turn on the gas. Turn the power on.

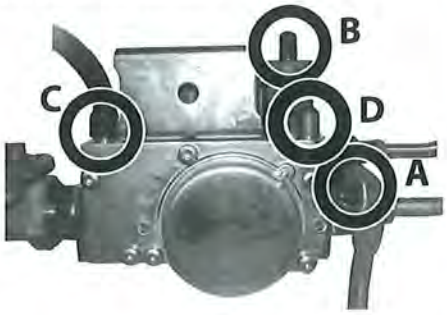

Check the inlet pressure upstream of the appliance using the test point that you installed earlier.
Note: The regulator that is supplied with the fire MUST NOT BE REMOVED. Removal of the regulator, or replacing it with one not intended for use with an Escea fire, will void the limited appliance warranty and may be dangerous.
The gas valve is shown right with Manometer test points at A, C and D.

Gas Pressure Table - DS1400	Gas Type		
	ULPG (NZ)	Propane (AUS)	Natural Gas
Minimum Inlet Pressure - Pre-Regulator	2.75 kPa	2.75 kPa	1.13 kPa
Maximum Inlet Pressure - Pre-Regulator	5.0 kPa	5.0 kPa	5.0 kPa
Operating pressure - Post-Regulator (Point C)	2.3 kPa	2.3 kPa	1.0 kPa
Operating Pressure when on high - (Point A or D)	1.68 kPa ±5%	1.98 kPa ±5%	0.82 kPa ±5%
Operating Pressure when on low - (Point A or D)	1.04 kPa ±5%	0.93 kPa ±5%	0.4 kPa ±5%

Remove the small access hatch found ontop of the engine.
Loosen test point C (shown in diagram above) and attach a manometer tube in preparation for measuring the operating pressure—post regulator.
Turn the fire on high and adjust the operating pressure at the regulator (shaded grey in the diagram below)

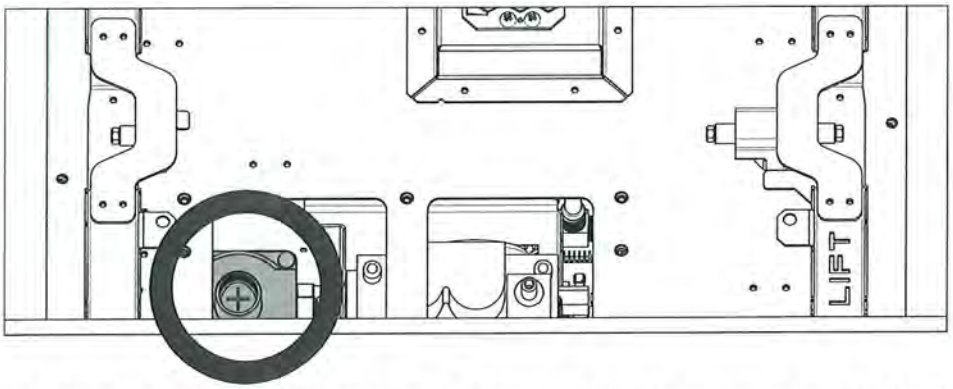

Once the operating pressure—post regulator—is set, check the operating pressure at test point A or D (shown in the first diagram of this section).

Changing the Operating Pressure from the Remote

The following instructions **must only be undertaken by a suitably approved person.** Any tampering by an unauthorised person will void the product's warranty and may result in a dangerous condition.



While the remote is in its "OFF" mode with only the time showing on the display, press the MINUS, PLUS and FAN BOOST buttons simultaneously (as shown right) until the characters "03" light up on the display. Release the buttons and the remote will count down and display "GO". The screen will then display all characters and should be reading 00. This will put the remote into test mode.

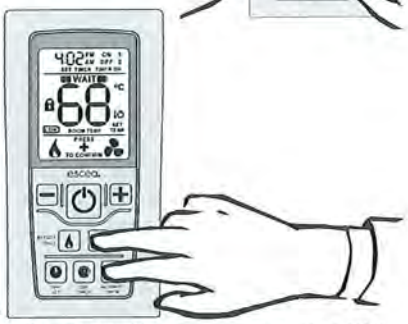

Whilst in test mode: press and hold the "Activate Timer" and "Fan Boost" buttons for 4 seconds to access the gas valve settings. The appliance will automatically turn on while in this mode.

WAIT; allow the appliance to fully light all burners before continuing.



The high setting for the currently set gas type is displayed first (indicated in the clock segments at the top). Pressing the plus or minus keys will change the setting up or down respectively and change the gas pressure measured at point A or D. The large digits will blink rapidly after the setting is made until the verification is received from the fire.
Note: the numbers displayed on the remote should only be used to achieve the correct pressure. The numbers by themselves don't represent anything and should not be relied upon.

Toggling to the low setting is done by pressing the "Flame Effect" button (indicated in the clock segments at the top and by the "Flame Effect" icon at the bottom). Settings are made with the Plus Minus buttons as above. Exiting this mode is by pressing the on/off button.

E10 Auxiliary On/Off button

The auxiliary on/off button is used to turn the fireplace on without the Remote Control, and also used for "teaching" the fireplace to listen for new remote controls. For information on teaching a new remote control, see section S4 of the service manual at the end of this document.
To access the auxiliary on/off button, remove the bottom trim bracket by lifting the bracket upwards (as shown in the diagram below).

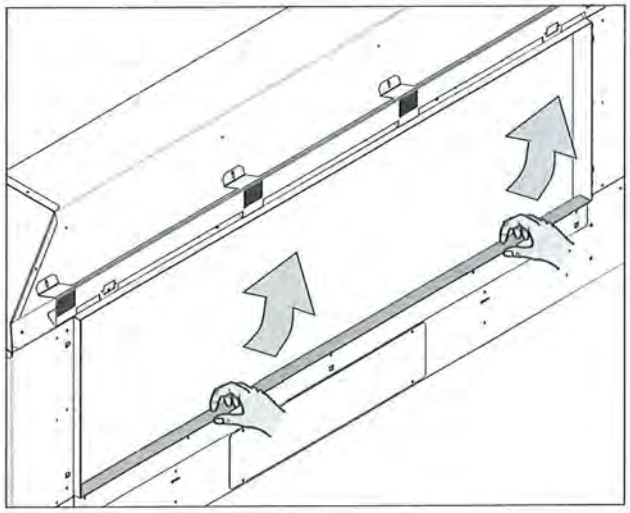

The AUX button location can be seen in the diagram below.

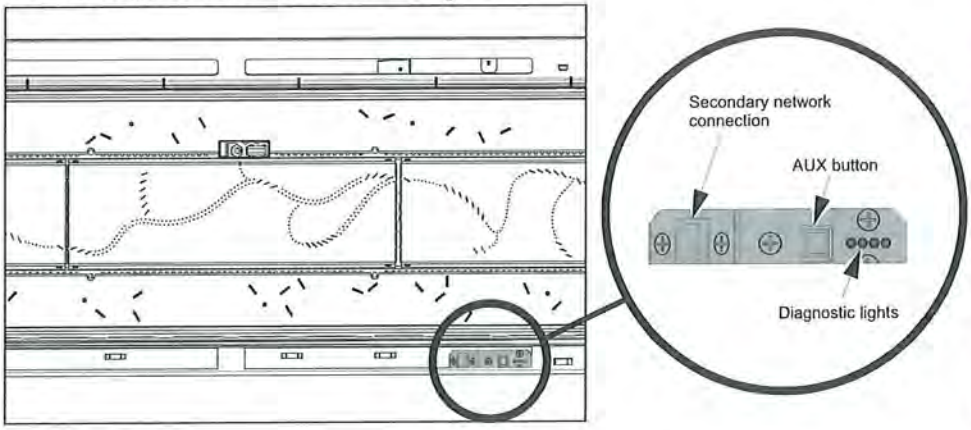

E11 Home Automation Setup

Escea D-Series fireplaces have a simple interface for connection to a home automation system. Simply put this allows the fireplace to be woken up and started and then shut down. The "Close to wake" connection shown is essentially taking one of the 3.3 volt DC pins on the fireplace micro controller and pulling it down to ground. In order to isolate the fireplace from the automaton system a relay needs to be used as shown. This allows you to use any nominal voltage to drive the relay while keeping the fireplaces 3.3V supply isolated.

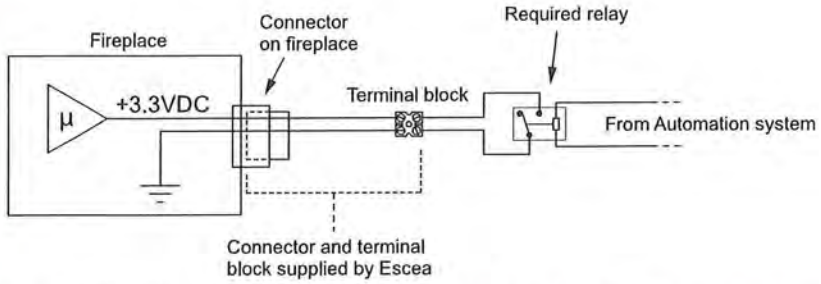

Note: you will need to match the relay coil voltage with the voltage from your automaton system.

The home automation connection can be found in your fireplace accessory pack and is shown to the right.

This connects to the fireplace via the lower RH outside panel of the fireplace, next to the primary network cable access point, as shown in section D3.



Home Automation Operation:

Relay closed
The fireplace will start in a medium setting until it receives a signal from the remote control unit (up to 4 minutes). Once the remote has communicated with the fireplace it will turn on and begin operating the fireplace thermostatically. The remote will use whatever temperature the user has previously set and cannot be altered by the home automation system. The fireplace will continue to operate while the relay is closed.

Note: If the fireplace cannot communicate with the remote controller within 10 minutes of the relay contact closure then the fireplace will shut down and return to standby. The remote controller is required to be operating within range of the fireplace for its safe operation.

Relay open
If the fireplace was operating with a closed relay then upon opening the relay contacts the fireplace will shut down and return the remote controller to its standby mode when it next updates (up to 4 minutes). While the relay is open the fireplace will be in standby mode and available for manual operation by the user.

END OF SECTION E

By the end of this section, you should have:

- ☐ The appliance installed in the cavity
- ☐ The appliance fixed to the cavity base and wall lining
- ☐ The appliance plugged into a mains electricity supply
- ☐ The appliance gas supply attached and pressure tested with all other gas appliances running

F Finishing the Installation

F1 Coal, Crystallite or Driftwood Fuelbed Installation

If using the crystalight, coal, or driftwood fuel beds, first place all the Crystallite/Coal pieces in a single layer atop the Burners and Fuelbed Tray. Cover the entire area except for the pilot shield, ensuring coverage right up to both glass windows and rear of firebox for single sided.
If the Driftwood fuelbed style has been chosen, follow the above directions for placing the Crystallite and then place the Driftwood pieces randomly atop the Crystallite layer. Ensure the wood pieces are spread out across evenly and not over the pilot assembly.
Do not heap or mound any fuelbed.

F2 Log and Woodland Log Fuelbed Retainer Setup

When setting up a log or woodland log fuel bed, you must have the correct retainers present before assembling the fuel bed. The correct retainers are supplied with the fuel bed packaging.
First remove the infill by following section E6. On the **UNDERSIDE** of the Infill you will see numbers 1 to 4 (see left image below). On your retainers you will see a number and a letter, the number is used to match with the infill and the letter is fuelbed type i.e. W = Woodland, L = Logs.

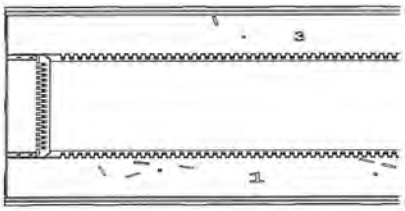



Fold **ALL** the retainer tabs 90° away from you when reading the number and letter on the top face (above right). Assemble all retainers by feeding the tabs, from the **UNDERSIDE (Unpainted)** through the cutouts on the infill and fix in place with screws provided. (see below)

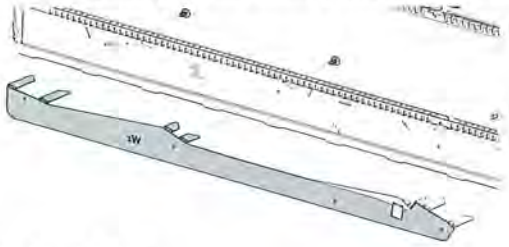

F3 Log Fuelbed Installation

Logs must be located correctly as stated/depicted in this section.
The final layout should replicate the picture shown in Step 3. Place the ember flakes in a single layer evenly after the logs have been located correctly (excess flakes should NOT be added if one even layer has been achieved) . The flakes must not cover the pilot or pilot guard.
Note: Improper positioning of any fuelbed media may create carbon build-up and will alter the unit's performance. Malfunctioning due to improper fuel media placement will not be covered under warranty.

Log Index



Use the index above as a guide for selecting the correct logs.

Log Setup

Step 1:



Step 2:

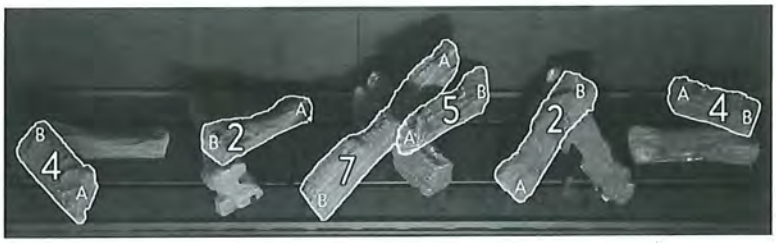

Step 3:



F4 Woodland Fuelbed Installation

Woodland Log Index

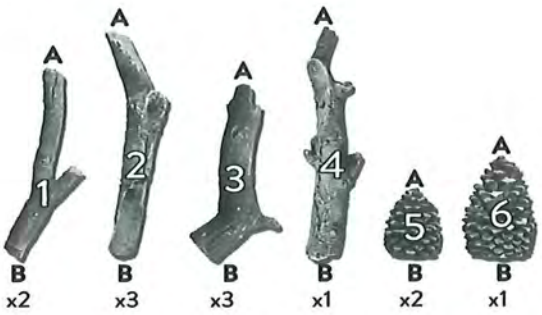

Use the index above as a guide for selecting the correct logs:

Log Setup

Step 1:



Step 2:

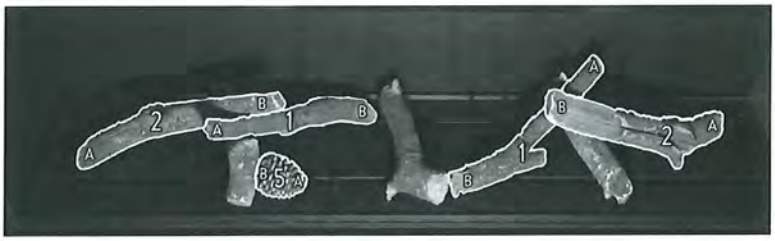

Step 3:



F5 Flame Picture

An abnormal flame pattern will look long and stringy and may cause soot to build up inside the firebox.



An abnormal flame pattern will likely be the result of incorrect settings (jet size, burner aeration collar), you must check these are correct before proceeding. If an abnormal flame pattern is still present, please contact Escea.
It is the responsibility of the installer to ensure a correct flame pattern.

F6 Wall Linings

Only after all applicable sections before this have been completed, can you commence with the final wall linings.
The appliance must be installed prior to and behind the finished wall surface. Take into account any plaster board, tiles or any other finishing surface that may be intended for the finished wall surface. Wall finishing materials must not encroach upon the minimum cavity clearances given in previous sections. The wall board that lines the outside of the opening can be normal plaster board and does not need to be non-combustible. The Plasterboard is to protrude beyond framework as shown in the following diagram.
Note: The final wall lining must not encroach within the specified dimensions in this section. These dimensions indicate the opening required in the wall lining.

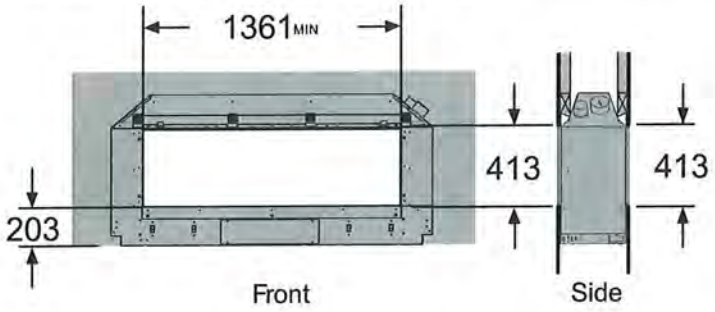

Note: The wall lining directly above the appliance will get warm and hence may discolour paint finishes that are susceptible to temperature damage or distort vinyl wall coverings. For durability of finishes and surfaces you should contact the relevant manufacturer for their specification and avoid materials with temperature ratings less than 80deg C.

The wall lining can be fixed to the gib fixing bracket (shaded below). There are four areas on the bracket (circled below) that can be used for fixing screws.

Frameless

If not using a fascia, ensure the edge of the wall lining is finished in a tidy manner (for a nice Gib finish we recommend Gib Rondo stopping bead).

Note: a 20mm or less wall lining must be used when installing a DS1400 fireplace **without** a fascia. For wall linings of a total thickness of 10mm or larger, a "Linear Trim" may be purchased to cover any exposed wall lining. A 9mm wall lining is recommended for ease of installation.

Bevelled Lite Fascia

If using a (Bevelled Lite) fascia, cutouts will be required in the finished plaster board to allow for the fascia securing pins to attach to the appliance.
Note: that a 15mm or less wall lining must be used when installing a DS1400 fireplace with a Bevelled Lite fascia, as this is the maximum distance the Bevelled Lite fascia can sit off the front face of the fire as shown. For wall linings of a total thickness of 10mm or larger, a "Linear Trim for Bevelled Lite" may be purchased to cover any exposed wall lining.

Linear Trim

For 10mm-20mm wall linings, an optional "Linear Trim" can be used to cover any unwanted exposed wall lining and/or act as a slimline fascia.

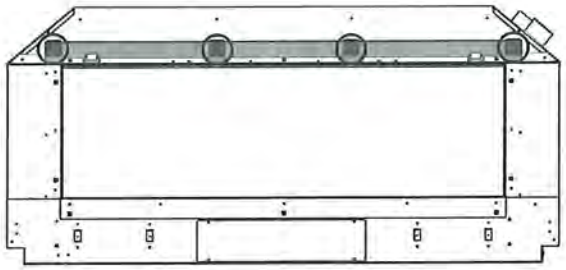

F7 Fitting the Fascia

Bevelled Lite

To avoid scratches or knocks to the fascia panels of this heater they must be fitted at the complete conclusion of the installation process, after wall linings are in place.
Note: Never ever rub the fascia.

Step 1: Ensure the plastic spacer is placed on the thread of the studs.



Step 2: Screw and tighten the 2 studs with spacers onto the back of the fascia.



Step 3: Rivet the 2x spring clips onto the bracket on top of chassis of the appliance as shown



Step 4: After the 10-15mm thick wall has been finished, the fascia clips onto the appliance as shown. Note: wall linings larger than 10mm may require the 'Linear Trim' available from your local dealer to hide any exposed wall lining.



Linear Trim

To install the Gib Trim onto the DS1400, Hook the bottom edge over the bottom trim first and push the top edge up and flush with the wall cladding.

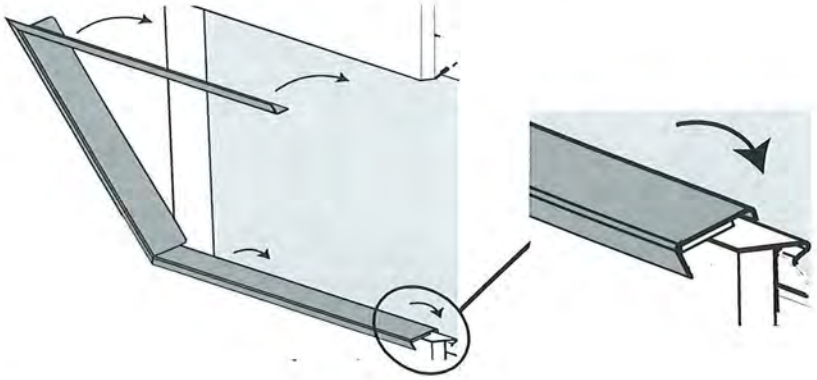

F8 Locating Wall Mount Cradle for Wireless Control

The appliance's remote contains the thermostat that will sense the room temperature and communicate this back to the heater via radio frequency.

A wall mount cradle has been provided for the wireless control and where possible the control should be housed in this cradle.

The location of this cradle should be decided by taking into account the following factors:

- ☐ Simple, convenient access for the user
- ☐ Away from air flow and drafts through the room
- ☐ The parts of the room that people are likely to spend time
- ☐ Away from direct sun light
- ☐ A suitable distance away from the heater
- ☐ Ideally 1.2m to 1.5m from the floor



The radio frequency signal will go through some walls but for best results Escea suggest that the cradle position is less than 10 metres away from the heater.

The best height off the ground to locate the cradle is about chest height. This gives a good average room temperature and easy access for the user.
Please ensure that cradle is screwed firmly onto the wall using the screws provided.

F9 Operating the Appliance

If you haven't done so already, insert the supplied "AA" size batteries, being careful of the polarity. You should now see on the display of the remote the time showing "0:00".

To turn the fire on, press the "POWER" button once, and within a few seconds the appliance will begin its startup sequence.
NOTE: The appliance begins its startup with a 15 second pre-start purge, where the combustion fan runs on its own to clear the firebox before it tries to ignite. During the pre-purge the remote will alternately show the remotes "Set" temperature and a rotating segment indicator to show that the fire is in start up mode and will try to ignite.

When the appliance has lit, set the room temperature by pressing the 'plus' or 'minus' buttons repeatedly until the display is showing the desired temperature. The remote will then revert back to the 'current' room temperature 30 seconds after making the change.

Run the appliance on full for an hour with the windows and doors open in the dwelling. This will ensure any running-in smells have the chance to dissipate.

The appliance is turned off by pressing the "POWER" button once more. The remote will display the time only.

Run the appliance again and check the operation of the thermostat by increasing and reducing the set temperature. Check the Flame Effect function and the Fan Boost functions work correctly.

For further operation instructions please refer to the User Guide.

F10 Normal Operating Sounds and Smells

Note: Each time the fire is lit from cold the glass may fog up with condensation. This is normal and the condensation will disappear within a few minutes once the glass heats up.

Sounds

It is possible that you will hear some sounds from your gas appliance. This is perfectly normal due to the fact that there various types of materials used within your appliance. Listed below are some examples. These are all normal operating sounds and should not be considered as defects in your appliance.

Fan:
Escea gas appliances use electric fans to push heated air into the room. It is not unusual for the fan to make a "whirring" sound when ON. This sound will increase or decrease in volume depending on the speed setting of your fan.

Gas Control Valve:
As the gas control valves turn ON and OFF, a dull clicking sound may be audible, this is the normal operation of a valve. When the fire is switched off after being run for a while, there may be popping and fluttering noises as the residual gas in the burners burns away. These are normal and should be no cause for concern.

Unit Body/Firebox:
Different types and thicknesses of steel will expand and contract at different rates resulting in some "cracking" and "ticking" sounds being heard throughout the heating and cool down processes.

Smells

The first few times the unit is operated, the unit may release an odour and the flames will appear orange caused by the curing of the paint, the burning off of the starch in the gas logs and the oils in the metal. This is a temporary curing process which will disappear with use.

A deposit on the inside of the glass, caused by the starch in the logs, may appear as a build up after several uses. If this film is not removed, it will bake on and may become difficult to remove. When the glass is cold, remove it (see section E5) and clean the inside with a non-abrasive cleaner.

DO NOT ATTEMPT TO CLEAN THE GLASS WHILE IT IS HOT.
UNDER NORMAL USE, NEVER OPERATE THE UNIT WITH THE GLASS REMOVED.

G Installation Checklist

Go through the following checklist to ensure you have installed the appliance correctly

- ☐ Correctly sized cavity to suit your fascia and flue configuration
- ☐ Correct clearances to combustibles
- ☐ An electrical isolating switch to the appliance, accessible after finished installation
- ☐ Correctly sized gas supply with a pressure test point, ensuring adequate supply with all other gas appliances in the dwelling running
- ☐ Gas type conversion process carried out if required
- ☐ A weather-tight installed Horizontal or Vertical Powerflue Terminal with clearance as speci fied by AS/NZ5601.1
- ☐ If chosen, reasonable access to the outside face of the Horizontal Powerflue Wall Terminal for maintenance purposes and flue attached to the rear of the Horizontal Powerflue Wall Terminal leading back to the appliance (and similar for Vertical Powerflue Terminals)
- ☐ The electrical cable from the Powerflue Terminal attached correctly and run back to the appliance cavity in an electrically safe manner
- ☐ The appliance fixed to the cavity base
- ☐ The appliance plugged into a mains electricity supply
- ☐ All gas joints and pressure points leak tested, and suitable leak detection solution and drop tests completed on gas pipework
- ☐ Fuel bed correctly installed
- ☐ Glass correctly fitted
- ☐ A fitted fascia
- ☐ Operated the fire and verified that it lights reliably and safely
- ☐ Appliance functions checked, including thermostat operation, Flame Effect and Fan Boost
- ☐ Data label marked up with correct gas type, and dated by installer if converted during installation
- ☐ Home-owner shown how to operate the appliance correctly
- ☐ Warranty card filled in with installer details and appliance serial number
- ☐ User Guide made available for end user
- ☐ Plumbing Industry Commission Compliance Certificate given to end user

S Service Manual

IMPORTANT:

- This appliance must be serviced every 12 months.
- Any service operation should be carried out only by a suitably qualified and trained person.
- Gas and electricity supply MUST be isolated before any service operation is carried out on this appliance.
- This manual should be left with the appliance.
- DO NOT MODIFY THIS APPLIANCE.

S1 Annual service procedure

- ☐ Isolate power and gas supply to fire.
- ☐ Remove front glass and clean inside of glass.
- ☐ Remove fuel bed and brush off any soot.
- ☐ Clean electrode and pilot hood of any carbon build up and ensure correct gaps between electrode and pilot hood
- ☐ Remove burners and blow compressed air through the burner ports.
- ☐ Remove jets and clean injector hole with solvent.
- ☐ Vacuum any dust from the cavity that houses the fan and from the underside of the fire box around the valve and solenoids.
- ☐ Test all joints for gas tightness.
- ☐ Reassemble heater and check that operating pressure is correct.
- ☐ Check glass sealing tape and replace if necessary.
- ☐ Check to make sure that flue system is intact and not in any way blocked.
- ☐ Trial heater with several start/stop cycles and trial fan-boost, flame effect only and thermostat modes to ensure that all modes function correctly.

To access the product data plate, first remove the fireplace glass, any fuelbed media, the burners and the firebox base. The data plate is located underneath the controls tray (step 1 of section E6).

S2 Error Codes

This gas fire has been designed to show error codes to help explain and identify any fault situation that occurs. These codes will appear on the wireless remote control in the form of a large letter "E" with a number beside it. Codes can normally be reset by turning the heater off then on again at the wall.

The following table shows what each code means and possible ways to rectify the situation. In the case of persistent or repeated shutdown errors, action must be taken immediately to find and repair the fault.

Error Code	Suggested action
 Electronics Over Temp	• Excess lint and dust build-up on the PCB / Controller. • Possibly fascia panels installed incorrectly resulting in restricted air flow. • Ensure correct gaps are present around glass. • Room air fans may be slowed or stalled. Remove firebox, check that fans are plugged in, cleaned, and free turning. Note: This error has a permanent lock out and will require the unit to be reset after the initial error (turning the power to the fire off "at the wall" then on again after a few seconds).
 Flame Failure or Power Flue trip	The fire has tried to light three times and failed. • Check gas supply and check other gas appliances to see if they are affected. If you have two separate LPG cylinders, switch over to the full bottle or contact your gas supplier. You may need to retry igniting the fire a few times after re-establishing gas supply. • Check correct gas pressure to the appliance with all other appliances running. • Check the electrode placement in relation to the pilot flame. Ensure it is well enveloped in flame as per the diagram in the installation instructions. Ensure no small coals have dropped onto the ignition electrodes between the burners. • Ensure the electrode is not contacting any metalwork including the burners and has the correct air gap. • Check that the electrical power cable between the appliance and the power-flue wall terminal is connected and not damaged.



Appliance Over Temperature Sensor Trip

The bimetallic snap disk mounted on the exhaust collector box has tripped. The possible causes for this could include:

- Possibly fascia panels installed incorrectly resulting in restricted air flow.
- Room air fans may be slowed or stalled. Check that fans are plugged in, cleaned, and free turning
- The regulator being set too high resulting in excess heat build-up.
- The inlet flue not being connected and the appliance drawing warm air from the cavity. Check flues are securely connected at both ends.
- Incorrect Jetting
- Check the red tabs are in the correct orientation, see section E2, step 2.



Valve Solenoid Check Failure

The valve solenoids have failed the pre-ignition test. This is to detect a faulty valve solenoid. However, it is possible a wire has dislodged.

- Check that the connections to each solenoid are secure and in place. It may be that the connections on the ends of the wires need to be tightened a little (e.g. with a pair of pliers) to ensure a robust connection to the valve terminal.
- Disconnect and reconnect the firebox connectors ensuring they are firmly pushed into place.
- It could also be that one of the solenoids on the valve inside the fire has failed. If this is the case the valve will need to be replaced.



Remote Cannot communicate with fire

The remote cannot communicate with the fire. Reasons for this could include:

- The fire being turned off "at the wall" i.e. a loss of power to the fire or the remote is outside of its effective radio frequency range (too far away from the fire). Typical remote range is 1m to 10m.
- Ensure there is power to the fire by pressing the auxiliary on/off (red) button on the fire, then press the on/off button on the remote to clear the error.



Combustion Air Flow Error

- Check whether the pressure switch is activating at startup (there is an orange indicator LED in the control tray). If not check the pressure switch electrical connection is correct.
- Check that the hoses are connected at both ends. Ensure the hoses are not kinked.
- Ensure the pressure switch is mounted vertically and the diaphragm is operational. The black hose should be connected to the low pressure port and the translucent to the high pressure port
- Check that both flues are securely connected at both ends to the appliance and the powerflue wall terminal and that the flue is not damaged
- Check that the fan inside the powerflue wall terminal is running during startup. This fan may need servicing if it is slowed or stalled.

S3 Cleaning the Fuel bed and Glass

ALWAYS USE GLOVES WHEN HANDLING THE FASCIA AND GLASS.
NEVER RUB THE FASCIA.

The outside of the fascias must only be cleaned with a clean damp cloth, dry off after cleaning.
The high temp silver powder coating that is used on Escea fascia parts contains certain amounts of aluminium that when rubbed too hard will oxidise leaving a black smudge that cannot be removed.
Always clean when cold.

This is a service procedure that will need to be carried out whenever soot builds up on fuelbeds and/or inside of glass.
If soot build up becomes excessive or regular then one of the following actions may be required;

- Reset gas pressure, pressure may be too high;
- Reposition fuelbed, check with specific fuelbed instructions for details;
- Clear any blockage from primary aeration port of burner;
- Check flue tube is not damaged or disconnected.
- Check exhaust fan is operating and cowl is not blocked in any way.

S4 Cleaning the Fascia

NEVER RUB THE FASCIA. The outside of the fascia's must only be cleaned with a clean damp cloth, dry off after cleaning. The high temp silver powder coating that is used on Escea fascia parts contains certain amounts of aluminium that when rubbed too hard will oxidise leaving a black smudge that cannot be removed. For stainless steel fascias: we recommend the use of Steel Kleen brand Ezi Wipes. Always clean when cold.

S5 Checking Operating Pressure

See section E7 of this manual.

S6 Replacing a Remote Control

If the wireless control becomes lost or damaged, a new one can be ordered from any Escea retail agent. When you have the new remote, the following procedure needs to be followed to "teach" the remote to only communicate with that fire.



1. Ensure the fire and remote are set to "Off" (only the time is displayed on the remote).

2. While the remote is in its "OFF" mode with only the time showing on the display, press the MINUS, PLUS and FAN BOOST buttons simultaneously (as shown right) until the characters "03" light up on the display. Release the buttons and the remote will count down and display "GO". The screen will then display all characters and should be reading 00. This will put the remote into test mode. Note: if the digits start counting then the remote is already paired.

3. Press and hold the – (minus) button until the two large temperature digits reading 00 start to flash slowly. Release the – (minus) button. The remote control is now ready to be addressed to the fire.

4. Press and hold the auxiliary on/off button on the fireplace for a minimum of ten seconds, or until the two large temperature digits start counting upwards from 00 to 99 repeatedly.

Note: Pressing the red auxiliary button on/off button will start the fire. Once the remote control is counting the fire can be turned off by pressing the red auxiliary button again.

5. Press the large power button in the middle of the remote control to exit the test mode and return to normal operation. The remote should only be displaying the time. Check the fire will start using the remote control by pressing the large power button. Turn it off again using the remote control.

6. The fire is now re-addressed to the remote control.

S7 Replacing the burners

Remove all of the fuelbed, taking care not to damage any or media.

Remove the 4 screws in the infill and lift from the fire box, by lifting one end up into the top corner and then out towards you. Take care not to scratch the firebox paint and lift out the burners.

S8 Serial Number

The serial number for the fire can be found in two places. The first is in the battery compartment of the wireless remote under the batteries. The second is on the data sticker on the chassis under the electronics tray.

S9 Removing or Cleaning Fan

As part of regular service procedure, it is recommended that the fan is removed for cleaning. Dust will build up on the fan rotor and in the cavity where the fan is located. This can be removed by the service person using a hearth brush and a vacuum cleaner.

ISOLATE THE POWER TO THE FIRE BEFORE COMMENCING THIS PROCEDURE.

Screw Locations

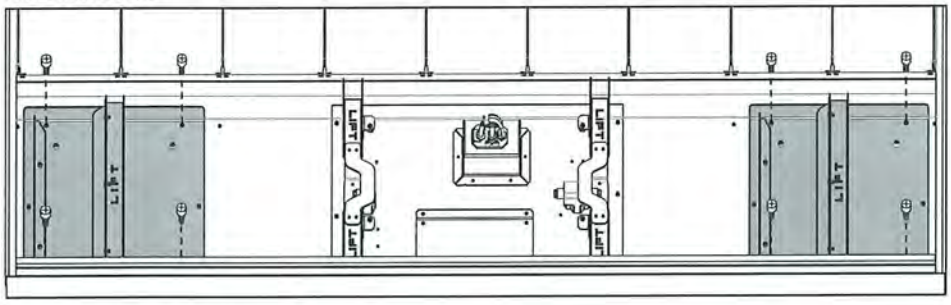

S10 Removing the Control Tray

ISOLATE THE POWER TO THE FIRE BEFORE THIS PROCEDURE.

Refer to Step 1 of Section E6

S11 Pressure Switch Removal

1. With the infill removed, remove the 3 screws in the reflective panel (shown shaded in the diagram below). carefully remove the panel from the firebox.

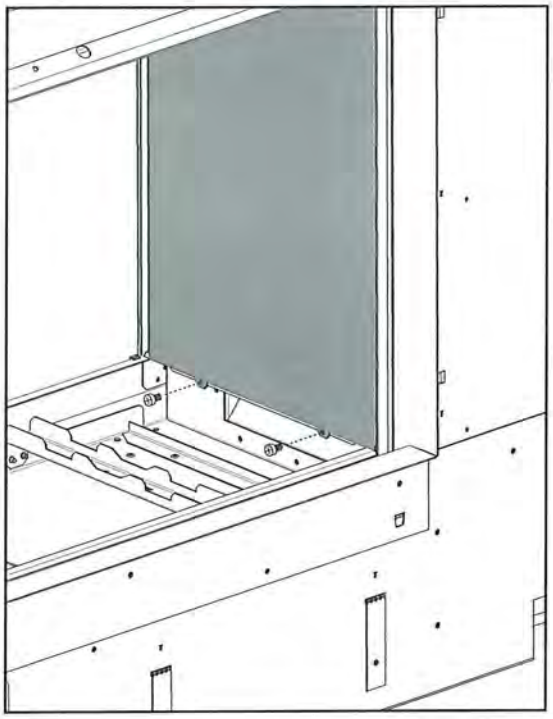

2. Remove the 10 screws (shown in the diagram below) in the access hatch and carefully remove from the firebox.

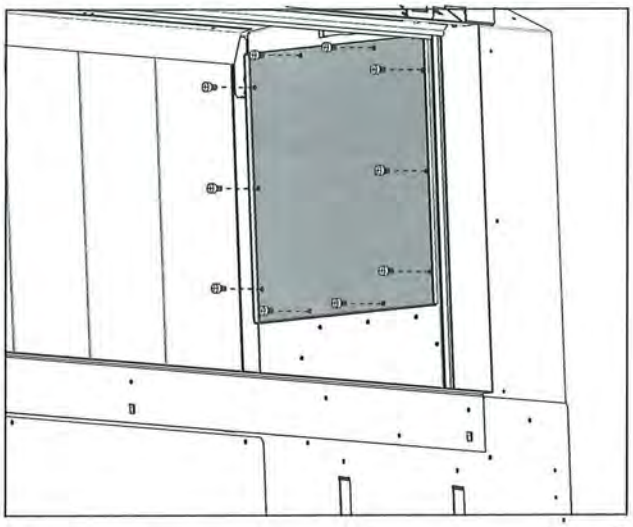

3. Remove the 2 silicone tubes (making note of which tube goes on each spigot)
Disconnect the two wires from the pressure switch and remove the two screws on either side of the pressure switch to remove it from the bracket. The black hose should be connected to the low pressure port and the translucent to the high pressure port



S12 Replacing the Thermal Cut Out

WARNING - Ensure power is turned off before removing any TCO.

There are two thermal cutouts: one in the LH room fan assembly (60°C) and the other attached to the exhaust manifold (120°C).

Exhaust TCO (120°C)

Access to this TCO can be made by following steps 1 to 2 from section S11.

Reach in to the hatch and locate the TCO (circled in the diagram below). The TCO has two wires connected to the main body; remove these. Unscrew the TCO using your hand and remove from the firebox.

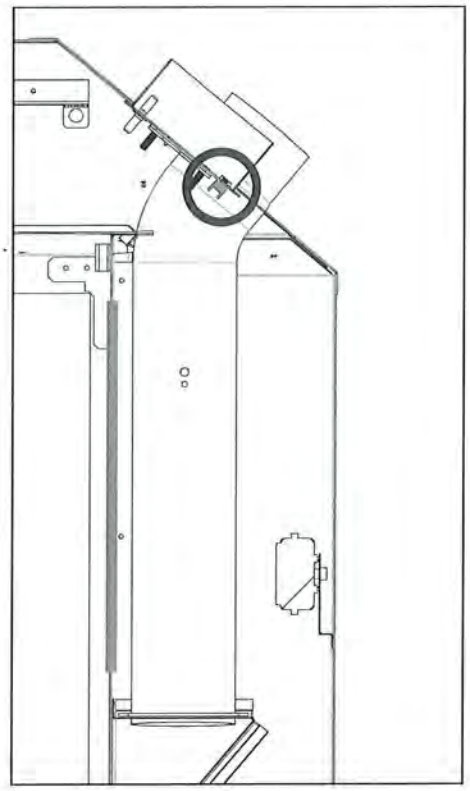

Fan TCO (60°C)

Access to this TCO can be made by following S9 and removing the left hand fan (not exhaust side). Once the fan is removed you will see the TCO (circled in the diagram below). To remove this, unscrew the two visible screws and once free remove the two wires connected to the TCO and remove from chassis.

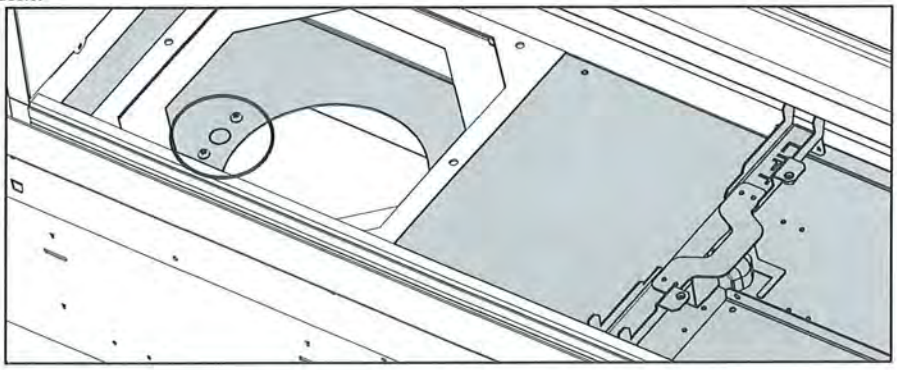

S13 Servicing the Horizontal / Vertical Powerflue

Ensure the power to the Powerflue is off by disconnecting the power to the appliance inside. If the appliance has been running, allow the Powerflue to cool before attempting to service it.

Servicing a horizontal Powerflue:

If the Powerflue needs servicing, the fan can be accessed from the outside of the installation for Horizontal termination, and accessed from within the roof space for Vertical termination.

Undo the screws on the outside of the Powerflue box and separate the two parts, giving you access to the fan inside.

Removing this plate gives complete access to the fan for servicing or replacement. Check that all the seals are still intact. Check the fan electrical terminals, motor and impeller are not corroded. Ensure there is no signs of leakage in or around the terminal.

When reassembling the powerflue, line up the round silicon grommets with the outlet tube of the fan and push the cowl back into place. Ensure all seals are still in place and replace all of the screws to hold the cowl in the correct position.

Servicing a Internal Vertical Powerflue:

If the vertical Powerflue needs servicing the fan can be accessed without disturbing the final twin walled flue length or roof terminal.

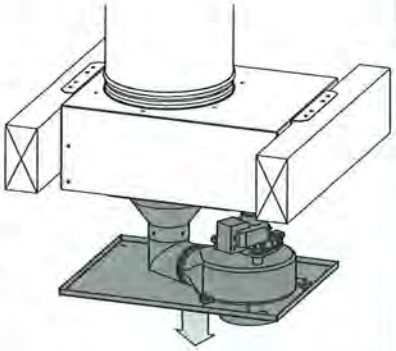

To gain access to the fan and electrical terminals remove the eight screws that hold the base of the Powerflue to the lid, making sure to support the base while removing the screws. Note: When inspecting or working on the Powerflue take care not to damage the two flexible flue pipes that connect to the Powerflue base.

Once the base has been removed clean away any dust or debris found and check that the fan electrical terminals, motor and impeller are not corroded. Also check for signs of leakage in or around the Powerflue.

When reassembling the Powerflue support the base under the lid and replace the 8 securing screws. After assembly check that the two flexible flue pipes are sealed and not damaged and that the twin walled final flue length and roof terminal are still sealed.

Note : Take care not to trap any wires between the base and lid of the Powerflue when reassembling.

S14 Wiring Diagram

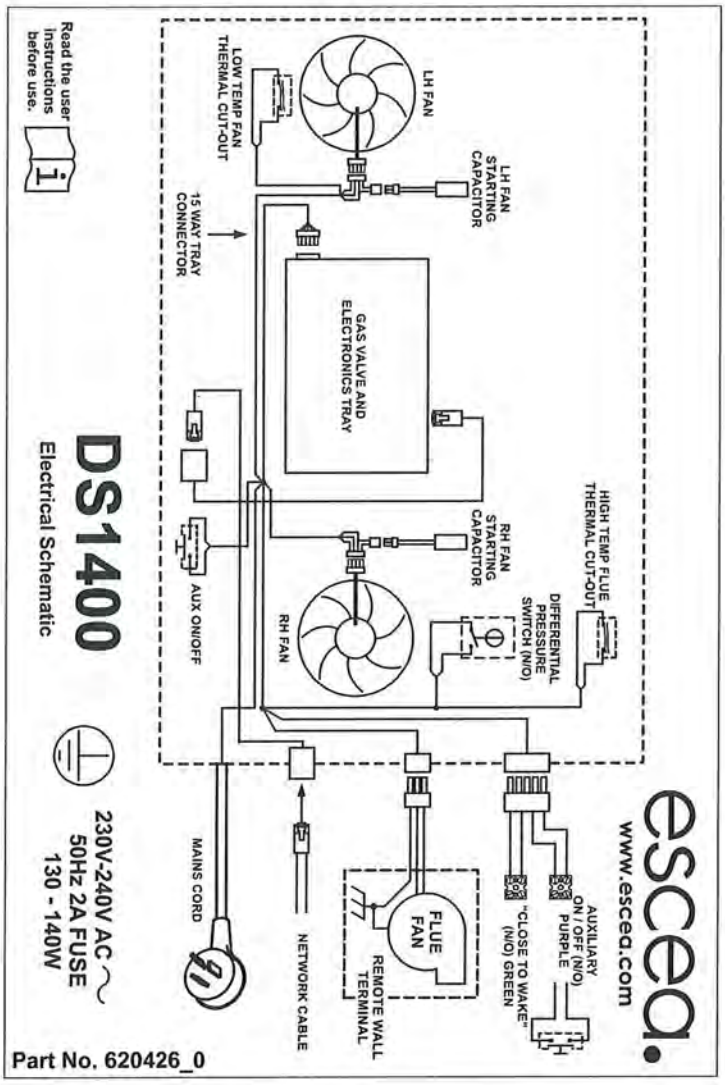

RECEIVED
27 OCT 2017
BY

30041

Hunter Architecture Ltd

PROJECT SPECIFICATION

Dowle Alterations

40 Titoki Road
Waikanae Beach
Kapiti Coast

Issued for Consent

PROJECT OVERVIEW

Scope

New masterbedroom and ensuite from existing games room. New entranceway and roof area to north elevation. New deck and covered roof area to east elevation.

Address

Site Address	40 Titoki Road
Suburb	Waikanae Beach
City	Kapiti Coast
Lot #	3
DP #	386409

Site Conditions

Wind Zone	VH - Very High Wind Speed
Earthquake Zone	Zone 3
Exposure Zone	Zone D - High
Snow Loading Zone	Zone N0

Related Parties

Designer

Hunter Architecture Ltd, Darren Hunter, LBP Design 2 115270, darren@hunterarchitecture.co.nz, 3 Seaview Rd, Paraparaumu Beach, Kapiti Coast, 5036, 04 904 9288

© Smartspec 2017

TABLE OF CONTENTS

Preliminaries & General 4
Project Overview 4
Structural Steelwork 10
Coating 11
Workmanship 11
Structural Steelwork 12
Brickwork 18
Brickwork 18
Carpentry 20
GIB EzyBrace® Systems 21
Weatherboard Cladding Systems 25
Timber Framing 30
Workmanship & Materials 34
Plywood Cladding 41
Roofing 42
Wide Tray Metal Roofing - Fully Supported 42
Gerard Roofs Pressed Steel Tiles 48
Aluminium Joinery 50
Aluminium Windows & Doors from APL - Window Solutions 51
Insulation 60
Thermal Insulation 60
Tiling 62
Tiling 62
Painting & Decorating 71
Resene Interior Surfaces 71
Plumbing 72
Workmanship 73
Materials 75
Systems 75
Elements 75
Drainlaying 77
Workmanship 77
Foul Water Drainage 78
Stormwater Drainage 85

© Smartspec 2017

1 PRELIMINARIES & GENERAL

1.1 Project Overview

1.1.1 Contract Documents

The Contract Documents are complementary and comprise this Specification, the accompanying drawings, the NBC (National Building Contract) together with Schedules as specified below, any written documentation clarifications issued during tendering/estimating, any manufacturer/supplier information issued with this Specification, any list of agreed Subcontractors, the contract establishment letter and any other relevant correspondence, and any Site Instructions or additional details or instructions issued as Variations. (The National Building Contract will be emailed upon request).

If the Architect/Designer has not been engaged to administer the Contract or observe the works, then the term Architect/Designer, where referred to in this specification, means Contract Administrator.

These Project Specific Conditions supersede the Standard Conditions where they are in conflict. Refer any ambiguity or apparent discrepancy within or between any Contract Documents to the Architect/Designer, whose interpretation shall be binding on all parties.

Ensure that all Trades are aware of all Conditions and that subcontract prices are accepted on this basis, and in a form acceptable to the Registered Master Builders Federation or the Certified Builders Association. Ensure that all persons engaged on the works are aware of all items in this specification and on the drawings that may in any way affect their section of the works.

1.1.2 Site

Relevant site conditions are believed to be correctly represented in the Contract Documents, however the Contractor (and Subcontractors where appropriate) are requested to inspect the site to ascertain for themselves the nature and extent of the works and the rights and interests that may be interfered with in the execution of the works, as no claims for additional payment will be recognised on the grounds of insufficient description.

1.1.3 Protection

Take all appropriate precautions to protect all third party property, services, etc., and indemnify the Principal against any claims arising from the construction operations. Any damage to third party property caused by construction activities or failure to protect shall be rectified as soon as possible by the person causing the damage, or by appropriately qualified trades-persons employed by the person responsible for the damage if necessary.
Suspend operations during weather which would affect the quality of work in progress. Secure the works as soon as possible against adverse weather, dust and vandals. Avoid structural damage that is caused by overloading.
Adequately protect all finished work and maintain until the date of Practical Completion. Each trade shall protect the work of all other trades, and each trade is responsible for making good any damage

they cause to finished works. Arrange special protection as required for windows and doors, finished timber work, plumbing fittings and hardware, cabinets and other joinery, and similar items.

1.1.4 Responsibility

The Contractor will be held responsible for the full period of his legal responsibility in connection with this Contract for ensuring that all work execution, materials, and fittings, are completely in accordance with Contract requirements.
The Contractor is responsible to the Principal for the appropriateness and fitness, in relation to a reasonable expectation or requirement, of all of the materials and workmanship incorporated into the works by himself or his subcontractors; for this reason few specific guarantees are required in these contract documents. The terms and conditions of any warranty or guarantee required or provided shall not in any way negate the minimum remedies available under common law as if no warranty or guarantee had been furnished.
No apparent expression of the Architect's/Designer's reasonable satisfaction shall be deemed to be acceptance of defective materials or workmanship within the terms of the Contract or to be an authority for any Variation except where such Variation is authorised as provided for in the Contract Instructions that are given verbally are deemed to be instructions for proper execution of the works and do not involve extra charges.

Workmanship in all trades is required to be equal to or better than recognised good trade practice. The Contractor shall provide all necessary setting out information and component dimensions for subcontractors and shall check and be responsible for the accuracy of their work.

Should any tradesperson consider that the surface finish or general conditions of previous work are unsatisfactory to ensure a proper finish for their own work thereon, that tradesperson shall give immediate notice to the Contractor or Architect/Designer as appropriate and shall not proceed until all necessary improvements have been made. Failing such notice the trade concerned will not be relieved of responsibility for a poor finish due to such unsatisfactory condition.
Specialist Finishes Subcontractors are responsible for ensuring that substrates are completely appropriate for them to achieve first class results, and to this end shall, in sufficient time, instruct the Contractor with regard any fixings, primings, sealings or whatever for the substrate that vary in any way from the substrate manufacturer's standard recommendations. The Contractor shall advise the Architect/Designer with regard these variances, and not proceed until the Architect/Designer has agreed to them.

The Contractor and all Subcontractors affected shall be jointly and severally responsible for completion of the whole of the works in a completely watertight condition and shall therefore examine all details to be satisfied that this condition can be achieved. If any detail is considered unsatisfactory the Architect/Designer shall be notified immediately and he/she will then either interpret the detail to the Contractor's satisfaction, or accept responsibility for watertightness at the points in question, always assuming reasonable workmanship.

Ensure that all materials or items incorporated into any particular construction or finish are compatible and that their individual use is approved by the manufacturers and/or suppliers of the other parts of the system.
For all electronic/electrical/mechanical operating systems all work and all necessary materials and

items incidental to the primary item specified, that are incorporated into the works, shall be such as to leave a neat, efficient, easily maintained and robust installation, completely in accordance with all of the recommendations of the primary items' manufacturers. Where appropriate, source all parts of a system from a single supplier or manufacturer.

The Contractor shall make provision for all temporary works and services required for the satisfactory completion of the contract works. The Contractor shall pay all associated costs and fees; carry out all necessary maintenance, alterations and servicing requirements; and remove temporary works and services on completion of the contract works. Temporary works and services shall comply with the requirements New Zealand Building Code.

1.1.5 Specification

This Specification covers contract administration, standards, materials quality, workmanship and the scope of works only: the exact nature of the works and all specialist items, descriptions, etc., are contained on the drawings, which also take full precedence.
All clauses in all specification sections apply to their full extent and meaning to the entire Contract. Trade sections and paragraphs have been introduced into this specification for reference only and it shall not be construed that each trade section is a complete segregation of the materials and labour of that trade. The onus is on all trades to be conversant with any and all clauses which in any way affect their work.
(Be aware that the 'scope' noted in the 'Project Overview', and scope and general extent clauses within this specification, are included to provide a general indication only and must NOT be interpreted as schedules of quantities - the exact nature and extent of all aspects of the works are shown on the drawings).

1.1.6 Standards

New Zealand Standards (NZS), Australian Standards (AS), Joint Standards (AS/NZS), British Standards (BS), Acts of Parliament, Regulations made thereunder, Codes of Practice, and any specific Manufacturer's Instructions or Manufacturer's Recommendations that are referred to in these Contract Documents shall all be deemed to be the latest published edition thereof at the time of drawings issue, and shall be followed by the Contractor and all Subcontractors to the full extent applicable consistent with the intent of this Contract. Documents cited within other cited publications are deemed to form part of this specification.
Where Standards have a number of Divisions, e.g. AS/NZS 3500.1, AS/NZS 3500.2, etc., each of the Divisions relevant to this project is deemed to form part of this specification.
Retain current copies of significant cited documents and manufacturer's technical literature on the site.

1.1.7 Code Compliance Certificate

The Principal will apply for the Code Compliance Certificate (CCC) and any other licenses or approvals for the building to be used. However, Practical Completion will NOT be certified until the CCC inspection has occurred and any additional works required by the local Building Consent Authority have been completed. To this end it is recommended that the Contractor obtains all required certificates, guarantees, Producer Statements, as-built drawings, etc., required for the CCC application as work proceeds, to facilitate application for the CCC as soon as the works are completed. For his

part, the Principal hereby undertakes to apply for the CCC within one day of all required material being in hand. Likewise, the Contractor should have capacity available to attend as quickly as possible to any items identified by the Building Consent Authority as being required prior to the issue of the CCC.

1.1.8 Coordination of the Works

Coordinate the works of all trades to ensure efficient progress of the works. Ensure that all holes, sleeves, penetrations, supports, etc., that are required for services are correctly incorporated as work proceeds. Identify and sufficiently forward-notify the appropriate persons of all deadlines for the supply of fittings, components, information, etc.

1.1.9 Documents Interpretation

Except where they are clearly to the contrary, all dimensions are deemed to be to the bare surface of concrete, masonry, timber framing or other basic construction material. All figured dimensions take precedence over scaled sizes. Where any detail is included in more than one drawing the larger scale detail takes precedence. Where any ambiguity exists refer to the Architect/Designer for interpretation.
The word 'provide' and the word 'fix' used separately in the Documents shall be taken to mean 'provide and fix' unless otherwise stated.
When the term 'allow' occurs in the Documents, except with reference to Monetary Allowances, the cost of the item shall be at the risk of the Contractor.
The terms 'approved', 'directed', and 'selected' when used in the Documents refers to the approval, direction or selection of or by the Architect/Designer. Please give adequate notice of when these decisions are required. 'Architect/Designer' shall mean the Architect or Designer, their representative or any Consulting Engineer engaged by the Architect/Designer.

1.1.10 Work Shown and Mentioned

Work Shown and Mentioned
The Contract Documents show the extent and nature of the works but there is no warranty expressed or implied that they show each and every minor detail or item required to be included by the Contractor. Should any material, structural member, fixing, or item or work appear to be inadequately described, yet obviously necessary for the neat, strong and satisfactory completion of the work, it shall be incorporated into the Contract Works.

1.1.11 Site Safety

Before commencing work on the site, the Contractor shall prepare and submit to the contract administrator a health and safety plan. The health and safety plan shall include, but not be limited to:
- the health and safety of all people on the site and on other properties, and the general public;
- identification of existing and potential construction hazards and risks;
- safety procedures to eliminate, isolate or minimise construction hazards;
- the equipment to be used to minimise the hazards;
- the maintenance of a register of hazards for the site;
- the name and qualifications of the site safety person;
- emergency procedures;

- first aid facilities and safety equipment;
- the methodology for notifying, recording and investigating accidents and injuries.

Carry out all construction operations in accordance with the submitted health and safety plan.

A PCBU's primary duty of care includes, but is not limited to, so far as is reasonably practicable:
- providing and maintaining a work environment that is without risks to health and safety;
- providing and maintaining safe plant and structures;
- providing and maintaining safe systems of work;
- ensuring the safe use, handling and storage of plant, structures and substances;
- providing adequate facilities for the welfare at work of workers in carrying out work for the business or undertaking, including ensuring access to those facilities;
- providing any information, training, instruction, or supervision that is necessary to protect all persons from risks to their health and safety arising from work carried out as part of the conduct of the business or undertaking;
- monitoring the health of workers and the conditions at the workplace for the purpose of preventing injury or illness of workers arising from the conduct of the business or undertaking.

1.1.12 Variations

The Architect/Designer will issue Site Instructions (SI) to amend or clarify the works. Upon receipt of a SI the Contractor shall immediately notify the Architect/Designer if he believes there are price or timing adjustment implications. The Architect/Designer will then issue a Variation Price Request (VPR) for pricing of the possible Variation by the Contractor, within the time stipulated, or within 10 days if no time is stipulated. If the Contractor does not return the VPR within the time stipulated the Architect/Designer will assess it at reasonable rates. Once agreement is reached on price and/or timing a Variation Order (VO) for the item will be issued. Note that works covered by a SI or a VPR must NOT be actioned until the VO is issued.

When a Variation is contemplated and timing does not allow SI and VPR action the Contractor is to advise, and record in the site diary, an estimate of price and timing implications. If accepted by the Architect/Designer, a VO will be issued immediately. The Contractor shall then co-operate with the Architect/Designer to establish agreed pricing.
Claims for Variations neither priced nor estimated prior to being put in hand (but considered valid) will be incorporated into Progress Payment Certificates or the Draft Final Accounts as claimed and accepted but with a proviso allowing 5 (five) days for written objections by either the Principal or the Contractor, to any aspect of them, for further consideration.

The Main Contractor's Variations Margin agreed pre-contract will be the maximum accepted for any trade unless higher rates are nominated pre-contract and are accepted. The Main Contractor's agreed Variations Margin shown shall be deemed to include all preliminary and general costs, overheads, variation processing costs, and profit. If no margin is given, a 5% overall margin will be applied.
Note that 'loss of anticipated profit' claims consequent upon reduction of works extent will NOT be recognised, and that the cost of processing Variations is deemed to be included in the P & G Allowance.

Also note that for Variations pricing all materials shall be charged at the actual net invoiced cost plus margin; i.e. recognised 'Trade Price', volume discounted where appropriate.

1.1.13 Cleaning and Completion

Clear construction debris and rubbish from the works at regular intervals, and additionally if so instructed by the Architect/Designer. Clean each space thoroughly before commencing any finishing works.

In preparation for the Practical Completion inspection carry out the following:
- Clean the works thoroughly, removing all debris, surplus materials, splashes, marks, temporary markings, etc. (All cleaning methods and materials shall be as recommended by the manufacturer of the item being cleaned).
- Remove protective wrappings and coverings unless otherwise directed.
- Touch up minor painting faults, carefully matching colour, and brushing out edges. Repaint any badly marked surfaces back to suitable break-lines.
- Adjust, ease and/or lubricate as required all doors, drawers, controls and other moving parts to ensure their efficient operation.
- Any other works required to leave all spaces ready for immediate occupation and all electronic/electrical/mechanical systems fully operational.
- Clean out all spoutings, gutters, downpipes, and gullies and flush out all drains.
- Clean all sanitary appliances and check all aspects of the water services.
- Thoroughly re-inspect all aspects of the works (and have any defects fully rectified) to be certain that the works are completely ready for the Practical Completion inspection - if an unreasonable number of items are noted by the Architect/Designer during the inspection it will be terminated and then rescheduled for at least a week forward to allow proper completion to be achieved.
(Note that a Code Compliance Certificate must be obtained before Practical Completion will be certified. Obtain all required certificates, guarantees, as-built drawings, etc., as work proceeds to enable the CCC application to be submitted as soon as construction is completed).

2 STRUCTURAL STEELWORK

2.1 Preliminary

Refer to General Conditions of Contract and the Special Conditions in this Specification as appropriate. Read this section in conjunction with all other trade sections.

2.2 Compliance

Comply with the New Zealand Building Code 1992 including all revisions and amendments, Verification Methods where appropriate, and construction principles that are embodied in the Acceptable Solutions.

Comply with all relevant provisions and recommendations of:

1163:2016(AS/NZS)	Cold-formed structural steel hollow sections
1252:1996(AS/NZS)	High-strength steel bolts with associated nuts and washers for structural engineering
14341:2012(AS/NZS)	Welding consumables – Wire electrodes and weld deposits for gas shielded metal arc welding of non alloy and fine grain steels – Classifications
1554.1:2014 (AS/NZS)	Structural steel welding - Part 1: Welding of steel structures
1554.1:2014(AS/NZS)	Structural steel welding - Part 1: Welding of steel structures
1554.2:2003(AS/NZS)	Structural steel welding - Stud welding (steel studs to steel)
1554.4:2014(AS/NZS)	Structural steel welding - Part 4: Welding of high strength quenched and tempered steels
1554.5:2014(AS/NZS)	Structural steel welding - Part 5: Welding of steel structures subject to high levels of fatigue loading
1554.6:2012(AS/NZS)	Structural steel welding - Part 6: Welding stainless steels for structural purposes
1554.7:2014(AS/NZS)	Structural steel welding - Part 7: Welding of sheet steel structures
16834:2013(AS/NZS)	Welding consumables - Wire electrodes, wires, rods and deposits for gas shielded arc welding of high strength steels - Classification (ISO 16834:2012, MOD)
1897:1976(AS)	Electroplated coatings on threaded components (metric coarse series)
21952:2012(AS/NZS)	Welding consumables - Wire electrodes, wires, rods and deposits for gas shielded arc welding of creep-resisting steels - Classification
2312.1:2014(AS/NZS)	Guide to the protection of structural steel against atmospheric corrosion by the use of protective coatings - Part 1: Paint coatings
3404.1:2009(NZS)LOOSELEAF	Steel structures Standard - Materials, fabrication, and construction
3678:2016(AS/NZS)	Structural steel - Hot-rolled plates, floorplates and slabs
3679.1:2016(AS/NZS)	Structural steel - Part 1: Hot-rolled bars and sections
3679.2:2016(AS/NZS)	Structural steel - Part 2: Welded I sections
3750(AS/NZS):Parts 1-23	Paints for steel structures
4600:2005(AS/NZS)	Cold-formed steel structures

4680:2006(AS/NZS)	Hot-dip galvanized (zinc) coatings on fabricated ferrous articles
4781:1973(NZS)	Code of practice for safety in welding and cutting
BS 4360	Weldable structural steels
BS 4848	Hot rolled structural steel sections
BS 6497	Powder organic coatings for steel
NZBC B1	Structure
NZBC B2	Durability

2.3 Coating

2.3.1 Priming

Degrease surface with suitable solvent where required. Power hand tools clean to Swedish Standard 05 59 00 St2. Two coat approved rust inhibitor to 150 micron dry thickness. Make good any priming damaged during erection. Priming to cast in steel only to 50mm into concrete, beyond this leave the steel bare for concrete adhesion.

2.3.2 Painting

All structural steel which is not to be treated otherwise shall be primed before delivery to the site.

Prepare steelwork for painting by removing weld splatter, grinding off all sharp edges, throughly washing with water to remove weld flux residue and dirt, and degreasing with a solvent cleaner, kerosene shall NOT be used. After drying, the steelwork shall be thoroughly power wire brush cleaned and primed with approved primer exactly in accordance with the manufacturers recommendations.

Site touch-up all damaged paintwork, bolts and welds with primer. All paint shall be applied by brushing on to clean, dry surfaces free from rust, scale and grease.

2.4 Workmanship

2.4.1 Scope

The work to be done under this Section comprises the supply of all labour, materials and plant for the fabrication and erection of all structural steelwork and the supply only of sundry metalwork shown or implied on drawings or in this specification.

2.4.2 Workmanship

Steelwork fabrication and welding shall be by personnel qualified and certified in accordance with AS/NZS 1554.1. Confirm all dimensions with the Main Contractor before fabrication. Allow for minimal erection tolerances - excessive will not be accepted. All items true to line and detail, with no welding or shaping distortion. Flame cutting of steel generally unacceptable.

Co-ordinate steelwork with Concretor, Carpenter, and all services subcontractors as appropriate with regard dimensions and setting-out of built-in items and fixings for peripheral elements. Supply and install all associated sundry fixings, weld plates, brackets, etc. necessary to complete the contract. Hollow sections ends sealed with 6mm plate unless noted otherwise.

2.4.3 Fabrication & Erection

All steelwork fabricated and erected in accordance with the requirements of NZS 3404.

All welding to be Category SP in accordance with AS/NZS 1554.1. Butt welds full penetration with seal runs or backing strips. Fillet welds 5mm continuous unless otherwise noted. Welds exposed to weather and welds subject to hand contact shall be finished to a smooth even surface.

Steelwork shall be erected plumb, true to line, square and without strain, and shall be temporarily braced, as necessary, to provide adequate stability during erection.

Dry packing under baseplates shall be undertaken using an approved non-shrink grout, mixed to consistency suitable for the nature of the application. Clean surfaces before grouting, pack the grout tightly, and smooth the edges.

All bolts and fasteners shall be fitted with appropriate washers and shall be thoroughly tightened (to torque settings as recommended by manufacturers). Protruding ends of bolts to be centre-punched against nuts to prevent loosening.

2.5 Structural Steelwork

2.5.1 Scope

Supply, fabricate, install and erect all Structural Steelwork as shown on the drawings and as required for the satisfactory completion of the works, complete with accessories, including all necessary weld plates, cleats, bolts, etc., for building into concrete and concrete blockwork. All aspects of this work shall be carried out to comply with the requirements of the New Zealand Building Code and relevant Standards, and in accordance with the project design documentation, and with any relevant product manufacturers' recommendations.

The following is a list and a general description of the extent of Structural Steelwork, which are more specifically defined in the contract documents, required for the completion of the contract works:

2.5.2 Requirements

Safety

Comply with the Health and Safety at Work Act 2015 (HSWA), and with all relevant Health and Safety at Work Regulations 2016, and with all relevant WorkSafe New Zealand (WorkSafe) Approved Codes of Practice and WorkSafe Information and Guidance, in particular the 'OSH Guidelines For the Provision of Facilities and General Safety in the Construction Industry'.

Carry out all construction operations in accordance with the Contractor's project-specific Health and Safety Plan.

Quality Assurance - Option 1

Construction of all structural steelwork shall comply in all respects with the design drawings and the specifications.

Prepare and submit details of the fabrication and erection quality assurance procedures for approval. These procedures should encompass all aspects of fabrication.

The quality assurance procedures shall encompass all aspects of the structural steel construction including, but not limited to:
- compliance of materials; and
- welding procedures; and
- steel preparation prior to painting; and
- quality of painting/coatings; and
- erection of structural steelwork.

Maintain and adhere to the quality control procedures for the fabrication and erection of structural steelwork at all times, and ensure that work is performed to the required standard in accordance with the contract documents.

Notify the name of the Structural Steelworker's representative responsible for the quality control of all structural steelwork.

Architecturally Exposed Structural Steel (AESS)
Where structural steel members are specifically designated as 'Architecturally Exposed Structural Steel' or 'AESS' on the drawings, the requirements of NZS 3404.1: Section 6 shall apply. AESS members or components shall be fabricated and erected with the care and dimensional tolerances that are stipulated in NZS 3404.1: Sections 6.2 to 6.5.

Shop Drawings
Prior to commencing steelwork fabrication, prepare and submit for review shop drawings of structural steelwork. The drawings shall provide complete details of each assembly in the steelwork together with all information relative to their fabrication, surface treatment and erection. Each component and connection shall show the relevant work points.

Allow 10 working days for the review of shop drawings. The review of shop drawings shall not relieve the Contractor of the responsibility for the accuracy of the shop drawings and for the correctness of the fabrication, setting out and erection of the steelwork. The cost of rectifying any errors shall be at the Contractor's expense.

Shop drawings shall be coordinated between disciplines and incorporate specific requirements shown on the Architectural, Structural and Building Services drawings.

Shop drawings shall include, but not be limited to:
- Design calculations;
- Fully dimensioned elevations of all structural steelwork elements (at a suitable scale);
- Complete details of construction, connections and support systems (at a suitable scale);
- Dimensions of all elements;
- Jointing details and method of fixing between individual elements and adjacent work;
- Provision for thermal movement;
- Provision for seismic movement and movement under wind loads;

- Installation sequence;
- Coordination requirements with other work and trades, including penetrations, fixings, etc.
- A full schedule of materials, finishes, and fasteners.

Materials & Workmanship

Adhere to all relevant requirements of NZS 3404, AS/NZS 1554.1 and AS/NZS 1554.2 for the supply of all materials and in workmanship both on and off site. The use of materials complying with any other Standard equivalent to those stated herein shall only be permitted with the prior approval of the Contract Administrator.

Welding Qualifications

All welders shall be suitably qualified to AS/NZS 2980, and familiar with the specified materials and welding techniques required in accordance with AS/NZS 1554. No welder shall carry out work for which he/she is not certified/qualified.

On request, provide evidence of welding qualifications, including a list of proposed welders and their welding certificates, prior to any welding being carried out.

Inspections

Provide opportunity to inspect the work on site, and give at least 24 hour's notice for the work to be inspected. Should further inspections and tests by a specialist inspector be required due to concerns about the quality of workmanship, then these shall be at the Contractor's expense.

Defective Materials & Work

Should defective materials and/or work be found at any time before the final acceptance of the work, it shall be rejected. All rejected structural steelwork shall be repaired and/or replaced to the satisfaction of the Contract Administrator - without delay, and at the expense of the Contractor.

If a field-weld is used to substitute (in place of) a shop-weld, the field-weld shall be deemed defective, unless it is subject to specific non-destructive examination (NDE) in accordance with AS/NZS 1554 and to the satisfaction of the Contract Administrator.

2.5.3 Materials

Steel

All mild steel shall comply with the requirements of AS/NZS 3679.1.

Except where specified otherwise on the drawings, hot-rolled steel sections shall be Grade 300 complying with OneSteel 300PLUS specification and AS/NZS 3679.1. OneSteel 300PLUS specification shall take precedence where conflict exists with AS/NZS 3679.1.

Except where specified otherwise on the drawings, cold-formed structural steel hollow sections shall be Grade C350, and shall comply with AS/NZS 1163.

Except where specified otherwise on the drawings, structural steel welded I sections (welded beams and welded columns) shall be Grade 300, and shall comply with AS/NZS 3679.2.

Structural steel hot-rolled plate shall comply with AS/NZS 3678.

All structural steel to be welded shall be suitable for welding in accordance with the specified welding procedures of AS/NZS 1554: Parts 1, 2, 5 and 7.

The surface condition of steel shall be no worse than Rust Grade C in accordance with International Standard ISO 8501-1 or Swedish Standard SIS 05 5900.

Any unidentified steel shall not be used unless approved by the Contract Administrator. When the use of unidentified steel is approved for use, it shall only be used as specified in NZS 3404: Section 2.2.3.

Submit all mill certificates to the Contract Administrator prior to fabrication for all steel to be used.

Bolts, Nuts & Washers

Mild steel (black) bolts, nuts and washers shall comply with the requirements of AS 1110, AS 1111 and AS 1112.

High-strength bolts, nuts and washers shall comply with AS/NZS 1252.

Bolts, nuts and washers which form a permanent part of a structure subject to weather exposure shall be hot-dipped galvanised. Hot-dipped galvanised bolts shall be limited to those received from the bolt manufacturer. Where these are not available, the bolts, nuts and washers shall be electro-galvanised, but only in accordance with AS 1897.

Where necessary to ensure even bearing, tapered washers complying with BS 4320 shall be used.

Bolts and bolting procedures to be used shall be as noted on the drawings in abbreviated form, in accordance with the abbreviation list shown on the drawings.

All bolts shall be installed with one washer and one nut unless specified or shown otherwise on the drawings. A washer shall be placed under the rotating component.

Hardened or plate washers shall be used under both the bolt head and nut for any slotted and oversize holes.

Methods of tensioning bolts shall conform with the requirements of NZS 3404.

2.5.4 Painting

Painting

Comply with the requirements of AS/NZS 2312.1 for corrosion protection of structural steel using paint coatings. All structural steel which is not to be treated otherwise shall be primed before delivery to the site.

Paint coating system for structural steel shall be as specified below and in accordance with AS/NZS 2312.1: Table 6.3.

The coating manufacturer may suggest alternative paint coating systems for the protection of structural steelwork in accordance with AS/NZS 2312.1 to meet specification requirements. The use of any such alternative paint coating system shall be subject to approval by the Contract Administrator.

All coating products shall be the of the same manufacturer, and supplied in unbroken packages clearly labelled with the product name and manufacturer. Do not used damaged or defective products, or products that are beyond their designated shelf life.

Maintain and comply with industry-recognised quality assurance procedures to ensure that all sections of the work are carried out in accordance with the manufacturer's requirements.

The preparation for and application of the specified coating systems and coatings shall be carried out by experienced and skilled specialist applicators, in strict accordance with the manufacturer's technical literature and to fully comply with the manufacturer's warranty requirements. All substrate preparation and coating application and finishing techniques shall be exactly as recommended by the manufacturer.

Ensure compatibility of the substrate material and the environmental exposure conditions with the protective coating system prior to commencing.

Handle coating products in accordance with the manufacturer's requirements as set out in the manufacturer's Product Data Sheets and in a manner that prevents deterioration of the product.

Applicators shall be familiar with and comply with the manufacturer's Material Safety Data Sheet precautions for use, and use appropriate safety gear when handling products.

The coating manufacturer's requirements for substrate material, substrate preparation, and coating system application methods and details, and coating thicknesses, as specified in the manufacturer's coating system specification sheet and product data sheets, shall be strictly adhered to during all stages of painting structural steelwork.

Carry out all substrate preparation and protective coating application under cover, in a well lit and ventilated, stable and weatherproof environment within the permitted temperature range. Comply with the manufacturer's parameters for application conditions for air temperature, substrate surface temperature, and relative humidity.

For on-site applications, mask off and adequately protect surrounding finished work and fixtures and fittings from contamination prior to substrate preparation and/or coating application.

Apply each coat in the manufacturer's specified sequence, uniformly to the recommended dry film thickness (DFT), and allow each coat the full drying time between coats. All over-coating and recoating must be undertaken within the manufacturer's specified recoat timeframe.

Adequately protect all work in progress from damage, contamination and exposure to the environment until complete and fully cured.

Leave finished coated surfaces clean, free from defects and blemishes of any kind, and to the required standard in accordance with manufacturer's requirements.

Dispose of coating products in accordance with local government requirements. Do not permit products to enter or contaminate the stormwater system.

Provide the completed Product Warranty and Applicator Warranty upon completion of the work.

Inspections

Allow to inspect the paint coating work at each stage. Provide a Schedule of Inspections, including notification of when each section and stage of the work is ready for inspection, prior to the work commencing. Permit the coating manufacturer's technical representative to inspect the work in progress and to take samples of their products from site.

3 BRICKWORK

3.1 Preliminary

Refer to General Conditions of Contract and the Special Conditions in this Specification as appropriate. Read this section in conjunction with all other trade sections.

3.2 Compliance

Comply with the New Zealand Building Code 1992 including all revisions and amendments, Verification Methods where appropriate, and construction principles that are embodied in the Acceptable Solutions.

Comply with all relevant provisions and recommendations of:

2699.1:2000(AS/NZS)	Built-in components for masonry construction - Wall ties
3103:1991(NZS)	Specification for sands for mortars and plasters
3604:2011(NZS)	Timber-framed buildings
4210:2001(NZS)	Masonry construction: Materials and workmanship
4236:2002(SNZHB)	Masonry veneer wall cladding
NZBC B2	Durability
NZBC E2/AS1	External Moisture

3.3 Brickwork

3.3.1 Scope

Supply and lay the selected bricks to form the brick elements as shown on the drawings. All aspects of this work shall be in accordance with the related compliance documents and as shown on the drawings.

3.3.2 Workmanship

Where required by the NZ Building Act 2004 it is the building contractor's responsibility to ensure that all restricted building work is carried out by a Licensed Building Practitioner.

All work shall only be carried out by Licensed Building Practitioners - Bricklaying and Blocklaying, and conform to the requirements of NZS 4210.

Submit evidence on request of experience, relevant qualifications, LBP Licence - Bricklaying & Blocklaying, New Zealand Masonry Trades Association (NZMTA) Member Registration.

Co-operate with the concretor and carpenter in the setting out of the works.
Co-operate with other trades to ensure that all preliminary and preparatory works, including all framing, membranes, wraps, rigid air barriers, and flashings, all relevant clearances, and any other related works, are completed to specification and as shown on the drawings.
Co-ordinate with trades the locations of pipes, outlets, cables, meter boards and other fittings installed by others.

All brick veneer walls shall be true to line, level and plumb, and within the tolerances tabled in NZS 4210 and SNZ HB4236. All brickwork laid to stretcher bond pattern, with joints width 10mm +/- 3mm.

3.3.3 Installation

Install all brickwork related damp proof courses in accordance with the requirements of NZBC E2/AS1 and to the details shown on the drawings.

Mortar shall have a minimum compressive strength of 12.5 MPa, and be manufactured from cement, sand, lime, and admixtures, and be accurately measured and mixed in accordance with NZS 4210. Mineral oxide pigment dosages shall be to NZS 4210.

Form all necessary openings, reveals, sills, weepholes, separation and control joints, and cavities to the locations and details shown on the drawings, and in accordance with the requirements of NZBC E2/AS1 and NZS 4210. Install necessary vermin stops. Weatherproof all separation joints to the details shown on the drawings.

Wall tie type, durability, spacing, fixing and installation shall be as defined in NZBC E2/AS1 Tables 18A, 18B, 18C, and NZS 4210.

Install all necessary flashings to openings, and other locations as required, to the details shown on the drawings and in accordance with NZBC E2/AS1 requirements.

During the progress of work every care must be taken to prevent moisture penetration of the bricks. No bricklaying shall proceed during wet weather. Upon completion of each days work, exposed tops of brick veneers shall be protected from inclement weather.
Comply with NZS 4210 Cold Weather Construction and Hot Weather Construction requirements.

On completion or the works leave brickwork clean and free of marks and staining. All brickwork cleaning shall be done to the brick manufacturer's recommendations.
Thoroughly clean all other surfaces affected by the brickworks.

3.3.4 Mortar Pointing

Mortar joints shall be concave, tooled to a depth not exceeding 6mm and burnished after the initial stiffening has occurred.

4 CARPENTRY

4.1 Preliminary

Refer to General Conditions of Contract and the Special Conditions in this Specification as appropriate. Read this section in conjunction with all other trade sections.

4.2 Compliance

Comply with the New Zealand Building Code 1992 including all revisions and amendments, Verification Methods where appropriate, and construction principles that are embodied in the Acceptable Solutions.

Comply with all relevant provisions and recommendations of:

1080.1:2012(AS/NZS)	Timber - Methods of test - Method 1: Moisture content
1170.2:2011(AS/NZS)	Structural design actions - Wind actions
1491:1996(AS/NZS)	Finger jointed structural timber
1604.3:2012(AS/NZS)	Specification for preservative treatment - Part 3: Plywood
1859.1:2004(AS/NZS)	Reconstituted wood-based panels - Specifications - Particleboard
1859.2:2004(AS/NZS)	Reconstituted wood-based panels - Specifications - Dry-processed fibreboard
2269.0:2012(AS/NZS)	Plywood - Structural - Part 0: Specifications
2270:2006(AS/NZS)	Plywood and blockboard for interior use
2271:2004(AS/NZS)	Plywood and blockboard for exterior use
2295:2006(NZS)	Pliable, permeable building underlays
2588:1998(AS/NZS)	Gypsum plasterboard
2589:2017(AS/NZS)	Gypsum linings - Application and finishing
2904:1995(AS/NZS)	Damp-proof courses and flashings
2908.2:2000(AS/NZS)	Cellulose-cement products - Flat sheets
3601:1973(NZS)	Metric dimensions for timber
3602:2003(NZS)	Timber and wood-based products for use in building
3603:1993(NZS)	Timber Structures Standard
3604:2011(NZS)	Timber-framed buildings
3617:1979(NZS)	Specification for profiles of weatherboards, fascia boards, and flooring
3618:1984(NZS)	Mechanical stress grading of timber
3622:2004(NZS)	Verification of timber properties
3631:1988(NZS)	New Zealand timber grading rules
3640:2003(NZS)	Chemical preservation of round and sawn timber
BRANZ BU411	Recommended timber cladding profiles
NASH Standard	Residential and Low-rise Steel Framing - Part 1: Design Criteria
NZBC B1	Structure

NZBC B2	Durability
NZBC E2/AS1	External Moisture

4.3 General

This section includes the receiving, stacking and storage of all Carpenter's materials and the fabrication, erection and fixing of all framing, sheathings and finishing timbers, including all work incidental to neatly finishing in other trades and all temporary work and temporary bracing.

The Carpenter shall attend upon all trades, and shall supply and fix all obviously necessary but not specifically mentioned fixings and materials.

4.4 GIB EzyBrace® Systems

4.4.1 Scope

Supply and install the specified GIB EzyBrace® Systems to the locations identified on the drawings, incorporating GIB® plasterboards and all system components and accessories required for proper installation and performance. All aspects of this work shall be in complete accordance with the GIB EzyBrace® Systems (2016) publication, GIB EzyBrace® Bracing Software and the GIB® Site Guide (check www.gib.co.nz, or call 0800 100 442 for the latest editions), BRANZ Appraisal No.928 (2016), other relevant product manufacturers' recommendations, and as shown on the drawings.

No substitutions are permitted for GIB EzyBrace® Systems, GIB® Plasterboard Linings, or GIB® System components and accessories.

This specification section must be read in conjunction with the GIB® Plasterboard Linings specification and relevant GIB® Systems specifications, and other specification sections, as they are interrelated.

For the purpose of this specification, the GIB EzyBrace® Systems (2016) publication is referred to as the GIB EzyBrace® Systems Manual.

The majority of the bracing elements will remain. Selected new bracing elements have been added using the lastest bracing software. the overall bracing design is 2017 current. New units to be fixed to new and existing walls.

4.4.2 GIB EzyBrace® Systems - Timber Frame

BLG-H

GIB EzyBrace® System - BLG-H. A timber frame, internal wall bracing system incorporating one layer of GIB Braceline® on one side, and one layer of any 10mm or 13mm GIB® Plasterboard on the other, and panel hold-down fixings. Refer to the GIB EzyBrace® Systems literature.

Installed Location: See new braced walls sheet 6 in drawing set..

BL1-H

GIB EzyBrace® System - BL1-H. A timber frame, external or internal wall bracing system incorporating one layer of 10mm or 13mm GIB Braceline® on one side. Refer to the GIB EzyBrace® Systems literature.

Installed Location:

GS1-N

GIB EzyBrace® System - GS1-N. A timber frame, external or internal wall bracing system incorporating one layer of any 10mm or 13mm GIB® Standard Plasterboard on one side. Refer to the GIB EzyBrace® Systems literature.

Installed Location:

4.4.3 Co-operation

Co-operate with other trades to ensure that all preliminary and preparatory works are completed to specification and as shown on the drawings.
Co-operate with the Decorator to ensure that the specified Finish Levels for plasterboard jointing and finishing is achieved before decorating commences.

Coordinate with other trades to install GIB EzyBrace® Systems to the required set-out and standard, and to ensure:
- appropriate tolerances and clearances allow for adjacent internal linings, fixtures, fittings, services, etc; and
- GIB® plasterboard linings correctly allow for proper door and window installation; and
- penetrations for building services are correctly handled to maintain sheet integrity and system performance.

4.4.4 Workmanship

Where required by the NZ Building Act 2004, it is the building contractor's responsibility to ensure that all restricted building work is carried out by a Licensed Building Practitioner.

Installation of GIB EzyBrace® Systems shall be carried out by experience and competent tradespersons, who are familiar with the specified materials and installation techniques, in accordance with the manufacturer's installation requirements, and to fully comply with all warranty requirements. Submit evidence of experience on request, e.g. National Certificate of Interior Systems, or Certified Business Member of AWCINZ.

Carry out all necessary installation inspections in accordance with the GIB EzyBrace® Systems Manual and the GIB® Site Guide, and to fully comply with the manufacturer's warranty requirements as the works progress.

All cutting, jointing, fixing and sealing techniques shall be exactly as recommended by the manufacturer. All work shall be such as to leave a neat, efficient and robust installation, to the required standard, free from damage and defects.

Make all necessary provisions to protect adjacent work and surfaces from damage during installation.

On Completion:
- Check that GIB EzyBrace® Systems have been correctly installed and finished in accordance with the requirements of the GIB EzyBrace® Systems Manual and GIB® Site Guide, to the correct set-out, dimensions and details shown on the drawings.
- Check for any damage and defective work - repair or replace as necessary to the required standard.
- Ensure that inspection and assessment of the plasterboard Finish Level has been carried out, and that written agreement stating the completed jointing and finishing is acceptable for subsequent surface sealing and decoration has been provided.
- Ensure that the GIB® Installation Sign-Off Certificate has been completed and signed by the Interior Plasterer/Stopper.
- Leave all of this work complete and to the required standard in accordance with the manufacturer's warranty requirements, as shown on the drawings and the conditions of the Building Consent.
- Clean up thoroughly and leave the finished work and surrounding surfaces clean and free of contamination from compound splashes and sanding dust. Remove all associated rubbish and excess material from the site.
- Issue to the Owner a copy of the GIB® Plasterboard Lining Systems Care and Maintenance bulletin, and a copy of the GIB® Product and System Warranty.

4.4.5 Delivery & Handling

Store all GIB EzyBrace® Systems plasterboard linings and system components indoors, off the floor, on a flat, level surface in accordance with the manufacturer's requirements. Keep stored plasterboard linings and system accessories dry, out of direct sunlight, and protected from damage, moisture and contamination at all times.

Do not use damaged or defective materials and products, or products that are beyond the designated shelf life. Cracked or damaged GIB Aqualine® sheets must never be used.

Should a problem be encountered with any GIB® product during installation or delivery, immediately contact the GIB® Helpline on 0800 100 442. Do not continue to use the product that is not performing to specification or expectation. Keep samples of the product in question and where possible, document batch numbers and/or manufacturing dates.

Handle all materials in accordance with the manufacturer's requirements and relevant Product Data Sheets, and in a manner that prevents damage.

Installers shall be familiar with and comply with the manufacturer's Material Safety Data Sheet precautions for use, and use appropriate safety gear when handling materials. Carry plasterboard sheets on edge, and avoid damage to sheet edges, ends, and surfaces.

Installers shall conform with all relevant WorkSafe NZ Guidelines and Codes of Practice - including the OSH Guidelines For the Provision of Facilities and General Safety in the Construction Industry.

4.4.6 Preparation

General

All framing shall be complete and ready for GIB® Ezybrace Systems and associated GIB® plasterboard linings installation.

Timber framing shall comply with NZS 3604, or with NZS 3603 and AS/NZS 1170 for specific design, and have a maximum moisture content 18% at the time of plasterboard lining installation.

Light structural steel framing shall comply with the requirements of AS/NZS 4600 or the NASH Standard for Residential and Low-rise Steel Framing, Part 1: Design Criteria. All light structural steel framing members shall satisfy the requirements of AS/NZS 1170. Comply with the steel framing fabricator's specifications and requirements for plasterboard installation.

Steel stud partitioning shall comply with AS 1397 and as specified and shown on the drawings. Comply with the manufacturer's specifications and requirements for plasterboard installation.

Concrete substrates shall comply with the CCANZ CP 01:2011 or with NZS 3109. New concrete must have aged for a minimum of 28 days. Ensure that concrete surfaces are within the tolerances specified.

Concrete masonry structures shall comply with NZS 4229, or with NZS 4230 and AS/NZS 1170 for specific design.

Carry out all necessary moisture readings. Do not commence installation until the moisture readings are below the required level.

Carry out all necessary substrate inspections and preparatory work in accordance with the manufacturer's recommendations and the GIB® Site Guide prior to installation. Complete and sign the GIB® Site Guide Pre-Installation Checklist.

Check that the building envelope has been finished at all penetrations including doors, windows, services, etc., and the building is weathertight.

Check junctions to all other building elements and ensure that all necessary works have been completed, including cavity insulation.

Check that all fixtures, fittings and built-in items are correctly installed, and that all framing and substrate edges are completed as detailed.

Confirm the location and details of movement control joints, as indicated on the drawings, prior to installation.

Ensure all pre-wiring and service piping is installed and complete.

Check that any required cavity insulation has been installed correctly and its bulk thickness does not exceed the framing thickness.

Remove all debris and rubbish from framing voids prior to installing linings.

The commencement of work on each section/area shall be deemed to indicate full acceptance by the installer that all preparatory works by other trades is complete.

Framing Check
Framing - check all aspects of preparatory works, including but not limited to:
- Check that the framing is straight and true to line, and is plumb/level and correctly aligned.
- Check that the framing is within the required deviation tolerances defined in AS/NZS 2589 according the specified Finish Level.
- Check that vertical and horizontal framing members are at the spacings shown on the drawings, and that any required battens or furring channels are installed to the required layout.
- Check that the framing has no projections due to structural and bracing bracketry, etc. Ensure that framing brackets, plates, braces, hold-downs, etc., are correctly installed.

4.5 Weatherboard Cladding Systems

4.5.1 Scope

Vertical Shiplap Weatherboard
Supply and install Hermpac VertiLine Shiplap Cedar Weatherboard Cavity System, as specified herein, to the walls identified on the drawings, complete with all accessories and trim. All aspects of this work shall be in complete accordance with the Hermpac product specifications and technical literature (check www.hermpac.co.nz, email: technical@hermpac.co.nz, or call 09 421 9840 for the latest editions), BRANZ Appraisal No.650 (2014), NZBC E2/AS1, other relevant product manufacturers' recommendations, and as shown on the drawings.

VertiLine Shiplap Cedar Weatherboard Cavity System is CodeMark assured: CodeMark Certificate of Conformity No. GM-CM30036-RevE, issued by Global-Mark Pty Ltd.

No substitutions or deletions are permitted for Hermpac VertiLine Shiplap Cedar Weatherboard Cavity System.

4.5.2 Timber Species & Grade

Western Red Cedar, Premium Clears No.1 - Shiplap Weatherboard
Hermpac Shiplap Weatherboard shall be manufactured from Canadian Coastal Western Red Cedar (*Thuja plicata*), Premium Clears No.1 (PC1) grade.

4.5.3 Weatherboard Profile

HP51 Vertical Shiplap - 110mm Cover
HP51 Hermpac Vertical Shiplap Weatherboard: 110mm cover, 135mm wide x 18.5mm thick with 27mm wide rebate.

Installed Location: To new entry wall details

4.5.4 Weatherboard Finish & Coating

Bandsawn Face - Wood-X Cedar Oil - Shiplap Weatherboard

The selected Hermpac Shiplap Weatherboard shall be manufactured with a Bandsawn Face (BSF), and pre-finished with Wood-X Cedar Oil to the specified colour, applied by the Machinecoat Floodcoat coating system.

Colour: To be confirmed.

4.5.5 Accessories

Hermpac Aluminium Corner Back Flashings

Hermpac Aluminium Corner Back Flashings - internal and external corner back flashings, sized to suit specific corner details in accordance with Hermpac requirements and as shown on the drawings.

Weatherboard Fixings

Weatherboard Fixings - refer to Fixing clause below.

4.5.6 Co-operation

Co-operate with other trades to ensure that all preliminary and preparatory works, including membranes, flexible underlays, rigid air barriers, and trims and any other related works are completed in accordance with the Hermpac Cavity System Installation Specification and Construction Drawings.

Refer www.hermpac.co.nz, email: technical@hermpac.co.nz, or call 09 421 9840 for any technical assistance required, and ensure that current Hermpac technical literature is referenced and followed when installing Hermpac weatherboards.

Coordinate with trades the locations of pipes, outlets, cables, meter boards and other fittings installed by others, and to install Hermpac Weatherboard Cladding System as required.

4.5.7 Workmanship

Where required by the NZ Building Act 2004 it is the building contractor's responsibility to ensure that all restricted building work is carried out by a Licensed Building Practitioner.

Installation work shall be carried out by suitably qualified and experienced tradespersons, familiar with the specified products and the required construction and installation techniques, in accordance with the requirements of the Hermpac technical literature and associated BRANZ Appraisal, NZBC E2/AS1, and as noted and detailed on the approved construction drawings.

Upon completion of the installation, the installing LBP shall complete and sign a Restricted Building Work (RBW) memorandum and the associated Hermpac Weatherboard Cladding System Quality Assurance Check List. Issue a copy of the RBW document to the Building Consent Authority and to the Main Contractor.

All work shall be such as to leave a neat, efficient, robust and weathertight installation, to the required standard, free from damage and defects, including surface marking.

Make all necessary provisions to protect adjacent finished work and surfaces from damage during installation.

Refer www.hermpac.co.nz, email: technical@hermpac.co.nz, or call 09 421 9840 for any technical assistance required, and ensure that current Hermpac technical literature is referenced and followed when installing Hermpac weatherboards.

4.5.8 Delivery & Handling

Store weatherboards and accessories undercover, flat and true, clear of the ground by at least 150mm and supported on dry and clean timber bearers at maximum 900mm centres in accordance with Hermpac recommendations. Keep stored weatherboards and accessories dry and protected from damage and contamination, and free from bending or excessive compression.

Do not use damaged or defective weatherboards or accessories.

Dock any oversized knots, unacceptable or unrequired grade characteristic, or damaged areas of weatherboard. Do not install weatherboards during periods of wet weather. Double seal all cut ends and fresh cut timber with selected exterior coating.

Handle weatherboards in accordance with the manufacturer's recommendations and in a manner that prevents damage and surface marking.

Installers shall be familiar with, and comply with, the manufacturer's safe handling requirements and precautions for use, and shall use appropriate safety gear when handling materials.

Installers shall conform with all relevant WorkSafe NZ Guidelines and Codes of Practice - including the Best practice guidelines for working at height in NZ, and the OSH Guidelines For the Provision of Facilities and General Safety in the Construction Industry.

4.5.9 Preparation

Hermpac Shiplap Weatherboard Cavity-Fixed over a Flexible Wall Underlay on Timber framing - check all aspects of preparatory works, including, but not limited to:

- Check that the timber wall framing complies with NZS 3604, has studs at maximum 600mm centres and nogs/dwangs at maximum 480mm centres for vertical cladding, is plumb and in true alignment, includes all blocking required for cavity battens and fixing at openings, joints, corners, soffits, etc., and has a maximum moisture content of 18% at the time of cladding installation.
- Check that the flexible wall underlay, as specified, has been installed in accordance with NZBC requirements and the manufacturer's recommendations, and with all finishing tapes, flashings etc. at windows, doors, corners and penetrations all correctly incorporated to provide a continuous seal.
- Where the studs are at greater than 450mm centres, check that appropriate additional restraint is correctly installed to the wrap to keep bulk insulation from pushing the underlay into the cavity space.
- Check that all preparatory materials are lapped such that any water will run down to the exterior.

4.5.10 Cavity Battens

Vertibat 20mm Cavity Battens - Vertical Weatherboards, 20mm Cavity

Vertibat 20mm thick Timber Cavity Battens - to form a nominal 20mm deep drained cavity for Hermapc vertical weatherboards. Vertibat V1 - 40 x 20mm thick, and Vertibat V2 - 70mm x 20mm thick, bevelled and castellated timber cavity battens; incorporating 20mm wide x 5mm deep, alternating rebates at 100mm centres either side of the batten. Manufactured from minimum H3.1 treated Radiata pine.

Fix Vertibat 20mm thick cavity battens along dwang lines, etc., with 40 x 2.5mm hot-dipped galvanised flat head nails or 50 x 2.8mm hot-dipped galvanised gun nails.

Installed horizontally, at minimum 400mm to maximum 480mm vertical centres, to the layout and details shown on the drawings and in accordance with the Hermpac VertiLine Installation Specification.

4.5.11 Cavity Closure Strip

uPVC Cavity Closure Strip. Punched with 3-5mm holes or slots complying with NZBC E2/AS1 Paragraph 9.1.8.3. Fitted to the base of the drained cavity, above window and door heads, and inter-storey junctions. Installed in accordance with E2/AS1 to the locations and details shown on the drawings.

4.5.12 Installation

General Requirements

Install the specified Hermpac Weatherboard Cladding System, complete with accessories, in accordance with the Hermpac installation requirements and technical literature and as shown on the approved construction drawings.

Confirm the layout and location of all control joints; the layout of cavity battens; and any specific cladding detailing requirements prior to installation.

Ensure that all associated preliminary and preparatory works are completed to the required standard and specification, and as shown on the drawings.

Ensure that the current and up-to-date Hermpac installation and technical literature is readily available on site for reference during installation.

Weatherboard soaker and/or flashing material compatibility shall be in accordance with NZBC E2/AS1 2.2, and as shown on the drawings.

Ensure all cut ends and fresh timber is double coated and sealed in accordance with Hermpac requirements before fixing.

Refer to Fixing for fixing type and placement etc.

All internal and external weatherboard corner junctions, inter-storey junctions, and weatherboard trim and accessories, shall be constructed and installed to the details shown on the drawings.

Always keep Hermpac weatherboard cladding lines consistent and true along walls and around corners.

All flashings around windows, doors and other openings, at corner junctions, inter-storey junctions, soffit junctions, and pipe penetrations, shall be carefully constructed, fixed and finished to the details shown on the drawings.

Cavity Fix over Flexible Underlay - Shiplap Weatherboard
Hermpac Shiplap Weatherboards installed over a cavity drain (20mm/40mm/45mm) over a flexible wall underlay:

Over the flexible wall underlay, install and fix the specified cavity battens to the timber framing to the layout and details shown on the drawings.

Back flash all internal and external corners with Hermpac aluminium corner flashings.

Carefully set-out cladding vertically to straight plumb lines with side laps directed away from prevailing weather.

As specified and shown on the drawings, fix shiplap weatherboards to the timber framing through 20mm thick Vertibat or Cavibat cavity battens, or fix to Vertibat 40mm or 45mm thick cavity battens, and maintain the base overhang minimum 50mm, or as detailed, below the bottom plate or floor structure.

Install full length weatherboards where possible. Where joints are unavoidable, scarf the weatherboards at 30º over a cavity batten line, and fix weatherboard ends, with the top board fixed through the top overlapping board above the joint - not through the joint.

Overlap, joint and fix cavity-installed Hermpac Shiplap Weatherboards in accordance with Hermpac installation requirements and as detailed on the drawings. NB: Ensure weatherboard end-grains are double coated.

4.5.13 Fixing

Rose Head Nail, Silicon Bronze - Shiplap Weatherboard
Fix Hermpac Shiplap Weatherboards with Silicon Bronze Annular Grooved Rose Head Nails in accordance with Hermpac fixing requirements and as shown on the drawings.

The nail shank must be minimum 3.15mm diameter for cavity-fixed weatherboards, or 2.8mm diameter for direct-fixed weatherboards.

When fixing with rose head nails (used most often for an oil/stain finish), the nail length must allow minimum 30mm penetration of the wall frame. When installed over Vertibat 40mm or 45mm thick cavity battens, nails shall achieve a minimum 30mm penetration into the Vertibat cavity battens.

All nail fixings shall be pre-drilled a maximum of 1mm diameter smaller than the nail gauge.

Ensure the weatherboards are set-out with an overlap of 25mm, with a 2mm expansion gap between boards at the overlap.

Single fix weatherboards at every fixing point, with nails driven in a slight upward slope, located 30-35mm from the edge of the weatherboard, and no closer than 32mm from the end of the board.

Nails shall be set flush onto the board surface - not into or below the surface.

The hidden side lap must be restrained using the Hermpac Clinch Nail at every fixing point, with the nail shank flush against the hidden edge - the nail must not be fixed through the lap, refer to Hermpac details for correct placement.

4.5.14 Completion

Check that the specified Hermpac Weatherboard System has been correctly installed and fixed to the layout and details shown on the drawings; that all joints, associated trim and accessories finished correctly; and that all openings and penetrations have been properly flashed and sealed.

Check for damaged materials and defective work - carry out repairs as necessary to the required standard.

Ensure that the work of other trades does not negatively impact on or reduce the minimum clearances required by the NZ Building Code, between the cladding and ground, roof and/or deck junctures.

Leave all of this work complete and weathertight and to the required standard in accordance with Hermpac requirements and NZBC E2/AS1.

Leave the completed works and surrounding surfaces clean and free of debris and rubbish. Remove all rubbish and excess material from the site.

Complete and sign the Restricted Building Work (RBW) memorandum, and the Hermpac Weatherboard Cladding System Quality Assurance Check List. Issue a copy of the RBW document to the Building Consent Authority and to the Main Contractor.

Issue to the Owner a copy of the Hermpac Weatherboard Cladding System maintenance requirements.

4.6 Timber Framing

4.6.1 Scope

Supply and install timber framing to the floors, walls, roofs, and other timber framed elements, as identified and detailed on the drawings. All aspects of this work shall be in accordance with NZS 3604, product manufacturers' recommendations, and as shown on the drawings and the specification.

4.6.2 Workmanship

Where required by the NZ Building Act 2004 it is the building contractor's responsibility to ensure that all restricted building work is carried out by a Licensed Building Practitioner.

All work shall be carried out to current best trade practise by experienced and competent tradesmen, familiar with the materials and installation techniques, in accordance with NZS 3604 and as shown on the drawings.

Co-operate with other trades to ensure that all preliminary and preparatory works are completed to specification and as shown on the drawings prior to installing timber framing.
Co-ordinate with other trades to install timber framing as required.

4.6.3 Timber Framing

Timber Grade and Quality
Unless otherwise noted or specified on the drawings or specification, all framing timber shall be minimum structural grade SG 8 Radiata pine in accordance with NZS 3622.
Framing timber shall be seasoned or kiln dried, and be straight and true and free from wind, warp and distortion, and in lengths suitable for the members required, and shall have a moisture content of between 12% and 18% before installation.
Do not used damaged, faulty or defective materials.

Timber Treatment
All non-durable timber framing shall be appropriately treated against moisture and/or insect decay by treatment plants with recognised quality assurance systems that are administered by the Timber Preservation Council (NZTPC). Treatment of timber and wood-based building products shall be to the requirements of NZS 3602 as an absolute minimum, and all treated timber shall be identified and marked as required.
Carefully manage treated framing during installation to avoid accidental use of timber with a lower performance or durability treatment than that required or specified.

Storage & Handling
Check timber framing upon delivery and reject sub-standard or damaged material.
Store timber framing dry under cover, fillet stacked and well clear of the ground, and protect from damage, moisture, and contamination.
Ensure all appropriate personal protection equipment is worn at all times when handling and cutting treated framing.

Framing Installation
All timber framing members, including all dwanging, strutting, blocking, bracing etc, shall be sized, setout, fitted and fixed to the requirements of NZS 3604 and as shown on the drawings to accommodate structural loadings, cladding and lining setout and support, and the installation of other building components, fixtures and fittings.

All framing shall be erected without deviation, true to line, level, angle and plumb, and evenly aligned and square, and within the tolerances allowed in NZS 3604 Table 2.1. Framing members accurately cut, lapped, housed, joined, and seated so as to provide full contact over the bearing surfaces.

Temporarily prop, brace, tie, and secure framing members and elements as required until the framing is complete and self supporting. Leave in place for safety purposes as long as required.

Protect timber framing as required during installation against damage and moisture, and against significant variation of moisture content until ready for lining. Avoid ponding of water around floor plates.

Concrete Separation
Separate timber framing with an approved continuous damp proof course when in direct contact with concrete or masonry. Ensure that the DPC material is compatible with the timber treatment.
Free draining separations to external vertical faces shall be 12mm minimum and as noted on the drawings.

Built-up Framing Members
Except for jack studs, bottom plates and top plates, framing members may be substituted with built-up members in accordance with the limitations of NZS 3604 2.4.4.7 with the prior approval of the Architect/Designer only.

4.6.4 Steel Fixings

Fastenings and Connectors
Unless otherwise noted or specified, timber framing fastenings and connectors shall be as specified in the relevant fixing schedules of NZS 3604 or have an equivalent capacity as specified therein. Timber framing connectors and fixings shall comply with the product information as required in NZS 3604 2.4.6, and shall be used and installed in accordance with the manufacturer's recommendations. Pre-drill nail holes in split-prone framing as necessary.

Durability of Fixings & Fastenings
Unless otherwise noted or specified, the minimum durability of timber framing fixings and fastenings, excluding nails and screws, shall comply with the durability requirements of NZS 3604 Table 4.1.
Galvanised steel fixing components, excluding nails and screws, shall have galvanised coating masses in accordance with NZS 3604 Table 4.2.
Unless noted or specified otherwise, the materials for nails and screws shall be as given in NZS 3604 Table 4.3.
Steel fixings and fastenings in contact with timber treated with copper based timber preservatives (H3.2 or higher) shall be in accordance with NZS 3604 4.4.4.
Stainless steel nails shall be minimum Grade 304 unless otherwise specified or noted.

Bolts and Coachscrews
Unless specified or shown otherwise, all bolted and coach screwed connections shall be M12 or M16 in accordance with the relevant fixing requirements given in NZS 3604.
Bolted and coach screwed connections shall have either a 50mm x 3mm square, or a 55mm x 3mm

round, washer to each head and nut for M12 and M16 fixings. Washers shall be of the same material and durability as the bolt or coach screw.

4.6.5 Wall Framing

Plates

Top and bottom plates shall be to the dimensions and layout shown on the drawings. Unless specified or shown otherwise, top and bottom plates shall be fixed in accordance with NZS 3604 7.5.12 and Tables 8.18 and 8.19, true to line and level or angle.

Joints in top plates shall be made over a stud or over blocking between studs, and all top plate connections shall be in accordance with NZS 3604 8.7.3. Form all holes and edge notches in top and bottom plates in accordance with NZS 3604 8.7.5.

Studs

Studs shall be to the dimensions and spacings shown on the drawings, and installed true to line and plumb in both directions between top and bottom plates.

Unless noted otherwise, non-load bearing wall studs shall be to the spacings given in NZS 3604 Table 8.4, stud width as shown on the drawings.

Form all holes and edge notches in studs in accordance with NZS 3604 8.5.1.5. Do not notch, check, cut, or bore holes in the middle third of any trimming stud.

Should the need arise, studs shall be straightened in accordance with NZS 3604 8.5.3 with prior approval from the Architect/Designer only.

Unless noted otherwise, studs in loadbearing walls for 3 kPa floor loads shall be in accordance with NZS 3604 Table 14.10.

Lintels

Lintels shall be to the dimensions and locations shown on the drawings, and installed true to line and level, and shall be supported by a 45mm thick doubling stud or jack stud fixed to a trimming stud, and secured against uplift in accordance with NZS 3604 8.6.1.8 as required.

The thickness of a lintel may be made from two or more members, where each member is the length of the lintel, in accordance with NZS 3604 2.4.4.7.

Sill & Head Trimmers

Unless specified or shown otherwise, sill and head trimmers to openings shall be the same width as the wall stud and to the thickness given in NZS 3604 Table 8.15, and installed at the required opening height true to line and level, and supported by a 45mm thick doubling stud or jack stud fixed to a trimming stud.

Dwangs

Dwangs shall be the same width and thickness as the wall stud, and installed at the centres noted on the drawings, and accurately cut and fixed in place true to line and level and flush with stud edges. Dwangs fixed in accordance with NZS 3604 Table 8.19.

4.6.6 Roof Framing

Rafters

All rafters (including hip, valley and jack rafters) shall be to the dimensions, spacings, pitch, and layout shown on the drawings.

Rafters shall be aligned and paired at the required spacings to ridge boards, ridge beams, hip rafters and valley rafters, and as shown on the drawings, and installed parallel, true to line, pitch and plane, and fixed in accordance with NZS 3604 Table 10.1.

Any required jointing of rafters shall be made over supports shown on the drawings only.

Unless shown otherwise, rafter seating to top plates, beams, and lintels shall have a minimum bearing of 32mm without reducing the rafter depth to less than 65mm, or 80%, at the birds mouth.

Extend rafter ends to form eaves as detailed on the drawings and in accordance with NZS 3604 10.2.1.14.

Fly rafters and outriggers installed to form gable verges as detailed on the drawings and in accordance with NZS 10.2.1.15.3

Tile Battens

Tile battens shall be to the dimensions and spacings shown on the drawings and to suit the roofing tiles, and fixed to rafters and/or trusses in accordance with NZS 3604 Table 10.12. Tile battens shall be continuous over a minimum of two spans.

Tile battens laid directly over sheet sarking, or ceiling lining, shall be fixed and installed as shown on the drawings.

4.6.7 Ceiling Framing

Ceiling framing shall be to the dimensions, layout, spacings, and details shown on the drawings, and shall be installed true to line, level and plane, and securely fixed in accordance with NZS 3604 Table 13.3.

Unless specified or shown otherwise, timber ceiling battens shall be to the dimensions and spacings shown on the drawings and in accordance with NZS 3604: Table 13.1, and shall be installed true to line, level and plane, and fixed to the underside of floor joists, rafters, ceiling joists or truss chords in accordance with NZS 3604: Table 13.3.

Ceiling battens shall be of Merchantable grade or better timber complying with NZS 3631.

4.7 Workmanship & Materials

4.7.1 Workmanship

Supervision

Where required by the NZ Building Act 2004 it is the building contractor's responsibility to ensure that all restricted building work is carried out by a Licensed Building Practitioner. It is the main contractor's responsibility to ensure that the construction of all structural timber complies in all respects with the drawings and the specification.

All non-restricted building work shall be carried out by or under the direct supervision of competent tradespersons, suitably qualified for the work undertaken, and in accordance with the best and latest trade practice.

Timberwork

All timber shall be worked and cut to be true and square and free from wind and warp with all joints matching and mating to a proper contact fit over the full surface of the joint. All connections whether nailed screwed, glued, mortised or dovetailed shall be accurately made and properly executed to provide sound satisfactory connections for the class of work required.

Timber containing unacceptable defect or distortion shall not be cramped to provide mating at connections but shall be discarded and replaced by true defect-free timber before connections are made. Distribute any acceptable defects in timber so as not to impair the strength or the appearance of the finished work. Do not cut studs across the grain to straighten them.

The checking and cutting away of timbers shall be avoided where possible and shall be limited to such dimensions as will not prejudice the purpose for which the timber is used. Observe NZS 3604 restrictions on holing and checking of timber joists and beams. Concealed services pipes and wiring shall not project beyond the framing face and where possible shall be beyond the linings/claddings fixings reach.

Neatly punch exposed nailing to the diameter of the nail head below the surface. Completley remove bruises and tool marks, and replace all split timbers and hammer-marked finishing timbers.

Fit a 3-ply bituminous DPC or a single layer high impact polyethylene DPC at all timber to concrete junctions to provide complete separation. Ensure that the DPC material is compatible with the timber treatment.

Clean out framing voids before fixing sheathings or linings. Ensure framing voids are fully vermin proofed to the exterior. Build in as necessary all required flashings (supplied by others) to windows, doors, roof edges, etc.

Existing Timberwork

Check the condition of existing timber framing, flooring, weatherboards/cladding, timber facings and trim, etc., as access is available during the contract, and report any deterioration to the Architect/Designer. Any remedial works to be proceeded with will be directed as Variations to the Contract.

Wall Underlay

Install a flexible heavyweight building paper or breathable/absorbent wall underlay behind all exterior wall claddings, fixed horizontally, with minimum 150mm horizontal laps and minimum 150mm vertical joint laps made over a stud, and kept taut without sagging or bulging.
Fix wall underlay at maximum 300mm centres, with 6mm - 8mm stainless steel staples or 20mm large-head galvanised clouts or galvanised proprietary fixings, fixed through nylon vertical strapping at every stud in exposed locations. Provide additional fasteners fixed through the underlay around framed openings. Cut window and door openings just prior to joinery installation; cut underlay at 45º

angle away from each corner and return full framing depth and fasten to inside of frame.
Finish wall underlay at edges as detailed, and return full framing depth into window and door openings. Install all necessary flexible flashing tapes to openings, around pipes, ducts and other services penetrating the underlay, parapet and balustrade junctions, along head flashings and inter-storey flashings when installed, as required to seal the underlay, in accordance with wall underlay manufacturer's requirements and as shown on the drawings.
For drained cavity construction to framed walls without a rigid wall underlay and where the studs are at greater than 450mm centres, restrain the underlay with nylon strapping to prevent the underlay from bulging into the cavity space.
Any damaged underlay shall be made good by lapping in a new section.
Do not leave wall underlays exposed before covering with wall cladding for more than the manufacturer's recommended duration.

Window Installation
Prepare window and external door framing openings for joinery installation by neatly cutting the building wrap at 45º into corners, returning turning the wrap through the frame depth and fixing to the inside face.
Over-flash the underlay along the sill with a flexible flashing tape, installed full frame depth and length of the opening, returned minimum 100mm up the jambs, and with minimum 50mm return over the outside edge.
Over-flash the underlay at head/lintel corners with a flexible flashing tape, extending minimum 100mm each way from the corner, full frame depth, and with minimum 50mm return over the outside face.

Install external joinery frames with metal flashings as detailed and/or as required to completely weatherproof all frame-to-cladding junctions.
Unless shown otherwise, head flashings shall be carried minimum 75mm up behind claddings, extended at 15º out over the joinery head or facing board and returned down to cover the joinery or facing board minimum 10mm and finished with a 5mm, 45º 'kick out' drip-edge.
Neatly dress down the head flashings at the ends of the facings - for drained cavity construction, also form up-turned stop-ends in-line with the outside edge of cavity above.
Install metal (as specified) head flashings, fixed over the wall underlay, with the flashing upstand over-flashed minimum 50mm with a flexible flashing tape against the underlay, or with an additional piece of underlay extended over and lapped behind the underlay above, behind the inter-storey flashing or sill flashing above, or to the underside of the eaves.
Unless shown otherwise, sill flashings, where required, shall have a minimum 5º slope, minimum 8mm rear upstand with sealed sloping stop-ends, and be carried down minimum 35mm over the lower cladding and finished with a 5mm, 45º 'kick out' drip-edge.

Take delivery of window and door joinery. Check substrates for correct profile and alignment and that the joinery is fabricated to the correct wall construction set-out and depth. Set shims or pack as necessary to install joinery exactly true and square. Use appropriate separators between aluminium and other materials, and fix securely with due regard for any anticipated movements and for linings, trim, etc.

Install neat sealant beads as detailed or required.

After joinery installation, install closed cell backing rods as required and expanding foam seal the gap between the opening substrate and joinery liners/reveals (all round, from the inside).

On completion ensure that all sashes and doors neatly fit the openings with regular tolerances to all edges, and that all moving components and hardware are correctly adjusted and operating smoothly, without binding, to the required functionality.

Joinery Installation

Take delivery of all scheduled joinery items (doors, cabinets, shelves, etc.) and install in the positions shown, accurately aligned, true to level, plumb and square, and securely fastened as noted and in accordance with best trade practice and with due regard for adjacent linings, finishes and trim, and anticipated movements.

Cabinets scribed and/or recessed packers scribed to adjacent surfaces as detailed or directed. Protect all installed Joinery from damage including surface marking and contamination, dirt and dust, and moisture until completion. Do not use Joinery items for working supports or platforms or for storage of materials or tools and equipments.

On completion ensure that joinery item doors and drawers all neatly fit the openings with regular tolerances to all edges, and that all moving components and hardware are correctly adjusted and operating to the required functionality.

4.7.2 Timber

Timber Materials

All timber shall be graded in accordance with NZS 3631 - Structural Grade MSG8 or better for all framing timber - (to meet the requirements of Table 2.3 of NZS 3603 for mechanically graded timber), and Dressing Grade for all finishing timber. Timber that is deemed below standard, in the opinion of the Architect/Designer, shall be removed from the site.

All non-durable timber, including components in manufactured items, shall be appropriately treated against moisture and/or insect decay by treatment plants with recognised quality assurance systems that are administered by the Timber Preservation Council (NZTPC). Treatment of timber and wood-based building products shall be to the requirements of NZS 3602 as an absolute minimum, and all treated timber shall be identified and marked as required.
Ensure that similar timbers with different treatment levels are carefully managed during construction to avoid accidental use of an H1 treated item where H3 hazard class treatment is required by the NZS 3602.
Do not use LOSP (light organic solvent-based preservative) treated timber that has not adequately 'flashed-off'.
Ensure that all cut or drilled surfaces of H4 and H5 hazard class treated timbers are flood coat re-treated, with the product recommended by the original treatment plant, before installation.

All timber shall be seasoned or kiln dried, to the stable moisture content, be straight and true and free from wind, warp and distortion, and in lengths suitable for the members required and the location in the finished construction. All framing timber shall have a moisture content between 12%

and 18 % before being installed. If the use of inadequately seasoned timber results in damage or opening joints in the finished building the timber shall be replaced. Fixing of internal linings shall be delayed after closing in until the timber framing has dried back below 20% moisture content and to allow for the maximum settling of substrates.

All kiln dried, dressed and/or finishing timbers shall be stacked under cover on delivery to the site, and all timber shall be full to the nominal sizes shown or specified, subject only to normal cutting and dressing tolerances.
All finishing timber shall have machine marks, stains and roughness removed and shall be sanded smooth.

Ensure that enclosed surfaces and ends of paint-finished exterior finishing timbers are fully primed before fixing. If this trade (Carpentry) carries out the priming it shall be to the specification and standard required of the Painter.

Unless specified otherwise, exposed framing timbers shall be unfinished to the exterior, and be fine bandsawn milled, treated with a minimum of discolouration, handled carefully at all times to avoid surface damage, and delivered free of crayon or pencil or other markings. Hazard class treatment markings shall be on the ends, NOT on the faces.

Timber Cavity Battens
To wall areas as noted install H3.1 treated ex.50mm x 25mm timber battens to form a drained vertical cavity complying with E2/AS1 in all respects. Ensure that flexible wall underlay and flexible flashing tape are completely and correctly installed before fixing battens in place. Fix the battens with 60mm hot-dip galvanised flat head nails at maximum 400mm centres, ensuring that the batten set-out completely fulfils the cladding's fixing requirements. Install 1:12 sloping horizontal cavity spacers where required to suit claddings, keeping the ends 50mm clear of the vertical battens.

Other Materials
Materials shall be delivered to site with the packaging and labelling intact, shall be of the same type, finish or colour to maintain continuity, shall be stored, and conditioned if required, in accordance with manufacturer's recommendations, and shall be protected from damage, contamination, and moisture - as appropriate.
Handle all materials in accordance with best practice and the manufacturer's requirements, and in a manner that prevents damage or deterioration to the material. Do not use damaged or defective materials or products, or products that are beyond their designated shelf life.

4.7.3 Laminated Veneer Lumber

Laminated Veneer Lumber (LVL) shall comply with AS/NZS 4357.0. Each piece of structural LVL shall be branded at least once with the manufacturer's logo and a registered brand or marking that clearly identifies the structural properties that apply to the product and its limitations on end use; all in conjunction with associated published literature.

Structural properties identified in the associated published literature shall be:
- details of marking specific to the product
- veneer details

- physical properties including
  - modulus of elasticity
  - bending stress
  - tension stress parallel to grain
  - compression stress perpendicular to grain
  - compression stress parallel to grain
  - shear stress
- joint group
- density
- dimensional tolerances
- adhesives used
- limitations on end use

The storage and handling of LVL shall comply with Appendix A of AS/NZS 4357.0. In particular:
- LVL should be kept dry during storage and transit
- LVL should be stacked on bearers well clear of the ground and arranged so that their supporting surfaces are in the one plane
- Bearers should be spaced sufficiently close so that LVL spanning between them does not deflect excessively under its own weight.
- Bearers or spacers within a stack should be located near direct vertical alignment
- Care should be taken in lifting and handling LVL in order to avoid mechanical damage
- Wrapping should avoid and prevent entrapment of moisture
- LVL should not be used in high humidity conditions or exposed to the weather.

4.7.4 Fixings

Nails

Comply with the requirements of NZS 3604 Section 2.4.4 and the Nailing Schedules of NZS 3604 as applicable. Unless noted or specified on the drawings or elsewhere in this specification, all nails fixing exterior timbers shall be Grade 304 or 316 stainless steel. Nails that will be covered with plaster or any similar material shall be hot-dipped galvanised, unless noted or specified otherwise.

Finishing brads to all finishing timbers shall be set out neatly and punched to the diameter of the nail below the surface. Bore slightly undersize holes for nailing that could cause splitting of the timber. Power-driven staples are completely unacceptable in finishing timbers.

Screws

Screw fastenings shall be of suitable gauge, head type, thread design, and length to provide secure fastening into the substrate material, and be suitable for the assembly/construction of the fixed item/element and the substrate material.

Unless noted or specified otherwise, screws exposed to the exterior shall be Grade 304/316 stainless steel or hot-dipped galvanised, and hot-dipped galvanised or similar corrosion resistant for damp situations.

Self-drilling screws shall be in accordance with AS 3566 for fastener type and corrosion resistance class.

Unless noted or specified otherwise, screws fixing hardware or similar shall be of the same material

and finish as the hardware. Except where raised head screws are shown or specified, screws shall be countersunk flush or recessed where stopped/filled.

Bolts

Where bolts are used they shall be complete with nuts and washers unless specified otherwise. All bolts, nuts and washers shall at least meet the durability requirements of NZS 3604 Table 4.1. Where a higher durability material is specified on the drawings, the higher durability material shall be used. The diameter of a hole for a bolt shall not be less than the bolt diameter nor exceed it by 1.5mm.

For the following bolt diameters use washer sizes as below unless noted otherwise on the drawings:
- up to M8: 25x 25 x 1.5mm;
- up to M12: 50 x 50 x 3mm;
- up to M20: 65 x 65 x 5mm;
- up to M20: 75 x 75 x 6mm.

Round washers may be used proving they are of a thickness and area not less than those specified above.

Subfloor framing - unless noted otherwise on the drawings, cast-in holding down bolts for subfloor framing fixed to concrete foundation walls shall be M12 Grade 304 stainless steel, embedded minimum 150mm into concrete, to the spacings required by NZS 3604, and located centrally on the timber.
Bottom plates - unless noted otherwise on the drawings, cast-in holding down bolts for bottom plates fixed to a concrete slab shall be M12 galvanised, embedded minimum 120mm into concrete, to the spacings required by NZS 3604, and located centrally on the timber.
Framing - timber/timber and timber/steel - Unless noted otherwise on the drawings, M16, hexagonal head mild steel and with 50 x 50 x 3mm washers.
Timber/concrete (dry situations) - Unless noted otherwise on the drawings, Ramset Trubolts, T12140 at maximum 900mm centres - for damp or exterior situations use stainless steel Trubolts.
Bolts shall be tightened until the washer just indents the timber surface. Exposed bolts shall be re-tightened just prior to Practical Completion to remove any slack consequent on timber shrinkage.
Allow to countersink bolt heads and nuts as necessary to clear linings.

Framing Hardware

Proprietary timber framing hardware and fixings, including multigrips, joist shoes, Z nails, gang nails and similar hardware, may be used where specifically approved, or where required on the drawings or by NZS 3604 schedules, in accordance with the manufacturer's requirements.
Proprietary timber framing structural brackets and ties, including post and bearer brackets, beam supports, angle brackets, tie cleats and similar hardware, shall be as noted on the drawings and installed in accordance with the manufacturer's requirements.
Refer to Metalwork or Structural Steel section of this specification for specific design engineered fabricated steel components that connect structural timber framing.

Powder Fastening Systems

Powder powered fasteners are not permitted for fastening structural timber framing unless specifically noted on the drawings. All applications are subject to specific approval.

Adhesives

Aliphatic PVA for dry timber applications - all other adhesives for timber jointing are subject to specific approval or as specified. Check surfaces are in appropriate condition to receive adhesive, and that adhesives are used strictly in accordance with the manufacturer's instructions. Clamp adhesive-jointed timber connections and check alignment of members before the adhesive has set.

4.7.5 Flashings

Flashing materials shall be in accordance with the requirements of NZBC E2/AS1 Sections 2.2 Materials, 4.0 Flashings, Table 20 - Material Selection, Table 21 - Compatibility of Materials in Contact, and Table 22 - Compatibility of Materials Subject to run-off, and as noted on the drawings.
All flashings around windows, doors and other openings and apertures, at internal and external corners, inter-storey junctions, soffit junctions, and at junctions with other building elements and cladding systems, etc., shall all be carefully constructed, fixed and finished to the details shown on the drawings.

4.7.6 Interior Finishing Trim

All interior finishing trim shall be cut to the exact dimensions and fine sanded smooth, and with lightly sanded arrisses, and all fixed with plated finishing pins. Machine staple fixing is NOT acceptable.
Note that even traces of planer marks are unacceptable on architraves. Margins between interior trim and other elements shall be exactly even, and all mitres shall be exact and tight.

4.7.7 Hardware

Finishing Hardware Prime Cost

Allow the Prime Cost Sum allowance of $ .1000 . . for the supply only of selected timber door, cabinet and wet-area (towel hooks, robe hooks, toilet roll holders, etc.) finishing hardware.
Note that this sum does not cover hinges or other opening hardware as specified or noted, and does not cover any hardware for aluminium doors and windows.

4.8 Plywood Cladding

4.8.1 Scope

Supply and install the specified Plywood Claddings to the locations identified on the drawings, complete with all accessories. All aspects of this work shall be in complete accordance with the manufacturer's technical literature and installation guidelines, other relevant product manufacturers' recommendations, and as shown on the drawings.

Refer to Painting for all weather protective coating requirements applied to Plywood Claddings.

The following is a list and a general description of the extent of Plywood Cladding work, which are more specifically defined in the contract documents, required for the completion of the contract works:

5 ROOFING

5.1 Preliminary

Refer to General Conditions of Contract and the Special Conditions in this Specification as appropriate. Read this section in conjunction with all other trade sections.

5.2 Compliance

Comply with the New Zealand Building Code 1992 including all revisions and amendments, Verification Methods where appropriate, and construction principles that are embodied in the Acceptable Solutions.

Comply with all relevant provisions and recommendations of:

1170.2:2011(AS/NZS)	Structural design actions - Wind actions
1397:2001(AS)	Steel sheet and strip - Hot-dip zinc-coated or aluminium/zinc-coated
2295:2006(NZS)	Pliable, permeable building underlays
2728:2013(AS/NZS)	Prefinished/prepainted sheet metal products for interior/exterior building applications - Performance requirements
3604:2011(NZS)	Timber-framed buildings
4200.1:1994(AS/NZS)	Pliable building membranes and underlays - Materials
4200.2:1994(AS/NZS)	Pliable building membranes and underlays - Installation requirements
4217:1980(NZS)	Pressed metal tile roofs
NZBC B2	Durability
NZBC E2/AS1	External Moisture
NZMRM Code of Practice	NZ Metal Roof and Wall Cladding Code of Practice - Version 2.2

5.3 Wide Tray Metal Roofing - Fully Supported

5.3.1 Scope

Supply and install Wide Tray Metal Roofing (fully supported), as specified herein, to the locations identified on the drawings, complete with all accessories required for proper installation and performance. All aspects of this work shall be in complete accordance with the roofing manufacturer's technical literature and installation requirements, the NZ Metal Roof and Wall Cladding Code of Practice, other relevant product manufacturers' recommendations, and as shown on the drawings.

5.3.2 Requirements

Safety

Comply with the Health and Safety at Work Act 2015 (HSWA), and with all relevant Health and Safety at Work Regulations 2016, and with all relevant WorkSafe New Zealand (WorkSafe) Approved Codes

of Practice and WorkSafe Information and Guidance, particularly those for construction and building maintenance.

Warranty - Roofing Material

Roofing Material Product Warranty. Warrant this work against failure of materials under normal use and environmental conditions:

- 15 Years for Perforation: according to the roofing material manufacturer/supplier warranty conditions.
- 15 Years for Coatings: according to the roofing material manufacturer's warranty conditions.
- Provide the Product Warranty on the roofing manufacturer's Standard Warranty Form.
- Commence the warranty from the date of practical completion of the contract works.

Warranty - Installation

Installation Warranty. Warrant this work under normal environmental conditions and use against waterproofing failure:

- 5 Years for Workmanship.
- Provide the Installation Warranty on the roofing installer's Standard Warranty Form.
- Commence the warranty from the date of practical completion of the contract works.

Include a copy of the roofing manufacturer's maintenance requirements with the Installation Warranty.

Wind Performance - Very High Wind Zone

Wide Tray Metal Roofing Wind Performance - Non-Specific Design Wind Zone Classification:

- NZS 3604 Wind Zone: VH = Very High.
- Wind Speed: <50m/s.
- Ultimate Limit State: 1.50kPa.

Refer to the roofing manufacturer's technical literature for wind load design parameters.

Plywood Sarking

Plywood Sarking. Refer to separate specification section - Carpentry. Structural plywood manufactured to the requirements of AS/NZS 2269.

Except where specified otherwise, plywood sarking shall be 17mm thick, H3.2 CCA treated, DD finish, F11 stress grade structural plywood, installed in strict accordance with the manufacturer's requirements and technical literature to the layout, details and fixing requirements indicated on the drawings.

CCA treated plywood must not be used under zinc, aluminium metallic coated or prepainted steel roofing without a roof underlay complying with NZMRM Code of Practice: Table 4.3.1, otherwise it shall be separated by an appropriate underlayment (drainage mat) as described in Section 4.3.11 of the Code of Practice.

5.3.3 Wide Tray Roofing

Double Standing Seam

Double Standing Seam Jointed Trays. Tray depth and width as specified below or as dimensioned on the drawings. Manufactured from the material type, thickness and finish as specified herein.

Minimum Roof Pitch:
- Trays >30mm in height: 3° (approx 1:20) for full-length panels up to 10m long; and 7° (approx 1:8) with cross welt traverse joints.
- Trays <30mm in height: 5° (approx 1:11) for full-length panels up to 10m long; and 7° (approx 1:8) with cross welt traverse joints.

Roofing Panels:
- Panels shall be continuous from ridge to gutter, or where a step is designed into the roof, panels shall be continuous from ridge to step and step to gutter.
- Panel ends must be stop-ended under flashings, and must be installed with a drip-edge flashing along gutter lines.

Traverse Laps:
- Transverse seams on roofs <20 in areas of high or very high wind design loads, must be soldered or sealed.
- A double-lock cross welt transverse joint must be used for joints on roofs >7°, and single-lock cross welts must be used on pitches above 25 or on vertical surfaces.
- Double-lock cross welts must be used in all cases where severe weather conditions exist.
- The maximum length for roof pitches of <30 must be no greater than 10m.
- Where a roof slope exceeds 10m in length, a 50mm high step flashing must be installed at regular intervals to provide for panel expansion in the direction of the fall.

Installed in accordance with the requirements of the roofing system manufacturer and the NZMRM Code of Practice, to the locations and details shown on the drawings.

Profile Dimensions:
Installed Location:

5.3.4 Roofing Material

Natural Zinc - 0.7mm BMT

Wide Tray Metal Roofing. Manufactured from VM Natural Zinc - 0.7mm BMT. Z1-zinc (to BS EN 1179) zinc alloy coil complying with BS EN 988. 7.2 kg/dm^3 density. Atmospheric Classifications C1-C5M and C5I.

5.3.5 Components & Accessories

Roof Underlay

Roof Underlay. Refer to separate specification section.

Vapozinc underlay and separation layer as part of rhinzinc specification.

Fixing Clips

Fixing Clips. Proprietary fixing clips, as specified by the roofing manufacturer, to suit the material and profile of the wide tray metal roofing, and the design and installation requirements.

Each clip shall be screw fixed with the correct fastener type in accordance with the roofing manufacturer's requirements, and be manufactured from metal appropriate to the material and the supporting structure, and with a durability no less than the material being fixed.

Rivets - Zinc material

Rivets - for use with zinc roofing materials - sealed stainless steel rivets, minimum diameter 4.0mm.

Zinc Flashings

Zinc Flashings. Metal roof flashings shall comply with the lap, cover, expansion and compatibility provisions of the NZMRM Code of Practice. Flashings shall be formed to suit the details shown on the drawings, and shall include all folded metal sections required to make the wide tray metal roofing weathertight at:

- the building periphery,
- roof and wall junctions,
- changes of direction in the roof,
- intersections with other buildings,
- any wall penetration,
- junctions with other materials.

Zinc flashings shall be fabricated from the same material as the roofing material - to maintain durability and compatibility requirements. Flashings shall be designed for lateral strength by folding, stiffening or ribbing on external edges, and have a maximum un-stiffened width of 300mm. The minimum thickness for zinc flashings shall be 0.7mm.

Flashing fastenings and fastening frequency shall be in accordance with the NZMRM Code of Practice. Do not fix flashings to timber with a moisture content greater than 18%.

Do not construct flashing joints and flashing junctions in a manner that rely entirely on sealant to maintain weathertightness.

Where a flashing is hidden, or is otherwise difficult to access or replace, it shall have a durability of the life of the building or not less than 50 years.

Compressible Foam Seal

Compressible Seal. Non-bituminous, compressible, closed-cell foam strips. Installed to the details shown on the drawings and in accordance with the roofing manufacturer's requirements.

Sealant

Sealant. Use only neutral-curing silicone or polymer sealant, as advised by the roofing manufacturer, which are compatible with the specified metal roofing and flashing materials and finishes, and are suitable for the required application and use, in accordance with the sealant manufacturer's instructions and to the NZMRM Code of Practice recommendations.

Sealed joints must be mechanically fastened, and excess sealant neatly removed to prevent unnecessary dirt buildup.

Sealant shall only be used to seal between two metal surfaces, do not fill holes or gaps with sealant.

5.3.6 Co-operation

Co-operate with other trades to ensure that all preliminary and preparatory works are completed to specification and as shown on the drawings.

Coordinate to ensure that all roof members required for ridges, hips, valleys, barges, penetrations, junctions with vertical faces, etc. are correctly installed.

Coordinate with the roof drainage system, and generally with other trades as required, to install the specified profiled metal roofing.

Ensure that each section of roof is waterproofed as soon as possible after preparatory work is complete; allow to carry out the works in several operations if necessary to comply with this condition.

5.3.7 Workmanship

Where required by the NZ Building Act 2004 it is the building contractor's responsibility to ensure that all restricted building work is carried out by a Licensed Building Practitioner.

All installation work shall be carried out by experienced and competent tradespersons, familiar with the specified products and installation techniques, in accordance with the roofing manufacturer's requirements and the NZMRM Code of Practice, and to fully comply with all warranty requirements. All work shall be such as to leave a neat, efficient, robust and weathertight installation.

All cutting, fixing and installation techniques, fasteners and sealants shall be exactly as recommended by the roofing manufacturer in accordance with the NZMRM Code of Practice, and with the use of suitable tools and equipment appropriate for the application.

Always maintain isolation of dissimilar materials in accordance with the NZMRM Code of Practice. Isolate dissimilar materials (metal and nonmetal) in close proximity as necessary by painting the surfaces or fitting separator strips. Place isolators between metals and treated timber or cement-based materials. Do not use unpainted lead-sheet or copper materials to come in contact, or allow runoff from these, with galvanised or Zincalume® materials.

5.3.8 Delivery & Handling

Upon delivery to site, inspect roofing materials and reject those items that are found to be damaged, defective or contaminated. Contact the manufacturer/supplier for replacement of rejected items at time of delivery to site.

Store wide tray metal roofing, flashings and accessories undercover, clear of level ground, on bearers at evenly spaced centres as recommended by the roofing manufacturer. Keep stored materials and accessories dry and protected from damage and contamination at all times.

Handle materials in accordance with the manufacturer's requirements and in a manner that prevents damage to or deterioration of the material, including surface marking. Do not used damaged or defective materials or products, or products that are beyond their designated shelf life.

Installers shall be familiar with and comply with the manufacturer's safe handling requirements and precautions for use, and shall use appropriate safety gear when handling materials.

Installers shall conform with all relevant WorkSafe NZ Guidelines and Codes of Practice - in particular the Best practice guidelines for working on roofs and the OSH Guidelines For the Provision of Facilities and General Safety in the Construction Industry.

For all work undertaken on the roof, installers shall always wear soft, clean footwear with a light-coloured sole. Do not walk on translucent/natural lighting sheet.

5.3.9 Preparation

General

Prior to installation, carry out all necessary inspections and preparatory work required, and ensure that all preliminary works by other trades has been completed to specification and as shown on the approved drawings.

Do not commence installation until all necessary preliminary works by others is complete and to the required standard. The commencement of work shall be deemed to indicate full acceptance by the installer that all preliminary works by other trades is complete.

Supporting timber structures shall comply with NZS 3604, or with NZS 3603 and AS/NZS 1170 for specific design, and have a maximum moisture content in accordance with the requirements of NZS 3603 at the time of installation.

Supporting lightweight steel framed structures shall meet the requirements of AS/NZS 4600 or the NASH Standard for Residential and Low-rise Steel Framing, Part 1: Design Criteria.

Supporting steel structures shall comply with NZS 3404.

Roof Structure Check

Roof Structure - check all aspects of preparatory works, including but not limited to:

- Check that the plywood sarking has been correctly installed in accordance with the manufacturer's requirements and to the layout and details shown on the drawings, is fully supported on all edges, and that all fixings are correctly spaced, and set flush with or just below the plywood surface.
- Check that barge and fascia boards have been installed to the correct line and plane, with all edge blocking complete and secure.
- Check that valley gutter and hidden gutter framing is to the required dimensions, with solid backing supports securely fixed, true to line and plane.
- Check that internal gutter membrane linings are properly dressed back and adhered to a solid substrate along the roof edge as shown on the drawings.
- Check that trimming for roof penetrations, and roof/wall junction blocking, and all necessary work by other trades is complete.

- Check that solid backing required for fully supported roofing is complete and securely fixed in accordance with the approved drawings.

5.3.10 Completion

Check that the fully-supported wide tray metal roofing, components and accessories have been installed in accordance with the roofing manufacturer's requirements, to the layout and details shown on the drawings.

Check for defective work and materials - replace and/or repair as necessary.

Sweep down the completed roof and clean out spouting, gutters and rainwater pipes.

Leave all of this work complete and weathertight in accordance with the roofing manufacturer's requirements and the NZMRM Code of Practice, and to fully comply with all warranty requirements.

Leave the completed works and surrounding surfaces clean and free of debris and rubbish. Remove all rubbish and excess material from the site.

Issue to the Owner a copy of the roofing manufacturer's maintenance requirements, and a copy of the roofing material manufacturer/supplier 'Product Warranty', and a copy of the installer's 'Installation Warranty'

5.4 Gerard Roofs Pressed Steel Tiles

5.4.1 Scope

Supply the selected Gerard roofing tiles and install them in the areas identified on the Roof Plan. All aspects of the work shall be in complete accordance with Gerard's installation instructions (check 0800 104 868 for latest editions) and other relevant Product Manufacturers Recommendations.

Note that substitutions are not permitted.

5.4.2 Tile

Colortile, Satin Finish. Reuse existing tiles to suit the new layout . Allow to patch exposed areas after completion of zinc entry roof.

5.4.3 Trim

Angle Trim.

5.4.4 Installation

Co-ordinate to set-out the roof fixing battens etc. very carefully to absolutely minimize tile cutting. Coordinate to ensure that the timber members required for ridges, hips, valleys, penetrations, junctions with vertical faces, etc. are correctly in place to Gerard detailing, and for barges the framing suits the trim selected. Check that the underlay is correctly installed with turn-ups to walls, parapets, openings, skylights, etc. as required, and that pre-installed flashings are correctly in place. Ensure the

fixing battens are sized to suit the rafters spacing and are fixed to NZS 3604 Table 10.12 requirements. Note and co-ordinate with the Installer of the specified Rainwater System (refer Plumber Section).

Touch-up any damage to coatings with Gerard's finishing kit. Remove trade debris from the roof and from the site progressively, and on completion leave the roof and rainwater system completely clean. Advise others to minimize walking on the roof, and if unavoidable to use soft-sole shoes and place the weight over battens only. Provide owner with a copy of maintenance instructions and warranty.

6 ALUMINIUM JOINERY

6.1 Preliminary

Refer to General Conditions of Contract and the Special Conditions in this Specification as appropriate. Read this section in conjunction with all other trade sections.

6.2 Compliance

Comply with the New Zealand Building Code 1992 including all revisions and amendments, Verification Methods where appropriate, and construction principles that are embodied in the Acceptable Solutions.

Comply with all relevant provisions and recommendations of:

1170.2:2011(AS/NZS)	Structural design actions - Wind actions
1170.3:2003(AS/NZS)	Structural design actions - Snow and ice actions
1170.5:2004(NZS)	Structural design actions - Earthquake actions - New Zealand
2208:1996(AS/NZS)	Safety glazing materials in buildings
3504:1979(NZS)	Specification for aluminium windows
3602:2003(NZS)	Timber and wood-based products for use in building
4211:2008(NZS)	Specification for performance of windows
4218:2009(NZS)	Thermal insulation - Housing and small buildings
4223.1:2008(NZS)	Code of practice for glazing in buildings - Glass selection and glazing
4223.2:2016(NZS)	Glazing in buildings - Part 2: Insulating glass units
4223.3:2016(NZS)	Glazing in buildings - Part 3: Human impact safety requirements
4223.4:2008(NZS)	Glazing in buildings - Part 4: Wind, dead, snow, and live actions
4284:2008(AS/NZS)	Testing of building facades
4666:2012(AS/NZS)	Insulating glass units
4667:2000(AS/NZS)	Quality requirements for cut-to-size and processed glass
4668:2000 (AS/NZS)	Glossary of terms used in the glass and glazing industry
NZBC B2	Durability
NZBC E2	External moisture
NZBC F2	Hazardous Building Materials
NZBC F4/AS1	Safety from falling
NZBC H1	Energy Efficiency
WANZ	SFA 3503-03:2005 Anodising Standard
WANZ (PQAS)	Powder Coating Quality Assurance System (PQAS)

6.3 Aluminium Windows & Doors from APL - Window Solutions

6.3.1 Scope

Supply and install the specified Aluminium Windows and Doors from APL- Window Solutions to the locations and details shown on the drawings; complete with all components (flashings, support mechanisms, brackets, etc) where required, for proper installation and operation; and commissioned to the required performance and functionality. All aspects of this work shall be in strict accordance with the manufacturer's technical literature and installation requirements (check www.aplnz.co.nz, call 07 849 8888, or email techinfo@aplnz.co.nz for the latest editions), other relevant product manufacturers' recommendations, and as shown on the drawings.

No substitutions are permitted for the specified Aluminium Windows and Doors from APL - Window Solutions.

6.3.2 Requirements

Warranty

Warranty APL - Window Solutions Materials & Workmanship Warranty:
- 5 Years Warranty Materials and Workmanship - for all APL window and door products.
- Provide the Materials & Workmanship Warranty on the Manufacturer's Standard Warranty Form.
- Commence the warranty from the date of practical completion of the contract works.

Include a copy of the appropriately branded "Care and Maintenance for Windows and Doors" document with the Warranty.

Shop Drawings

Prepare and submit to the Main Contractor for verification and approval prior to the commencement of works, Shop Drawings describing the general arrangement and connection to the building envelope of the specified window & door systems.

These shall include, but not be limited to:
- Design calculations - where required;
- Dimensioned elevations of all aluminium joinery elements (typical scale = 1:50; minimum scale = 1:100);
- Complete details of the installation construction, connections and all support systems (typical scale = 1:2; minimum scale = 1:5);
- Sealant types and backing rods, etc;
- Provision for movement, thermal, wind load and/or seismic - where required;
- Coordination requirements/issues with other works and trades - where applicable;
- A schedule of materials, finishes, componentry, fittings, fixings and fastenings - where required.

Producer Statement PS1

If required, as a component of the consent process APL can provide a "Letter of Intended Design" outlining the evidence used in the selection of the specified window and door systems. Upon request, the successful tenderer/manufacturer shall furnish a completed Producer Statement PS1 (Design) as confirmation that the specified window and door systems complies with the relevant

clauses of the New Zealand Building Code. To ensure accuracy, the PS1 Producer Statement will be prepared as a part of the shop drawing process but will not serve as a product warranty or guarantee of compliance.

6.3.3 Performance Criteria

General Performance - Wind Zone: Very High
The specified APL Aluminium Window and Door Systems shall comply with the requirements of NZS 4211 for all relevant clauses.

Wind Load - Non-Specific Design Wind Zone Classification. The specified APL Aluminium Window and Door Systems joinery installation is located in a NZS 3604 Wind Zone: VH - Very High; with a maximum pressure of 1.25kPa SLS and 1.76kPa ULS.

Durability - Exposure Zone D: High
Durability. The specified APL Aluminium Window and Door Systems joinery installation is located in a NZS 3604 Exposure Zone D: High - within a coastal area with high risk of wind blown sea-spray salt deposits.

ISO 9223 Category: C4 High. Characterised by light salt deposits, a frequent smell of salt in the air. Typically commencing from Very Severe Zone up to 500 metres or more inland from breaking surf; or in the immediate vicinity of calm salt water such as harbour foreshores.

All aspects of the specified APL Aluminium Window and Door System, including surface finishing and hardware, shall meet the durability requirements for the given Exposure Zone in accordance with NZBC B2.

6.3.4 APL Alumnium Joinery Range

Residential Series Thermal Heart
'Residential Series Thermal Heart' Windows and Doors, fully glazed, finished, and complete with hardware and other specified components - all as specified in the following clauses. Manufactured and installed in accordance with the manufacturer's requirements to the locations, configurations and details shown on the drawings and schedules.

6.3.5 Awning & Casement Windows

Residential Series Thermal Heart
Awning and casement windows shall be manufactured using Residential Series Thermal Heart frame, with a 46mm platform incorporating a polyamide thermal break, and a cover facing to overlap the wall cladding.

Specification:
- Mullions, Transoms: with/without external fins, with guidance from APL Span Tables, shall be selected by the manufacturer for compliance with the project wind load.
- Beads: Square (*default*) or Sloping - (*if not specified, the default shall apply*).
- Sashes: Pocket Glazed or Bead Glazed - as specified below (*if not specified, the default shall apply*).

- Glass: Double glazed; complying with NZS 4223.1. Refer to Glazing and Glass clauses.
- Finish: Refer to Aluminium Finish clause.
- Reveals: Refer to Jamb Liner clause.
- Furniture: Refer to Hardware & Furniture clause.

Refer to the Window & Door Schedule drawings for specific requirements of individual elements.

Manufactured and installed in accordance with the manufacturer's requirements to the locations, configurations and details shown on the drawings and schedules.

Sashes:

6.3.6 Sliding Windows

Residential Series Thermal Heart - Horizontal Sliding Windows
Horizontal sliding windows shall be manufactured from Residential Series Thermal Heart sliding window frames incorporating a polyamide thermal break.

Specification:
- Mullions, Transoms, Stiles, Interlockers: with guidance from APL Span Tables, shall be selected by the manufacturer for compliance with the project wind load.
- Glass: Single glazed or double glazed; complying with NZS 4223.1. Refer to Glazing and Glass clauses.
- Finish: Refer to Aluminium Finish clause.
- Reveals: Refer to Jamb Liner clause.
- Furniture: Refer to Hardware & Furniture clause.

Refer to the Window & Door Schedule drawings for specific requirements of individual elements.

Manufactured and installed in accordance with the manufacturer's requirements to the locations, configurations and details shown on the drawings and schedules.

6.3.7 Sliding Doors

Residential Series Thermal Heart - Sliding Doors
Sliding doors shall be manufactured from APL-branded Residential Series Thermal Heart sliding door frames with fibre-reinforced nylon thermal breaks, and with fixed and sliding door panels.

Specification:
- Mullions, Transoms, Stiles, Rails, Vision Rails: with guidance from APL Span Tables, shall be selected by the manufacturer for compliance with the project wind load.
- Glass: Single glazed or double glazed; complying with NZS 4223.1. Refer to Glazing and Glass clauses.
- Finish: Refer to Aluminium Finish clause.
- Reveals: Refer to Jamb Liner clause.
- Furniture: Refer to Hardware & Furniture clause.

Refer to the Window & Door Schedule drawings for specific requirements of individual elements.

Manufactured and installed in accordance with the manufacturer's requirements to the locations, configurations and details shown on the drawings and schedules.

6.3.8 APL Entrance Door Range

Entrance doors shall be from the APL 'Axis' Entrance Door range. Refer to Entrance Door Style clause for the Axis Entrance Door model/configuration number(s) and details. Installed in accordance with the manufacturer's requirements to the locations, configurations and details shown on the drawings and schedules.

6.3.9 Aluminium Finish

The specified aluminium joinery shall be powder coated with DULUX Duratec® to the specified colour. Nominal 50 - 90 micron thick coating (minimum 50 microns). Duratec® has a 20 year warranty on film integrity, and a 15 year warranty on colour integrity.

DULUX Duratec® meets and/or exceeds the performance requirements for AAMA 2604-10.

DULUX Duratec® is suitable for coastal and high-rise commercial applications situated in NZS 3604 Exposure Zone B, C or D.

DULUX Duratec® coatings shall be factory-applied by a Dulux Registered Applicator to the requirements of AS 3715 and to fully comply with all Dulux NZ Ltd warranty requirements.

All substrate preparation and treatments, and powder coating application and finishing techniques, shall be exactly as recommended by the manufacturer.

DULUX Duratec® colour: To match existing colour

6.3.10 Glazing

Standard Double Glazing

Standard Double Glazing. Air-filled and sealed insulating glass units (IGUs); with clear float glass in accordance with NZS 4223.1 and NZS 4223.3. Double glazed IGUs shall be manufactured and installed in accordance with AS/NZS 4666. Factory-fitted to awning and/or casement windows, sliding and/or bi-fold windows, hinged and/or sliding doors as identified on the drawings and schedules.

6.3.11 Glass

Clear Float Glass

Clear Float Glass. Clear annealed float glass, complying with AS/NZS 4667 and in accordance with NZS 4223.1. Installed to the locations identified on the drawings and schedules.

Manufacturer, brand name & type:

6.3.12 Jamb Liners

Paint-quality Timber Jamb Liners - Grooved. Manufactured from 19mm thick, dressing-grade, finger-jointed or clear Radiata pine complying with NZS 3602, H3.1 treated. Mitred corner joints; factory pre-primed on all faces.

Jamb liners shall be straight and true and free of warp or distortion. The depth of the jamb liners shall be sized to suit the wall construction thickness and grooved to suit the interior lining thickness as shown on the drawings. Jamb liners will be grooved for 10mm plasterboard unless nominated otherwise.

Except where indicated otherwise on the drawings and schedules, jamb liners shall be fitted to the head, jambs and sill of each aluminium joinery element.

Liase with client to discuss existing reveal detail. Note the entry high windows have gibbed reveals.

6.3.13 Flashings & Support Bars

Aluminium Head Flashings

Aluminium Head Flashings shall be selected from the APL range of extruded aluminium flashings, suitably sized to suit the claddings and construction types in accordance with NZBC E2/AS1 and shown on the drawings; and finished and colour-matched with the aluminium windows and doors. All aluminium joinery flashings shall be supplied and installed by the APL aluminium joinery manufacturer.

Aluminium Sill Support Bar - Cavity Construction

Aluminium Sill Support Bar for Installations in Drained Cavity Construction. Extruded aluminium sill support bar, with built-in drainage and ventilation, for continuous support to the window or door unit. Mill finish aluminium. Sill support bars shall be used and installed in accordance with the requirements of NZBC E2/AS1, and comply with BRANZ Evaluation Method EM6, and be sized to suit the cladding thickness and weight of the window or door.

6.3.14 Co-operation

Co-operate with other trades to ensure that all preliminary and preparatory works are completed to specification and as shown on the drawings.

Coordinate with other trades to establish exact sizes for all aluminium window and door frames; and to ensure that each element correctly allows for the installation and finishing of exterior claddings and interior linings and any specific detailing shown on the drawings; and generally to install all APL aluminium windows, doors and accessories as required.

6.3.15 Workmanship

Where required by the NZ Building Act 2004 it is the building contractor's responsibility to ensure that all restricted building work is carried out by a Licensed Building Practitioner.

Aluminium window and door joinery fabrication, assembly and installation work shall be carried out by experienced and competent tradespersons, authorised to manufacture and install APL - Window

Solutions aluminium window and doors, under controlled supervision and procedures, to fully comply with all warranty requirements and in accordance with the manufacturer's requirements.

Maintain and comply with industry-recognised quality control and assurance procedures to ensure that all stages of work are carried out to the highest standard.

All fabrication and assembly processes and techniques, materials and accessories shall be exactly as recommended by the manufacturer and shall be carried out using suitable machinery, tools and equipment, in a factory workshop.

All work shall be such as to leave a neat, efficient, robust and weathertight installation.

Leave aluminium joinery and glazing clean and free from damage and defects of any kind.

6.3.16 Delivery & Handling

Aluminium joinery frames shall be braced and restrained as necessary for transportation and delivery to site. All surfaces, including glass, shall be appropriately protected from marking and damage during manufacture, delivery and installation.

Inspect all aluminium joinery units upon delivery and reject any damaged or defective items. Contact the manufacturer for replacement of rejected items at time of delivery to site. Do not use or install damaged or defective materials, products and joinery elements.

Store aluminium windows, doors and accessories undercover, off the floor, on a flat, even and level surface as recommended by the manufacturer and in a manner that prevents any frame distortion and surface damage and deterioration. Keep stored aluminium joinery dry and protected from damage, moisture and contamination at all times.

Handle aluminium joinery units and accessories in accordance with the manufacturer's requirements and in a manner that prevents distortion to joinery frames and any damage to the elements - including surface marking. Retain manufacturer's protective coverings for as long as possible, and remove them upon completion.

Installers shall be familiar with and comply with the manufacturer's safe handling requirements and precautions for use, and shall use appropriate safety gear and equipment during all stages of manufacture and installation.

Installers shall conform with all relevant WorkSafe NZ Guidelines and Codes of Practice - including the OSH Guidelines For the Provision of Facilities and General Safety in the Construction Industry.

6.3.17 Preparation

Prior to installation, carry out all necessary inspections and preparatory work required, and ensure that all preliminary works by other trades has been completed to specification and as shown on the drawings.

Do not commence installation until all necessary preliminary works by others is complete and to the required standard. The commencement of work shall be deemed to indicate full acceptance by the installer that all preliminary works by other trades is complete.

Check that all window openings and door openings are correctly sized for fitting tolerances, are square and correctly aligned, with all sides plumb, level and true to line and plane.

Check window and door openings adjoining other building elements to ensure that all necessary works have been completed that will enable the windows and/or doors to be installed correctly and as shown on the drawings.

Supporting concrete structures shall be within the scope of NZBC E2/AS3, and comply with NZS 3109. New concrete must have aged for a minimum of 28 days prior to installation.

Supporting concrete masonry structures shall be within the scope of NZBC E2/AS3, and shall comply with NZS 4229, or with NZS 4230 and AS/NZS 1170 for specific design, and NZS 4210.

Supporting timber structures shall comply with NZS 3604, or with NZS 3603 and AS/NZS 1170 for specific design, and have a maximum moisture content in accordance with the requirements of NZS 3602 at the time of installation.

Supporting lightweight steel framed structures shall comply with NZ NASH 3405, or the NZBC for specific design.

Supporting steel structures shall comply with NZS 3404.

Concrete Slab Rebates: check that concrete slabs have been correctly rebated to accommodate door sills and floor-mounted window frames as detailed on the drawings, and that any required waterproofing membrane has been applied to the rebates.

6.3.18 Installation

Install metal flashings to window and door openings, accurately level and plumb, and to the required tolerances as detailed - with the head flashing weathering jamb flashings, jamb flashings weathering sill flashing, and sill flashings open (draining) to the exterior.

Overlap and the top edge of head flashings with flexible flashing tape, or a section of additional flexible wall underlay, along the top edge to ensure water drains to the exterior.

Except where windows and doors are recessed, and where detailed otherwise, all head flashings shall extend minimum 30mm beyond the edge of the window/door frame.

Materials for flexible flashings at window and door openings in masonry veneer construction shall be in accordance with NZBC E2/AS1 9.2.4.

Flexible head flashings shall be turned into the steel lintel or mortar course as detailed, and shall extend minimum 200mm beyond the opening perp-ends in the masonry veneer (drainage holes formed in the masonry veneer by the Bricklayer).

Staple-fix flexible jamb flashings to the back of window and door jambs - ensure flashing width provides sufficient face cover over the face of the wall underlay.

Flexible sill flashings shall be formed with a drip edge as detailed and extend minimum 200mm beyond the opening perp-ends in the masonry veneer. Overlap and seal the top edge of flexible sill flashings with flexible flashing tape returned into and along the opening to ensure water drains to the exterior.

Install metal head flashings to window and door openings level and to the required tolerances as detailed. Overlap head flashing upstands with flexible flashing tape to ensure water drains to the exterior.

Install metal sill tray flashings with stop ends as detailed.

Installation of aluminium window and door joinery shall be to the requirements of the approved shop drawings and installation details, including fixings and fasteners, flashings, bedding compounds, pointing sealants, weathering sealants, and other components and accessories required for proper installation.

Use only fasteners compatible with the materials involved, as recommended by the window manufacturer and to comply with durability and performance requirements. Fixings and fasteners exposed to weather shall be aluminium or Grade 316 stainless steel. Fixings and fasteners not exposed to weather may be galvanised in accordance with AS/NZS 4680.

Set proprietary plastic packers, sized to the required installation tolerances, to the formed opening at the appropriate fixing spacings for secure installation and allowance for wind loading for windows.

Install aluminium windows and doors exactly square, true to line, plumb and level for proper operation of opening sashes and door leaves, and with fixings fastened through jamb liners and packers.

Door installation shall allow for a minimum clearance gap of 5mm above the specified floor covering in the space that the door opens into.

Form a continuous air-tight seal between the window/door frames and the adjacent structure with a proprietary expanding foam, or appropriate sealant, to a depth of 15mm - 20mm over PEF backing rod at head, jambs and sill.

Commission opening windows and doors, sliding carriage assemblies, and all moving components to the required operation, performance and tolerances, and ensure that all hardware is in full working order.

© Smartspec 2017

Weather-seal frame jambs etc. to adjacent surfaces (or to each other) as detailed or as required by the window manufacturer, to achieve a fully weathertight installation.

Sealants shall be BRANZ approved for the application and be compatible with all surfaces and any applied finish.
Insert closed cell PEF backing rods or a polyethylene bond breaker tape slip where required and as shown on the drawings.

Ensure substrates are clean and dry; mask off adjacent surfaces; prime substrates and apply sealant in accordance with the sealant manufacturer's requirements and tool finish to a smooth, even surface.

Where required and as shown on the drawings, install aluminium wind deflection or pressure relief angles, over the head and jambs of frames installed within a recessed opening, prior to weather-sealing frames.

6.3.19 Completion

Check that APL aluminium window and door joinery and accessories have been installed, glazed and finished correctly and fully tested for weathertightness.
Check that all opening window sashes, doors, sliding carriage assemblies and all moving components have been commissioned to the required operating performance and functionality.
Check that all hardware, locks, latches and handles are firmly fixed in place without restricting the operation of their moving parts, and that latches and locks fully engage with strikes and keepers and are free of slack when engaged.

Check all aluminium joinery elements for damage, defects, faults and weathertightness - carry out repairs and/or replace elements as necessary in accordance with the manufacturer's instructions to the required standard.

Remove applied safety indicators and protective coverings, and clean all joinery surfaces inside and out and leave perfectly clean.

Leave this work complete, weathertight and leak-free, and in full working order to the required operating performance and functionality in accordance with the manufacturer's warranty requirements. Leave all locking keys with the Contractor.

Leave the surrounding work area clean and free of rubbish. Remove rubbish and waste material from the site.

Issue to the Owner a copy of the manufacturer's maintenance requirements and a copy of the APL Product and Installation Warranty for the installed aluminium windows and doors.

Provide all necessary Producer Statements.

7 INSULATION

7.1 Preliminary

Refer to General Conditions of Contract and the Special Conditions in this Specification as appropriate. Read this section in conjunction with all other trade sections.

7.2 Compliance

Comply with the New Zealand Building Code 1992 including all revisions and amendments, Verification Methods where appropriate, and construction principles that are embodied in the Acceptable Solutions.

Comply with all relevant provisions and recommendations of:

3604:2011(NZS)	Timber-framed buildings
4220:1982(NZS)	Code of practice for energy conservation in non-residential buildings
4243.1:2007(NZS)	Energy efficiency - Large buildings - Building thermal envelope
4246:2016(NZS)	Energy efficiency - Installing bulk thermal insulation in residential buildings
4859.1:2002(AS/NZS)	Materials for the thermal insulation of buildings - General criteria and technical provisions

7.3 Thermal Insulation

7.3.1 Scope

Supply and install the selected products as thermal insulation to the specified R-values, complete with all accessories, to the floors, walls, ceilings, roofs, and other thermally insulated building elements, as noted and shown on the drawings. All aspects of this work shall be in accordance with the product manufacturer's technical literature and installation requirements, other relevant product manufacturers' recommendations, and as shown on the drawings.

7.3.2 Co-operation

Co-operate with other trades to ensure that all preliminary and preparatory works are completed to specification and as shown on the drawings.
Co-ordinate with other trades to install all thermal insulation as required.

7.3.3 Workmanship

All installation work shall be carried out by experienced and competent tradesmen, familiar with the specified products and installation techniques, in accordance with the manufacturer's installation requirements, and as noted and detailed on the drawings.
Store and handle products in accordance with the manufacturer's recommendations, keep dry and protect from damage. Do not compress fibre insulation bales. Do not use damaged or defective insulation products and accessories.
The building must be completely enclosed and water tight before installation commences with the exception of roof insulation when installed with roofing. Ensure the moisture content of timber

framing is no greater than 18% prior to installing insulation to timber framed elements. Always maintain the full insulation thickness to ensure the required thermal values are achieved. Do not install insulation pads or blankets into closed cavities that are less than the stated insulation nominal thickness.

7.3.4 Product

Glass Fibre Pads
Glass fibre thermal insulating pads.

Manufacturer, brand name & type: Pink Batts
Thickness & R-Value: R3.6 skillion roof insulation 165 mm thick
Location: to ceiling over the entry .

7.3.5 Installation

Wall Insulation - Glass Fibre Pads
Install glass fibre insulation pads, complete with accessories, friction fitted between wall studs and dwangs etc. and held in place in accordance with the manufacturer's installation recommendations. Completely fill the framing voids, leave no gaps at the edges or at penetrations etc, and maintain full insulation pad thickness. Support external wall insulation with vertical strapping tape at 400mm centres to the outside face, stainless steel stapled to the framing.

Ceiling Insulation, Skillion Roof - Glass Fibre Pad
Install glass fibre insulation pads, complete with accessories, oversized and friction fitted between the rafters and behind the ceiling battens in accordance with the manufacturer's installation recommendations. Maintain a minimum 25mm clearance between the top of the insulation and the roof underlay. Leave no gaps along the insulation pad edges and joints, and at the roof/wall junction - cover at least 50% of the exterior top plate width (except where obstructed by other framing). Separate ceiling insulation 200mm from recessed light fittings and other recessed electrical fittings; refer to the drawings for containment requirements around recessed electrical fittings.

7.3.6 Completion

Check that all insulation has been installed correctly and is correctly supported and that all edges, joins and ends are fully closed without gaps. Check for damage and faults and repair or replace as necessary. Collect and remove from site all rubbish and waste material.
Issue to the Owner a copy of any product maintenance requirements and a copy of the Thermal Insulation Product and Installation Warranties for the completed works.

8 TILING

8.1 Preliminary

Refer to General Conditions of Contract and the Special Conditions in this Specification as appropriate. Read this section in conjunction with all other trade sections.

8.2 Compliance

Comply with the New Zealand Building Code 1992 including all revisions and amendments, Verification Methods where appropriate, and construction principles that are embodied in the Acceptable Solutions.

Comply with all relevant provisions and recommendations of:

2358:1990 (AS)	Adhesives - For fixing ceramic tiles
3103:1991(NZS)	Specification for sands for mortars and plasters
3122:2009(NZS)	Specification for Portland and blended cements (General and special purpose)
3661.2:1994(AS/NZS)	Slip resistance of pedestrian surfaces - Part 2: Guide to the reduction of slip hazards
3740:2010 (AS)	Waterproofing of domestic wet areas
3958.1:2007(AS)	Guide to the installation of ceramic tiles
4586:2004(AS/NZS)	Slip resistance classification of new pedestrian surface materials
4858:2004(AS/NZS)	Wet area membranes
BRANZ Good Practice Guide	Tiling
NZBC B2/AS1	Durability
NZBC D1/AS1	Access Routes
NZBC E3/AS1	Internal Moisture

8.3 Tiling

8.3.1 Scope

Supply, install and finish all Tiling works, complete with all necessary components and accessories required for proper installation and performance, as specified herein and to the locations, layouts and details shown on the approved drawings. All aspects of this work shall be carried out to comply with the New Zealand Building Code and relevant standards, and in accordance with the approved project design documentation, and with any relevant product manufacturers' technical literature.

The following is a list and a general description of the extent of Tiling work, which are more specifically defined in the contract documents, required for the completion of the contract works:

8.3.2 Requirements

Quality Assurance

Maintain and comply with industry-recognised quality control and assurance procedures to ensure that all stages of Tiling work are carried out to the highest standard.

Inspection & Acceptance of Tiling Work

Carry out all necessary pre-installation, installation and finishing inspections of Tiling for each area of work in accordance with the requirements of industry best practice recommendations and code of practice guidelines.

Complete all necessary Pre-Installation/Application Checklists prior to installing proprietary under-tile waterproofing systems and heating systems and floor levelling systems, and relevant Installation/Application Checklists.

Complete all necessary Installation/Application Sign-Off Certificates and before undertaking subsequent work or handing over.

Defective Materials & Work

Should defective materials and/or work be found at any time before the final acceptance of the work, it shall be rejected. Rejected Tiling materials and work shall be repaired and/or replaced to the satisfaction of the Architect/Designer, without delay and at no additional cost to the Principal.

Evidence of Slip Resistance

If requested, provide certified evidence of the slip resistance classification for each floor tile specified.

8.3.3 Performance

Slip-Resistance Performance of Access Routes

Slip-Resistance Performance of Access Routes. The slip-resistance performance of tiled access routes, ramps and stairs shall comply with the requirements of NZBC D1/VM1 and NZBC D1/AS1.

Interior Wet Area Performance

Interior Wet Area Performance. The performance of tiled interior wet areas shall comply with the requirements of NZBC E3/AS1.

8.3.4 Co-operation

Co-operate with other trades to ensure that all preliminary and preparatory works are completed to specification and as shown on the drawings.

Coordinate with other trades to install tiling as required, and to ensure that:
- appropriate tolerances and clearances allow for adjacent finishes, fixtures and fittings, etc; and
- penetrations for piped and cabled services are correctly located to maintain tile integrity and tiling performance.

8.3.5 Workmanship

Where required by the NZ Building Act 2004, it is the building contractor's responsibility to ensure that all restricted building work is carried out by a Licensed Building Practitioner.

All Tiling work shall be carried out to best trade practice by qualified and experienced tradespersons, familiar with the specified materials and installation and finishing techniques, in accordance with AS 3958.1 and relevant product manufacturers' technical literature, to the layout and details shown on the approved drawings, and to fully comply with all warranty requirements.

Submit evidence of experience on request, e.g. National Certificate in Floor and Wall Tiling, or certified member of Master Plasterers and Tilers Association.

All substrate preparation, tile laying and tiling accessories application and finishing techniques shall be exactly as recommended by the specified product manufacturer. All work shall be such as to leave a neat, efficient and robust installation.

Interior wet-area tiling shall be waterproof and installed over a waterproof membrane as shown on the drawings.
Exterior floor tiling shall be waterproof and weathertight, and where necessary installed over a waterproof membrane as shown on the drawings.

As recommended by the tile manufacturer, use only an approved adhesive that is compatible with the specified tile, its substrate and its application/use.

Where necessary, delay tiling to allow maximum curing and settling and initial creep of the substrates, particularly to load bearing structural elements.

Do not cover or bridge movement control joints with tiles and tile underlay.

Tiling shall not be undertaken when the ambient and surface temperatures are outside the specified product manufacturer's permissible temperature range.

Where necessary, mask off and protect from contamination adjacent surfaces, joinery, fixtures and finished work before commencing.

Exterior tiling shall not be undertaken during inclement weather. As necessary and in accordance with the manufacturer's requirements, protect exterior tiling from rain, hot dry winds and direct sunlight to aid proper drying and curing.

Leave all tiled surfaces clean, sound, and free from blemishes of any kind.

8.3.6 Delivery & Handling

Upon delivery to site, inspect the tile packs and reject those items that are found to be damaged, defective or contaminated. Contact the supplier for replacement of rejected items at time of delivery to site.

Do not use damaged, defective or contaminated materials, or products that are beyond their designated shelf life.

Store all tiling materials undercover, in a weatherproof environment, off the floor, on a flat, even and level surface in accordance with the manufacturer's requirements. Keep products and materials dry, out of direct sunlight and protected from damage, moisture and contamination at all times.

Handle tiling materials in accordance with the manufacturer's requirements and in a manner that prevents damage to and contamination of the materials and works.

Installers shall be familiar with and comply with all associated product Safety Data Sheet precautions for use, and use appropriate safety gear when handling materials.

Installers shall conform with all relevant WorkSafe NZ Guidelines and Codes of Practice - including the OSH Guidelines For the Provision of Facilities and General Safety in the Construction Industry.

8.3.7 Preparation

General

All substrates to be tiled shall be structurally sound, even and smooth, clean, dry, and free from dirt, dust, grease, oil, wax, paint residue, loose plaster and laitance, curing compounds and other materials and contaminants likely to affect the bonding and performance of the specified tile adhesive and grout.

Carry out all necessary moisture readings of substrates. Do not commence installation until the moisture readings for the whole area are below the required level.

Carry out all necessary substrate inspections and preparatory work in accordance with the relevant product manufacturer's recommendations prior to application.

Check that the substrate is free of voids and depressions, and is in correct alignment - true to line, level and/or plumb, and to the falls indicated on the drawings.

Check that all fixtures, fittings and embedded items are correctly installed, and that all substrate edges are completed as detailed.

Confirm the location of any movement control or crack control joints prior to commencement of the works, and ensure that they are appropriately trimmed. Do not cover or bridge movement control joints with tiles, adhesive and grout.

Allow self-levelling underlayments and mortar screeds to properly cure in accordance with the manufacturer's recommendations before commencing tiling.

Allow new concrete substrates to cure for at least four weeks prior to tiling.

Ensure that the back of each tile is clean and free from dust or other contaminants prior to laying.

The commencement of work on each section/area shall be deemed to indicate full acceptance by the Tiler that all preparatory works by other trades are appropriate to achieve the required finished results.

Under-floor Heating Systems

Turn off working in-slab under-floor heating systems at least 48 hours prior to installation. Underfloor heating must remain off during installation and for at least 48 hours, or in accordance with the adhesive manufacturer's requirements, after installation.

Existing Concrete Floor

Existing Concrete Floor - check all aspects of preparatory works, including but not limited to:
- Remove any existing floor covering and adhesive and surface contaminants.
- Grind off any high spots, and using a proprietary levelling compound repair flush with feathered edges any low spots or damaged areas, then grind smooth.
- Mechanically grind or acid etch very dense concrete surfaces and any surface that is glazed to the extent that may compromise adhesion.
- Leave the surface clean, free of dust and surface contaminants.
- Check that any protruding or exposed bare metal has been treated with a suitable corrosion-inhibiting primer.

Plasterboard Wall Lining

Plasterboard Lining - check all aspects of preparatory works, including but not limited to:
- Check that the plasterboard sheets have been installed in accordance with the manufacturer's requirements, are supported on all edges on framing, are securely fastened, and that all joints and junctions have been stopped flush with reinforcing tape embedded in the jointing compound.
- Check junctions with all other substrates and elements, ensuring that all necessary works have been completed as detailed.
- Check that all apertures, openings, edges and expansion and movement control joints are completed as detailed.

Fibre Cement Sheet Wall Lining

Fibre Cement Sheet Wall Lining - check all aspects of preparatory works, including but not limited to:
- Check that the fibre cement sheets have been installed, jointed and fixed in accordance with the manufacturer's requirements and as indicated on the drawings, and that all sheet edges are fully supported.
- Check junctions with all other substrates and elements, ensuring that all necessary works have been completed as detailed.
- Check that all apertures, openings, edges and expansion and movement control joints are completed as detailed.

New Concrete Floor

New Concrete Floor - check all aspects of preparatory works, including but not limited to:
- Check that the concrete slab has been formed and finished to the levels and falls indicated on the drawings, including any tanking or waterproofing requirements.
- New concrete floors must have aged for a minimum of 28 days, and have dried over the entire area to a relative humidity of 75% or less.

- Grind off any high spots, and using a proprietary levelling compound repair flush with feathered edges any low spots or damaged areas, then grind smooth.
- Mechanically grind or acid etch very dense concrete surfaces and any surface that is glazed to the extent that may compromise adhesion.
- Leave the surface clean, free of dust and surface contaminants.
- Check that any protruding or exposed bare metal has been treated with a suitable corrosion-inhibiting primer.

New Cement Floor Screed

New Cement Floor Screed - check all aspects of preparatory works, including but not limited to:
- New cement screeds must have aged for a minimum of 28 days, and have dried over the entire area to a relative humidity of 75% or less.
- Grind off any high spots, and using a proprietary levelling compound repair flush with feathered edges any low spots or damaged areas, then grind smooth.
- Mechanically grind or acid etch very dense concrete surfaces and any surface that is glazed to the extent that may compromise adhesion.
- Leave the surface clean, free of dust and surface contaminants.
- Check that any protruding or exposed bare metal has been treated with a suitable corrosion-inhibiting primer.

8.3.8 Installation

Floor Tiles

Floor Tiles. Install floor tiles by direct-stick method to clean, dry and properly prepared substrates in accordance with AS 3958.1 and the adhesive manufacturer's instructions. Accurately set-out and lay tiles to the layout and details shown on the drawings. Confirm the floor tile layout and pattern requirements prior to installation.

As required by the adhesive manufacturer, seal or prime porous substrates or substrates where dusting or powdering exists. The use and application of adhesive shall be exactly to the adhesive manufacturer's instructions.

All tile cutting, boring and shaping shall be carried out using appropriate tools and equipment and methods suitable for the tile type and in accordance with the tile manufacturer's recommendations. Only install cut tiles that have smooth, uniform cut edges - do not use tiles with jagged or flaked edges.

Mechanically mix powdered adhesive at the recommended ratio with clean potable water to a smooth, lump-free paste in accordance with the manufacturer's requirements. Do not mix more than can be used within the specified open time.

Apply tile adhesive evenly using a suitably notched trowel to properly prepared substrates in accordance with the manufacturer's instruction.
- Do not apply more adhesive than can be covered within the specified open time.
- Do not over spread the adhesive, and avoid surface skinning - particularly when used in

unfavourable conditions such as direct sunlight, wind and/or high temperatures.
- Ensue to follow the adhesive manufacturer's recommended setting and curing periods.

Lay floor tiles into adhesive to achieve maximum contact and bonding before skinning occurs. Re-trowel any adhesive that has skinned - do not apply water to skinned adhesive. Where necessary, back-butter tiles with adhesive to ensure maximum contact and bonding - do not spot-fix floor tiles.

Floor tiles shall be laid so that the finished surface and edges are true and even, level and/or to the falls shown on the drawings, and finished flush with adjoining finished work as appropriate or as detailed.

Tile joints shall be to the required layout, uniform, accurately aligned, straight and true to line, and set even and parallel to the specified joint width.

Where indicated on the drawings, return floor tiles along walls, upstands, toe spaces, etc., to the height and details shown on the drawings.

Remove excess adhesive from tile joints as each tile is laid to ensure full depth grouting can be achieved, and leave the tile surface completely clean.

Wall Tiles

Wall Tiles: Install wall tiles by direct-stick method to clean, dry and properly prepared substrates in accordance with AS 3958.1 and the adhesive manufacturer's instructions. Accurately set-out and lay tiles to the layout and details shown on the drawings. Confirm the wall tile layout and pattern requirements prior to installation.

As required by the adhesive manufacturer, seal or prime porous substrates or substrates where dusting or powdering exists. The use and application of adhesive shall be exactly to the adhesive manufacturer's instructions.

All tile cutting, boring and shaping shall be carried out using appropriate tools and equipment and methods suitable for the tile type and in accordance with the tile manufacturer's recommendations. Only install cut tiles that have smooth, uniform cut edges - do not use tiles with jagged or flaked edges.

Mechanically mix powdered adhesive at the recommended ratio with clean potable water to a smooth, lump-free paste in accordance with the manufacturer's requirements. Do not mix more than can be used within the specified open time.

Apply tile adhesive evenly using a suitably notched trowel to properly prepared substrates in accordance with the manufacturer's instruction.
- Do not apply more adhesive than can be covered within the specified open time.
- Do not over spread the adhesive, and avoid surface skinning - particularly when used in unfavourable conditions such as direct sunlight, wind and/or high temperatures.
- Ensue to follow the adhesive manufacturer's recommended setting and curing periods.

Press wall tiles into adhesive to achieve maximum contact and bonding before skinning occurs. Re-trowel any adhesive that has skinned - do not apply water to skinned adhesive. Where necessary, back-butter tiles with adhesive to ensure maximum contact and bonding - do not spot-fix wall tiles.

Wall tiles shall be installed so that the finished surface and edges are true and even, level, and finished flush with adjoining work as appropriate or as detailed.

Tile joints shall be to the required layout, uniform, accurately aligned, straight and true to line, level and plumb, and set even and parallel to the specified joint width. Use proprietary tile spacers, sized for the specified joint width, to ensure accurate jointing.

Form internal and external wall corner junctions true and plumb and with tile joints continued around corners level and true.

Remove excess adhesive from tile joints as each tile is laid to ensure full depth grouting can be achieved, and leave the tile surface completely clean.

Edge Trim

Edge Trim. As required and indicated on the drawings, install all necessary tiling edge trim - including edge cappings, corner mouldings, transition strips, etc., - all neatly finished, accurately aligned and true, to the required layout and as detailed on the drawings.

Grouting

Grouting. Grouting shall be in accordance with the grout manufacturer's requirements and recommendations. Coloured grout shall be to the colour specified.

Prior to grouting, ensure that the tile adhesive has completely set, and that the tile joints are clean, dry and free from excess adhesive and any foreign material. Rake out any excess adhesive from joints to ensure a maximum, uniform grout joint is achieved. Tile spacers must be removed prior to grouting.

Mechanically mix powdered tile grout with clean water at the required ratio to a smooth, lump-free paste in accordance with the manufacturer's requirements. Do not mix more than can be used within the manufacturer's specified open time. Ensue to follow the manufacturer's recommended drying and curing periods.

Apply tile grout evenly with a rubber squeegee or grouting float, ensuring that the tile joints are completely filled and smoothed to a dense, uniform surface. Do not spread more grout than can be cleaned within the specified open time. Remove excess grout immediately. In hot or windy conditions, dampen the joints to prevent the grout from drying out too quickly.

Clean the tiles with a damp sponge when the grout joints have firmed, making sure not to wash-out the joints. Finish grout joints to a smooth, uniform effect and leave grout free of pin holes and blemishes.

Allow grout joints to dry before cleaning with a clean, dry, soft cloth, to completely remove any grout haze and residue from the surface of the tiles.

8.3.9 Completion

Check that all Tiling work has been correctly installed to the required layout, and that all tile joints, edge-trimming and other detailing is correctly finished, grouted and sealed.

Check all Tiling installations for damage, marks and defects - repair or replace as necessary. Carry out any repairs to the required standard.

Thoroughly clean tiled surfaces in accordance with the manufacturer's recommended procedures and techniques. Lightly buff where appropriate.

Leave this work complete and to the required standard, and in accordance with the associated warranty requirements.

Clean up thoroughly, and leave adjacent surfaces and finished work clean and free of damage and contamination. Remove all associated rubbish from site.

Protect the completed installation from damage, trafficable dirt and grime, and stains as necessary until hand-over as scheduled or directed.

Issue to the Owner a copy of all relevant product manufacturers' maintenance requirements, and a copy of relevant manufacturer Product Warranties and the installer/applicator Installation Warranty for the installed products and completed works.

9 PAINTING & DECORATING

9.1 Preliminary

Refer to General Conditions of Contract and the Special Conditions in this Specification as appropriate. Read this section in conjunction with all other trade sections.

9.2 Compliance

Comply with the New Zealand Building Code 1992 including all revisions and amendments, Verification Methods where appropriate, and construction principles that are embodied in the Acceptable Solutions.

9.3 Resene Interior Surfaces

9.3.1 Cementitious Surfaces

Waterborne Low Sheen
Resene One-Line Spec. No. 1i 1.4 ZS
Surface prep: Resene D83
For thin plaster - Resene Limelock D809, waterborne cure/seal
1st coat: For sound cementitious surfaces - Resene Concrete Primer D405, waterborne primer; or
For powdery surfaces - Resene Sureseal D42, solventborne sealer Self priming - Resene Zylone Sheen or Resene Zylone Sheen VOC Free D302, waterborne low sheen
2nd coat: Resene Zylone Sheen or Resene Zylone Sheen VOC Free D302, waterborne satin low sheen
3rd coat: Resene Zylone Sheen or Resene Zylone Sheen VOC Free D302, waterborne low sheen

Colour: to be confirmed
Location: to all affected areas as part of the renovation

10 PLUMBING

10.1 Preliminary

Refer to General Conditions of Contract and the Special Conditions in this Specification as appropriate. Read this section in conjunction with all other trade sections.

10.2 Compliance

Comply with the New Zealand Building Code 1992 including all revisions and amendments, Verification Methods where appropriate, and construction principles that are embodied in the Acceptable Solutions.

Comply with all relevant provisions and recommendations of:

1221:1997(AS/NZS)	Fire hose reels
1254:2010(AS/NZS)	PVC-U pipes and fittings for stormwater and surface water applications
1260:2009(AS/NZS)	PVC-U pipes and fittings for drain, waste and vent application
1477:2006(AS/NZS)	PVC pipes and fittings for pressure applications
1546.1:2008(AS/NZS)	On-site domestic wastewater treatment units - Septic tanks
1596:2014(AS/NZS)	The storage and handling of LP Gas
2032:2006(AS/NZS)	Installation of PVC pipe systems
2033:2008(AS/NZS)	Installation of polyethylene pipe systems
2492:2007(AS/NZS)	Cross-linked polyethylene (PE-X) pipes for pressure applications
2537.1:2011(AS/NZS)	Mechanical jointing fittings for use with crosslinked polyethylene (PE-X) for pressure applications - Part 1: Plastics piping systems for hot and cold water installations - Crosslinked polyethylene (PE-X) - General
2642.2:2008(AS/NZS)	Polybutylene pipe systems - Polybutylene (PB) pipe for hot and cold water applications
2712:2007(AS/NZS)	Solar and heat pump water heaters - Design and construction
3500.1:2015(AS/NZS)	Plumbing and drainage - Part 1: Water services
3500.2:2015(AS/NZS)	Plumbing and drainage - Part 2: Sanitary plumbing and drainage
3500.3:2015(AS/NZS)	Plumbing and drainage - Part 3: Stormwater drainage
3500.4:2003(AS/NZS)	Plumbing and drainage - Part 4: Heated water services
3500.5:2012(AS/NZS)	Plumbing and drainage - Part 5: Housing installations
3501:1976(NZS)	Specification for copper tubes for water, gas, and sanitation
4121:2001(NZS)	Design for access and mobility: Buildings and associated facilities
4517:2010(NZS)	Fire sprinkler systems for houses
4602:1988(NZS)	Low pressure copper thermal storage electric water heaters
4603:1985(NZS)	Installation of low pressure thermal storage electric water heaters with copper cylinders (open-vented systems)
4606.1:1989(NZS)	Storage water heaters - General requirements

4607:1989(NZS)	Installation of thermal storage electric water heaters: valve-vented systems
4613:1986(NZS)	Domestic solar water heaters
4614:1986(NZS)	Installation of domestic solar water heating systems
4617:1989(NZS)	Tempering (3-port mixing) valves
4692.1:2005(AS/NZS)	Electric water heaters - Energy consumption, performance and general requirements
4766:2006(AS/NZS)	Polyethylene storage tanks for water and chemicals
5601.1:2013(AS|NZS)	Gas installations - Part 1: General installations
7602:1977(NZS)	Specification for polyethylene pipe (Type 5) for cold water services
7643:1979(NZS)	Code of practice for the installation of unplasticized PVC pipe systems
7646:1978(NZS)	Specification for polyethylene pipes and fittings for gas reticulation
AS/NZS 3500.5:2012	Plumbing and drainage - Part 5: Housing installations
NZBC G11	Gas as an Energy Source
NZBC G12	Water Supplies
NZBC G13	Foul Water

10.3 General

Carry out all works necessary to leave the water, waste, vent and soil systems serving the sanitary fittings and the plumbing hardware shown on the drawings or specified below in correct working order complete with all ancillary systems (safetrays, floor drains, overflows, relief valves, etc.) required, and with all normal incidentals customarily installed by this trade.

Comply with the Building Code, Territorial Authority By-laws and statutory authority Regulations as appropriate. Obtain all necessary permits and consents, serve all necessary notices, arrange for all tests and pay all fees and customary charges in connection with the required works.

10.4 Workmanship

10.4.1 Co-operation

Co-operate with all other trades. Attend upon Concretor, Drainlayer and Carpenter to set out the exact positions of pipe runs before adjacent work is put in hand, and to ensure that all pipes, sleeves, fixings, flashings etc. are correctly incorporated into the structure as construction proceeds.

10.4.2 Workmanship

Adequately protect all surfaces. Any damage to fittings or surfaces made good by the appropriate trade at the Plumber's expense.

Weatherseal wherever pipes, screws, bolts or other fastenings penetrate an external surface, and particularly roofing; seal with gaskets, flashings (and overflashings if necessary) or mastic as appropriate - any damage that results from failure of such seals will be made good at the Plumber's expense.

The cutting away and checking of timbers shall be limited to such dimensions as will not prejudice the purpose for which the timber is used; observe NZS 3604 restrictions on the holing and checking of joists and beams. Chasing and checking of other materials only to approval. Install seismic restraints to storage tanks and HWCs.

Observe best local trade practice to avoid problems which arise from freezing winter conditions.

All plumbing work shall be carried out by, or under the direct control of, properly qualified tradesmen, and shall be to recognised high standards.

10.4.3 Pipework

Joints between pipes of different materials shall always be to the approval of the TA Plumbing Inspector.

Pipework set-out neatly with a minimum number of bends, and more or less parallel to and at right angles to structural elements - avoid diagonal piping.

All internal pipework shall be concealed except where otherwise is either shown or approved. Exposed pipework shall be accurately and neatly run. Arrange all pipework (and particularly traps) in a manner which will allow maximum future accessibility for repairs or maintenance. Arrange for access panels to any primary maintenance positions, and install conveniently located isolating valves for each group of fittings. Wingbacks securely and squarely fixed. Crox unions usually acceptable only at the final connection to fittings. Install white plastic flanges where pipes penetrate linings in visible locations.

Where pipes are covered with nail fixed linings and trim ensure that their positions are marked on the linings to minimise the risk of subsequent nailings penetrating the pipe. Any such damage shall be rectified immediately, with all consequential damage made good.

Set pipework out in straight runs to even gradients. Fix all pipes to the structure sufficiently to fully support and to prevent sagging or vibration. Clips and saddles shall be the same material as the pipe. Exterior pipes on stand-off brackets. Fixings to the exterior or damp locations shall all be hot dip galvanized unless otherwise noted. Sleeves for pipes or drains penetrating concrete or masonry shall be uPVC, 20mm minimum larger internal diameter than the external diameter of the pipe, finished flush with concrete or masonry, and packed and mastic sealed.

Close open ends of the systems during construction to prevent the entry of foreign matter.

10.4.4 Temperature Movement

All work shall respect in full all probable thermal movements - layouts, fixings and jointings shall be arranged to allow thermal movement without risk of prejudice to watertight conditions, or risk of damage from straining of the pipes which will generate failures.
In particular, observe best local trade practice to avoid problems arising from freezing conditions.

10.4.5 Testing

All plumbing services shall be completed in stages which will allow for proper testing under normal working pressures prior to the application of insulation, concealment or other enclosure. Testing of piped water services shall be by hydrostatic testing in accordance with AS/NZS 3500.1 and shall not show any leakage when subjected to a hydrostatic pressure of 1500kPa for a period of not less than 30 minutes. All leaks remedied and retested. On completion the whole of the plumbing services to be subjected to full operational tests in the presence of the plumbing inspector, with any defects revealed in these tests properly remedied.

10.4.6 Warranties

Warranty cards and manufacturer's guarantees for all items supplied and installed by this trade shall be correctly filled in and handed over at Practical Completion.

10.5 Materials

10.5.1 Materials

Materials shall be delivered with packaging and labeling intact. Incidentals (jointing compounds, PTFE tape, seals, washers, silfos, solvent cements, etc.) shall be completely appropriate for the application involved. The use of imperfect items or items damaged in any way is always subject to approval.

10.5.2 Alternatives

The materials and elements specified indicate the required standards for these works. Alternatives which are equal to or superior to these materials and elements may be tendered for approval.

10.5.3 Materials Separation

Separate dissimilar metals in any circumstances which could produce contact or electrolytic action by a water film, with thick plastic tape, bituminous felt or other inert material. Pipes in contact with or built into concrete or masonry shall be fully spiral wrapped in Denso tape or equal.

10.6 Systems

10.6.1 Wastes & Vents

All traps sized to AS 3500.2. Wastes and vents all uPVC. Wastes shall be to AS 3500.2 falls as a minimum. Vents shall be generally as indicated, but avoid where permissible in compliance with AS 3500.2, or shall be combined above the flood level of the fittings.

Fit bird proof domes to all vents.

10.7 Elements

10.7.1 Sanitary Fittings

Supply and fix all of the sanitary fittings as scheduled on the drawings. All fittings checked on delivery for 'perfect' condition, and all fittings plain white. Supply and fix all normal accessories that are not

usually supplied with the fitting.
The Plumber is responsible for fittings from delivery until Practical Completion of the contract.

10.7.2 Plumbing Hardware

Allow the below net sum for the supply only of selected plumbing finishing tapware. Take delivery, check for 'perfect' condition, and install exactly in accordance with the manufacturer's recommendations. Check all items for correct operation. The plumber is responsible for the hardware from delivery until Practical completion of the contract.

Net sum: $3000.00

11 DRAINLAYING

11.1 Preliminary

Refer to General Conditions of Contract and the Special Conditions in this Specification as appropriate. Read this section in conjunction with all other trade sections.

11.2 Compliance

Comply with the New Zealand Building Code 1992 including all revisions and amendments, Verification Methods where appropriate, and construction principles that are embodied in the Acceptable Solutions.

Comply with all relevant provisions and recommendations of:

1254:2010(AS/NZS)	PVC-U pipes and fittings for stormwater and surface water applications
1260:2009(AS/NZS)	PVC-U pipes and fittings for drain, waste and vent application
1546.1:2008(AS/NZS)	On-site domestic wastewater treatment units - Septic tanks
2032:2006(AS/NZS)	Installation of PVC pipe systems
3500.0:2003(AS/NZS)	Plumbing and drainage - Glossary of terms
3500.2:2015(AS/NZS)	Plumbing and drainage - Part 2: Sanitary plumbing and drainage
3500.3:2015(AS/NZS)	Plumbing and drainage - Part 3: Stormwater drainage
7643:1979(NZS)	Code of practice for the installation of unplasticized PVC pipe systems
AS/NZS 1547:2012	On-site domestic wastewater management
BS 5572	Code of practice for sanitary pipework
NZBC E1	Surface Water
NZBC G13	Foul Water

11.3 General

Carry out all required works to leave the sewer and stormwater systems shown on the drawings in correct working order complete with all normal incidentals.

Comply with Local Authority By-laws and Health Department Regulations as appropriate. Obtain all necessary permits and consents, serve all necessary notices, arrange all tests and pay all fees and customary charges in connection with the works.

11.4 Workmanship

11.4.1 General

Carry out all required works to leave the sewer and stormwater systems shown on the drawings in correct working order complete with all normal incidentals. Comply with Local Authority By-laws and Health Department Regulations as appropriate. Obtain all necessary permits and consents, serve all

necessary notices, arrange all tests and pay all fees and customary charges in connection with the works.

11.4.2 Co-operation

Cooperate with all trades and attend upon the Concretor and Plumber to set out exact pipe runs before any adjacent work is put in hand and ensure that all sleeves etc. are correctly incorporated as work proceeds.

11.4.3 Materials

All pipes and other materials shall comply with the appropriate Standards, and shall be protected from damage of any kind until installation is complete. All incidentals appropriate for the applications involved. Concrete shall be 17.5MPa and as specified under Concretor, Mortar shall be as specified in Blocklayer.

11.4.4 Workmanship

All drainlaying shall be carried out by, or under direct control of, properly qualified tradesmen, and shall be to recognised high standards. Ensure cast-in items are installed when required so that no delay is caused by this trade. Adequately protect all adjacent surfaces - clean down to remove dirt etc., and any damage shall be made good by the appropriate trade at the Drainlayer's expense.

On completion of drainlaying clean up full area affected by this trade to the condition it was in before drainlaying commenced.

Site is to be returned as close as possible to its present condition on completion of the contract.

11.4.5 Excavation

As required for sewer and stormwater. Check for other service lines before excavation - the Drainlayer is responsible for making good any damage. Trenches true to line and with even gradients between gullies, soil stack terminations or downpipes, etc.

Keep the bottom of trenches clear of loose material. All pipes shall be laid in appropriate bedding material, compacted as required. Shore trenches if required to suit ground conditions. Backfilling shall be by this trade, to the standards required in Siteworks.

11.5 Foul Water Drainage

11.5.1 Scope

Supply, install, test and commission new, gravity-flow foul water drains on the site, to the locations, layout and details shown on the drawings, complete with all necessary components and accessories required for satisfactory completion and performance of the foul water drainage system. All aspects of this works shall comply with the requirements of the NZ Building Code, related compliance Standards, Regulations and Acts, and to the requirements of the Territorial Authority, and as specified herein and on the approved drawings and schedules. Ancillary work and/or services not specifically mentioned but necessary to complete the work to specified levels of performance shall be deemed included.

Install foul water drains in natural ground, beneath and external to the building, for the distances indicated on the drawings. Allow for all ventilation requirements, inspection openings, bends, branches, manholes, inspection chambers, overflow gully traps, etc., as required and indicated on the drawings. Unless shown otherwise, the foul water drains shall be connected to the building's sanitary drainage system, and discharge to the foul water network.

The foul water drainage plans are diagrammatic only. Allow for all necessary vents, inspection fittings, cleaning eyes, traps and venting in accordance with AS/NZS 3500.2 and to comply with the New Zealand Building Code, and as required by the Territorial Authority. Refer to the drawings for the dimensioned locations of sanitary waste pipes and outlets.

The following is a list and a general description of the extent of Foul Water Drainage works, which are more specifically defined in the contract documents, required for the completion of the contract works:

Drainlayer to make a site visit to become familiar with the site and what is required.

allow to liase with the plumber to solve the new drainage requirements.

11.5.2 Requirements

Safety
Comply with the Health and Safety at Work Act 2015 (HSWA), and with all relevant Health and Safety at Work Regulations 2016, and with all relevant WorkSafe New Zealand (WorkSafe) Approved Codes of Practice and WorkSafe Information and Guidance, in particular the 'OSH Guidelines For the Provision of Facilities and General Safety in the Construction Industry', and the 'Excavation Safety - Good Practice Guidelines'

Carry out all construction operations in accordance with the Contractor's project-specific Health and Safety Plan.

Compliance
Obtain all necessary permits and consents, serve all necessary notices, arrange all tests and pay all fees and customary charges in connection with the foul water drainage works.

The Drain Layer shall be deemed to have allowed for all work associated with the safe and orderly execution of the foul water drainage work, including complying with all Territorial Authority requirements, Building Consent, Building Act, Health and Safety requirements, and all other acts, laws, by-laws and regulations that may affect the execution of the work.

Inspections
Inspections of foul water drainage works shall take place at each of the stages as scheduled in the Building Consent. Confirm a written programme to facilitate these inspections, including notification when each stage of the work is ready for inspection.

Obtain and pay all fees for any required inspections which are additional to the Building Consent.

Testing

Carry out all necessary testing of the foul water drainage installations, and demonstrate to the Contract Administrator and the controlling Territorial Authority that the installations are watertight and comply with the requirements of the New Zealand Building Code, related compliance Standards, and the design documents.

Redundant Drains

Where an existing foul water drain or part thereof is no longer required, it shall be disconnected from the service at the junction of the live drain or at the property boundary, and be appropriately sealed-off watertight in accordance with AS/NZS 3500.2. Advise the controlling Territorial Authority of the final sealing treatment.

Co-operation

Co-operate with other trades to ensure that all preliminary and preparatory works are completed to specification and as shown on the drawings.

Coordinate with other trades as necessary to install foul water drains to the required locations and layouts.

Workmanship

Foul water drainage work shall be carried out by qualified and experienced tradespersons, familiar with the required installation requirements, under the direct supervision of a NZ certified Registered Drainlayer, in accordance with AS/NZS 3500.2 in compliance with the New Zealand Building Code, and all local codes and regulatory authority requirements, and the conditions of the Building Consent.

All pipe cutting, jointing, and supporting techniques shall be exactly as recommended by the pipe manufacturer. Pipes, fittings and accessories shall be handled and installed in such a manner that prevents any damage to the component.

All work shall be such as to leave a neat, efficient, robust and watertight installation.

Carry out all necessary inspections and tests during installation to ensure compliance with the design specifications and regulatory requirements. Provide test result sheets to the Contract Administrator to show compliance has been achieved.

Take all necessary measures during installation to protect the foul water drainage system from damage, and to prevent the entry of:

- extraneous water;
- soil, sand, or rock,
- the contents of any septic tank; or
- any other substance, the discharge or which could impede the operation of the foul water drainage network.

Ensure that any installed drain is adequately protected from any damage and excessive loading during the remaining construction period.

Protect adjacent finished work and surfaces from damage and contamination during installation. Any damage to fittings or finished surfaces shall be made good by the appropriate trade at the Drain Layer's expense.

Any associated electrical wiring and prescribed electrical work (by others) shall be carried out by a qualified electrician in accordance with the electrical standards and regulations and the Electrical specification.

Defective Materials & Work

Should defective materials and/or work be found at any time before the final acceptance of the work, it shall be rejected. All rejected foul water drainage materials and work shall be repaired and/or replaced to the satisfaction of the Contract Administrator, without delay and at no additional expense to the Principal.

Delivery & Handling

Store foul water drain pipes and accessories undercover, out of direct sunlight, clear of the ground, on an even surface, and protected from damage and contamination in accordance with the manufacturer's requirements. Keep pipes and accessories out of direct sunlight and protected from damage and contamination at all times.

Where possible, store pre-packed PVC pipes in the original delivery crate.
Store loose PVC pipes on evenly spaced bearers at maximum 1.0m centres, with pipe sockets alternated so the the sockets do not bear on each other, and with side supports if pipes are stacked more than two layers high. When loose PVC pipes are stacked in a pyramid, the maximum stack height shall be 1.0m and the bottom pipes shall be chocked.

Do not used damaged or faulty materials or products, or products that are beyond their designated shelf life. Do not use PVC materials that have been exposed to or stored in direct sunlight longer than the period specified by the manufacturer.

Handle all products and materials in accordance with the manufacturer's requirements, and in a manner that prevents damage or deterioration of the material/product.

Installers shall be familiar with and comply with manufacturer's Material Safety Data Sheet precautions for use, and use appropriate safety gear when handling materials.

Conform with all relevant WorkSafe NZ Guidelines and Codes of Practice - in particular the 'OSH Guidelines For the Provision of Facilities and General Safety in the Construction Industry' and the 'Excavation Safety - Good Practice Guidelines'.

As-Built Drawings

On completion and before application for Code Compliance Certificate, prepare As-Built Drawings of the foul water drainage system, that accurately record the new and/or modified foul water drainage installation.

Information shall include, but not limited to, type, class and size of all pipes, the location, grade and direction of flow of all pipes, the location of all bends, changes in direction, cleaning access positions, manholes, and all dimensions, levels, inverts, etc.

Submit prepared as-built drawings to the Contract Administrator for review. Issue as-built drawings in accordance with the Contract Administrator's instruction, and in the required format.

Warranties
On completion and before Practical Completion, provide all relevant manufacturer/supplier warranties in favour of the Principal, covering materials, equipment, proprietary products, etc., supplied and installed.

11.5.3 Materials

General
Supply and deliver to the site all pipes, fittings, precast manholes, granular bedding material and other materials required for incorporation in the drainlaying work. All drainlaying materials shall be fit for purpose and intended use, new, of good quality and free from defects, and as specified herein and on the approved drawings and schedules.

PVC-U Pipes & Fittings
PVC-U foul water drain pipes and fittings for non-pressure applications shall comply with AS/NZS 1260: 'PVC-U pipes and fittings for drain, waste and vent application'. Installed in accordance with AS/NZS 3500.2, and AS/NZS 2032 or AS/NZS 2566.2.

Pipe Classification:
Class SN4-SN6 - Rubber Ring Joint or Solvent Welded Joint. For domestic and residential applications, and low load areas.
Class SN8-SN10 - Rubber Ring Joint or Solvent Welded Joint. For commercial and industrial applications, and medium load areas.
Class SN16 - Rubber Ring Joint or Solvent Welded Joint. For heavy traffic load areas.

Gullies
Gully traps shall be of an approved type and installed in accordance with AS/NZS 3500.2 and the requirements of the Territorial Authority.

Gully traps shall be PVC construction, including dish and lid.

The overflow level of gully dishes shall be set no less than 25mm above paved surfaces, and no less than 100mm above unpaved surfaces.

Provide adequate support to gully riser and dish with compacted bedding or concrete.

Where subject to damage, protect gully traps with a smooth-finished concrete surround, or with 2:1 sand/cement mortar, surrounding the entire gully and separated from the building foundation, in accordance with AS/NZS 3500.2 and as shown on the drawings.

Insitu Concrete

Cast insitu concrete used for foul water drainage installation shall be 20 MPa Normal Concrete complying with NZS 3104. Where specified, used as bedding, capping and surround concrete, and for any cast-insitu concrete elements (to NZS 3104 unless specified otherwise).

Reinforcing Steel

Steel reinforcing materials for cast-insitu concrete elements shall comply with AS/NZS 4671. Unless specified otherwise on the drawings, bars shall be Grade 300 deformed.

Bedding & Surround Material

Except where specified otherwise on the drawings, bedding (underlay, side support, overlay) material shall be compacted clean granular non-cohesive material - crushed rock or gravel screenings - of nominal particle size range of 7-10mm with a maximum particle size of 20mm, that is free from organic material and clay, and have a moisture content appropriate to the degree of compaction required. If the bedding material is contaminated or an excessive amount of oversized particles are present, the bedding material shall be rejected and not used.

Marking Tape

Marking tape shall be located just above the top of the pipe embedment zone, and centred over the pipe.

Non-Detectable Marking Tape:

- Non-detectable marking tape shall comply with AS/NZS 2648.1.
- Tape width shall be 100mm minimum.
- Height of message letters shall be 40mm minimum.

Detectable Marking Tape:

- Detectable marking tape shall comply with AS/NZS 2648.1.
- Tape width shall be 100mm minimum.
- Tracer wire shall be stainless steel grade 316 or copper alloy designation 122.
- Tracer wire shall allow at least 25% elongation of the plastic tape before breakage of the wire.
- Height of message letters shall be 40mm minimum.

11.5.4 Testing

Foul Water Drains

Test the foul water drainage installation, including all drains, connections and system components, for water tightness in accordance with the requirements of the Territorial Authority (TA).

Where required by the Territorial Authority, the testing shall be undertaken in the presence of a representative of the TA. Demonstrate to the Contract Administrator and the Territorial Authority that the installation complies with the requirements of the contract documents, related standards and regulatory bodies. Lodge all certificates of approval with the Contract Administrator.

Unless specified otherwise by the Territorial Authority, the test method shall be the Water Test procedure for non-pressure pipelines as defined in AS/NZS 2302. Where appropriate, the procedures

in NZBC E1/VM1 may be used as an alternative. The acceptability of other test methods are be subject to the approval of the Territorial Authority and the Contract Administrator.

Provide all necessary plant, equipment and instruments required for the specified testing procedure. All testing and commissioning shall be undertaken by suitably skilled and experienced technicians.

Pressure testing shall be carried out after the pipes have been laid and the bedding material has been placed over the pipes as specified.

Prior to testing ensure that all pipe junctions and inspection eyes are exposed, and pipelines have been flushed and all residual debris cleaned out.

Foul water manholes shall be tested for watertightness by plugging all pipes and filling with water. After absorption has taken place the water level shall remain constant for thirty minutes.

Test results shall be recorded clearly on properly formatted Test Result sheets, and submitted to the Contract Administrator within 48 hours of completion of testing.

Repair or replace any materials or workmanship found to be defective or faulty during testing, and repeat the test until a satisfactory test result is achieved.

Leave the installation watertight and free of defects, and operating to the required performance standard.

The work shall be deemed incomplete unless all required testing and commissioning has been carried out and has passed the requirements of the testing specification and the Territorial Authority.

Water Test Procedure - to AS/NZS 2302

Water test procedure of foul water drains (non-pressure) - to AS/NZS 2302: Section 7.3.2.

- The pipeline shall be filled with water to a height of not less than 1m above the natural ground level at the highest point of the section being tested, or to the flood level of the lowest sanitary fixture, but not exceeding 5m at the lowest point of the test section.
- The pressure shall be maintained without leakage for at least 15 minutes.
- The source of any leaks shall then be ascertained and any defects repaired.
- The pipeline shall then be retested.

Note: Testing should not be carried out if groundwater is present above the pipeline. If groundwater is present, the test pressure should be increased to compensate for the depth of groundwater at a rate of 10 kPa for every 1m of groundwater depth.

11.5.5 Backfilling

Backfilling

Trenches shall be backfilled as soon as possible after the laying, inspecting and testing of the pipeline.

Where required, lay marker tape along the length of the drain, just above the top of the pipe embedment zone, before backfilling.

Trench backfill materials shall be placed over the pipe embedment, and compacted to restore the trench as near as practicable to the normal surrounding ground surface level and reduce the likelihood of subsidence. Backfill material shall be placed in uncompacted layers not exceed 300mm, then mechanically compacted to the required density.

Temporary trench support systems shall be lifted progressively above each layer of backfill to ensure each layer is compacted against undisturbed ground.

Any deficiencies of trench filling exposed by settlement shall be corrected to the required standard.

11.5.6 Reinstatement of Surfaces

Reinstatement of Surfaces
Refer to separate specification section - Siteworks - Reinstatement of Surfaces.

Ground and paved surfaces above excavated foul water drainage trenches shall be reinstated to the standard specified. Reinstatement shall generally achieve a standard equal to or better than the pre-existing situation - in no case will a lower standard be accepted.

Hedges, fences and other features to be retained that have been damaged or removed during the work shall be reinstated to the satisfaction of the Contract Administrator.

11.6 Stormwater Drainage

11.6.1 Scope

The following is a list and a general description of the extent of Stormwater Drainage works, which are more specifically defined in the contract documents, required for the completion of the contract works:

Supply, install, test and commission new, gravity-flow stormwater drains on the site, to the locations, layout and details shown on the drawings, complete with all necessary components and accessories required for the satisfactory completion and performance of the stormwater system. All aspects of this works shall comply with the requirements of the NZ Building Code, related compliance Standards, Regulations and Acts, and to the requirements of the Territorial Authority, and as specified herein and on the design drawings and schedules. Ancillary work and/or services not specifically mentioned but necessary to complete the installation shall be deemed included.

Install stormwater drains in natural ground, beneath and/or external to the building, for the distances indicated on the drawings. Allow for all inspection openings, bends, branches, manholes, inspection chambers, etc., as required and indicated on the drawings. Unless shown otherwise on the drawings, the stormwater drains shall be connected to the roof and surface stormwater installations, and discharge to the stormwater network.

The stormwater drainage plans are diagrammatic only. Allow for all necessary inspection fittings, cleaning eyes, and traps in accordance with AS/NZS 3500.3 and to comply with the New Zealand Building Code, and as required by the Territorial Authority. Refer to the drawings for the

dimensioned locations of roof drainage system rainwater pipes and outlets, and surface drainage outlets, etc.

11.6.2 Requirements

Safety

Comply with the Health and Safety at Work Act 2015 (HSWA), and with all relevant Health and Safety at Work Regulations 2016, and with all relevant WorkSafe New Zealand (WorkSafe) Approved Codes of Practice and WorkSafe Information and Guidance, in particular the 'OSH Guidelines For the Provision of Facilities and General Safety in the Construction Industry', and the 'Excavation Safety - Good Practice Guidelines'

Carry out all construction operations in accordance with the Contractor's project-specific Health and Safety Plan.

Compliance

Obtain all necessary permits and consents, serve all necessary notices, arrange all tests and pay all fees and customary charges in connection with the stormwater drainage works.

The Drain Layer shall be deemed to have allowed for all work associated with the safe and orderly execution of the stormwater drainage work, including complying with all Territorial Authority requirements, Building Consent, Building Act, Health and Safety requirements, and all other acts, laws, by-laws and regulations that may affect the execution of the work.

Workmanship

Stormwater drainage work shall be carried out by qualified and experienced tradespersons, familiar with all required installation requirements, under the direct supervision of a NZ certified Registered Drain Layer, in accordance with AS/NZS 3500.3 and to comply with the New Zealand Building Code, and all local codes and regulatory authority requirements, and the conditions of the Building Consent.

All pipe cutting, jointing, and supporting techniques shall be exactly as recommended by the pipe manufacturer. Pipes, fittings and accessories shall be handled and installed in such a manner that prevents any damage to the component.

All work shall be such as to leave a neat, efficient, robust and watertight installation.

Carry out all necessary inspections and tests during installation to ensure compliance with the design specifications and regulatory requirements. Provide test result sheets to the Contract Administrator to show compliance has been achieved.

Take all necessary precautions during installation to protect the stormwater drainage system from damage, and to prevent the entry of:

- soil, sand, or rock;
- sewage, including the contents of any septic tank, or trade waste; or
- any other substance that could damage or impede the operation of the stormwater drainage network.

Ensure that any installed drain is adequately protected from any damage and excessive loading during the remaining construction period.

Protect adjacent finished work and surfaces from damage and contamination during installation. Any damage to fittings or finished surfaces shall be made good by the appropriate trade at the Drain Layer's expense.

Any associated electrical wiring and prescribed electrical work (by others) shall be carried out by a qualified electrician in accordance with the electrical standards and regulations and the Electrical specification.

Defective Materials & Work

Should defective materials and/or work be found at any time before the final acceptance of the work, it shall be rejected. All rejected stormwater drainage materials and work shall be repaired and/or replaced to the satisfaction of the Contract Administrator, without delay and at no additional expense to the Principal.

Delivery & Handling

Store stormwater drain pipes and accessories undercover, out of direct sunlight, clear of the ground, on an even surface, and protected from damage and contamination in accordance with the manufacturer's requirements. Keep pipes and accessories out of direct sunlight and protected from damage and contamination at all times.

Store loose PVC-U pipes on evenly spaced bearers at maximum 1.0m centres, with pipe sockets alternated so the the sockets do not bear on each other, and with side supports if pipes are stacked more than two layers high. When loose PVC-U pipes are stacked in a pyramid, the maximum stack height shall be 1.0m and the bottom pipes shall be chocked.

Do not used damaged or faulty materials or products, or products that are beyond their designated shelf life. Do not use PVC-U materials that have been exposed to or stored in direct sunlight longer than the period specified by the manufacturer.

Handle all products and materials in accordance with the manufacturer's requirements, and in a manner that prevents damage or deterioration of the material/product.

Installers shall be familiar with and comply with manufacturer's Material Safety Data Sheet precautions for use, and use appropriate safety gear when handling materials.

Conform with all relevant WorkSafe NZ Guidelines and Codes of Practice - in particular the 'OSH Guidelines For the Provision of Facilities and General Safety in the Construction Industry' and the 'Excavation Safety - Good Practice Guidelines'.

As-Built Drawings

On completion and before application for Code Compliance Certificate, prepare As-Built Drawings of the stormwater drainage system, that accurately record the new and/or modified stormwater drainage installation.

Information shall include, but not limited to, type, class and size of all pipes, the location, grade and direction of flow of all pipes, the location of all bends, changes in direction, cleaning access positions, manholes, and all dimensions, levels, inverts, etc.

Submit prepared as-built drawings to the Contract Administrator for review. Issue as-built drawings in accordance with the Contract Administrator's instruction, and in the required format.

11.6.3 Materials

Backfill Material

Except where specified otherwise, backfill material above the pipe embedment layer (150mm above the top of pipe) shall be selected ordinary excavated material that is free from any builder's waste, any organic material, any rocks or hard matter larger than 20mm, and any soil lumps larger than 75mm.

Except where specified otherwise, pipes beneath private roadways and where subject to vehicular traffic - all backfill from the top of the embedment layer (150mm above top of pipe) to the underside of the pavement layer shall be GAP 65 - General All Passing 65mm.

Mechanically compact backfill material in layers not exceeding 300mm to a relative compaction no less than 95% of the NZ Standard Compaction.

Trenches in public footpaths and roads shall be backfilled in accordance with the requirements of the controlling authority.

Bedding & Surround Material

Except where specified otherwise, bedding (underlay, side support, overlay) material for PVC-U pipes shall be GAP 7 - General All Passing 7mm - clean, granular, non-cohesive crushed rock or gravel screenings, that is free from organic material and clay, with a moisture content appropriate to the degree of compaction required. If the bedding material is contaminated or an excessive amount of oversized particles are present, the bedding material shall be rejected and not used.

PVC-U Pipes & Fittings

PVC-U stormwater drain pipes and fittings for non-pressure applications shall comply with AS/NZS 1254: 'PVC-U pipes and fittings for stormwater and surface water applications'. Installed in accordance with AS/NZS 3500.3 and AS/NZS 2032 or AS/NZS 2566.2

Pipe Classification:
Class SN4-SN6 - Rubber Ring Joint or Solvent Welded Joint. For domestic and residential applications, and low load areas.
Class SN8-SN10 - Rubber Ring Joint or Solvent Welded Joint. For commercial and industrial applications, and medium load areas.
Class SN16 - Rubber Ring Joint or Solvent Welded Joint. For heavy traffic load areas.

General

Supply and deliver to the site all pipes, junctions, precast manholes, granular bedding material and other materials required for the satisfactory completion of the stormwater drainage works. All drainlaying materials shall be fit for purpose, new and free from damage and defects.

RECEIVED
27 OCT 2017
BY:

30042

Form 2A

Memorandum from licensed building practitioner: Certificate of design work

Section 45 and Section 30C, Building Act 2004

Please fill in the form as fully and correctly as possible.

If there is insufficient room on the form for requested details, please continue on another sheet and attach the additional sheet(s) to this form.

THE BUILDING

Street address:	40 Titoki Road		
Suburb:	Waikanae Beach		
Town/City	Kapiti Coast	Postcode:	5032

THE OWNER

Name(s):	Carl & Sonya Dowle		
Mailing address:	as above		
Suburb:		PO Box/Private Bag:	
Town/City:	Waikanae	Postcode:	5036
Phone number:	0276589979	Email address:	carlsdowle@gmail.com

BASIS FOR PROVIDING THIS MEMORANDUM

I am providing this memorandum in my role as the: Please tick the option that applies (√)	
( )	**sole** designer of all of the RBW design outlined in this memorandum – I carried out all of the RBW design myself – no other person will be providing any additional memoranda for the project
( )	**lead** designer who carried out some of the RBW design myself but also supervised other designers – this memorandum covers their RBW design work as well as mine, and no other person will be providing any additional memoranda for the project
(✓)	**lead** designer for all but specific elements of RBW – this memorandum only covers the RBW design work that I carried out or supervised and the other designers will provide their own memoranda relating to their specific RBW design
( )	**specialist** designer who carried out specific elements of RBW design work as outlined in this memorandum – other designers will be providing a memorandum covering the remaining RBW design work

IDENTIFICATION OF DESIGN WORK THAT IS RESTRICTED BUILDING WORK (RBW)

I Darren Hunter carried out / supervised the following design work that is restricted building work

PRIMARY STRUCTURE: B1

Design work that is restricted building work	Description	Carried out/ supervised	Reference to plans and specifications
Tick(√)if included *Cross (X) if excluded*	*[If appropriate, provide details of the restricted building work]*	*[Specify whether you carried out this design work or supervised someone else carrying*	*[If appropriate, specify references]*

		out this design work]		

Primary structure

All RBW Design work relating to B1	(✓)	NZS3604 portions of the design	( ) Carried out ( ) Supervised	
Foundations and subfloor framing	( )		( ) Carried out ( ) Supervised	
Walls	(✓)	new non load bearing walls	(✓) Carried out (✓) Supervised	
Roof	(✓)	new plywood framed zinc clad roofs	(✓) Carried out (✓) Supervised	
Columns and beams	(✓)	LVL members to roof area	( ) Carried out (✓) Supervised	
Bracing	(✓)	addressed altered wall	(✓) Carried out ( ) Supervised	
Other	( )	See engineers certificate	( ) Carried out ( ) Supervised	

EXTERNAL MOISTURE MANAGEMENT SYSTEMS: E2

All RBW design work relating to E2	(✓)	cavity system to cedar	( ) Carried out (✓) Supervised	
Damp proofing	(✓)	separation layer	( ) Carried out (✓) Supervised	
Roof cladding or roof cladding system	(✓)	Zinc cladding	( ) Carried out (✓) Supervised	
Ventilation system (for example, subfloor or cavity)	( )		( ) Carried out ( ) Supervised	
Wall cladding or wall cladding system	(✓)	cedar on cavity Zinc weather screen	( ) Carried out (✓) Supervised	
Waterproofing	(✓)	shower area - floor	( ) Carried out (✓) Supervised	
Other	( )		( ) Carried out ( ) Supervised	

FIRE SAFETY SYSTEMS: C1 – C6

Emergency warning systems, evacuation and fire service operation systems, suppression or control systems, or	(N/A)		( ) Carried out ( ) Supervised	

other			

Note: The design of fire safety systems is only restricted building work when it involves small-to-medium apartment buildings as defined by the Building (Definition of Restricted Building Work) Order 2011.

Note: continue on another page if necessary.

WAIVERS AND MODIFICATIONS

Waivers or modifications of the building code are required ( ) Yes ( ) No

If Yes, provide details of the waivers or modifications below:

Clause	**Waiver/modification required**
[List relevant clause numbers of building code]	*[Specify nature of waiver or modification of building code]*

Note: continue on another page if necessary.

ISSUED BY

Name: Darren Hunter	LBP or Registration number: LBP Design 2 115270
The practitioner is a: (✓) Design LBP 115270 ( ) Registered architect ( ) Chartered professional engineer	
Design Entity or Company (optional): Hunter Architecture Ltd	
Mailing address (if different from below): 3 Seaview Rd	
Street address / Registered office: 3 Seaview Rd	
Suburb: Paraparaumu Beach	Town/City: Kapiti Coast
PO Box/Private Bag:	Postcode: 5032
Phone number: 04 904 9288	Mobile: 021 413 999
After Hours:	Fax: nil
Email address: darren@hunterarchitecture.co.nz	Website:

DECLARATION

I Darren Hunter [*name of practitioner*], LBP, 115270 state that I have applied the skill and care reasonably required of a competent design professional in carrying out or supervising the Restricted Building Work (RBW) described in this form, and that based on this, I also state that the RBW:

- Complies with the building code; or
- Complies with the building code subject to any waiver or modification of the building code recorded on this form.

Signature:

Date: 10/10/17

COMPUTER FREEHOLD REGISTER
UNDER LAND TRANSFER ACT 1952

Historical Search Copy

R.W. Muir
Registrar-General
of Land

Identifier	**345892**
Land Registration District	**Wellington**
Date Issued	09 May 2008

Prior References
WN24C/839

Estate	Fee Simple
Area	3603 square metres more or less
Legal Description	Lot 3 Deposited Plan 386409

Original Proprietors
Jeffrey Alan McNamara and Angela Frances McNamara

Interests

Subject to a right (in gross) to drain sewage over part marked I and K on DP 386409 in favour of The Kapiti Coast District Council created by Transfer 575944.2 - 16.8.1983

The easements created by Transfer 575944.2 are subject to Section 309 (1) (a) Local Government Act 1974

7810059.5 Consent Notice pursuant to Section 221 Resource Management Act 1991 - 9.5.2008 at 9:00 am

SUBJECT TO SECTION 243(C) RESOURCE MANAGEMENT ACT 1991 (AFFECTS ROW D DP 386409)

Subject to a right (in gross) to drain sewage over part marked H, and a right to drain stormwater over part marked M,K and L, all on DP 386409 in favour of Kapiti Coast District Council created by Easement Instrument 7810059.9 - 9.5.2008 at 9:00 am

The easements created by Easement Instrument 7810059.9 are subject to Section 243 (a) Resource Management Act 1991

Land Covenant in Easement Instrument 7810059.11 - 9.5.2008 at 9:00 am

Land Covenant in Easement Instrument 7810059.12 - 9.5.2008 at 9:00 am

Subject to a right to drain sewage over part marked H on DP 386409 created by Easement Instrument 7810059.13 - 9.5.2008 at 9:00 am

Appurtenant hereto is a right to convey water, electricity and telecommunications and a right to drain stormwater created by Easement Instrument 7810059.13 - 9.5.2008 at 9:00 am

The easements created by Easement Instrument 7810059.13 are subject to Section 243 (a) Resource Management Act 1991

8227637.1 Transfer to Barrington John Prince - 30.7.2009 at 10:59 am

Appurtenant hereto is a right of way created by Easement Instrument 8780350.1 - 9.9.2011 at 1:08 pm

The easements created by Easement Instrument 8780350.1 are subject to Section 243 (a) Resource Management Act 1991

The compulsory easement condition under Section 243 (c) Resource Management Act 1991 on DP 386409 has now been satisfied

10524554.2 Mortgage to Mortgage Holding Trust Company Limited - 9.9.2016 at 12:48 pm

10599965.1 Discharge of Mortgage 10524554.2 - 2.12.2016 at 2:01 pm

10599965.2 Transfer to Carl Stewart Dowle and Sonja Margaret Dowle - 2.12.2016 at 2:01 pm

J0044

CHECKSHEET: SINGLE RESIDENTIAL DWELLING AND ACCESSORY BUILDING

Including single stand-alone dwellings, dwelling additions and/or alterations, re-piling, garages, decks, gazebos, sheds, retaining walls etc.

RECEIVED
27 OCT 2017
BY

Kāpiti Coast DISTRICT COUNCIL
He Huri Whakamuri, Ka Titiro Whakamua

Kapiti Coast District Council,
175 Rimu Road, Paraparaumu 5032
Private Bag 60601, Paraparaumu 5254
For enquiries, phone 04 296 4700 or 0800 486 486

Address of Project: 40 Titoki road.

This checksheet shows you the information that has to be supplied with your building consent application. Please attach **2 copies** of the following information (unless otherwise specified) with your completed Building Consent Application Form.

Please tick relevant box in the Customer Use column as you attach the information. If the box is not relevant to your application, write NA across the box. Please check each section carefully and complete those sections that are relevant to your project.

Once you have attached all the required information, please check for completeness as an incomplete application or lack of any supporting information **will mean that your application cannot be accepted for processing.**

An Application Form is attached to this checksheet — Please include this checksheet with your application.

Customer Use	1	GENERAL Complete this section for all applications	For Office Use Only
☑	a	**Building Consent Application Form (1 copy)** Completed and signed by the owner or by an agent on behalf of the owner	☑
☐ ☐	b	**Proof of Ownership (1 copy)** One recent copy of current certificates/s of title (not older than 3 months) **AND** where applicable one copy of purchase agreement (if recently purchased) or one copy of relevant portions of current lease.	☐ ☐
☑	c	**Locality Plan (1:500) showing:** Physical location of the subject building in relation to streets or landmarks, north point, name of building and lot and DP number.	☑
☑	d	**Restricted Building Work** Does the application involved restricted building work? ☑ Yes ☐ No If Yes, provide certificate(s) of design work and advise Council of your Licensed Building Practitioner(s)	☑
☐	e	**Inspections and Monitoring** Details of proposed inspection regime including monitoring by council officers and other professionals e.g. architects, engineers, surveyors and certification to be supplied on completion.	☐
☑	f	**Site Plan (1:100) showing:** Dimensions of all boundaries, north point, finished floor levels, site area, street name and number, lot and DP number, outline of building, distance to boundaries and the position of swimming or spa pools, ground contours (extended to boundaries) and/or levels and designated wind zone of the site (e.g. specific design, very high, high, medium or low). In addition, if a site is identified as being subject to flooding, ponding, on an overflow path, river or stream corridor, or other natural hazards, indicate on plans proposed design will mitigate natural or created hazards. Additional information is available on these sites by request from Kapiti Coast District Council. **GIS is checked**	☑ ☐
☑	g	**Application Fee** Applications will not be accepted without payment of the appropriate fees. Fees payable are set out in the published fee schedule of the council that has jurisdiction over the project site.	☐

For Office Use Only: Building Consent Officer: Application Accepted? ☑ Yes ☐ No

Give reason: ☐ Sufficient information is supplied with application or
☐ Other

Name: John Peterson	Date: 27/10/17	Signature:

2		**CHANGE OF USE** Complete for all existing buildings where the proposal involves forming a household unit where one did not exist before Example: the conversion of a garage or shed into a residential unit	
N/A	a	**Assessment of the Building for Compliance with the Building Code** Section 115(a) of the Building Act 2004 requires that the building, in its new use, complies fully with all clauses of the Building Code.	☐
☐	b	**Reasonably Practicable** The above assessment must relate to all building code clauses. If the proposal is for the project to meet anything less than full compliance with any clauses, your application must clearly state your reasoning, with supporting documentation, and show how you will meet the highest level of compliance that can be considered reasonably practicable.	☐
3		**FOUNDATIONS / FLOOR** Complete for all new buildings, for existing buildings where the footprint of the building will change or where an additional storey is being added	
☑	a	**Foundation Plan (1:100 / 1:50) showing:** • Dimensions of all new foundations • Sub-floor, including bracing • Footing details • If a concrete slab, show basic details including reinforcing and contractions joints • Piles and footing • If the addition is an upper storey show details on upgrading existing foundations, joints, piles etc • Indicate ventilation to sub floor spaces	☑
☒	b	**Subfloor Bracing** Provide subfloor bracing plan and calculations for all piled structures. Where the structure is specifically engineered, this should be included with the structural calculations. Subfloor bracing plan and calculations are required where an additional storey is to be added	☐
4		**CONSTRUCTION** Complete for all new structures or alterations to existing structures	
☑	a	**Existing Floor Plan (1:100 / 1:50) showing:** (For additions and alterations only) • Complete layout of all levels of building • All designated spaces • All removals • Sanitary fixtures • Smoke detectors	☑
☑	b	**Proposed Floor Plans (1:100 / 1:50) showing:** • Complete layout of all levels of building • Room dimensions • Location of partitions • All designated spaces • All floors (new or altered) • Location of sanitary fixtures • Stairs, barriers, handrails, floor joists and beams • Floor joist layout for each level with timber floors • Smoke detectors • Note where wall will form part of the swimming pool fence	☑
☒	c	**Pre-nail Truss and Frames** • Specific design wall framing requires clarification • Truss layout must be supported by design certification and design of fixing details, including consideration of load paths to ground • Lintels carrying point loads, such as from girder trusses, require specific engineering design	☐

☑	d	**Wall Bracing Plan (1:100 / 1:50) showing:** • Bracing details and calculations for wall bracing (also required for existing lower storeys where an additional storey is being added) • Sub-floor bracing for decks projecting more than 2m from the house • Location, type and number of bracing elements to indicate compliance with NZS 3604:2011 (include calculations) • If the bracing was specifically designed by a structural engineer, provide calculations (required for specific design wind zones and lateral distribution of upper floor loads where lower storey bracing is provided in walls beyond the upper storey footprint)	☑
☑	e	**Sections and Details (1:50 / 1:20 / 1:10) showing:** • Foundation details involving reinforcing and connections • Stairs, handrails, decks and decking • Insulation systems and materials to floors, walls and roof • Barriers providing safety from falling. Specific engineering design required where detail does not comply with NZBC B1/AS2 • Framing sizes, beams, lintels • Roof cladding, eaves, fascias, gutters • Flashings to openings • Fire rated systems on all walls – closer than 1 metre to boundary • Stud heights of rooms and total height from lowest ground floor level to top of ridge • Window and door installation details • Retaining wall details e.g. type, height of retained ground, relationship to boundary, waterproof membrane and proposed drainage	☑
☒	f	**Fire Report** For domestic dwellings of 4 storeys or more, or buildings providing more than one household unit	☐
	5	**EXTERNAL** Complete for new buildings or existing buildings with alternations to the external shell	
☑	a	**Elevations (1:100 / 1:50) showing:** Accurate lines from boundary to boundary on each elevation, relevant District Plan daylight control lines, the maximum height on each elevation, location of door and window openings, fixed and opening sashes, sill heights, floor levels in relation to ground levels, exterior cladding nominated to all elevations, down pipes and spouting, ventilators to sub-floor area (suspended floors only)	☑
☑	b	**Risk Assessment** *(Risk matrix in E2/AS1 may be used for buildings within scope)* Consider exposure, design and detailing to support appropriate selection of cladding	☑
☑	c	**Cladding Details (1:50 / 1:20 / 1:10)** Provide details around all penetrations, joinery and other junctions at a level appropriate to the level of risk e.g. roof/wall, balcony/wall, junction of different types of cladding, back flashing details for cavity systems	☑
☐	d	**Production Certification** Supply copies of product certificates relied on as compliance documents	☐
☑ Zinc roof	e	**Alternative Solutions** If the proposal uses products or systems that are not covered in the Acceptable Solutions of clause E2 of the Building Code provide supporting current information including test results (fully signed reports), case studies, expert opinion (including evidence of experience/qualification, basis for forming opinion and statement of independence) etc to demonstrate compliance	☑
	6	**SERVICES** Complete for all projects with new installations or alteration of plumbing or drainage services	
☑	a	**Plumbing and Drainage Plan 1:100 / 1:50) showing:** *Note: if you have supplied drainage details for surface water disposal on the site plan, no drainage plan is required.* • Sizes of pipe work and drains • Fixtures and fittings, hot water system(s) • If the building is more than one storey with sanitary fittings on upper floors, provide an isometric layout showing wastes, pipes and falls • Drainage layout with inspection bends and junctions indicated for both sewer and stormwater • Any other drainage on site including council mains and retaining wall field drains • Ventilation of sanitary rooms • Calculations for sizing of down pipes • Gully traps including overflow relief gullies	☑

7		**STRUCTURAL** Complete for all projects incorporating specific structural design	
☑	a	**Structural Calculations** If any design work required the services of a structural engineer, attach 2 copies of the calculations with this. The calculations must be prefaced with information explaining the design philosophy and justification of assumptions and methodologies used in analysis	☑
☐	b	**Expert Opinion (Producer Statements)** If this application for consent relies on any expert opinion including Producer Statements certifying compliance with the New Zealand Building Code, a copy must be attached with this application. (Note all structural Producer Statements are required to have accompanying calculations.)	☐
8		**SPECIFICATIONS** Complete for all applications *Note: the specification must be specific to the project and cover all aspects of the proposed work*	
☑	a	**Specification: General** • Elements of structure (size, spacing, timber treatment) • Finish or fixings to meet durability requirements • Plumbing and drainage materials and design that installation is to comply with • Wet area surfaces • Ventilation systems • Flooring slip resistance for access routes • Glazing • Type of smoke detectors (including existing smoke detectors where they will remain)	☑
☑	b	**External Claddings** For each of the following claddings provide details of the product name, manufacturer, maintenance requirements and warranties offered • Building wraps • Wall claddings • Roof claddings • Membranes (roof and decks) • Tanking • Joinery	☑
9		**DEMOLITION / REMOVAL** Complete for all projects involving demolition of significant parts of buildings or the demolition or removal of whole buildings	
☒	a	**Means of Barricading the Site** Provide details of temporary barriers, gates which swing inwards or other means of restricting public access to the area	☐
☒	b	**Proposed Tipping Location for Demolition Materials (address/landfill)**	☐
☒	c	**Hazardous Building Material** Provide safety plan detailing the safe handling and disposal of hazardous materials	☐
☒	d	**Site Management Plan Covering** Management to control silt runoff, noise and dust	☐
☒	e	**Proposed Destination for Relocate Building**	☐
☒	f	**Access To and From the Site (including use of kerb crossings)**	☐
☒	g	**Specify Termination of Existing Services** • Water • Sewer • Stormwater	☐
☒	h	**Details About the Building such as:** Number of storeys, type of materials the building is constructed (Photographs of the building would be useful)	☐

		Note: You will need to contact the relevant service authorities specified below to advise them of the extent of your work: • electricity, • gas, • drainage, • water, • transport, • telecommunications, • cable television, or • any other services that may be affected. **Transportation of Relocated Building** You will be required to contact and provide details to Councils Transportation and Traffic Department.	
10		**OTHER APPROVALS** Please check Territorial Authority regarding the requirement for other approvals required and fees payable	
		These may include:	
☐		• Consents under the Resource Management Act	☐
☐		• Approvals under bylaws including earthworks, vehicle crossings, road openings and water connections.	☐
☐		• Show the location of swimming or spa pools on the property and describe how compliance with the Fencing of Swimming Pools Act will be achieved.	☐

Attached
The following documents are attached to the application:
☐ Plans and specifications
☐ Memoranda from Licensed Building Practitioners who carried out or supervised any design work that is restricted building work
☐ Project information memorandum
☐ Certificate attached to project information memorandum
☐ Proof of ownership
☐ Waivers and/or modifications supporting documentation

The issue of a building consent does not relieve the owner of any duty or responsibility under any other Act.

Kāpiti Coast
DISTRICT COUNCIL

Statement of Compliance with the NZ Building Code

Consent No: 170827

ISSUED BY: **Kapiti Coast District Council**

PROJECT

Site Address:	40 Titoki Road, Waikanae
Legal Description:	LOT 3 DP 386409 C/T 345892
Work Description:	New entrance & canopy roof, new ensuite & walk-in robe, new covered deck & doors to living area.
Building Category:	R1

OWNER

Name(s): Carl & Sonja Dowle
Address: 40 Titoki Road,Waikanae

[P] Application for CCC received and accepted
[P] Consent description accurate and reflects amendments (if relevant).
[P] Confirm owner named on Building Consent application is current owner
[P] Confirm new owner details and evidence of ownership are correctly documented
[NA] Confirm all required inspections completed and documented in GoGet
[NA] If inspection(s) have been missed, have they been compensated for?
[NA] If supervision was required for any inspection - did it occur?
[P] Work in accordance with approved consent and approved amendments
[NA] Have any notices to fix been uplifted?
[P] Supporting documentation required in building consent addenda received
[P] Quality assurance documentation
[P] Restricted building work
[P] Additional information required and received
[NA] Compliance schedule issued
[NA] Earthquake prone building
[NA] Swimming Pool details updated
[NA] Warnings and Bans
[P] Approve to issue Code Compliance Certificate if all fees paid
[NA] Approve to issue Certificate for Public Use if all fees paid
[NA] Approve to issue Certificate of Acceptance if all fees paid
[NA] Supervision review

NOTES:
Inspections Prepaid: 9
Inspections Done: 11

LICENSED BUILDING PRACTITIONERS:
Designer 1 BP115270 Building practitioner number: BP115270.
Phone number: 021413999.
Email address: darren@hunterarchitecture.co.nz

Websitehttp://www.redshed.co.nz
Location: Paraparaumu Beach, 5032.
Company Involvement: Hunter Design Studio Ltd

Designer 2	CPENG56179	Peter Bolton

Registrant Number: 56179
Practice Fields: Geotechnical, Structural.
Chartered Professional Engineer.
Date of registration: 01 Aug 2007.
Registration Status: Current.

International Professional Engineers.
Date of registration: 01 Aug 2007.
Registration Status: Current

Carpentry 1	BP106341	To be supplied at 1st inspection.
Roofing 1	BP125102	

On review of the documentation and inspection notes it can be considered on reasonable grounds that all work has been completed in compliance with the building consent.

Signed:
Name: Alan Tinney
Position: Building Officer

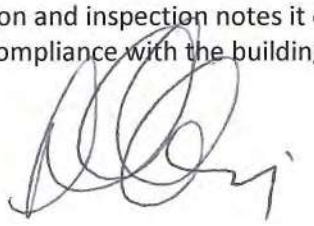

Date: 22 March 2019

Kāpiti Coast
DISTRICT COUNCIL
Me Huri Whakamuri, Ka Titiro Whakamua

23 November 2017

Hunter Architecture Ltd
3 Seaview Road
Paraparaumu Beach 5032

Dear Building Consent Applicant/Building Owner

Request for Further Information – Building Consent: 170827

Site Address: **40 Titoki Road, Waikanae**
Legal Description: **LOT 3 DP 386409 C/T 345892**
Project Description: **New entrance & canopy roof, new ensuite & walk-in robe, new covered deck & doors to living area.**

Following checking of your Building Consent it is apparent that further information is required.

Information needed:

BUILDING

1. PS1 issued refers to driven timber piles. Calculations and drawings supplied SS2 do not identify driven piles. Provide revised plans and calculations or PS1 to reflect work as designed in documents provided demonstrating compliance with B1.2

2. CM2 noted on PS1, provide list of inspections CPEng engineer is to carry out and supply record of work with PS4 prior to Code Compliance Certificate being issued.

3. Demonstrate compliance with B2.3.1 (a) to concrete strength to exposure zone D.

4. Provide specifications or identify wall underlay demonstrating compliance with E2/AS1, clause 9.1.7.

5. Demonstrate compliance with E2.3.3 to the proposed drainage channel length. (Refer E2/AS1, clause 7.3.2.1)

6. Provide specifications for the the proposed RAB board identified to Zinc cladding system.

7. Provide manufacturers specifications for proposed modified plaster system to existing brick veneer cladding, demonstrating compliance with E2.3.2.

8. Provide falls to shower detail 35, sheet A24 demonstrating compliance with E3.2

175 Rimu Road, Paraparaumu 5032 | Private Bag 60 601, Paraparaumu 5254 | T: 04 296 4700 F: 04 296 4830 | www.kapiticoast.govt.nz

9. CPEng registered engineer LBP memorandum supplied does not identify work carried out or supervised.

   Provide Restricted Building Work Memorandum identifying work carried out/supervised as required under the Building Act 2004, Section 45

We have suspended your application pending receipt of the above information. Please send it to us by 7 December 2017. We are unable to issue your Building Consent until these matters are resolved.

Information can be posted, emailed to Building.Approvals@kapiticoast.govt.nz or dropped in at one of Council's service centres.

If you need more time, have any questions or you would like to discuss this matter, please contact Mike Dymond on MikeD@nationalprocessing.co.nz or 021 550 187 486 referencing Building Consent No 170827.

Yours sincerely

Mike Dymond

cc Building Owner

Printed on 30 October 2017

Department	✓ For Referral	Comments	Approving Officer / Date
Resource Consents (refer PIM Sheet)	✓		
Plumbing and Drainage BC2	✓		
Building BC2	✓	Process review 13/12/17.	Mike Dymond 11/12/17
Fire Design BC8			
Compliance Schedule BC2 & BI6			
Environmental Health			
Reviews required BC2 and BC5			
NOTES:			

APPLICATION WORKFLOW COVERSHEET (Blue Folder)

Kāpiti Coast DISTRICT COUNCIL
Me Huri Whakamuri, Ka Titiro Whakamua

Building Consent No.	170827
Building Project	New entrance canopy roof, new ensuite & walk in robe, New covered deck & doors to living area
Location (Site Address)	40 Titoki Rd, Waikanae
Building Category	Circle appropriate category (R1) R2 R3 C1 C2 C3

Received: RECEIVED 27 OCT 2017 BY:

Note: A signature confirms that the application contains sufficient information to enable compliance with the building code to be assessed.

	Name	Date
Vetted and formally received **BC1**	John Peterson	27/10/17
Payment taken and receipted by CSO **BC1**		
Data entered and invoiced by CSO **BC1**	Angie	31/10/17
Documentation prepared/scanned	Angie	31/10/17.
Plan production and invoicing **BC3**		
Building Consent signed **BC1**	Simon Copp	20/12/17
BC, Approved plans and appropriate paperwork sent to applicant or agent with receipt by CSO **BC3**	Angie	20/12/17
Inspection envelope prepared by CSO with endorsed plans and other appropriate paperwork and filed to cabinet. **BC3**	Angie	20/12/17.

CONSENT DATA INPUT REQUIREMENTS

Please circle

Yes	(No)	Compliance Schedule	
(Yes)	No	Restricted building work	
Yes	(No)	Owner Builder	Owner Builder register: ED2526609
Yes	(No)	Certificate for Public Use	

Dialogue Record

List further information requested, info received, records / reference of communication etc.
via Phone / Email / letter / counter / fax

Date / time	State content of discussion!!!	Initials

Legend	
N/A ☐	Not Applicable to this application. (The deletion of whole sections as N/A is permitted. For alternatives comment below each section).

No ☐	Plans, specifications & documentation not complying with the Building Code &/or Bld Act (The reason specified alongside each prompt.)
Yes ☐	Plans, specifications & documentation complying with Category Bld Code &/or Bld Act (The reason specified alongside each prompt.)

Site Information *(NZS 3604 Sec 3.4, 4, 5 Code clB1, B2, E1, E2, F1 & F2 Sect. 72, 75 BA04)*

N/A	No	Yes	Comments
☐	☐	☑	Wind zone High V/ High Specific (GIS) Site specific (3604)
☐	☐	☑	Flooding / ponding hazards (GIS) Ponding GWRC.
☑	☐	☐	Slippage / fault line hazards (GIS)
☑	☐	☐	Erosion, river & coastal hazards (GIS)
☑	☐	☐	Subsidence / soft soil hazards (Site inspection notes)
☐	☐	☑	Corrosion zone Zone D or Zone C GS.
☑	☐	☐	Soil contamination (F1 GIS)
☑	☐	☐	Distances to boundaries / siting shown (District plan) Pan. 1550
☑	☐	☐	Floor levels / contours (E2/AS1 & NZS 3604 E1)
☑	☐	☐	Two or More Allotments (Sec 75 – 83 Bld Act)
☑	☐	☐	Noise / sound insulation (airport & highway)
☑	☐	☐	CT/221 notice reviewed
☑	☐	☐	Outstanding Building Consents, No CCC
			BC:
			BC:
Additional comments:			

Documents selected for building packet

1 – 31
42 – 47

Notes

Kāpiti Coast
DISTRICT COUNCIL
Me Huri Whakamuri, Ka Titiro Whakamua

Hunter Architecture Ltd
3 Seaview Road
Paraparaumu Beach 5032

20 December 2017

Dear Building Consent Applicant / Building Owner

Approval of Building Consent – Detached Residential / Outbuilding: 170827

Location: 40 Titoki Road, Waikanae
Legal Description: LOT 3 DP 386409 C/T 345892
Description: New entrance & canopy roof, new ensuite & walk-in robe, new covered deck & doors to living area.

I am pleased to inform you that the above building consent application has been approved. The building consent documents have been issued and are enclosed.

The building consent attached to this letter is consent under the Building Act 2004 to undertake building work in accordance with the plans and specifications that accompanied your application. Under section 49 of that Act, Council is satisfied that the provisions of the building code would be met if the proposed building work were completed in accordance with those plans and specifications. This consent does not affect any duty or responsibility under any other Act or permit any breach of any other Act.

This building consent does not give or imply any rights to transgress beyond your legal boundaries. Any work that is required beyond your legal boundaries can only be undertaken with the permission of the affected owner/s.

Before starting any work please read ALL the building consent documents carefully and in full so that you, as the owner, understand the conditions under which the consent has been issued.

Please note that this building consent includes restricted building work, the details of this are included in this letter.

Owner responsibilities

The owner is responsible for ensuring:

- building work starts within 12 months of the approval of the building consent and that work progresses at a reasonable pace.
- written notice of every licensed building practitioner undertaking restricted building work is provided to Council before that work commences, and any changes are advised in writing

175 Rimu Road, Paraparaumu 5032 | Private Bag 60 601, Paraparaumu 5254 | T: 04 296 4700 F: 04 296 4830 | www.kapiticoast.govt.nz

- the approved building consent documents are kept on site during construction and available for the District inspector at inspections

- all required inspections are completed and that a Code Compliance Certificate is obtained once the work has been completed. The list of supporting documentation required before issue of the Code Compliance Certificate and information on filling out the application form for code compliance certificate is attached. Failure to obtain a final inspection and a code compliance certificate may affect your insurance cover and could affect future re-sale of your property.

- no work with noisy equipment is to be carried out before 7.30 a.m. or after 6 p.m. Monday to Saturday. During the week there may be workers on site from 6.30 a.m. quietly preparing for work. Work with noisy equipment is not permitted on Sundays and public holidays.

- all loose materials that are capable of being carried by the wind are either secured or removed from the site. All activities must be carried out in a manner that keeps to a minimum the dust nuisance to adjacent properties.

- no damage occurs to public property, for example footpaths or retaining structures. Should damage occur you will be required to pay for any repairs.

- obtaining an amendment to the building consent for any changes to the approved building consent, prior to that work being undertaken.

- meeting the requirements of any easements, consent notices, covenants, and like listings registered on the title.

- the development contributions invoiced, if any, must be paid before a code compliance certificate can be issued.

General requirements

Note: Your attention is drawn to the notes contained in the 'Addendum to the Consent' and guidance documents referred to.

The following information is relevant to this building consent:

1. The Building Inspector is to be given 24 hours' notice before carrying out the inspections on the attached list. To arrange for inspections by the District Inspector, please contact the building inspectorate on 04 296 4700 between the hours of 8.00am and 4.30pm.
2. Refer to the list of inspections required. Under section 90 of the Building Act 2004 agents authorised by the Council (acting as a Building Consent Authority) are entitled, at all times during normal working hours or while building work is being done, to inspect–
   a. land on which building work is being or is proposed to be carried out; and
   b. building work that has been or is being carried out on or off that building site; and
   c. any building.
3. You are responsible for the safety of visitors to the work site including those undertaking building inspections. You must provide safe access to parts of the construction necessary for inspection. Ladder access must be securely founded and tied. Scaffold access and roof edge protection is generally required.

4. If required inspections, including those by designers of specifically designed elements, are not undertaken you may experience difficulty in obtaining a Code Compliance Certificate for the project. We suggest that at the time of the first inspection you discuss the inspection requirements with the inspecting officer.
5. This building consent will lapse and be of no effect if the building work concerned has not been commenced within 12 calendar months after the date of issue, or within such further period as the territorial authority allows.
6. The contractor is to leave the site clear of all demolition materials and in a tidy state.
7. Easements, consent notices, covenants, and like listings registered on the title are the responsibility of the applicant.
8. Note and comply with endorsements on approved plans.

Restricted Building Work

The following building work associated with this building consent is restricted building work [Section 7 and 402(1)(n) of the Building Act 2004 and Building (Definition of Restricted Building Work) Order 2011]:

Description of restricted building work including design work that is restricted building work
Primary structure
Foundations and subfloor framing
Walls
Roof
Columns and beams
Bracing
Other
External moisture management systems
Damp proofing
Roof cladding or roof cladding system
Ventilation system (for example subfloor or cavity)
Wall cladding or wall cladding system
Waterproofing
Other

Please note that the design work and restricted building work must be supervised or carried out by a licensed building practitioner who is licensed to carry out or supervise that kind of building work.

You or your agent will need to provide their details to the Council in writing prior to commencement of the building work. If after the restricted building work commences the named licensed building practitioner(s) ceases to be engaged to carry out or supervise the restricted building work under the building consent, this must also be advised in writing as must also the details of any other licensed building practitioner(s) subsequently engaged to carry out or supervise the restricted building work (Section 87 of the Building Act 2004). A form "Advice of licensed building practitioner(s)" is enclosed for you to use to advise the Council of licensed building practitioner details.

Please also note that it is an offence to engage another person to carry out or supervise restricted building work who is not a licensed building practitioner (Section 86 of the Building Act 2004).

Other reference material

- Guide for completing an application for code compliance, http://www.kapiticoast.govt.nz/globalassets/regulatory/building/form-278a-guide-for-ccc-application.pdf
- A guide to the inspection process http://www.kapiticoast.govt.nz/globalassets/regulatory/building/form_559_a_guide_to_the_inspection_process.pdf

If you have any questions regarding your building consent or your responsibilities, please contact Kapiti Coast District Council on 04 296 4700 or toll free on 0800 486 486.

Relevant Information

Issued in accordance with Building Consent No. 170827

1. Any external cladding system must be completed before a pre-lining inspection for the affected wall can take place.
2. The Building Act 2004 does not specifically name Producer Statements, but it does require that a suitably qualified person verify the design or construction complies with the Building Code. Guidance on the use of producer statements is available at https://ipenzproduction.blob.core.windows.net/cms-library/do cs/default-source/news-publication/engineering-practice/prod ucer-statement-guidance-sheet.pdf?sfvrsn=2
3. The owner/builder is responsible for clearly defining the site boundary lines and pegs. This may require a survey. NOTE: established fences are not necessarily on the boundary.
4. Plan notes take precedence over general specifications.
5. Both hot and cold water pipes are to be tested to 1500kPa pressure.

Building Consent

[Form 5, Building (Forms) Regulations 2004]

170827

Section 51, Building Act 2004

The building

Street address of building:	40 Titoki Road, Waikanae
Legal description of land where building is located:	LOT 3 DP 386409 C/T 345892
Valuation number:	1491017001
Building name:	N/A
Location of building within site/ block number:	Central position in large site
Level/unit number:	

The owner

Name of owner:	Carl & Sonja Dowle
Contact person:	As above
Mailing address:	40 Titoki Road, Waikanae 5036
Street address/registered office:	N/A
Phone numbers:	

Landline:	-	*Mobile:*	027 458 9979
After hours:	-	*Fax number:*	-

Email address: carlsdowle@gmail.com

Website:

First point of contact for communications with the council/building consent authority:

Full Name: Hunter Architecture Ltd

Mailing Address: 3 Seaview Road, Paraparaumu Beach 5032

Phones: 04 904 9288: 021 413 999: 04 904 9288

Email: darren@hunterarchitecture.co.nz

Building work

The following building work is authorised by this building consent:

New entrance & canopy roof, new ensuite & walk-in robe, new covered deck & doors to living area.

Residential Dwelling

This building consent is issued under section 51 of the Building Act 2004. This building consent does not relieve the owner of the building (or proposed building) of any duty or responsibility under any other Act relating to or affecting the building (or proposed building). This building consent also does not permit the construction, alteration, demolition, or removal of the building (or proposed building) if that construction, alteration, demolition, or removal would be in breach of any other Act.

Conditions of building consent

This building consent is subject to the following conditions:

1. There are no conditions.

Compliance schedule

A compliance schedule is not required for the building.

Attachments

Copies of the following documents are attached to this building consent:

- List of required inspections and supporting documentation required
- Building Consent Addendum
- Plans and specifications
- Advice of licensed building practitioners

Note: The cover letter and all attachments to this building consent should be read fully to ensure you understand all conditions of this consent.

Signature

Building Offr

Position

On behalf of: KAPITI COAST DISTRICT COUNCIL

Date: 11/12/17

Building Consent Addendum to 170827

Application	Building Consent No. 170827
Hunter Architecture Ltd 3 Seaview Road Paraparaumu Beach 5032	

Project	
Description:	Dwellings - Alterations & additions Being Stage 1 of an intended 1 Stages New entrance & canopy roof, new ensuite & walk-in robe, new covered deck & doors to living area.
Intended Life:	Indefinite, but not less than 50 years
Intended Use:	Residential Dwelling
Estimated Value:	$170,000
Location:	40 Titoki Road, Waikanae
Legal Description:	LOT 3 DP 386409 C/T 345892
Valuation No:	1491017001

Designer:	Hunter Architecture Ltd 3 Seaview Road, Paraparaumu Beach : 021 413 999 / 904 9288
Contractor:	Base Consulting Ltd 279 Oxford Street, Levin : 027 444 080

Specific requirements

1. Names and registration numbers of the plumber and drainlayer are required before work commences.
2. A certifying plumber/drainlayer is to complete the attached producer statement forms and return to Council. Also provide a neat 'as built' drainage plan showing sewer, stormwate and water.

Consent No: 170827 **Building Category: R1**

Site Address: 40 Titoki Road, Waikanae

Owner/Agent: Hunter Architecture Ltd

Inspections

The following inspections are required:

1 Foundations
1 Drainage
1 Preline Building
1 Postline / Wet area Pre Application
1 Pre Wrap
1 Pre Clad
1 Cavity System
1 Wet Area Pre-application
1 Preline Plumbing
1 Final Inspection
10 Total Inspections

Support Documentation

Application for CCC
Electrical safety certificate
As-built drainage plan
Plumbing (Form 125) for pressure test and installation piped services
Texture coating certificates
Membrane applicator certificates - cladding
Membrane applicator certificates - internal wet area
Record of Work
Roof installers warranty
Wall cladding/texture coating installation applicator warranty

Licensed Building Practitioners

Designer 1	Building practitioner number: BP115270. Phone number: 021413999. Email address: darren@hunterarchitecture.co.nz Websitehttp://www.redshed.co.nz Location: Paraparaumu Beach, 5032. Company Involvement: Hunter Design Studio Ltd
Designer 2	Peter Bolton Registrant Number: 56179 Practice Fields: Geotechnical, Structural. Chartered Professional Engineer. Date of registration: 01 Aug 2007. Registration Status: Current.

	International Professional Engineers. Date of registration: 01 Aug 2007. Registration Status: Current
Carpentry 1	To be supplied at 1st inspection.
Foundations 1	To be supplied at 1st inspection.
External Plastering 2	To be supplied at 1st inspection.
Roofing 1	To be supplied at 1st inspection.

PLANNING PROCESSING CHECKSHEET

Building Consent Number: BC 170827

Kāpiti Coast DISTRICT COUNCIL
Me Huri Whakamuri, Ka Titiro Whakamua

Property Information				
Property Address:	40 Titoki Rd, Waikanae			
Legal Description:				
Planning Zone:				
Building Project:	New covered deck + new entrance & canopy			
	Yes	No	Action Required	
Certificate of Title	✓			
Easements	✓			
Section 221	✓		Include copy	

District Plan Items to Check				
	Yes	No	Action Required	
Heritage Register		✓		
Eco-site/Native Veg		✓	Check PDP tree list	
Flood Hazards	✓		Ponding	
Min Floor Level	✓		RBL = 4.1m	
Coastal B.L.R.		✓		D1 - 31
Relocatable / No build		✓		
Other Hazards		✓		
EQ Faults		✓		
Airport Zones		✓		
	Complies?		Action Required	
Yards	✓		Neighbours Approval??	D1 – 30
HIRB	✓			D1 – 19
Site Coverage	✓			
Max Height	✓			D1 – 19
Permeable Surface	✓		30%	
Accessory Buildings <60m²	/		Max height 4.5m	
Earthworks	/			D1 – 16
Water Tank / Siting	/			
Parking X 2 per dwelling	/			
Family flat < 50²	/			D1 - 17
Existing Resource consent	/		RM	
Resource consent required	/		Apply Section 37 and advise Plan Vetting Team	
~~Boundary Activity~~				
Type				
Application forms sent			Apply Section 37 and advise Plan Vetting Team	
Temporary / Marginal				

Building Consent Number: BC 170827

Other Provisions				
	Yes	No	Action required	
Retaining Walls				
Outdoor Court 40m²			4m minimum	D1 - 24
Noise Corridor			Acoustic Certificate required	D1 - 22
HVT lines separation				D1 – 31/32
Designations				
Does the building straddle Title/crosslease boundary			Section 77 required	
Separation of buildings				D1 – 32
Separation from water body				D1 – 32
Overflow paths				D1 – 18
Flood erosion area				D1 – 33
Flood hazards (buildings)				D1 – 18
~~Waikanae North~~				D10 - 1
Resource consent application			RM	
Yards				D10 - 6
Insulation				
Solar Panels			2m2	
Design Certificate				
~~DIF Required?~~				
Calculate DIF Fees			**USE CALCULATOR SHEET,** print and attach	Amount
Send DIF letter out			Date sent	

Additional Comments

Decision: *(tick item which applies)*

☑ Application complies with District Plan requirements

☐ Application does not comply with District Plan – BC to be issued subject to s37

Officers Name:	**Officers Signature:**	**Date:**
	J. Burke	2.11.17.

COMPUTER FREEHOLD REGISTER
UNDER LAND TRANSFER ACT 1952

Historical Search Copy

R.W. Muir
Registrar-General
of Land

Identifier	**345892**
Land Registration District	**Wellington**
Date Issued	09 May 2008

Prior References
WN24C/839

Estate	Fee Simple
Area	3603 square metres more or less
Legal Description	Lot 3 Deposited Plan 386409

Original Proprietors
Jeffrey Alan McNamara and Angela Frances McNamara

Interests

Subject to a right (in gross) to drain sewage over part marked I and K on DP 386409 in favour of The Kapiti Coast District Council created by Transfer 575944.2 - 16.8.1983

The easements created by Transfer 575944.2 are subject to Section 309 (1) (a) Local Government Act 1974

7810059.5 Consent Notice pursuant to Section 221 Resource Management Act 1991 - 9.5.2008 at 9:00 am

SUBJECT TO SECTION 243(C) RESOURCE MANAGEMENT ACT 1991 (AFFECTS ROW D DP 386409)

Subject to a right (in gross) to drain sewage over part marked H, and a right to drain stormwater over part marked M,K and L, all on DP 386409 in favour of Kapiti Coast District Council created by Easement Instrument 7810059.9 - 9.5.2008 at 9:00 am

The easements created by Easement Instrument 7810059.9 are subject to Section 243 (a) Resource Management Act 1991

Land Covenant in Easement Instrument 7810059.11 - 9.5.2008 at 9:00 am

Land Covenant in Easement Instrument 7810059.12 - 9.5.2008 at 9:00 am

Subject to a right to drain sewage over part marked H on DP 386409 created by Easement Instrument 7810059.13 - 9.5.2008 at 9:00 am

Appurtenant hereto is a right to convey water, electricity and telecommunications and a right to drain stormwater created by Easement Instrument 7810059.13 - 9.5.2008 at 9:00 am

The easements created by Easement Instrument 7810059.13 are subject to Section 243 (a) Resource Management Act 1991

8227637.1 Transfer to Barrington John Prince - 30.7.2009 at 10:59 am

Appurtenant hereto is a right of way created by Easement Instrument 8780350.1 - 9.9.2011 at 1:08 pm

The easements created by Easement Instrument 8780350.1 are subject to Section 243 (a) Resource Management Act 1991

The compulsory easement condition under Section 243 (c) Resource Management Act 1991 on DP 386409 has now been satisfied

10524554.2 Mortgage to Mortgage Holding Trust Company Limited - 9.9.2016 at 12:48 pm

10599965.1 Discharge of Mortgage 10524554.2 - 2.12.2016 at 2:01 pm

10599965.2 Transfer to Carl Stewart Dowle and Sonja Margaret Dowle - 2.12.2016 at 2:01 pm

Kāpiti Coast DISTRICT COUNCIL
Mē Huri Whakamuri, Kā Titiro Whakamua

26 March 2019

Hunter Architecture Ltd
3 Seaview Road
Paraparaumu Beach 5032

Building Consent: 170827

Dear Sir/Madam

Fees required before issue of Code Compliance Certificate

Description: New entrance & canopy roof, new ensuite & walk-in robe, new covered deck & doors to living area.
Location: 40 Titoki Road, Waikanae
Legal Description: LOT 3 DP 386409 C/T 345892

We have just completed a final inspection of the building with respect to the above building consent.

An audit of the fees paid at the time the consent was applied for shows that the amount for building inspections is insufficient to cover the inspections that were carried out
Before we can issue the Code Compliance Certificate for this project, the fees summarised below **must be paid**.

Additional inspections fees to date due 2 inspections at $114.00

Total fee outstanding to date & 228.00

Please contact me if you would like to discuss this matter.

Yours sincerely

Leanna Hutchinson
Customer Services Officer

Author/generator ID data

GoGet Inspection Audit Report

Consent No: **170827**

Applicant: **Hunter Architecture Ltd**

Site Address: **40 Titoki Road, Waikanae**

Work Type: **New entrance & canopy roof, new ensuite & walk-in robe, new covered deck & doors to living area.**

Inspection Type: **Brick Veneer**

Inspection Outcome: **Fail**

Inspected By: **John Peterson**

Inspection Date: **27 August 2018 1:48 p.m.**

Duration: **45 minutes**

Inspection Element	Status
General	Fail
Min/max cavity achieved	Pass
Sighted the altered window wall sections, sill bars, flashing tapes, flexi-flashings prior to re-instating the bricks.	
Brick tie fixings	N/A
Washouts	N/A
Weep holes	N/A
Mortar strength	N/A
Mortar bedding	N/A
Flashings	Fail
The wall section above the porch slider - Photos are to be available to view noting the cavity system installation process	
Brick tie durability	N/A
Building wrap	Pass
Under window vents	N/A
Rebate	Pass
existing	
Veneer overhang	N/A
Brick tie spacing	N/A
Head lintels	N/A
Control joints	N/A
LBP number	Fail
Advice of the Blocklayers LBP is required	
builder BP106341	
Other	N/A



north
Taken at 11:41 AM on Monday 27/08/2018



east
Taken at 11:42 AM on Monday 27/08/2018



underside of porch roof
Taken at 11:44 AM on Monday 27/08/2018

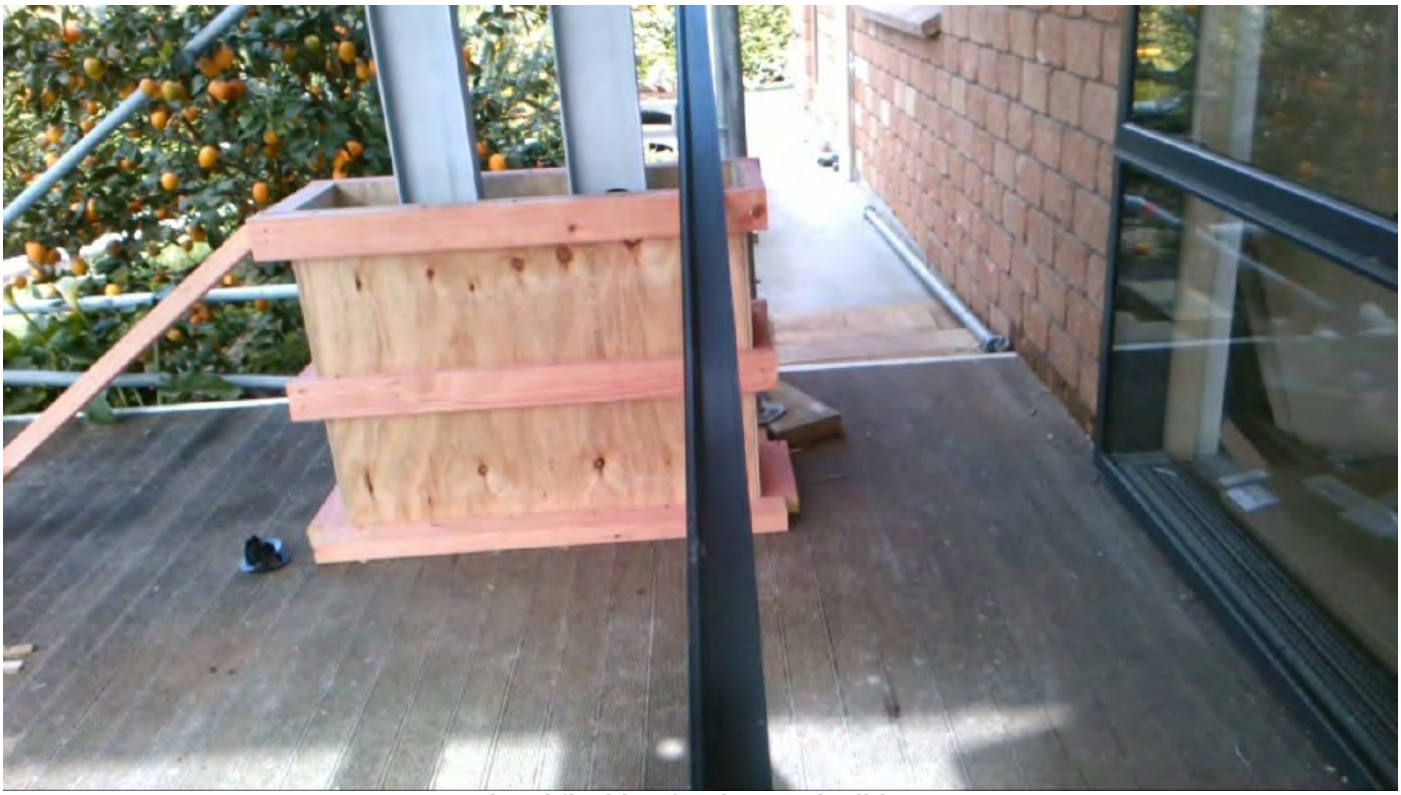

head flashing for the porch slider
Taken at 11:44 AM on Monday 27/08/2018



Porch - east
Taken at 11:44 AM on Monday 27/08/2018



Taken at 11:45 AM on Monday 27/08/2018