Sharalyn Fraser
Agency

Statement of passing over information – This information has been supplied by the Vendor or the vendor's agents. Accordingly, Sharalyn Fraser Agency (Ownly Limited licensed (REA 2008) is merely passing over the information as supplied to us by the vendor or vendors agents. We cannot guarantee its accuracy and reliability as we have not checked, audited, or reviewed the information and all intended purchasers are advised to conduct their own due diligence investigation into the same. To the maximum extent permitted by law Sharalyn Fraser Agency (Ownly Limited licensed (REA 2008) does not accept any responsibility to any person for the accuracy of the information herein

KAPITI COAST DISTRICT COUNCIL

CODE COMPLIANCE CERTIFICATE

SECTION 95, BUILDING ACT 2004

THE OWNER

Property Trading Limited C/- 12 Tongariro Street PARAPARAUMU	No. Issue date	040086 5/09/05

THE BUILDING

Street Address	5 KOROMIKO GLEN, WAIKANAE
Valuation No.	1494143504
Legal Description	
Year Constructed	
Current Use	
Proposal	New dwelling.

Code Compliance

The building consent authority named below is satisfied, on reasonable grounds, that –

a) The building work complies with the building consent; and

b) The property owner must follow and carry out the manufacturers prescribed maintenance procedures.

Signed for and on behalf of the Kapiti Coast District Council:

Name: _____ **Date:** 6/9/2005

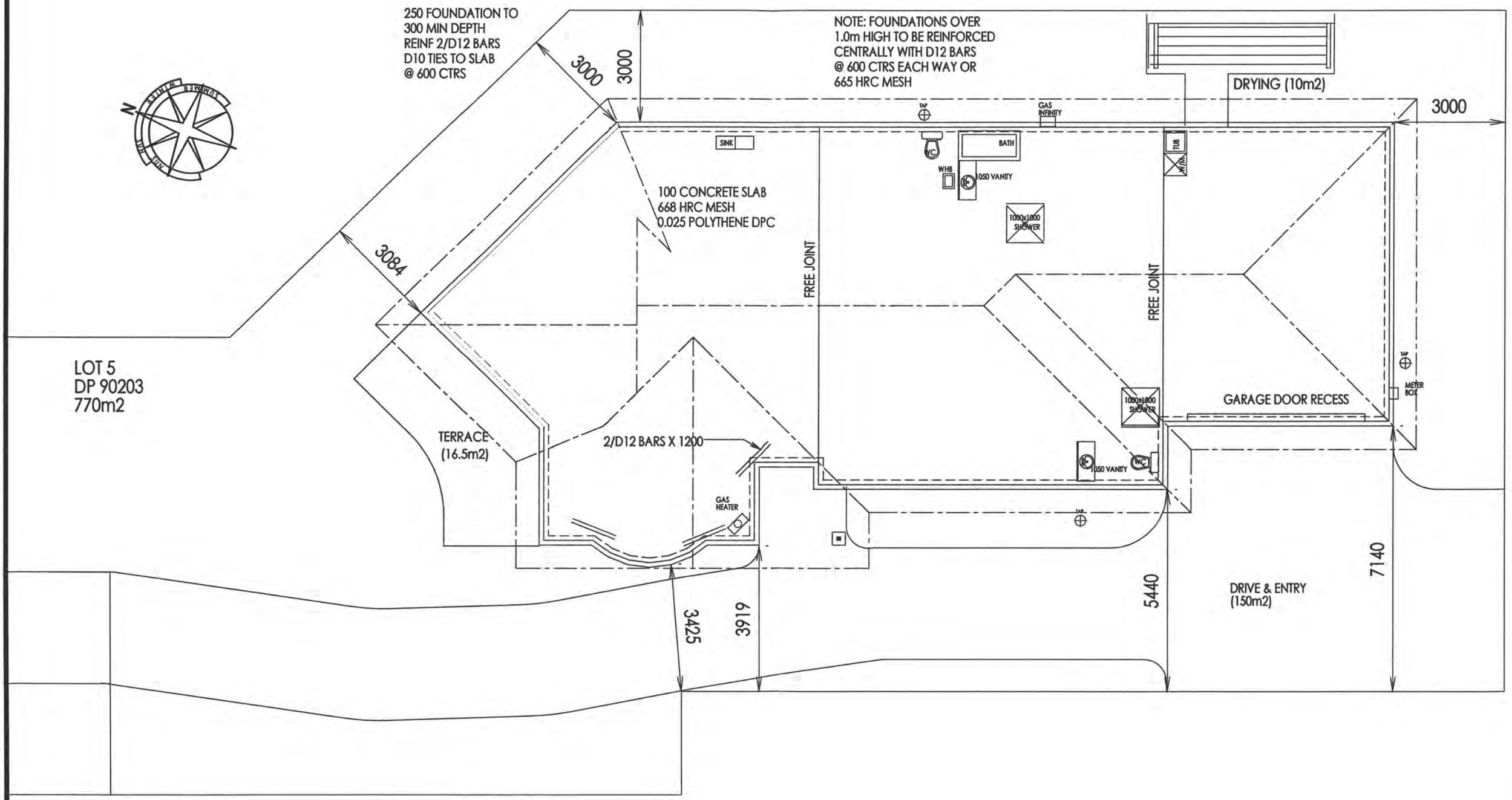

SITE, FOUNDATIONS & DRAINAGE PLAN 1:100

PROPOSED DWELLING FOR PTT - LOT 5 - KOROMIKO GLEN - WAIKANAE - BY HOMECREATORS

PLANMAKERS DRAUGHTING & DESIGN (1991) LTD
P.O.BOX 1502 PARAPARAUMU BEACH

RAY WILSON nzcd (arch) mnzid
PHONE (04)9026081 FAX (04)9026082
EMAIL planmakers@paradise.net.nz

DRAWING	ISSUE NO
3	27/1/04

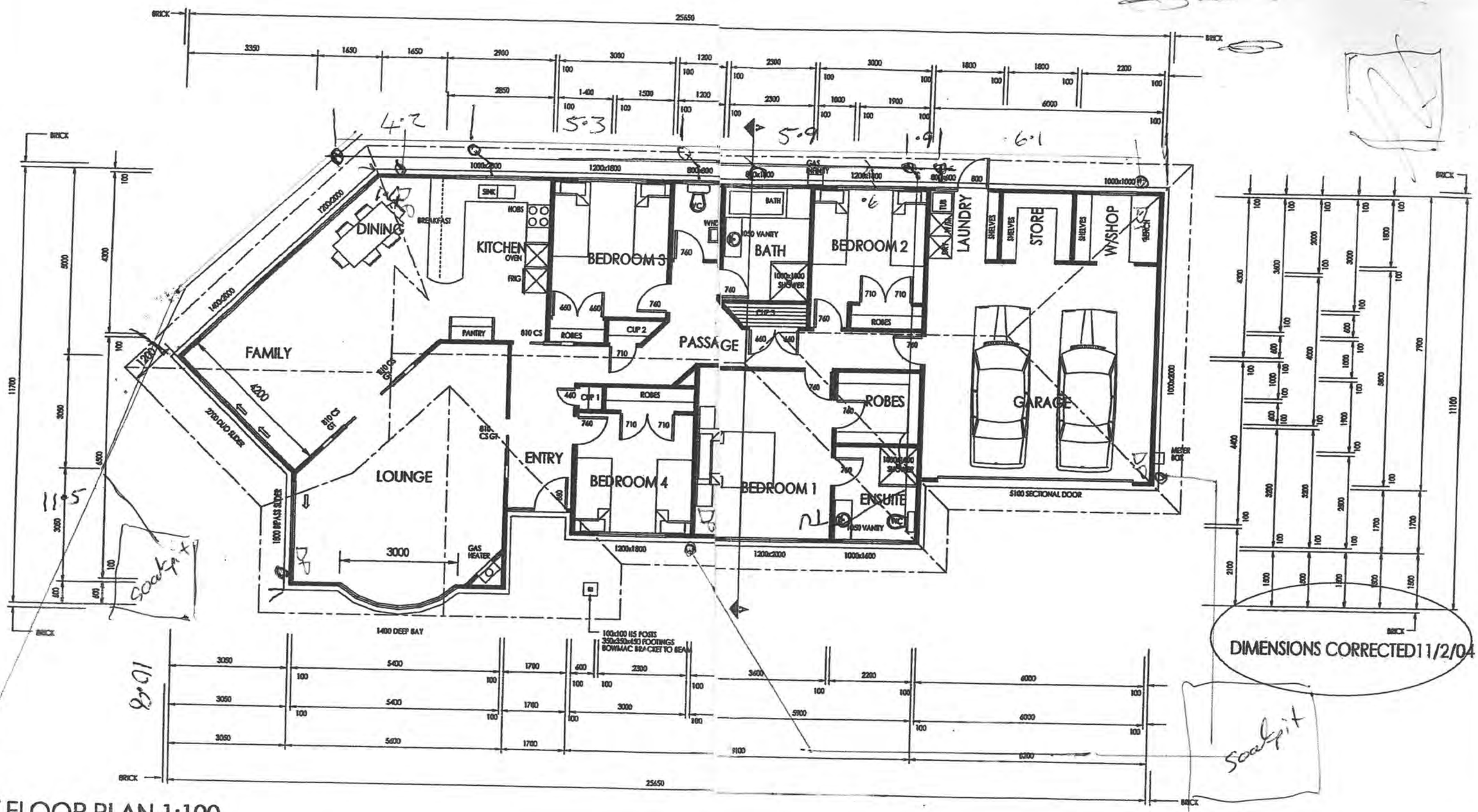

FLOOR PLAN 1:100
AREA 231.5(2492)ft2
PERIMETER 71.2m

3
4 2
1

ELEVATIONS

PROPOSED DWELLING FOR PTT - LOT 5 - KOROMIKO GLEN - WAIKANAE - BY HOMECREATORS

PLANMAKERS DRAUGHTING & DESIGN (1991) LTD
P.O.BOX 1502 PARAPARAUMU BEACH
RAY WILSON nzed (arch) nmzid
PHONE (04)9026081 FAX (04)9026082
EMAIL planmakers@paradise.net.nz

DRAWING	ISSUE NO
1	11/2/04

APPLICATION FOR WATER SUPPLY AND CONNECTION PERMIT

The Borough Engineer
Private Bag
PARAPARAUMU

I, PTT ..... (full name)
PLEASE PRINT

12 Tongariro St ..... (Postal a

hereby apply for an "ORDINARY" service to be laid from the Kapiti Borough Water Supply to the premises owned by me at:

(PROPERTY Address in full if different from above) 5 Koromiko Glen

Lot 5 DP 319476

Fees Payable (on application)

Inspection $

Connection $

Total $

Note: All dwelling units to pay full inspection fees.

The connection fee to be divided equally between dwelling units situat on the same lot sharing a common late

Owners Signature ..... Date .....

THIS PART TO BE COMPLETED BY PLUMBER

I, Bruce Bryant (full name)

of ..... (address)

being a Licensed Craftsman Plumber apply for permission to connect the above premises to the Kapiti Borough Water Supply. I agree to comply in every respect with the Kapiti Borough Water Supply By-l
N.B. Connection NOT permitted until permit obtained.

(Signature) ..... (Craftsman Licence No.) ..... (Date) .....

1. Existing Water Supply ..... To be retained/dismantled
2. Pressure: high/low "Header Tank"/Pressure Reducing Valve
3. H/W Cylinder Type Inewdwg Exhaust Pipe/Pressure Relief Valve
4. Approximate Age of Water Piping ..... Copper/PVC/Alkathene .....
5. If premises have swimming pool what capacity ..... Filter plant Yes/No
6. State precisely how it is proposed to make the new connection:

.....

OFFICE USE ONLY

Permit No.	Job Inspected	Building Register Entry
040086		
Date Issued	Connection Recored	

location

RECEIPT NO.	DATE

VALUATION ROLL NUMBER 1 4 | | | | | |

VALUATION ROLL NUMBER 1 5 | | | | | |

LOT 5 D.P. 319476

NO. DWELLING	17-18 AVAILABLE	UNITS	14-15	UNITS
Inewdwg			19-20	UNITS

WAIKANAE WATER
CONNECTED

Connection

WATER CONNECTION FEE

INSPECTION $ .....

CONNECTION $ .....

KAPITI COAST DISTRICT COUNCIL

APPLICATION FOR SEWER CONNECTION AND PERMIT

The Borough Engineer
Private Bag
PARAPARAUMU

I, P.T. (Full name)
PLEASE PRINT

B. Tongariro St (Postal Address)

hereby apply for an ordinary connection to the Kapiti Borough Sewer from the premises owned by me at

(PROPERTY Address in full if different from above) S. Koromiko Glen

Lot 5 DP 319476

Fees Payable (on application)

Inspection $

Connection $

Total $

Note: All dwelling units to pay full inspection fees.
The connection fee to be divided equally between dwelling units situated on the same lot sharing a common lateral.

Owners Signature Date

THIS PART TO BE COMPLETED BY DRAINLAYER

I, Bruce Bryant (full name)

(address)

being a licensed Drainlayer apply for permission to connect the premises mentioned above to the Kapiti Borough Sewer.

N.B. Connection NOT permitted until permit obtained.

1 new dwg

(Signature) (License No.) (Date)

OFFICE USE ONLY

Permit No. 040086	Job Inspected	Building Register Entry
Date Issued	Connection Recored	

address 5 Koromiko Glen

RECEIPT NO.	DATE

VALUATION ROLL NUMBER 1 4

LOT 5 D.P. 319476

NO. DWELLING		
	11	UNITS
1 new dwg	12	UNITS

Connected

Waikanae Sewer connected

VALUATION ROLL NUMBER 1 5

SEWER CONNECTION FEE

INSPECTION $

CONNECTION $

Producer Statement

Stormwater Drains

Construction Review

Issued by.....Bryant Plumbing Ltd..... **Registration Number**.....1254.....

To Kapiti Coast District Council

In respect to the following

Stormwater Drains installed in accordance with E1 AS1 as shown on the approved plans or as per the attached amended plan

Installed at.....5 Koromiko Glen.....

Building Consent No.....BC040086

As a registered drainlayer, currently holding an annual practicing license, certify that I, or personnel under my control, have carried out the installation of the above system and I believe on reasonable grounds that the installation complies with the New Zealand Building Code.

Signed.....**Date**.....10/6/05

Note: Fully dimensioned as built drain plan to be supplied. (scale 1:100)

Producer Statement

Private Sewer Drains

Construction Review

Issued by Bryant Plbg Ltd **Registration Number** 12511

To Kapiti Coast District Council

In respect to the following

Private Sewer Drains installed in accordance with G13 AS2 or AS/NZS 3500 .2.2 as shown on the approved plans or as per the attached amended plan

Installed at Lot 5 Koromiko Glenn

Building Consent No. BC 060086

As a registered drainlayer, currently holding an annual practicing license, certify that I, or personnel under my control, have carried out the installation of the above system and I believe on reasonable grounds that the installation complies with the New Zealand Building Code.

Signed ..... **Date** 10/2/05

Note: ***Fully dimensioned as built drain plan to be supplied.(scale 1:100)***

Drains may be laid and backfilled without inspection provided that the drain is left under test with a min of 1.0 m head and the inspection at the lateral left exposed.

Producer Statement

Piped Services
&
Sanitary Plumbing Stacks

Construction Review

Issued by..... **Registration Number**.....

To Kapiti Coast District Council

In respect to the following

Piped Services installed in accordance with G12/AS1 as shown on the approved plans or as per the attached amended plan and Sanitary Plumbing Stacks installed in accordance with G13/AS1 or AS/NZS 3500.2.2

Installed at.....

Building Consent No.....

As a Craftsman plumber, currently holding an annual practicing license, certify that I, or personnel under my control, have carried out the installation of the above system and I believe on reasonable grounds that the installation complies with the New Zealand Building Code. Both hot and cold systems have been pressure tested for a period of 15 minutes at a pressure of 1500 kPa.

Signed.....**Date**.....

KAPITI COAST
DISTRICT COUNCIL

SITE INSPECTIONS - BC 040086

Application Details

Applicant Name :	PTT
Contact Address :	12 Tongariro St Paraparaumu 6010
Location :	5 KOROMIKO GLEN, WAIKANAE
Legal Description :	Zone Residential Status history Deadline 16/02/04
Proposal :	New dwelling.

INITIAL INSPECTION

COMMENTS

Tick (✓) approved inspections Cross (x) inspections not approved Strike out inspections not applicable

WORK CANNOT PROCEED PAST EACH STEP UNTIL THAT STEP HAS BEEN INSPECTED, APPROVED AND THIS FORM SIGNED BY THE RELEVANT INSPECTOR

FOUNDATIONS

- Ken Smith ORD TO pour

Date: 7/4/05 Officer: Leon Smith Builder/Contractor/Owner: Jeremy

Approved building consent documents on site: YES / NO

SITING:

Front yard	☐	Left hand side yard	☐	Conforms with approved plan	YES / NO
Rear yard	☐	Right hand side yard	☐	If no, has new site plan been requested	YES / NO
Minimum floor level	✓	Footing size	✓	Foundation wall reinforcing	☐
Pile hole size	☐	Footing reinforcing	✓	Foundation wall size	☐
Anchor pile size	☐	Subfloor vents	☐	Specific design	YES/NO
Pile hole spacing	☐	Steps/stairs	☐	If yes, has Engineer inspected	YES/NO

Has a **Site Instruction** been issued? Yes/No Instruction No: ORD TO NO concrete to be poured until engineer detail.

Is a reinspection required? Yes/No Proposed date of follow up inspection .....

Labels in place? Yes/No Producer Statement Yes/No/NA

COMMENTS

Leon Smith - R10 strips required to free joints 600ø

- ! 3 Rods or 2 Rods 12 in footing

- Require engineers details

Hamish Wells
= 063646728
= 0274459757

Tick (✓) approved inspections Cross (x) inspections not approved Strike out inspections not applicable

PRE-SLAB

BUILDING

Date: 11/4/05 Officer: Ian Smith Builder/Contractor/Owner: Fisher

Minimum floor level	☑	Mesh	☑
DPC	☐	Mesh chairs	☑
Joints taped	☐	Slab thickening	☑
Penetrations	☐	Bottom plate fixings	☑

Specific design Yes / No

If yes, has Engineer inspected Yes / No

Has a **Site Instruction** been issued? Yes/No Instruction No: .....

Is a reinspection required? Yes/No Proposed date of follow up inspection .....

Labels in place? Yes/No Producer Statement Yes/No/NA

COMMENTS

mesh on drain DPM in Place

Plumbing Pipes are under the slab ✓ B Bryant Plumber ✓ not filled with water 11/4/05

Tick (✓) approved inspections Cross (x) inspections not approved Strike out inspections not applicable

EXTERIOR CLADDING

Solid Plaster/Textured Finish

Date: ..... Officer: .....Builder/Contractor/Owner: .....

Rigid backing	☐	Reinforcement	☐
Non rigid backing	☐	Spacers	☐
Building paper	☐	Nailing (Hardies)	☐
Battens (non rigid)	☐	Flashings	☐
Cavity (non rigid)	☐	Control joints	☐
Sheet set out (Hardies)	☐		

Has a **Site Instruction** been issued? Yes/No Instruction No: .....

Is a reinspection required? Yes/No Proposed date of follow up inspection .....

Producer Statement Yes/No/NA

COMMENTS

_____

_____

_____

_____

_____

_____

Tick (✓) approved inspections Cross (x) inspections not approved Strike out inspections not applicable

PRELINE

PLUMBING AND DRAINAGE: Plumber: .....

Date: ..... Officer: ..... Builder/Contractor/Owner: .....

Pressure test	☐	Joint strain	☐
Visual leak check	☐	Pipe insulation	☐
Pipe support/clips	☐	Stacks	☐
Pipe size	☐	Wastes	☐
Pipe material	☐	Supply tank	☐

Has a **Site Instruction** been issued? Yes/No Instruction No: .....

Is a reinspection required? Yes/No Proposed date of follow up inspection .....

Preline Labels in place? Yes/No Producer Statement Yes/No/NA

COMMENTS

BUILDING

Date: 5/5/05 Officer: Leon Smith Builder/Contractor/Owner: .....

Timber treatment	✓	Bracing straps	✓
Ceiling diaphragm	✓	Timber grade	✓
Dragon ties	✓	Wall dwangs	✓
Studs - size/spacing	✓	Trimming studs	✓
Wall insulation	✓	Truss/rafter - fix/space	✓
Posts - size/fixing	✓	Ceiling joists	✓
Lintels/bms - size/fixings	✓	Plate fixings	✓
Ext joinery - labels no labels	✓	Ventilation	✓
Ceiling runners	✓	Ceiling battens	✓
Wall bracing	x	Check exterior claddings not brick	yes
Mech ventilation	☐		

Moisture Content Walls 12 - 17 % Ceiling 10 - 13 %

Has a **Site Instruction** been issued? Yes/No Instruction No: .....

Is a reinspection required? Yes/No Proposed date of follow up inspection ...../...../.....

10/5/05 ✓ can to continue ceiling & internal walls then when bricks completed external.

Preline Labels in place? Yes/No Producer Statement Yes/No/NA

COMMENTS

- Gable end to be lined
- Bricks to Be up before external walls can be lined
- 2 Braces missing circled on plan require reinspection
- Copy - Truss Plan Required

Ceiling & Internal walls only

Tick (✓) approved inspections Cross (x) inspections not approved Strike out inspections not applicable

(To Roofing Braces 75x40) To Roof areas were required Pit.

POSTLINE

Date: 18/5/05 Officer: Leon Smith Builder/~~Contractor/Owner~~: Richard

Sheets nailed as per your schedule ☐ / Insulation to walls ☐ /

Has a **Site Instruction** been issued? Yes/No Instruction No: .....

Is a reinspection required? Yes/(No) Proposed date of follow up inspection .....

Postline Label in place? Yes/No

COMMENTS Richard doing - Finish wiring up Door headers as 4 Braces Marked on plans Builder fixing as I was leaving /

Tick (✓) approved inspections Cross (x) inspections not approved Strike out inspections not applicable

FINAL INSPECTION

Building Exterior — **CHECK PLANS**

Subfloor - ventilation	Flashings - roof penet ✓	Gulley dishes ✓
Decks - structure	hips ✓	Wastes to gullys ✓
Balustrades - design	valleys ✓	Terminals vents ✓
height	gables ✓	Spouting - Downpipes ✓
Steps/Stairs - design	flues ✓	Landscaping & ground levels ✓
handrail	Cladding (ground clearance)	Texture Coating Warranty
Flashings - windows ✓	Roofing & Fixings (roofing warranty) ✓	

Building Interior — **CHECK FITTINGS**

Service area floors & walls ✓	Food storage ✓	Water temperature ✓
Stair design	Nat. ventilation ✓	Solid fuel heater GAS
Handrails	Mech. Ventilation ✓	Supply tank
Barriers	Insulation ✓	Trap seals & AA Valves ✓
Lightings ✓	Hot water cylinder flues	Cistern flushing ✓
Laundering ✓	Hot water cylinder valves	WC pan connection ✓
Cooking facilities ✓	Hot water cylinder rest	Septic Tank (engineers inspc report)
	Tempering valve - Infinity 24	Windows - labels No look VH Level 2
		Safety glass

✓ - smoke detectors, Ensite shower & Windows.

N/A

Bathroom window shower Door not etched

Footpath crossing installed Yes/No Berm damaged Yes/No

Refund crossing deposit Yes/No Engineering site reports required Yes/No

Stormwater & site drainage appear satisfactory Yes/No Engineering site reports received Yes/No

Has a Site Instruction been issued? Yes/No NTR Instruction No. .....

Producer Statement Yes/No/NA

OK to issue final code compliance certificate. Yes/No once letter is received from shower installer confirm both shower doors are safety glass.

If an interim certificate is issued please list proposed conditions on the reverse of this form.

Is a reinspection required? Yes/No Proposed date of follow up inspection .....

Comments:

2/9/05 ✓ ① Pouns on Bth showers not etched Bathroom & ensite.

✓ ② GAS Certificate

ok to issue C.C.C.

Tick (✓) approved inspections Cross (x) inspections not approved Strike out inspections not applicable

Costing Sheet Minor Work & Residential New Dwellings

Application No: 040086	Admin = $45 per hour	Engineering
Date: 30/1/04	Plan Vetting = $70 per hour	Technical Assessment/Peer Review
Site Address: 5 KOROMIKO	Inspections = $65	Cost + 10%

	Classification c/T ordered for 000002	Plan Vetting				Consultants			Inspections					Set Fee Portion of Consent Fee	PIM Portion Of Consent Fee	Total Fee Excluding BRANZ, BIA Levies & Refundable Damage Deposits	Total (A) Plus
		Plumbing	Drainage	Building	E health	District Plan	Fire	Engineering	Site	Plumbing	Drainage	Building	E Health				
1	Solid Fuel Heater													$45	Nil	$110	
2	Plumbing Work													$45	$68	$175	
3	Drainage Work													$45	$68	$175	
4	Sheds/Retaining Walls/Carports													$144	$130	$307	
5	Decks/Swimming & Spa Pools Conservatories/Pergolas & Other Minor Works													$144	$130	$298	
6	Minor Farm Buildings													$144	$130	$372	
7	Proprietary Garages, Standard													$189	$130	$482	
8	Proprietary Garages, with Firewall													$189	$130	$549	
9	Garages, Custom Design													$189	$130	$617	
	Residential New Dwellings																
10	Single Story Brick Veneer													$420	$165	$1378 -28.50	1349.50
11	Single Story Weatherboard													$420	$165	$1443	
12	Single Story Stucco/Texture Coating/Ply/Steel/Block													$420	$165	$1573	
13	Multi Story Brick Veneer													$740	$165	$1838	
14	Multi Story Weatherboard													$740	$165	$1903	
15	Multi Story Stucco/Texture Coating/Ply/Steel/Block													$740	$165	$2033	
30	Relocated Residential Dwellings													$281	$165	$749	

Note. Double Units charged at Single Unit Rate plus 50%
Dwellings with Multiple Cladding Types Charged at Stucco/*Texture Coating/Ply/Steel/Block rate*

CONSENT DATA INPUT REQUIREMENTS

REQUIRED INSPECTIONS		STANDARD ADDENDA			
14	✓	32	✓	21	✓
1	✓	2	✓	22	
17		3	✓	23	
7	✓	4	✓	23A	
16		5		24	
2	✓	6		24A	✓
3		7	✓	25	
22		8		26	
20		8A		27	
18		8B		28	✓
19	✓	9	✓	29	
4	✓	10		30	
8		11		31	
5	✓	12		33	
15	✓	13		34	
10	✓	14		38	
		15		39	
		16		40	
		17		41	
		18		42	
		19		43	
		20		44	✓

STANDARD CONSENT CONDITIONS
35
36
37

NON STANDARD ADDENDA

FOR COUNCIL USE:

DEPARTMENT	TICK FOR REFERRAL	COMMENTS	APPROVING OFFICER/ DATE
Resource Consents	✓	No District Plan issues	AGH 10.2.4
Plumbing and Drainage	✓		17/2/04
Building	✓		27/2/04
Fire Design			
Compliance Schedule			
Structural			
Hazardous Substances			
Environmental Health			
Site- Foopath & Entrance Conditions	Ground		
LEVEL BUILDING SITE VEHICLE ENTRANCE EXISTING PRIVATE R.O.W.?	FIRM STONEY GROUND APPEARS SATISFACTORY		BCM 5/2/04

NOTES:

KAPITI COAST DISTRICT COUNCIL

175 Rimu Road
Private Bag 601
Paraparaumu
Phone: [04] 9045700
Fax: [04] 9045830

RECEIVED
28 JAN 2004
KAPITI COAST DISTRICT COUNCIL

Porirua City Council

5 Hagley Street
P O Box 50218
Porirua City
Phone: [04] 237 5089
Fax: [04] 237 1439

APPLICATION FOR BUILDING CONSENT
Section 33, Building Act 1991

To: Kapiti Coast District Council/~~Porirua City Council (delete one)~~
[Tick each applicable box and attach relevant documents]

App. No. 040086

ANTICIPATED COMMENCEMENT DATE: ASAP ***FINISH DATE:*** ASAP

PART A : GENERAL
[Complete Part A in all Cases – Refer over for Part B, C and D, sign and date]

APPLICANT

Owner Name: P.T.T.

Mailing Address: 12 Tongariro St
Paraparaumu.

Contact Name: Dave Smithson

Phone: Wk: 04 2971685 **Hm** _____

Cellphone No: 0274 425 215

Fax: 04 2971627

*Under section 33 of the Building Act 1991, the applicant must be the owner of the land on which building work is contemplated or a person who or which has agreed in writing, whether conditionally or unconditionally, to purchase the land or any leasehold estate or interest in the land, or to take a lease of the land, while the agreement remains in force.

FOR COUNCIL USE

Received: ____/____/____
Application Fee: $____
Receipt No: ____
Balance of Fees: $____
Receipt No: ____
Date: ____/____/____

NOTE: Balance of fees are payable on consent approval

PROJECT

New or Relocated Building ✓
Alterations or Additions
Accessory Building or Fire
Building demolition or Removal

Intended use, e.g Dwelling, Carport, Garage etc

Being stage 1 of an intended 1 stages.

Estimated value (inclusive of GST)

$ 220.000

Intended life: (of building)

Indefinite but not less than 50 years

Specified as X years

PROJECT LOCATION

Street Address (if any) 5 ~~6~~ Koromiko St Glen Waikanae

Legal description
(as shown on certificate of title rates notice, if any)

Lot 5 DP 319476

Valuation No. 1494/43504

This application is for:

- ☑ Building Consent only, in accordance with Project Information Memorandum
- ☐ Both Building Consent and a project Information Memorandum

SCANNED

PART B : BUILDING DETAILS

(Complete Part B in all cases)

This application is accompanied by *(tick each applicable box, attach relevant documents in duplicate):*

- ☐ The drawings, specifications and other documents according to which the building is proposed to be constructed to comply with the provisions of the building code, with supporting documents, if any, including:
  - ☐ Building certificates
  - ☐ Producer statements
  - ☐ References to accreditation certificates issued by the Building Industry Authority
  - ☐ References to determinations issued by the Building Industry Authority
- ☐ Proposed procedures, if any, for inspection during construction

PART C : PROJECT DETAILS

(Complete Part C only if you have not applied separately for a project information memorandum)

- ☐ Location, in relation to legal boundaries, and external dimensions of new, relocated, or altered buildings
- ☐ New provisions to be made for vehicular access, including parking
- ☐ Provisions to be made in building over or adjacent to any road or public place
- ☐ New provisions to be made for disposing of stormwater and wastewater
- ☐ Precautions to be taken where building work is to take place over existing drains or sewers or in close proximity to wells or watermains
- ☐ New connections to public utilities
- ☐ Provisions to be made in any demolition work for the protection of the public, suppression of dust, disposal of debris, disconnection from public utilities and suppression of noise
- ☐ Any cultural heritage significance of the building or building site, including whether it is on a marae

PART D : KEY PERSONNEL

Designer(s): Planmakers

Building Certifier(s): _____

Builder/s Homecreators.

Registered Drainlayer: Bruce Bryant REG NO: _____

Craftsman Plumber: Bruce Bryant. REG NO: _____

Other: _____

PLEASE NOTE

The information provided in support of this application is public and as such is freely available on request. However under Section 27(3) of the Building Act 1991 you may for security and/or copyright reasons request the plans and specifications pertaining to this application be marked as confidential by completing the following section.

CONFIDENTIALITY	SIZE OF BUILDING
Plans and Specifications **I/We require that my/our:** 1. ☐ plans 2. ☐ specifications be treated as confidential in order to protect either: 3. ☐ the security of the building; and/or 4. ☐ the copyright Signed: _____	**Floor area m²** 231.5 **No of stories** 1 **No of Units** 1

Signed for and on behalf of the Applicant:

Name: _____

Position: _____ Date: 28/1/04

FOR OFFICE USE ONLY

FEES		APPLICATION DEPOSIT $.....
Building	$1349.50	
Sewer Connection	$.....	RECEIPT NO ..... DATE.....
Water Connection	$.....	
Vehicle Crossing	$.....	INVOICE NO 90541 DATE 4-3-04
Damage Deposit	$~~400~~	
Structural Checking	$.....	RECEIPT NO direct credit DATE 20.4.04
Building Research Levy	$220.00	
Development Levy	$.....	FEES PAID BY: Homecreators Ltd
BIA Levy	$143.00	
Compliance Schedule	$.....	
Digital Storage Fee	$2850	BUILDING CONSENT NUMBER 040086 DATE ISSUED 4-3-04
Certificate of Title Charge	$25.00	
Photocopying	$.....	
SUBTOTAL	$1766.00	AUTHORISATION FOR REFUND OF DEPOSIT
Less Deposit Paid	$.....	Deposit held = $.....
TOTAL	$1766.00	Cost to Repair Damage Caused During Construction = $.....
GST INCLUDED	$.....	Total Balance to be Refunded
		Authority Number:
		Authorised: DATE:

NO DIF

Issue BC ✓
+ Put back in invoice bin

Kapiti Coast Distric BANKING MANUAL PROCESS STATEMENT Version v10.0

Line Date Amount Detail DETAIL OFF AGEING OFF CASHIER NO : 20

04 20/04/2004 1,766.00 BC040086 HOMECREATORSHOMECREATORS LTD

KAPITI COAST DISTRICT COUNCIL

Building Consent

Section 35, Building Act 1991

Application

PTT 12 Tongariro St Paraparaumu 6010	No. Issue date Application date	040086 4/03/04 30/01/04

Project

Description	New Construction Being Stage 1 of an intended 1 Stages New dwelling.
Intended Life	Indefinite, but not less than 50 years
Intended Use	Residential.
Estimated Value	$220,000
Location	5 KOROMIKO GLEN, WAIKANAE
Legal Description	
Valuation No.	1494143504

Charges

The Council's charges paid on uplifting this Building Consent, in accordance with the attached details are:

	$	1,403.00
Building Research Levy	$	220.00
Building Industry Authority Levy	$	143.00
Total	$	1,766.00

This building consent is a consent under the Building Act 1991 to undertake building work in accordance with the attached plans and specifications so as to comply with the provisions of the building code. It is not a consent under the Resource Management Act and does not affect any duty or responsibility under any other Act nor permit any breach of any other Act.

Signed for and on behalf of the Council:

Name: _____ **Date:** 4-3-04

Addenda to Application

Application

PTT 12 Tongariro St Paraparaumu 6010	No.	040086

Project

Description	New Construction Being Stage 1 of an intended 1 Stages New dwelling.
Intended Life	Indefinite, but not less than 50 years
Intended Use	Residential.
Estimated Value	$220,000
Location	5 KOROMIKO GLEN, WAIKANAE
Legal Description	
Valuation No.	1494143504

Builder: Homecreators

General Requirements

a) The District Inspector is to be given 24 hours' notice before carrying out the following inspections:

1. INITIAL INSPECTION - PREVIOUSLY COMPLETED
2. FOUNDATION INSPECTION
3. PRE-CONCRETE SLAB INSPECTION OF PLUMBING
4. PRE-SLAB INSPECTION, CONCRETE FLOOR
5. BRICK VENEER INSPECTION
6. PRELINING INSPECTION, MOISTURE TEST, CHECK BRACING
7. POST-LINING INSPECTION, LININGS, FIXED AS PER BRACE DESIGN
8. COMPLETION INSPECTION
9. WATER TEST ON SEWER DRAINS

b) To arrange for any of the above required inspections by the District Inspector, please contact the building inspectorate on (04) 902 2845 between the hours of 8.00am and 4.30pm.

2	Addenda to Application 040086

1. LAPSE AND CANCELLATION OF BUILDING CONSENT. A building consent shall lapse and be of no effect if the building work concerned has not been commenced within 6 calendar months after the date of issue. Or within such further period as the territorial authority allows.
2. The inspection of all specific design components of the building is the responsibility of the Design Engineer who is also required to supply a written report to Council.
3. NZS3604 is an Acceptable Solution in terms of the New Zealand Building Code and is a recommended reference document for timber framed buildings.
4. Fit head, jamb, sill flashings and proprietary sill tray to external joinery. Fit airseals to the inside edges of the window reveals.
5. Note and comply with endorsements on approved plans.
6. Minimum heights of finished concrete slab-on-ground floors above adjoining finished ground level to comply with the current NZS3604.
7. Section F7 of the New Zealand Building Code requires the installation of an approved smoke alarm system for detection and warning of fire. Alarms are to be of a type which include a reset and test buttons.
8. Provide from your Contractor a warranty covering the roof and fascia gutter system, including product, design and installation.
9. Exterior cladding system to be previously completed and inspected by Council's Inspector prior to any subsequent prelining inspection/approval being granted for the fixing of internal linings.
10.

I have read the foregoing requirements, and the Owner/Builder/Authorised Person hereby agrees to comply with them.

OWNER/BUILDER/
AUTHORISED PERSON **Date:**

COUNCIL COPY

KAPITI COAST
DISTRICT COUNCIL

Building Control Services

Thank you for choosing KCDC Building Control Services to process and inspect your building project.
It is our aim to provide you with timely and professional building control services. We welcome any suggestions for improvements to the services we provide.

Ken Smith
Building Control Manager
Ph (04) 904 5855
Cell 027 4501509

Building Consent Number : 040086

COUNCIL COPY

Applicant Name : PTT

Proposal : New dwelling.

Location : 5 KOROMIKO GLEN, WAIKANAE

Legal Description : Zone Residential Status history

Please note the list below which identifies the inspections required for this project. Whenever possible allow sufficient time to notify KCDC Building Control Services to enable those inspections to be carried out. You will notice some additional inspections which are extra to those commonly required. These are to ensure Compliance with the NZ Building Code and have benefits for you. They will be provided at no additional cost to you or your contractor.

Inspection	Required	Sign off	Date
Initial (previously completed)	Yes		
Foundation	Yes		
Sub floor pre b-boards (reloc)	No		
Pre slab plumbing	No Yes		11/4/05
Pre block fill	No		
Pre slab	Yes		11/04/05
Sub floor	No		
Exterior cladding (general)	Yes		
Pre texture coating	No		
Pre stucco	No		
Brick veneer	~~No~~ Yes		12.05.05
Pre lining 5/5/05	Yes		
Post lining	Yes		
Drain test	No		
Completion	Yes		

27/02/2004

APPROVED
BY BUILDING
MARK FITZPATRICK
Officer

CAUTION

Plans have been digitally reproduced and may not be to scale.

All references to standards and codes etc shall be taken as reference to latest version including amendments.

Section F7 of the New Zealand Building Code requires the installation of an approved smoke alarm system for detection and warning of fire.

DRAWINGS

1 **FLOOR PLAN**
2 **ELEVATIONS & CROSS SECTION**
3 **SITE, FOUNDATIONS & SERVICES**
4 **BRACING PLAN (Schedules Attached)**

PROPOSED DWELLING FOR PTT - LOT 5 - KOROMIKO GLEN - WAIKANAE - BY HOMECREATORS

PLANMAKERS DRAUGHTING & DESIGN (1991) LTD
P.O.BOX 1502 PARAPARAUMU BEACH
RAY WILSON nzcd (arch) mnzid
PHONE (04)9026081 FAX (04)9026082
EMAIL planmakers@paradise.net.nz

DRAWING	ISSUE NO
COVER	27/01/04

27/02/2004

APPROVED BY BUILDING
Mark Fitzpatrick
Officer

APPROVED BY P & D
Simon Copp
Officer
17/2/04

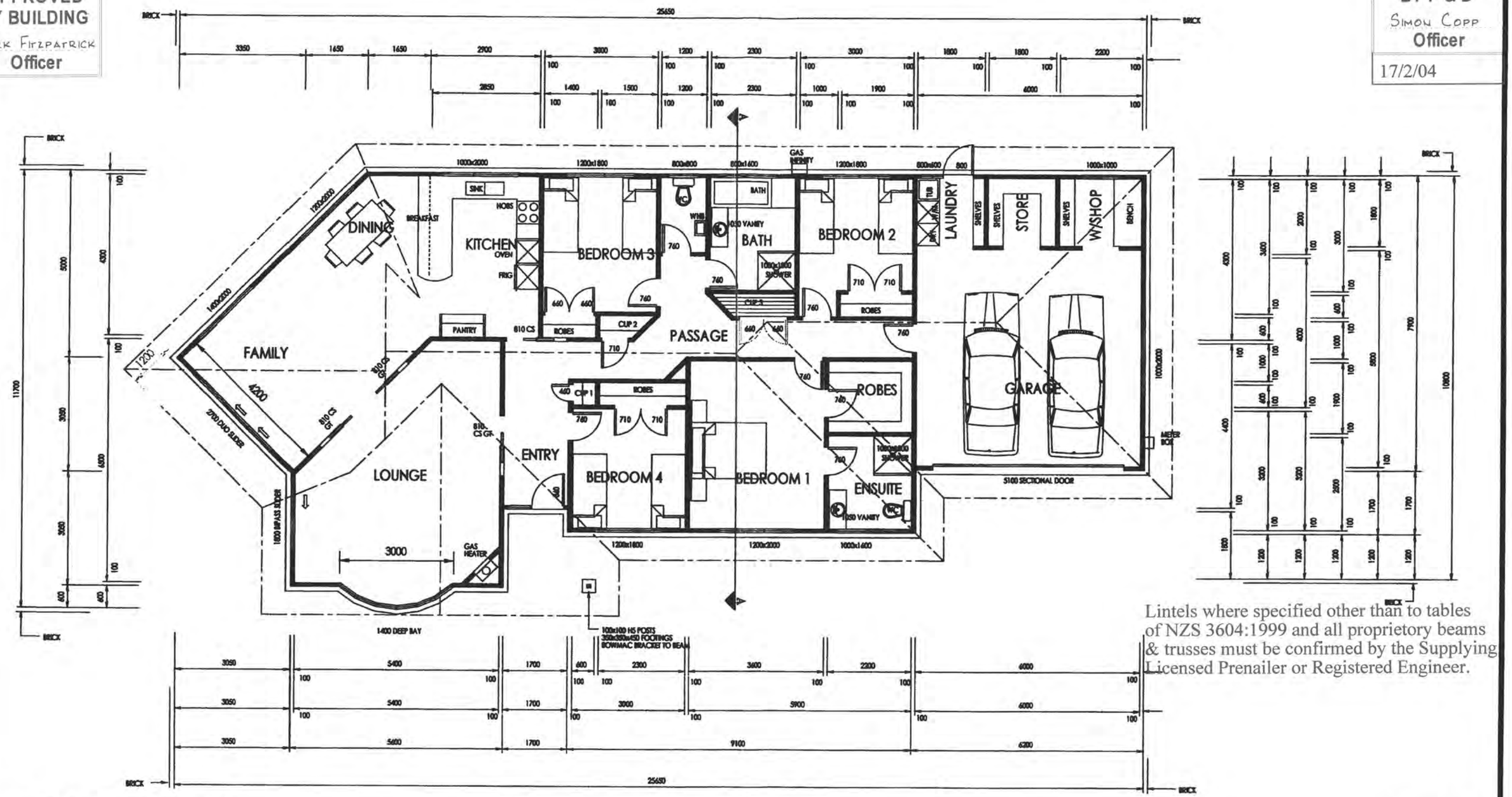

Lintels where specified other than to tables of NZS 3604:1999 and all proprietory beams & trusses must be confirmed by the Supplying Licensed Prenailer or Registered Engineer.

FLOOR PLAN 1:100
AREA 231.5(2492)ft2
PERIMETER 71.2m

Stress graded framing to conform to relevant manuf' producer statement and selection tables.

WATER PIPES TESTED TO 1500KPA

3 4 2 1

ELEVATIONS

PROPOSED DWELLING FOR PTT - LOT 5 - KOROMIKO GLEN - WAIKANAE - BY HOMECREATORS

PLANMAKERS DRAUGHTING & DESIGN (1991) LTD
P.O.BOX 1502 PARAPARAUMU BEACH
RAY WILSON nzcd (arch) mnzid
PHONE (04)9026081 FAX (04)9026082
EMAIL planmakers@paradise.net.nz

DRAWING	ISSUE NO
1	27/01/04

27/02/2004

APPROVED BY BUILDING
MARK FITZPATRICK
Officer

APPROVED BY P & D
SIMON COPP
Officer
17/2/04

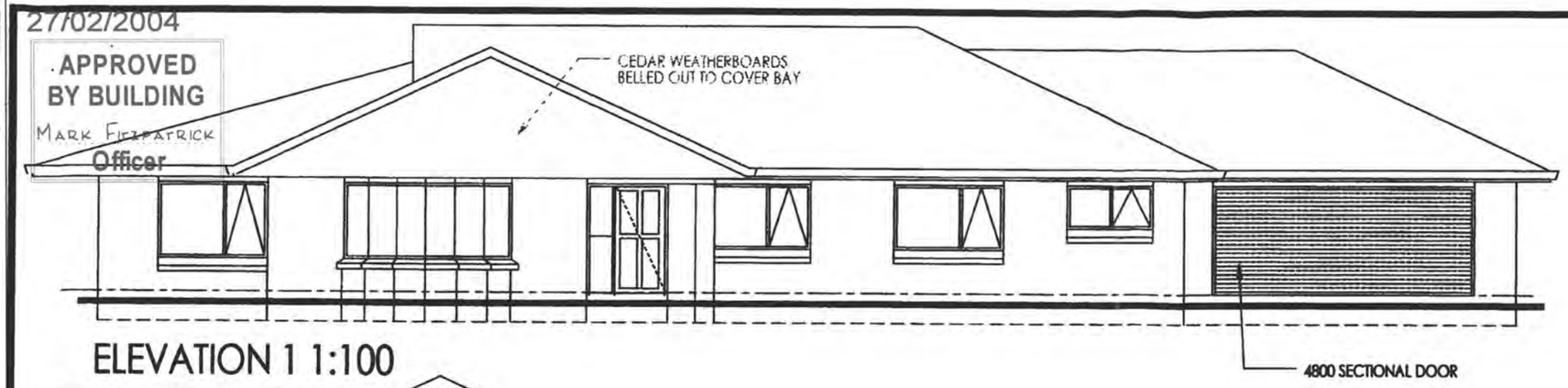

ELEVATION 1 1:100

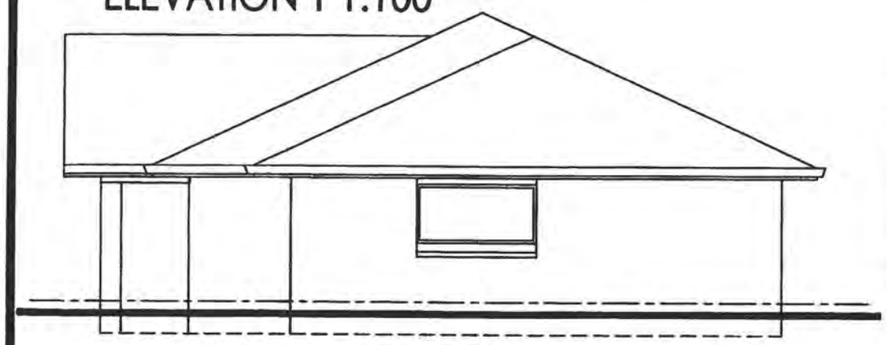

ELEVATION 2



ELEVATION 4 1:100

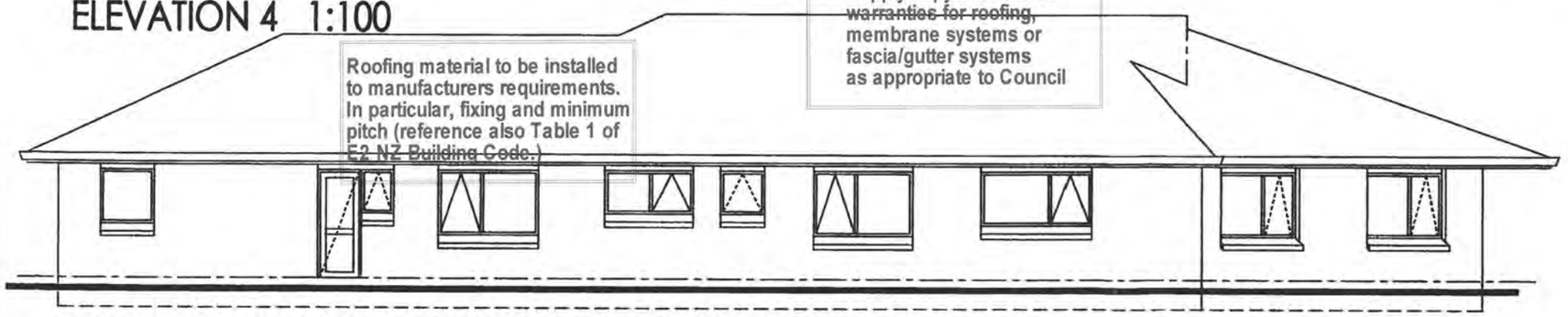

ELEVATION 3 1:100

HIGH WIND ZONE

Refer section 10 of NZS 3604 (1999) for roof framing and fixing requirements.
[purlins - 10.2.1.16], [rafters - 10.2.1.3], [trusses - 10.2.2]
Max stud spacing - refer NZS 3604 stud tables.

The truss manufacturer must confirm the minimum size requirement of all lintels or beams supporting girder truss point loads. Provide in writing to Council and contractor.

Roofing material to be installed to manufacturers requirements. In particular, fixing and minimum pitch (reference also Table 1 of E2 NZ Building Code.)

Supply copy of relevant warranties for roofing, membrane systems or fascia/gutter systems as appropriate to Council

Cladding to be installed to manufacturers requirements in particular fixing and ground clearance.

Insulation to (NZS 4218) 1996

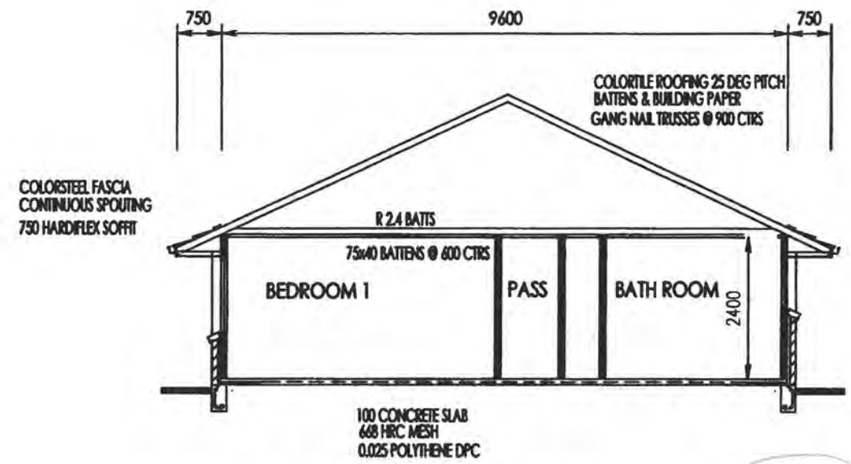

SECTION A-A 1:100

GLAZING CONFORM NZS 4223 PARTS 1, 2, 3.	
FIT SUITABLE FLASHINGS ETC. JOINERY	
HIGH WIND	1100pa DWP

PROPOSED DWELLING FOR PTT - LOT 5 - KOROMIKO GLEN - WAIKANAE - BY HOMECREATORS

PLANMAKERS DRAUGHTING & DESIGN (1991) LTD
P.O.BOX 1502 PARAPARAUMU BEACH
RAY WILSON nzcd (arch) mnzid
PHONE (04)9026081 FAX (04)9026082
EMAIL planmakers@paradise.net.nz

DRAWING	ISSUE NO
2	27/01/04

PLUMBER / DRAINLAYER TO FILL OUT ATTACHED PRODUCER STATEMENT FORMS AND RETURN TO COUNCIL ALSO PROVIDE AN ASBUILT DRAINAGE PLAN

APPROVED BY PLANNING
ARNOLD HAWKINS
Officer
10/02/2004

~~APPROVED~~ BY P & D
SIMON COPP
Officer
17/2/04

250 FOUNDATION TO 300 MIN DEPTH REINF 2/D12 BARS D10 TIES TO SLAB @ 600 CTRS

NOTE: FOUNDATIONS OVER 1.0m HIGH TO BE REINFORCED CENTRALLY WITH D12 BARS @ 600 CTRS EACH WAY OR 665 HRC MESH

3000

3000

3084

100 CONCRETE SLAB
668 HRC MESH
0.025 POLYTHENE DPC

FREE JOINT

FREE JOINT

DRYING (10m2)

3000

SINK

BATH

WHB

1050 VANITY

1000x1000 SHOWER

GAS METER

Free joint
2/D12
DPM
R10 @ 600mm c/c

LOT 5
DP 90203
770m2

TERRACE (16.5m2)

2/D12 BARS X 1200

GAS HEATER

GARAGE DOOR RECESS

METER BOX

1050 VANITY

WC

CHECK P.I.M INFORMATION FOR SERVICE CONNECTIONS PROVIDED IN THE PLUMBING @ DRAINAGE PACK.

3425

3919

5440

7140

DRIVE & ENTRY (150m2)

Bottom Plate Fixing
10mm dia. max 900mm crs. 12mm dia. max 1400mm crs. Approved anchors (fixed to manufactures instructions.) Ramset ~~Dynabolt "Plus"~~, Trubolts & Reid Anchors.

FOUNDATION WALL FOOTINGS	
REINFORCED CONCRETE :	
Single storey 165* wide	1 rod
Two Storey 200* wide	2 rods
REINFORCED MASONARY :	
Single storey 190* wide	2 rods
Two Storey 240* wide	4 rods

EXPOSED CONCRETE STRENGTH REQUIREMENTS
Within 500m of mean high tide - 25mpa
Beyond 500m of mean high tide - 20mpa

MINIMUM FINISHED GROUND LEVEL CLEARANCES.
BRICK VENEER
Protected ground minimum 100mm.
Unprotected ground minimum 150mm
OTHER CLADDINGS
Protected ground minimum 150mm.
Unprotected ground minimum 225mm.

SITE, FOUNDATIONS & DRAINAGE PLAN 1:100

PROPOSED DWELLING FOR PTT - LOT 5 - KOROMIKO GLEN - WAIKANAE - BY HOMECREATORS

PLANMAKERS DRAUCHTING & DESIGN (1991) LTD
P.O.BOX 1502 PARAPARAUMU BEACH
RAY WILSON nzcd (arch) mnzid
PHONE (04)9026081 FAX (04)9026082
EMAIL planmakers@paradise.net.nz

DRAWING	ISSUE NO
3	27/1/04

27/02/2004

APPROVED
BY BUILDING
MARK FITZPATRICK
Officer

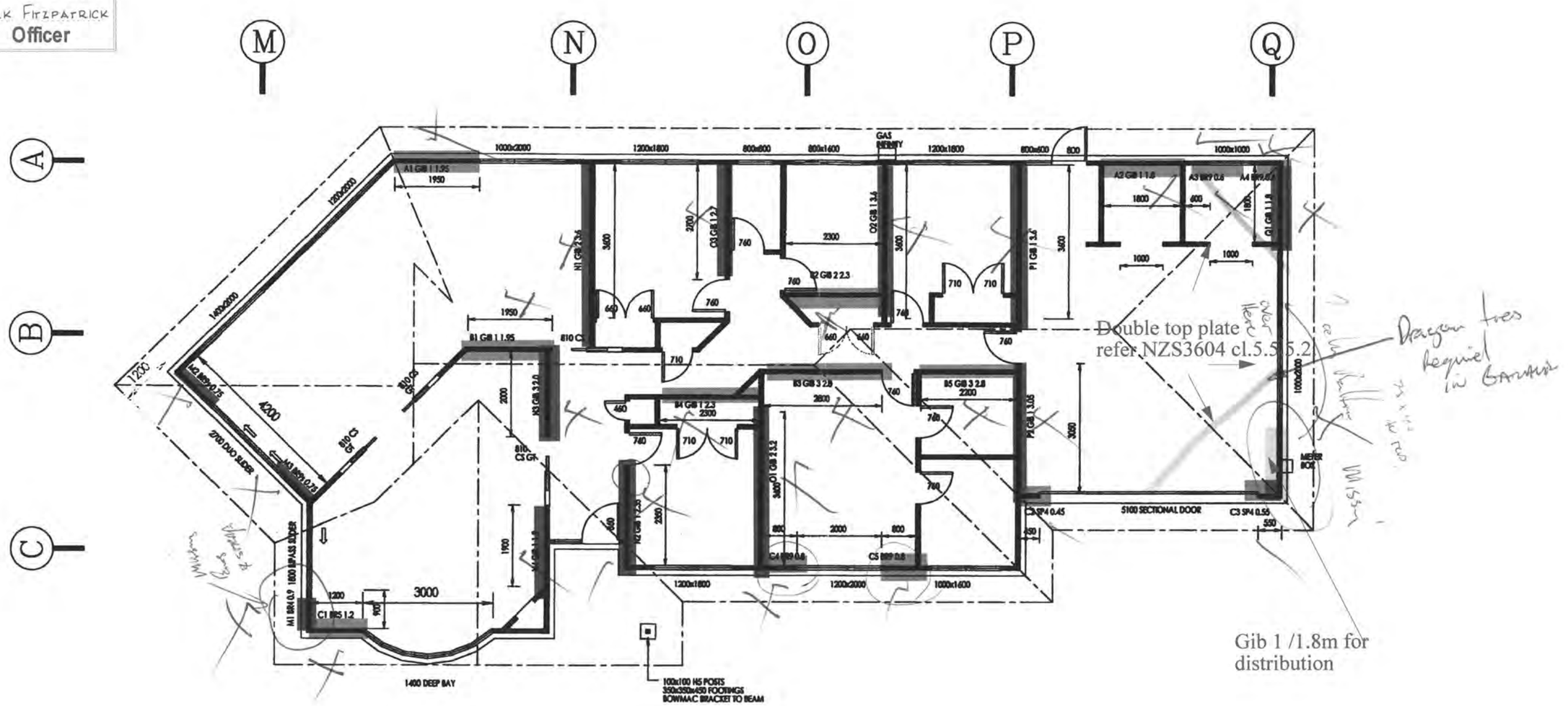

Double top plate over here refer NZS3604 cl.5.5.5.2

Dragon ties Required in GARAGE

Gib 1 /1.8m for distribution

BRACING PLAN 1:100
AREA 231.5(2492)ft2
PERIMETER 71.2m

PROPOSED DWELLING FOR PTT - LOT 5 - KOROMIKO GLEN - WAIKANAE - BY HOMECREATORS

PLANMAKERS DRAUGHTING & DESIGN (1991) LTD
P.O.BOX 1502 PARAPARAUMU BEACH
RAY WILSON nzcd (arch) mnzid
PHONE (04)9026081 FAX (04)9026082
EMAIL planmakers@paradise.net.nz

DRAWING	ISSUE NO
4	27/01/04

27/02/2004

APPROVED
BY BUILDING
MARK FITZPATRICK
Officer

Gib® Wall Bracing Calculation Sheet A — single storey — V1.2A

Job Details

Name	PTT
Street and Number	KOHOMIKO GLEN
Lot and DP Number	LOT 5 DP
City/Town/District	WAIKANAE
Designer and date	PLANMAKERS 27-01-04

Building Specification

Location of Storey	single	
Floor Loading	2 kPa	
Foundation Type	slab	
Building Height to Apex (m)	6	
Roof Height above Eaves (m)	3	
Stud Height (m)	2.4	
Cladding Weight (top or single)	heavy	
Cladding Weight (lower)	light	*not applicable (single storey building)*
Cladding Weight (subfloor)	light	*not applicable (slab)*
Roof Weight	light	
Roof Pitch (degrees)	0-25	
Room in Roof Space	no	
Building Length (m)	27	
Building Width (m)	11.1	
Gross Building Plan Area (m2)	231.6	

Building Location

Wind Zone	***High***	**Earthquake Zone**
Region	R2	A
Terrain	Coastal	
Exposure	Sheltered	
Topography	Gentle	*Enter at least 'moderate' in a Lee Zone*

Bracing Units required for Wind

per m	subfloor	walls
W along	n/a	78 BUs/m
W across	n/a	78 BUs/m

Totals	subfloor	walls
W along	n/a	866 BUs ✓
W across	n/a	2106 BUs ✓

Bracing Units required for Earthquake

per m2	subfloor	walls
E	n/a	5.2 BUs/m2

Totals	subfloor	walls
E along	n/a	1204 BUs ✓
E across	n/a	1204 BUs

Gib® Wall Bracing Calculation Sheet B — single storey — V1.2A

Along								
Wall or Bracing Line		*Bracing Elements provided*					*Wind*	*Earthq.*
1	2	3	4	5	6	7	8W	9EQ
Line Label	Minimum BUs Req/Ach	Bracing Element No.	Supplier	Bracing Type	Element Length L (m)	Element Height H (m)	BUs Achieved	BUs Achieved
A	270	1	Gib®	Gib1a	1.95	2.4	107	98
		2	Gib®	Gib1a	1.8	2.4	99	90
		3	Gib®	BR9	0.6	2.4	66	57
line totals		4	Gib®	BR9	0.6	2.4	66	57
W	338	5		none		2.4		
EQ	302	6		none		2.4		
B	70	1	Gib®	Gib1a	1.95	2.4	107	98
		2	Gib®	Gib2a	2.3	2.4	173	138
		3	Gib®	Gib2b	2.8	2.4	224	196
line totals		4	Gib®	Gib1a	2.3	2.4	127	115
W	773	5	Gib®	Gib3	2.2	2.4	143	132
EQ	679	6		none		2.4		
C	230	1	Gib®	BR5	1.2	2.4	138	102
		2	Carter	sp4	0.45	2.4	32	38
		3	Carter	sp4	0.55	2.4	39	47
line totals		4	Gib®	BR9	0.8	2.4	88	76
W	384	5	Gib®	BR9	0.8	2.4	88	76
EQ	339	6		none		2.4		
D		1		none		2.4		
		2		none		2.4		
		3		none		2.4		
line totals		4		none		2.4		
W		5		none		2.4		
EQ		6		none		2.4		
E		1		none		2.4		
		2		none		2.4		
		3		none		2.4		
line totals		4		none		2.4		
W		5		none		2.4		
EQ		6		none		2.4		

	Wind	Earthq.
Totals Achieved	1496 ✓	1319
	OK	*OK*
Totals Required (from Sheet A)	866	1204

✓

27/02/2004

PTT

PLANMAKERS

Gib® Wall Bracing Calculation Sheet B — single storey — V1.2A

Wall or Bracing Line		Bracing Elements provided					Wind	Earthq.
1	2	3	4	5	6	7	8W	9EQ
Line Label	Minimum BUs Req/Ach	Bracing Element No.	Supplier	Bracing Type	Element Length L (m)	Element Height H (m)	BUs Achieved	BUs Achieved
M	66	1	Gib®	BR4	0.9	2.4	90	77
		2	Gib®	BR9s	0.75	2.4	58	50
		3	Gib®	BR9s	0.75	2.4	58	50
line totals		4		none		2.4		
W	206	5		none		2.4		
EQ	176	6		none		2.4		
N	70	1	Gib®	Gib2b	3.6	2.4	288	252
		2	Gib®	Gib1a	2.35	2.4	129	118
		3	Gib®	Gib3	2	2.4	130	120
line totals		4	Gib®	Gib1a	1.9	2.4	105	95
W	652	5		none		2.4		
EQ	585	6		none		2.4		
O	70	1	Gib®	Gib2a	3.6	2.4	270	216
		2	Gib®	Gib2a	3.6	2.4	270	216
		3	Gib®	Gib1b	2.7	2.4	203	135
line totals		4		none		2.4		
W	743	5		none		2.4		
EQ	567	6		none		2.4		
P	70	1	Gib®	Gib1b	3.6	2.4	270	180
		2	Gib®	Gib1b	3.05	2.4	229	153
		3		none		2.4		
line totals		4		none		2.4		
W	499	5		none		2.4		
EQ	333	6		none		2.4		
Q	82	1	Gib®	Gib1a	1.8	2.4	99	90
		2	Gib®	Gib1a		2.4		
		3		none		2.4		
line totals		4		none		2.4		
W	99	5		none		2.4		
EQ	90	6		none		2.4		

							Wind	Earthq.
Totals Achieved							2198	1750
							OK	*OK*
Totals Required (from Sheet A)							2106	1204

27/02/2004

APPROVED
BY BUILDING
MARK FITZPATRICK
Officer

SPECIFICATION

Non Endorsed sheets of species have not been reproduced by Council, refer main set supplied by Architect if required to view.

1. PRELIMINARIES AND GENERAL

1.1 GENERAL

1.1.1 PARTIES TO THE WORK are: Homecreators Limited
1.1.2 Employer: 1.1.(.
1.1.3 Designer: Planmakers
Engineer:

1.1.2 SITE LOCATION and legal description are :
LOT: 5
DP: 319476
CT:

1.1.3 Workmanship and materials unless otherwise specified are to be in accordance with NZS 3604:1999 and the New Zealand Building Code.

1.2 DOCUMENTATION

1.2.1 NZ BUILDING CODE: This specification refers to BIA Approved Documents which comprise of the appropriate Building Code clause with the addition of Acceptable Solutions which are a means of compliance.

The following is a list of Approved Documents referred to in this specification. Other Approved Documents need to be complied with but are not necessarily listed below.

B1/AS1 Structure - general
B1/AS2 Structure - timber barriers
B1/AS4 Structure - foundations
B2/AS1 Durability
C1/AS1 Outbreak of fire
C2/AS1 Means of Escape
C3/AS1 Spread of fire
C4/AS1 Structure stability during fire
D1/AS1 Access routes
E1/AS1 Surface water
E2/AS1 External moisture
E3/AS1 Internal moisture
F2/AS1 Hazardous materials
F3/AS1 Hazardous substances & processes
F4/AS1 Safety from falling
F5/AS1 Construction and demolition hazards
F7/AS1 Warning systems
F8/AS1 Signs
G1/AS1 Personal hygiene
G4/AS1 Ventilation
G5/AS1 Interior environment
G6/AS1 Airborne and impact sound
G&/AS1 Natural light
G8/VM1 Artificial light
G9/VM1 Electricity
G10/AS1 Piped services
G12/AS1 Water supplies
G13AS1 Foul water - sanitary plumbing
G13/AS2 Foul water - drainage
H1/AS1 Energy efficiency

Provide Electrical Certification after completion and prior to Code Compliance Certificate being issued

1.2.2 STANDARDS This specification refers to New Zealand Standard Specifications.
The latest edition of the following documents apply.

Recessed Downlights shall be installed to prevent transfer of moisture into ceiling spaces and maintain minimum clearances from insulation as required by NZECP 54:2001.

7.2 SCHEDULE

7.2.1 INTERIOR All walls to be painted including cupboards, robes and garage. (See quotation to confirm)
7.2.2 INTERIOR WOODWORK to be painted.

8. PLUMBING AND DRAINAGE

8.1 REGULATIONS

All work must comply with NZS G12/AS1, GB/AS1 and AS2

8.2 MATERIALS

8.2.1 WATER MAINS Polybutylene
8.2.2 INTERNAL SERVICES Polybutylene
8.2.3 WASTE PIPES PVC
8.2.4 VENT PIPES AND SPOUTING PVC
8.2.5 DOWN PIPES AND SPOUTING PVC OR METAL (SEE QUOTATION TO CONFIRM)
8.2.7 STORMWATER DRAINS PVC
8.2.8 SEWER DRAINS PVC
8.2.9 GULLY TRAPS PVC

8.3 SCHEDULE

8.3.1 LAUNDRY
8.3.2 SHOWER
8.3.3 BATH
8.3.4 VANITY
8.3.5 WC
8.3.6 KITCHEN
8.3.7 CYLINDER
8.3.8 EXTERIOR TAPS

The above are addressed in the quotation.

APPROVED
BY P & D
Simon Copp
Officer
17/2/04

8.4 GAS SUPPLY

9. ELECTRICAL

9.1 REGULATIONS

All installations shall comply with NZBC G9/VM1.

9.2 SCHEDULE

CEILING OUTLETS
WALL OUTLETS
DOWN LIGHTS
SINGLE POWER POINTS
DOUBLE POWER POINTS
PHONE OUTLETS
TV OUTLETS

NOTE: No TV aerial or splitter.

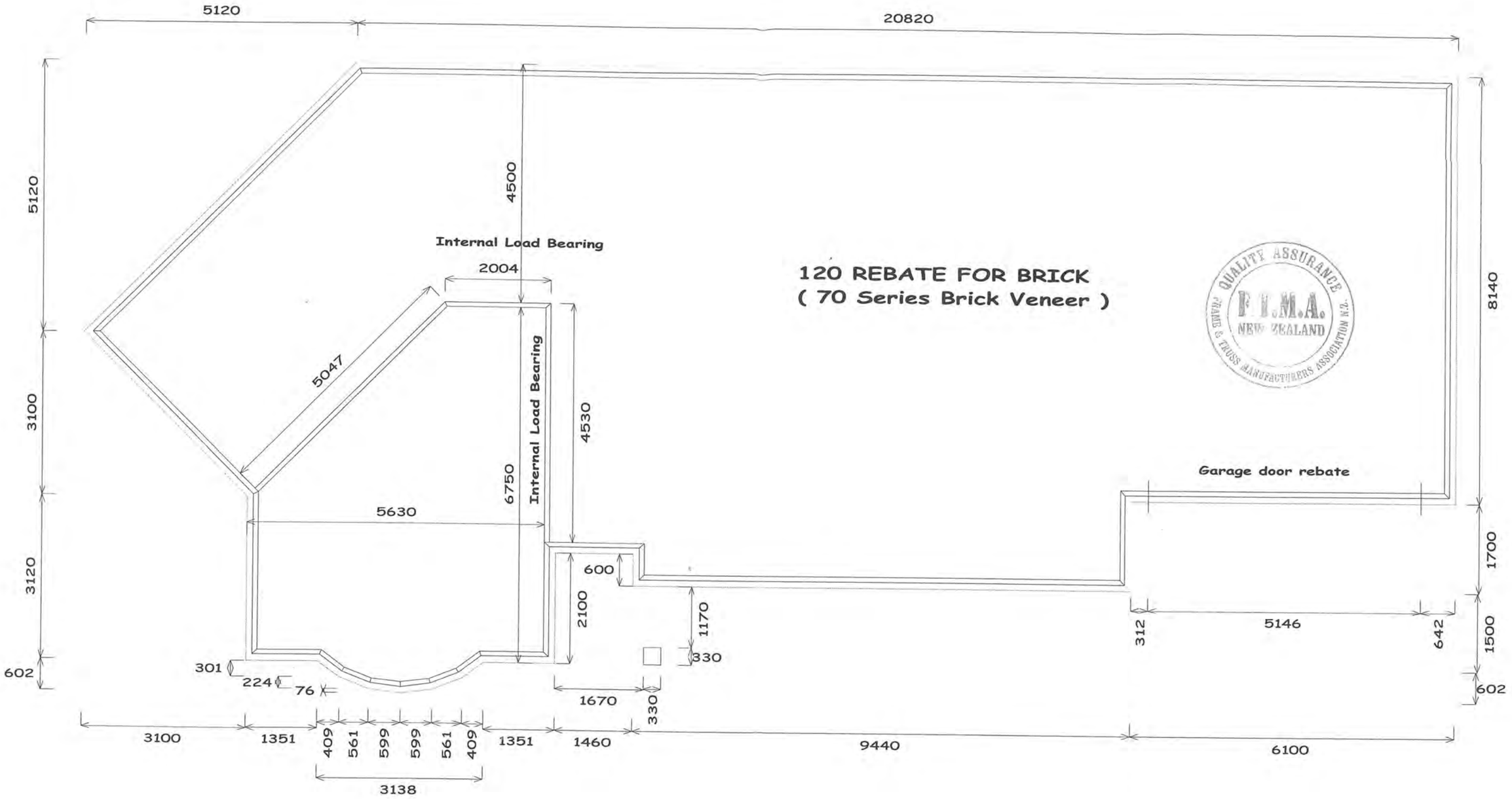

Job Details:

Wind Area:	Very High	Design Wind Speed:	50.0 m/s
TC Restraints:	400 mm	BC Restraints:	400 mm
Roof Material:	Metal Tiles	Ceiling Material:	Standard
Roof Live Load:	0.250 kPa		
Roof Pitch:	25.000 deg	Truss Centres:	900 mm

Piper and Phillips Industries Ltd

178 Kapiti Road
Paraparaumu
Wellington
New Zealand
Telephone: (04) 298-8567
Fax:

Name: Placemakers Paraparaumu
Address: Lot 5 Koromiko Glen
Waikanae

Telephone:

Job: 41020a

File location: C:\MiTek8\Jobs\41020\

Scale: 1 : 75 | Date: 24/03/2005 | Drawn By: Tamara Knight

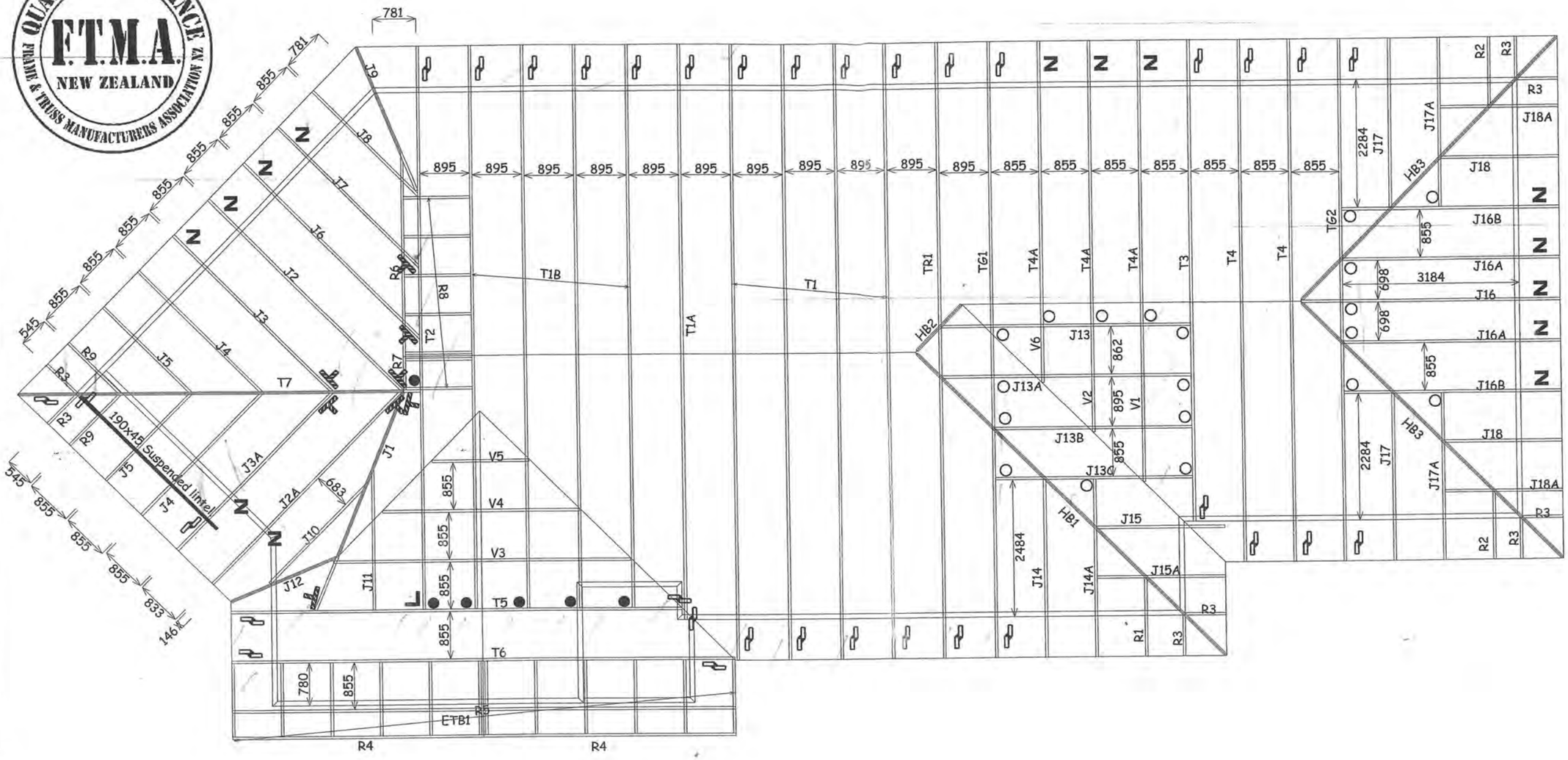

Between 3.0m & 5.0m use 1 pair "Z" nails.
Between 6.0m & 15.0m use 1 Pair CT200 (fill all holes)
All other situations use 2 / 100mm skew nails.

No. off		Fixing description
14 pairs	Z	"Z" nails (1 pair)
	□	JH37 x 90
	X	JH37 x 120
20	○	JH47 x 90
6	●	JH47 x 120
	◣	JH47 x 190
	◘	JH70 x 180
	◙	JH95 x 165
1	⌐	CPC 80
8	⌐	200x100x1mm Nail on plate.
	⌐	320x100x1mm Nail on plate.
	⌐	CPC 80
36 pairs	⌐	CT200 (pair)
	⌐	CT400 (cyclone ties)

Truss to Truss Fixings.

(In all other situations use 2 / 100mm skew nails)

○	JH37 x 90 Fill all holes with Product nails 30x3.15mm
X	JH37 x 120 Fill all holes with Product nails 30x3.15mm
□	JH47 x 90 Fill all holes with Product nails 30x3.15mm
●	JH47 x 120 Fill all holes with Product nails 30x3.15mm
◣	JH47 x 190 Fill all holes with Product nails 30x3.15mm
◘	JH70 x 180 Fill all holes with Product nails 30x3.15mm
◙	JH95 x 165 Fill all holes with Product nails 30x3.15mm
⌐	CPC 80 8 x Product nails 30x3.15mm / 4 x Type 17, 35mm screws
⌐	200x100x1mm Nail on plate. (fill all holes to within 10mm of the timber edge)
⌐	320x100x1mm Nail on plate. (fill all holes to within 10mm of the timber edge)

Truss to Top Plate Fixings.

⌐	CPC 80 Fill all holes with Product nails 30x3.15mm
⌐	CT200 (pair) Fill all holes with Product nails 30x3.15mm
⌐	CT400 (cyclone ties) 8 x Product nails 30x3.15mm / 4 x Type 17, 35mm screws
Z	"Z" nails (pair)

TRUSS LAYOUT FOR : HOMECREATORS, (PTT JOB)
LOT 5 KOROMIKO GLEN, PARAPARAUMU.

JOB # 41020

PIPER & PHILLIPS INDUSTRIES LTD.

Drawn by : Matt Taylor
PHONE (04) 298 8567 - FAX (04) 298 5488
E-MAIL Matt@piperandphillips.co.nz

Version	Issue Date

27/02/2004

3 HAZARD CLASSES AND TREATMENT REQUIREMENTS

3.1 Hazard classifications

Six hazard classes are described in this Standard. Each is denoted by a hazard number and is described in terms of service exposure and biological hazard as listed in table 3.1.

Table 3.1– Hazard classification

Hazard class	Exposure	Service conditions	Biological hazard	Typical uses
H1.1	Protected from the weather, above ground	Protected from the weather, always dry	Borers	Interior finishing timber – see NZS 3602
H1.2(1)	Protected from the weather, above ground, but with a possibility of exposure to moisture	Protected from the weather, but with a risk of moisture content conducive to decay	Borers, decay	Wall framing – see NZS 3602
H2	Protected from the weather, above ground	Protected from the weather, dry, exposed to ground atmosphere where well-ventilated but not in contact with the ground	Borers, termites	Framing timber in Australia
H3.1	Exposed to the weather, above ground	Periodic wetting, not in contact with the ground	Decay fungi and borers	Cladding, fascia, joinery – see NZS 3602
H3.2	Exposed to the weather, above ground, or protected from the weather but with a risk of moisture entrapment	Periodic wetting, not in contact with the ground, more critical end uses	Decay fungi and borers	All H3.1 uses, plus structural and decking – see NZS 3602
H4	Exposed to the weather, in ground or in fresh water	Ground contact, or conditions of severe or continuous wetting	Decay fungi and borers	Fence posts, landscaping timbers
H5	Exposed to the weather, in ground or in fresh water	Ground contact, or conditions of severe or continuous wetting, where uses are critical and where a higher level of protection than H4 is required	Decay fungi and borers	House piles and poles, crib walling
H6	Sea water or estuarine ground	Immersion in seawater or estuarine ground	Marine wood borers and decay	Marine timber and piles

NOTE –
(1) Sub-class H1.2 is often referred to as H1 Plus.

Table 5.2 – Colour coding for timber to be used as framing

Hazard class	Preservative	Colour(1)
H1.2	TBTO, TBTN or IPCB/permethrin	Blue(2)
	Boron	Pink(3)
H3.1	TBTO or TBTN	No added colour(4) or green(5)

NOTE –
(1) These colours shall not be used for any preservative types/hazard classes other than specified.
(2) The blue colour shall be a red-shade blue in order that it does not appear green with the natural yellow of timber (suggested colour – Pigment Blue 15.3).
(3) Colour – Red 112 (red) or Red 122 (pink).
(4) H3.1 framing shall be branded repetitively along the length at 1500 mm centres only, on its face or edge.
(5) If coloured green, the colour is to be distinctly different from the green of the H3.2 preservative treatment (colour – Green 368).

RECOMMENDED CONSTRUCTION METHOD
REFER TO "THE BRICK BOOK" FOR FURTHER DETAILS.

FIG. 2 FLAT SOFFIT

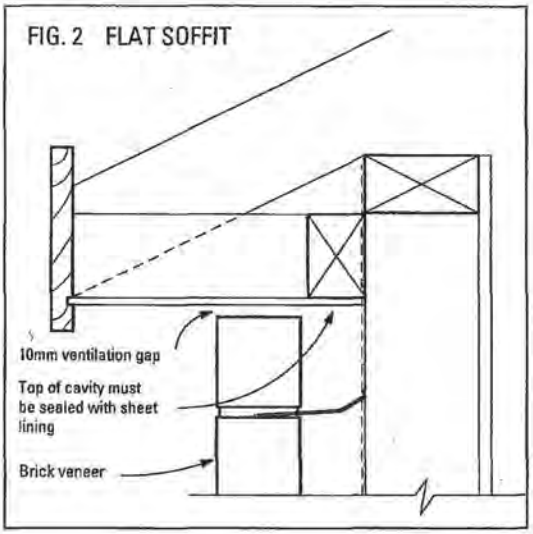

FIG. 3 FLAT SOFFIT WITH BRICK MOLD

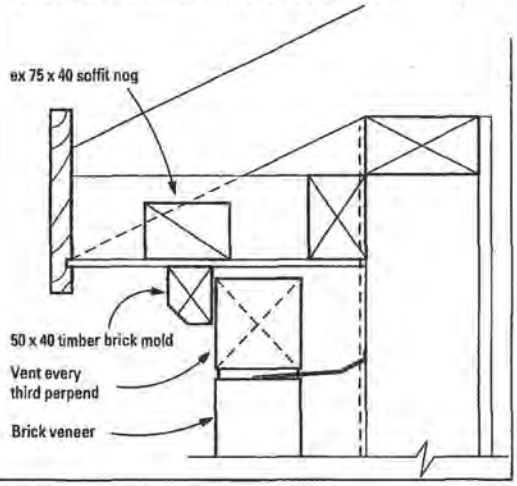

FIG. 6 OVERHANGING BRICK VENEER

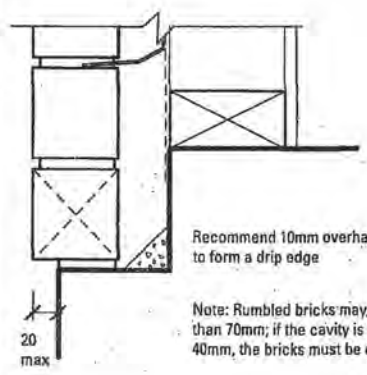

FIG. 10 TYPICAL WALL SECTION

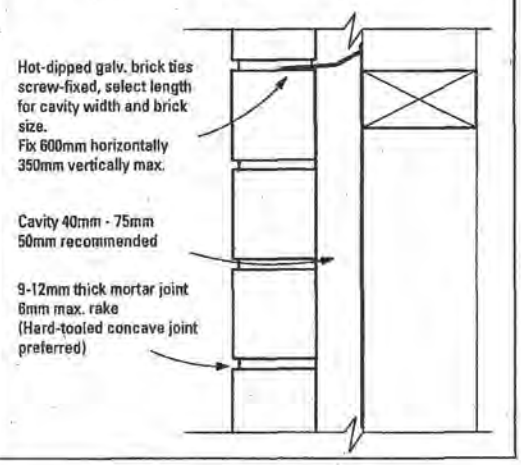

RECOMMENDED CONSTRUCTION METHOD
REFER TO "THE BRICK BOOK" FOR FURTHER DETAILS.

FIG. 37 WINDOW JAMB - Aluminium

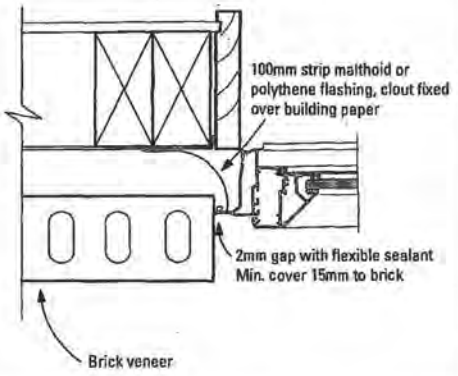

FIG. 38 WINDOW JAMB - Timber

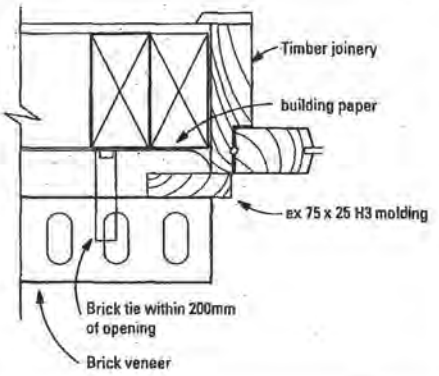

FIG. 39 WINDOW SILL - Aluminium

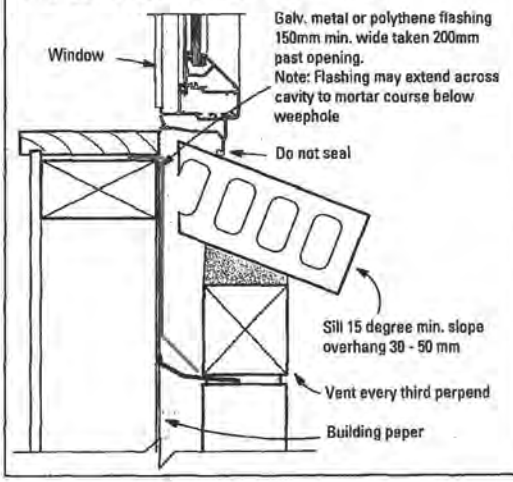

FIG. 40 WINDOW SILL - Timber

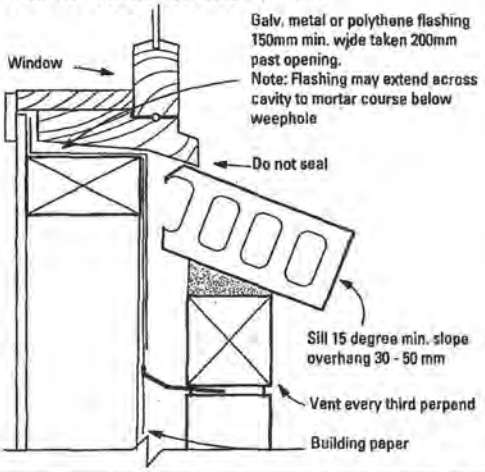

FIG. 41 DOOR JAMB - Aluminium

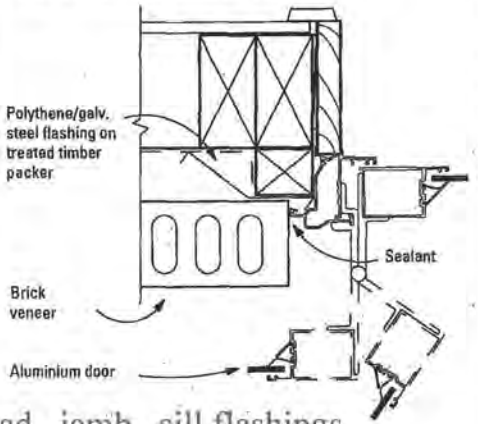

FIG. 42 BRICK DOOR SILL

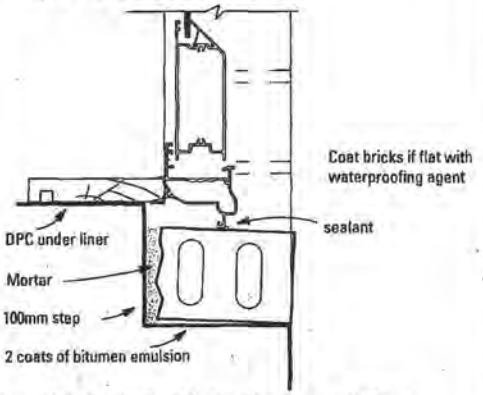

Note: If brick is to be sloped further either increase the depth of the step or reduce the thickness of the brick

Fit head , jamb , sill flashings
tray to external
joinery.Fit airseals to the inside
edges of the window reveals.

All junctions to claddings & other external m
protection areas, to have capillary gaps/breaks &
inseals where relevant, stopping wind driven
surface tension water.

Amd 1 Dec '00

Table 10.12 – Fixing types of roof trusses at supports (see 10.2.2.6)

Truss spacing (mm)	Fixing type											
	Light roofs								Heavy roofs			
	900				1200				900			
Wind zone	**L**	**M**	**H**	**VH**	**L**	**M**	**H**	**VH**	**L**	**M**	**H**	**VH**
Loaded dimension of support (m)												
3.0	C	C	C	D	C	B	C	D	A	A	C	C
3.5	C	C	C	D	C	C	D	E	A	A	C	C
4.0	C	C	C	D	C	C	D	E	A	C	C	C
4.5	C	C	D	E	C	C	D	F	A	C	C	D
5.0	C	C	D	E	C	C	E	F	A	C	C	D
5.5	C	C	D	E	C	C	E	F	A	C	C	D
6.0	C	C	D	F	C	D	E	F	A	C	C	D

Amd 1 Dec '00

Table 10.13 – Key to fixing types and capacity for rafters, roof trusses, underpurlins, ridge beams and strutting beams (see 10.2.2.6)

Fixing type	Fixing to resist uplift	Alternative fixing capacity
		(kN)
A	2/100 x 3.75 skewed nails	0.7
B	2/100 x 3.75 skewed nails + 1 wire dog	2.7
C	2/100 x 3.75 skewed nails + 2 wire dogs	4.7
D	2/100 x 3.75 skewed nails + 3 wire dogs	6.7
E	2/100 x 3.75 skewed nails + 4 wire dogs	8.7
F	2/100 x 3.75 skewed nails + U strap of 27 mm x 1.2 mm 10/30 x 3.15 nails at each end	16.0

10.2 Systems to resist vertical loads

10.2.1 *Framed roofs*

10.2.1.1 *Scope*

The scope of this clause is as follows:

(a) Clause 10.2.1 is written specifically for *couple-close roofs* (see figures 10.1 and 10.3), but the requirements for individual roof *framing* members apply equally to framed roofs of other types; for example, mono-pitch skillion and exposed *rafter* roofs.

(b) This clause does not include "cathedral ceiling" type roofs (see figure 10.3);

(c) The *rafter spacing* shall not exceed 1200 mm for *light roofs*, and 900 mm for *heavy roofs*.

Table 10.1 – Summary of roof bracing systems (see 10.1.4)

Roof type	Roof plane diagonal braces unless sarked (see 10.4)		Roof space diagonal braces*	Hip or valley rafters		Hip and top plate
Light hip	–	–	–	Minimum 3 per ridge	–	–
Heavy hip	One per 35 m^2 roof plane plan area	Plus	–	Minimum 3 per ridge	Plus	Top plate connected at 2.5 m maximum centres to wall bracing elements (see figure 10.22)
Light gable	One per 50 m^2 roof plane plan area	Or	At each end of ridge and maximum 7.5 m centres between	–	–	–
Heavy gable	One per 25 m^2 roof plane plan area, minimum 2 per plane	Plus	One per 12 m^2 roof plane plan area, parallel to ridge but not less than 2 m from a parallel external wall	–	–	–

* Sometimes known as ridge braces or gable braces.

NOTE –

(1) Roofs with hip and valley rafters shall have at least 3 hips or valleys connected to the ridge and top plates (refer to 10.3).

(2) Additional hip and valley rafters shall be counted as roof plane braces.

ELECTRICAL WORKERS REGISTRATION BOARD
Safety - Competency

Electrical Certificate of Compliance

for prescribed electrical work that is carried out on electrical installations and involves the placing or positioning or the replacing or repositioning of conductors (including fittings attached to those conductors).
To be completed whether or not an inspection is required.

No. 1798862

No. of attachments

CUSTOMER INFORMATION - PLEASE PRINT CLEARLY

Name of customer: HOMECREATORS

Phone:

Address of installation: LOT 5 KOROMIKO GLEN, WAIKAMAE

Postal address of customer (if not as above):

WORK DETAILS

No. of lighting outlets: 1 — No. of fittings: [illegible]

No. of socket outlets:

No. of water heaters:

Was any installation work carried out by the homeowner? Yes X No

Please tick (✓) as appropriate where work includes:

✓ Mains ✓ Main earthing system

✓ Switchboard Electric lines

Description: WIRING OF NEW HOME.
13 SD125 FIRE RATED D/L'S
22 BATTENHOLDERS
7 O/S BULKS 2 BATH HEATERS
1 230V SENSOR 2 VANITY LTS
23 D/H/P 2 H/T/R
12 S/H/P 2 MIRROR DEMIST
1 230V D/BELL 2 150mm S/FANS
1 O/S H/P

If necessary attach any pages with sketches of work done

It is recommended that test results be recorded here:

Visual Examination ✓
Earth Continuity ✓
Bonding ✓
Polarity ✓
Insulation Resistance _____ Mohm
Other _____

CERTIFICATION OF WORK

I certify that the above electrical work has been carried out in accordance with the requirements of the Electricity Act 1992 and Electricity Regulations 1997.

ELECTRICAL WORKER DETAILS

Name: BRENT O'HAGAN
Registration no.: E 333
Company: BRENT O'HAGAN ELECT
Signature: B.J. O'Hagan
Date: 4/4/05
Contact Ph No.: 0274489015

CERTIFICATION OF ELECTRIC LINES
(to be completed where a separate electrical worker has installed the electric line portion of the mains)

Name:
Registration no.:
Company:
Signature:
Date:
Contact Ph No.:

INSPECTION DETAILS Electrical work requiring inspection by a registered electrical inspector

✓ New mains ✓ Switchboard ✓ Earthing system X Installation work in hazardous areas

I certify that the inspection has been carried out in accordance with the requirements of regulation 41 of the Electricity Regulations 1997.

Name: AJ STELLINGWERF
Signature: [signature]
Registration no.: I2866
Date: 14-4-05.
Contact Ph No.:

This form is approved by the Electrical Workers Registration Board (PO Box 10-156, Wellington, Freephone 0800 66 1000) for the purposes of the Electricity Regulations 1997.

P. 01

PLUMBERS, GASFITTERS AND DRAINLAYERS BOARD

GASFITTING CERTIFICATION CERTIFICATE

(Pursuant to the Gas Act 1992 and the Gas Regulations 1993 and amendments)

ENERGY WORK CERTIFICATE

(Pursuant to the Building Act 1991)

Certificate No 367632

9th Floor, 70 The Terrace
PO Box 10655
WELLINGTON
Tel 04 494 2970
Fax 04 494 2975
website www.pgdb.co.nz

THIS CERTIFICATE IS NOT TRANSFERABLE

Installation address: (Box No's not acceptable)

Please complete in block letters

(Number) 5 (Street name) Koromiko Glen

(Suburb) Waikanae

(Town/City) Kapiti Coast

Consumer: (Title) (Initials) (Family/Business name) Homecreators LTD

Category

- ☒ Domestic
- ☐ Commercial
- ☐ Industrial
- ☐ Temporary
- ☐ Other

Type (Regulation 24(1))

- ☒ New
- ☐ Addition, ☐ Extension,
- ☐ Replacement
- ☐ Alteration
- ☐ Repair following accident

Gas Type ☒ NG ☐ LPG ☐ TLP ☐ Bio

Name of Gas Supplier Compass

Pipework Installed (attach pipework diagram) ☒ YES ☐ NO

DESCRIPTION OF GASFITTING TO WHICH THIS CERTIFICATE APPLIES

Qty	Type	Location	Make model	Input rate	Flue Type	Flue Location	Ventilation Type	Ventilation Location
1	Space heat	lounge	Rinnai [illegible]	35	MP in box	Thermal	complies	
1	"	Family	[illegible]	23	Power	Thermal	"	
1	Water heat	External	Rinnai 24	188	Power external		"	
1	Hob	Kitchen	Eye 4 burner	35	Unflued		"	

Test Results

10 min	Duration
7 kPa	Test pressure
0 kPa	Loss/gain
2.5 kPa	Working pressure

Other Testing

Combustion ☒ Yes ☐ No

Ventilation ☒ Yes ☐ No

Test Date 28/8/05

I certify that :-

- All appliances and fittings worked on by me or by persons working under my supervision are safe and that all work carried out was in accordance with all applicable requirements of the Gas Act 1992 and Gas Regulations 1993 as amended.
- The gasfitting to which this certificate applies does not make other parts [illegible]

Certificate Name [illegible]

Address [illegible]

Registration No 15044

Signature [signature]

Date 28/8/05

Name

Registration No

Certificate name

Registration No

On behalf of

Address

(If other than certifying gasfitter)

Fusiotherm®

Installation principles

Description of the installation

Address: 5 Kawmika Glen
Waikanae

Type of installation New House

Pipe-lengths:

16mm	84	m
20mm	40	m
25mm		m
32mm		m
40mm		m
50mm		m
63mm		m
75mm		m
90mm		m
110mm		m

Highest point: _____ m
(over manometer)

Time test started 4.00
Time test finished 4.25
Test Period 25 min

Client: Home Creations

Contractor: Bryant Plumbing

Date: 2-5-05

Preliminary test

(Testing procedureNZ Jan 2001)

Test Pressure 20 bar

1. Test pressure 20 bar 10 minutes
2. Unpressurise for 1 minute
3. Test pressure 20 bar 5 minutes
4. Unpressurise for 1 minute
5. Test pressure 20 bar 5 minutes
6. Unpressurise

Result preliminary test:

The test is to be conducted as a continuous test at 20 bar with the 5 steps noted above.

The system **MUST** be pressurised **THREE TIMES** with a minimun rest of one minute between re-pressurising

The test is complete and acceptable when the above has been undertaken and no leaks are present.

Finally complete all parts for the test sheet and return a copy to:

AQUATHERM NZ LTD
Fax 095707206
Newmarket
Auckland NZ

Signature/Stamp: _____ Reg Fusiotherm number: 2170

Aquatherm NZ Ltd must receive this information within 3 months of the installation for the warranty to be valid.

Please consult with your Council as they may require a copy of test results for their records.

aquatherm

aquatherm	fusiotherm	fusiolen
pipe system technology	pipe system	material PP-R (80)

Warranty

Aquatherm GmbH gives a 10-year guarantee on all plastic pipes and fittings produced by them. Within the scope of this guarantee Aquatherm GmbH will supply replacement material pipe and fittings if damages are traceable to materials faults and defects.

Furthermore within the scope of this guarantee Aquatherm GmbH compensates for material damage to third persons, for investigation,removal,acceptance,dismounting or laying bore of all defective goods.

Aquatherm GmbH guarantee is conditional on:-

* The fusion or joining of pipe and fittings using only Aquatherm GmbH welding tools and devices.
* Installation of pipe and fittings are certified Aquatherm installers and adherence to Aquatherm Gmbh technical rules and guidelines for correct installation principles.

Limits of Liability

* For bodily injury 5.000.000, Euro
* For property damage 2.500.000, Euro

(per occurrence)

Installation Address: 5 Koromiko Glen
Waikanae

Description of installation: New House

Name of Plumber: G Walton Signature: [signature]

Date of completion 2-5-05 Fusiotherm no. 2170

This warranty must be fully completed, signed and returned with the complete test sheet within three months of the completion of the project installation to the New Zealand Agent:- Aquatherm NZ Ltd, PO Box 99 393, NewMarket, Auckland. Ph 09 5707204 Fax 09 5707206

GERARD®
ROOFS

90 - 104 Felton Mathew Ave,
P.O. Box 18 071, Glen Innes,
Auckland, New Zealand
Freephone: 0800 104 868
Freefax: 0800 766 324
Email: info@gerardroofs.co.nz
Web: www.gerardroofs.co.nz

Name of Purchaser	**Homecreators**
Address Warranted	**Lot 5 Koromiko Glen** **Waikanae 6010**
Type of Warranty	
Installation Contractor	**Reliable Roofing Solutions Ltd**
Date of Warranty	**May 2005**
Brand	**Corona Shake Textured Deep Forest 3**

Warranty number
76850AZ
Purchase order No.
Koromiko

AHI Roofing is proud to provide you with the attached **Gerard Roofs ® Warranty.**

Our tiles are made from Zincalume coated steel, which is pressed prior to the application of an acrylic topcoat. This manufacturing system provides long term protection in the harshest of climates, including marine environments. This is why we are able to offer you fully backed 50-year pro rata **weatherproof** and 15-year pro rata **surface coating warranties**.

Most building materials require some servicing and maintenance during their product life and roofs are no exception. It is therefore important that you take the time to **read the attached warranty and maintenance guide** for your Gerard Roof.

In addition, please undertake the following actions **to validate your Gerard Roofs Warranty:**

- Please **complete the attached warranty card** and post back to Gerard Roofs.
- Please **input your name and address details** (in the space provided) in the upper left-hand corner, of the first page of your warranty.
- Please **file your warranty** in a safe place.

For more information about Gerard Roofs, suggested maintenance programs or your warranty please visit **www.gerardroofs.co.nz**.

Or alternatively you can call the Gerard Roofs Helpline on **0800 104 868** during office hours.

You can also contact us by fax, e-mail or via the internet.

Yours sincerely

Spouting + Fascia included in 10 years Roof Warranty

Max Goode
Customer Service Manager

BC 040 086

Placemakers Paraparaumu Ltd
A Member of Frame and Truss Manufactures Association NZ

PRODUCER STATEMENT

This producer statement is issued by Placemakers Paraparaumu Ltd

Name of Builder : Homecreators Ltd
Mitek Components:Ganglams, Trusses, Flitch Beams,Posistruts,

5

Job Address: Lot 5 Koromiko Glen Waikanae

our drawings

Building Consent No:

Job Reference: 41020 (PTT Job)

As a MITEK component fabricator accredited by MITEK NZ Ltd,

our design is based on standard designs selected from

the MITEK System Manual or MiTek 2100 or 20:20 Ver V4.4

Computer-Aided Design Program produced and certified by MITEK NZ Ltd

which have been prepared in accordance with NZS3603 and NZS4203

of the approved documents issued by the Building Industry Authority

in compliance with Clauses B1 and B2 of the New Zealand Building Code.

Designers Name : **G Piper** **Date :15-04-2005**

For and behalf of Placemakers Paraparaumu Ltd

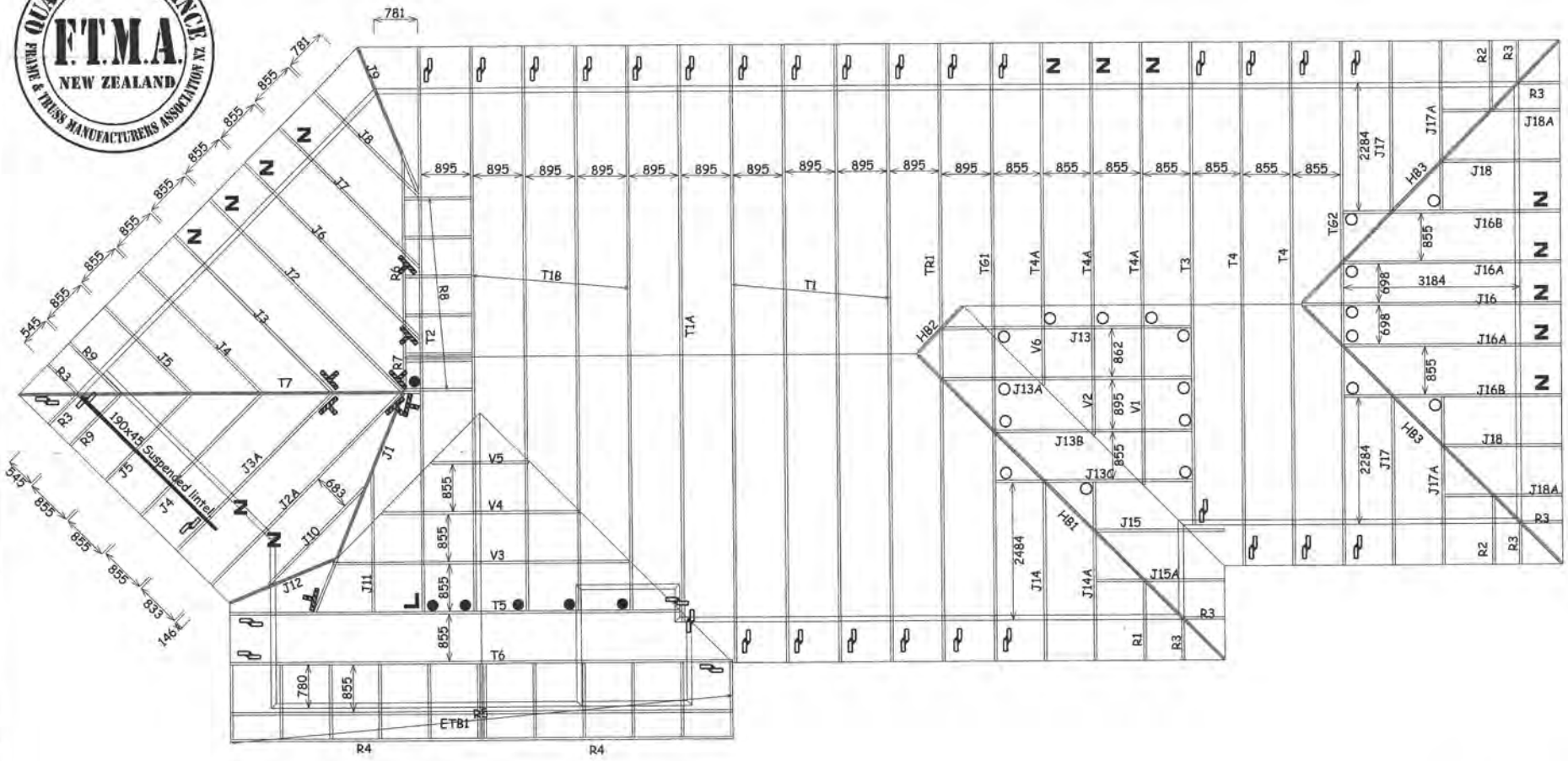

Between 3.0m & 5.0m use 1 pair "Z" nails.
Between 6.0m & 15.0m use 1 Pair CT200 (fill all holes)
All other situations use 2 / 100mm skew nails.

No. off		Fixing description
14 pairs	Z	"Z" nails (1 pair)
	□	JH37 x 90
	×	JH37 x 120
30	○	JH47 x 90
6	●	JH47 x 120
	◣	JH47 x 190
	◪	JH70 x 180
	◯	JH95 x 165
1	⌐	CPC 80
8	⊥	200x100x1mm Nail on plate.
	⊥	320x100x1mm Nail on plate.
	⌐	CPC 80
36 pairs	⌐	CT200 (pair)
	⌐	CT400 (cyclone ties)

Truss to Top Plate Fixings.

⌐	CPC 80 Fill all holes with Product nails 30x3.15mm
⌐	CT200 (pair) Fill all holes with Product nails 30x3.15mm
⌐	CT400 (cyclone ties) 8 x Product nails 30x3.15mm / 4 x Type 17, 35mm screws
Z	"Z" nails (pair)

Truss to Truss Fixings. (In all other situations use 2 / 100mm skew nails)

◪	JH70 x 180	Fill all holes with Product nails 30x3.15mm
◯	JH95 x 165	Fill all holes with Product nails 30x3.15mm
⌐	CPC 80	8 x Product nails 30x3.15mm / 4 x Type 17, 35mm screws
◢	200x100x1mm Nail on plate.	(fill all holes to within 10mm of the timber edge)
◢	320x100x1mm Nail on plate.	(fill all holes to within 10mm of the timber edge)

○	JH37 x 90	Fill all holes with Product nails 30x3.15mm
×	JH37 x 120	Fill all holes with Product nails 30x3.15mm
□	JH47 x 90	Fill all holes with Product nails 30x3.15mm
●	JH47 x 120	Fill all holes with Product nails 30x3.15mm
◣	JH47 x 190	Fill all holes with Product nails 30x3.15mm

TRUSS LAYOUT FOR : HOMECREATORS, (PTT JOB)
LOT 5 KOROMIKO GLEN, PARAPARAUMU.

JOB # 41020

PIPER & PHILLIPS INDUSTRIES LTD.

Drawn by : Matt Taylor
PHONE (04) 298 8567 - FAX (04) 298 5488
E-MAIL Matt@piperandphillips.co.nz

Version	Issue Date

Placemakers Paraparaumu Ltd

A Member of Frame and Truss Manufactures Association NZ

PRODUCER STATEMENT
FRAMING COMPONENT DESIGN

This producer statement is issued by Placemakers Paraparaumu Ltd to

Name of Builder Homecreators Ltd

Mitek : Components **Frames** to be built at

Job Address : Lot 5 Koromiko Glen waikanae

On Our Drawings ;

Building Consent No:

Job Reference Number : 41020 (PTT)

As a Mitek Component Fabricator Accredited By Mitek NZ Ltd:

our design is based on standard designs selected from

the Gang-Nail System Manual or MiTek 20/20 V4.4.

Computer-Aided Design Program produced and certified by Mitek NZ Ltd

which have been prepared in accordance with NZS3603 and NZS4203

of the approved documents issued by the Building Industry Authority

in compliance with Clauses B1 and B2 of the New Zealand Building Code.

Designers Name : T.Knight Date:14-04-2005

For and behalf of Placemakers Paraparaumu Ltd

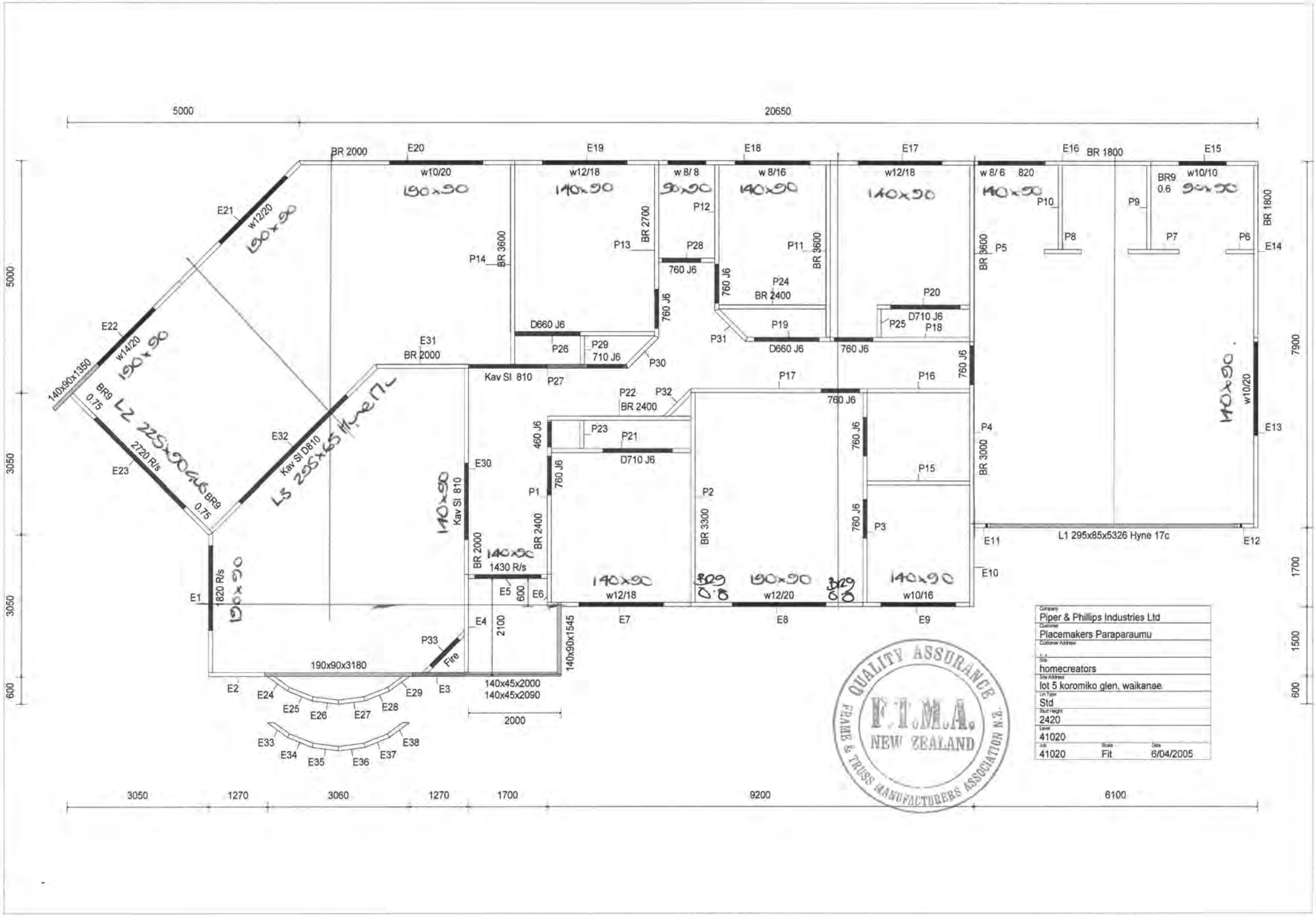
5000
20650
BR 2000
E20
E19
E18
E17
E16
BR 1800
E15
w10/20
w12/18
w 8/ 8
w 8/16
w12/18
w 8/ 6
820
BR9
0.6
w10/10
190x90
140x90
90x90
140x90
140x90
140x90
90x90
E21
w12/20
190x90
P12
P10
P9
BR 1800
P14
BR 3600
P13
BR 2700
P28
P11
BR 3600
P5
P8
P7
P6
E14
760 J6
760 J6
P24
BR 2400
P20
760 J6
D710 J6
P25
P18
E22
w14/20
190x90
D660 J6
P26
P29
710 J6
P30
P31
P19
D660 J6
760 J6
760 J6
E31
BR 2000
Kav Sl 810
P27
P17
P16
140x90
w10/20
140x90x1350
BR9
0.75
L2 225x90
P22
P32
BR 2400
760 J6
E32
Kav Sl D810
L3 295x65 Hyne 17c
460 J6
P23
P21
D710 J6
760 J6
P4
E13
2720 R/s
E23
BR9
0.75
E30
760 J6
P15
BR 3000
140x90
Kav Sl 810
P1
P2
BR 3300
760 J6
P3
BR 2400
BR 2000
140x90
1430 R/s
E11
L1 295x85x5326 Hyne 17c
E12
E10
1820 R/s
190x90
E1
E5
600
E6
140x90
w12/18
329
0.8
190x90
w12/20
329
0.8
140x90
w10/16
E7
E8
E9
E4
2100
140x90x1545
P33
Fire
190x90x3180
E2
E24
E25
E26
E27
E28
E29
E3
140x45x2000
140x45x2090
2000
E33
E34
E35
E36
E37
E38
5000
3050
3050
600
7900
1700
1500
600
3050
1270
3060
1270
1700
9200
6100
Company
Piper & Phillips Industries Ltd
Customer
Placemakers Paraparaumu
Customer Address
Site
homecreators
Site Address
lot 5 koromiko glen, waikanae
Lin Type
Std
Stud Height
2420
Level
41020
Job
41020
Scale
Fit
Date
6/04/2005
QUALITY ASSURANCE
F.T.M.A.
NEW ZEALAND
FRAME & TRUSS MANUFACTURERS ASSOCIATION N.Z.

Design-In-Hyne v3 NZ Origin® Wood Solutions Project Report

Job Number: 41020
Job Description: HomeCreators (PTT), Lot 5 Koromiko Glen, Waikanae
Run by: Placemakers Paraparaumu on 6/04/2005, at 11:13:51 a.m. Phone: (04) 2988567
Structural Timber Design in strict accordance with AS 1720.1-1997 and AS/NZS 1170.0 .. 1170.2-2002, AS/NZS 1170.3-2003, and modified to comply with requirements of NZS 4203-1992 where appropriate.

This project consists of the following design items:

L1(Garage Door Lintel) - 295x85 Origin® Hyne Beam17C by Hyne & Son Pty Ltd
TG Lintel: Single 5.146 m span, Trusses @ 0.9 m, RLW 4.685 m, Pitch 25 deg TG3050 Type 1, Sheet(20) roofing, P/Board(20) ceiling, VHigh wind

L2(Door to Family) - 225x90 Origin® GL8 Lintels by Origin® Wood Solutions
Lintel: Single 2.72 m span, Trusses @ 0.9 m, RLW 4.8 m, Pitch 25 deg, Sheet(20) roofing, P/Board(20) ceiling, VHigh wind

L3(Caviety Slider to Family) - 295x65 Origin® Hyne Beam17C by Hyne & Son Pty Ltd
TG Lintel: Single 3.25 m span, Trusses @ 0.9 m, RLW 4.685 m, Pitch 25 deg TG3600 Type 1, Sheet(20) roofing, P/Board(20) ceiling, VHigh wind

CERTIFICATION:
I hereby certify that above nominated section design have been designed applying the accepted principles of structural mechanics in accordance with the relevant building codes and industry standards as stated below:

AS/NZS 1170	Part 0: Structural design actions - General Principles 2002
	Part 1: Structural design actions - Permanent, imposed and other actions 2002
	Part 2: Structural design actions - Wind actions - 2002
	Part 3: Structural design actions - Snow loads - 2003
AS 1720	Timber Structures - Part 1: Design - 1997
NZS 4203	Loadings Standard - 1992
GLTAA	Industry recommendations from the GLTAA - "Unified Design Criteria"

The design actions, methods, assumptions and other criteria used in these structural designs are precedent upon AS1720.1-1997 and AS1170-2002, in preference to other Standards listed above. Deflection limits recommended in AS1684.1-1999 are standard to the program, but may be varied by the operator.

The nominated section sizes have been designed for the loading and dimensional data stated above. Origin® Wood Solutions and Hunt Robinson Pty Ltd cannot accept liability for loss or damage, either direct or consequential, arising from the use of these products in an application not consistent with the input data.

HUNT ROBINSON Consulting Engineers
Stephen J Hunt BE(Civil)
(MIEAust #368737), (NPER),
(RPEQ #3731)

Checked by: .....
for Placemakers Paraparaumu

Date Checked: 6 APRIL 05

Gib® Wall Bracing Calculation Sheet A — single storey — V1.2A

Job Details

Name	PTT
Street and Number	KOHOMIKO GLEN
Lot and DP Number	LOT 5 DP
City/Town/District	WAIKANAE
Designer and date	PLANMAKERS 27-01-04

Building Specification

Location of Storey	single
Floor Loading	2 kPa
Foundation Type	slab
Building Height to Apex (m)	6
Roof Height above Eaves (m)	3
Stud Height (m)	2.4
Cladding Weight (top or single)	heavy
Cladding Weight (lower)	light
Cladding Weight (subfloor)	light
Roof Weight	light
Roof Pitch (degrees)	0-25
Room in Roof Space	no
Building Length (m)	27
Building Width (m)	11.1
Gross Building Plan Area (m2)	231.5

not applicable (single storey building)

not applicable (slab)

Building Location

Wind Zone	***High***	**Earthquake Zone**
Region	R2	A
Terrain	Coastal	
Exposure	Sheltered	
Topography	Gentle	

Enter at least 'moderate' in a Lee Zone

Bracing Units required for Wind

per m	subfloor	walls
W along	n/a	78 BUs/m
W across	n/a	78 BUs/m
Totals	subfloor	walls
W along	n/a	866 BUs
W across	n/a	2106 BUs

Bracing Units required for Earthquake

per m2	subfloor	walls
E	n/a	5.2 BUs/m2
Totals	subfloor	walls
E along	n/a	1204 BUs
E across	n/a	1204 BUs

Gib® Wall Bracing Calculation Sheet B — single storey — V1.2A

Along								
Wall or Bracing Line		*Bracing Elements provided*					*Wind*	*Earthq.*
1	2	3	4	5	6	7	8W	9EQ
Line Label	Minimum BUs Req/Ach	Bracing Element No.	Supplier	Bracing Type	Element Length L (m)	Element Height H (m)	BUs Achieved	BUs Achieved
A	270	1	Gib®	Gib1a	1.95	2.4	107	98
		2	Gib®	Gib1a	1.8	2.4	99	90
		3	Gib®	BR9	0.6	2.4	66	57
line totals		4	Gib®	BR9	0.6	2.4	66	57
W	338	5		none		2.4		
EQ	302	6		none		2.4		
B	70	1	Gib®	Gib1a	1.95	2.4	107	98
		2	Gib®	Gib2a	2.3	2.4	173	138
		3	Gib®	Gib2b	2.8	2.4	224	196
line totals		4	Gib®	Gib1a	2.3	2.4	127	115
W	773	5	Gib®	Gib3	2.2	2.4	143	132
EQ	679	6		none		2.4		
C	230	1	Gib®	BR5	1.2	2.4	138	102
		2	Carter	sp4	0.45	2.4	32	38
		3	Carter	sp4	0.55	2.4	39	47
line totals		4	Gib®	BR9	0.8	2.4	88	76
W	384	5	Gib®	BR9	0.8	2.4	88	76
EQ	339	6		none		2.4		
D		1		none		2.4		
		2		none		2.4		
		3		none		2.4		
line totals		4		none		2.4		
W		5		none		2.4		
EQ		6		none		2.4		
E		1		none		2.4		
		2		none		2.4		
		3		none		2.4		
line totals		4		none		2.4		
W		5		none		2.4		
EQ		6		none		2.4		

							Wind	Earthq.
Totals Achieved							1496	1319
							OK	*OK*
Totals Required (from Sheet A)							866	1204

Gib® Wall Bracing Calculation Sheet B — single storey — V1.2A

Across								
Wall or Bracing Line		*Bracing Elements provided*					*Wind*	*Earthq.*
1	2	3	4	5	6	7	8W	9EQ
Line Label	Minimum BUs Req/Ach	Bracing Element No.	Supplier	Bracing Type	Element Length L (m)	Element Height H (m)	BUs Achieved	BUs Achieved
M	66	1	Gib®	BR4	0.9	2.4	90	77
		2	Gib®	BR9s	0.75	2.4	58	50
		3	Gib®	BR9s	0.75	2.4	58	50
line totals		4		none		2.4		
W	206	5		none		2.4		
EQ	176	6		none		2.4		
N	70	1	Gib®	Gib2b	3.6	2.4	288	252
		2	Gib®	Gib1a	2.35	2.4	129	118
		3	Gib®	Gib3	2	2.4	130	120
line totals		4	Gib®	Gib1a	1.9	2.4	105	95
W	652	5		none		2.4		
EQ	585	6		none		2.4		
O	70	1	Gib®	Gib2a	3.6	2.4	270	216
		2	Gib®	Gib2a	3.6	2.4	270	216
		3	Gib®	Gib1b	2.7	2.4	203	135
line totals		4		none		2.4		
W	743	5		none		2.4		
EQ	567	6		none		2.4		
P	70	1	Gib®	Gib1b	3.6	2.4	270	180
		2	Gib®	Gib1b	3.05	2.4	229	153
		3		none		2.4		
line totals		4		none		2.4		
W	499	5		none		2.4		
EQ	333	6		none		2.4		
Q	82	1	Gib®	Gib1a	1.8	2.4	99	90
		2	Gib®	Gib1a		2.4		
		3		none		2.4		
line totals		4		none		2.4		
W	99	5		none		2.4		
EQ	90	6		none		2.4		
							Wind	Earthq.
Totals Achieved							2198	1750
							OK	*OK*
Totals Required (from Sheet A)							2106	1204

SPECIFICATION

1. PRELIMINARIES AND GENERAL

1.1 GENERAL

1.1.1 PARTIES TO THE WORK are: Homecreators Limited

1.1.2 Employer: T.B.C.

1.1.3 Designer: Planmakers
Engineer:

1.1.2 SITE LOCATION and legal description are :
LOT: 5
DP: 319476
CT:

1.1.3 Workmanship and materials unless otherwise specified are to be in accordance with NZS 3604:1999 and the New Zealand Building Code.

1.2 DOCUMENTATION

1.2.1 NZ BUILDING CODE: This specification refers to BIA Approved Documents which comprise of the appropriate Building Code clause with the addition of Acceptable Solutions which are a means of compliance.

The following is a list of Approved Documents referred to in this specification. Other Approved Documents need to be complied with but are not necessarily listed below.

B1/AS1 Structure - general
B1/AS2 Structure - timber barriers
B1/AS4 Structure - foundations
B2/AS1 Durability
C1/AS1 Outbreak of fire
C2/AS1 Means of Escape
C3/AS1 Spread of fire
C4/AS1 Structure stability during fire
D1/AS1 Access routes
E1/AS1 Surface water
E2/AS1 External moisture
E3/AS1 Internal moisture
F2/AS1 Hazardous materials
F3/AS1 Hazardous substances & processes
F4/AS1 Safety from falling
F5/AS1 Construction and demolition hazards
F7/AS1 Warning systems
F8/AS1 Signs
G1/AS1 Personal hygiene
G4/AS1 Ventilation
G5/AS1 Interior environment
G6/AS1 Airborne and impact sound
G&/AS1 Natural light
G8/VM1 Artificial light
G9/VM1 Electricity
G10/AS1 Piped services
G12/AS1 Water supplies
G13AS1 Foul water - sanitary plumbing
G13/AS2 Foul water - drainage
H1/AS1 Energy efficiency

1.2.2 STANDARDS This specification refers to New Zealand Standard Specifications.
The latest edition of the following documents apply.

NZS 366	Clay building bricks
NZS 1158	Doors
NZS 1900	Model building by-law, parts 1 to 11
NZS 2295	Building papers, breather type
NZS 3101	Pt 1 Design of concrete structures
NZS 3102	Concrete masonry units
NZS 3103	Sands for mortars and internal and external renderings
NZS 3104	Concrete production, high grade
NZS 3108	Concrete production ordinary grade
NZS 3109	Concrete construction
NZS 3111	Methods of test for water and aggregate for concrete
NZS 3112	Method of test for concrete parts 1 to 4
NZS 3114	Concrete surface finishes
NZS 3117	Pigments for portland cement and portland cement products
NZS 3121	Water and aggregates for concrete
NZS 3122	Portland cement
NZS 3402	Steel bars for the reinforcement of concrete
NZS 3421	Steel wire for concrete reinforcement
NZS 3422	Welded fabric of drawn steel wire for concrete reinforcement
NZS 3503	Anodic oxide coating on aluminium external applications
NZS 3504	Aluminium windows
NZS 3602	Specifying timber and wood-base products for use in building
NZS 2603	Timber design
NZS 3604	Light timber frame buildings not requiring specific design
NZS 3606	Manufacture of glue-laminated timber
NZS 3608	Resin bonded wood chipboard
NZS 3601	Profiles of molding and joinery
NZS 3614	Manufacture of construction plywood
NZS 3615	Strength properties and design methods of construction plywood
NZS 3616	Finger jointer timber
NZS 3617	Profiles of weatherboards, fascia boards and flooring
NZS 3619	Timber windows
NZS 3631	NZ national timber grading rules
NZS 3640	Minimum requirements of NZ Preservation Council
NZS 4203	General structural design and loadings for buildings
NZS 4210	Masonry construction materials and workmanship
NZS 4211	Performance of windows
NZS 4218P	Minimum thermal insulation for residential buildings
NZS 4221	Fibrous plaster sheets
NZS 4223	Glazing in building, parts 1 and 2
NZS 4229	Concrete masonry buildings not requiring specific design
NZS 4230	Design of masonry structures
NZS 4251	Solid plastering
NZS 7703	Painting of buildings

1.3 OBLIGATIONS

1.3.1 COMPLY with the NZ Building Code and all statutory obligations and regulations of Territorial Authorities and Regulatory Bodies relating to the execution of the works.

1.3.2 BUILDING CONSENTS, FEES AND NOTICES: The Contractor shall obtain all Building Consents. Contractors shall give all notices as required by the NZ Building Code and Territorial Authorities and Regulatory Bodies.

1.3.3 SAFETY: Comply with all regulations applying to the safety, health and welfare of workers. Fence off, light or otherwise separate any source of danger on the site to people outside of work hours.

1.3.4 INSURANCES: The Contractor shall obtain a "Contractors All Risks:" policy to cover the works prior to construction commencing. The Contractor shall have their own Public Liability ($1,000,000.00 minimum) cover in place prior to commencing work to this project.

1.3.5 NUISANCE: Take all reasonable precautions to prevent damage and nuisance from water, fire, smoke, vehicle, dust, rubbish, noise and any other causes resulting from the construction of works.

1.4 MATERIALS AND WORKMANSHIP

1.4.1 MATERIALS: Unless otherwise stated all materials are to be bought new, the best quality of their respective kinds, and complying with the relevant NZS.

1.4.2 WORKMANSHIP: Conform to good trade practice and the relevant Codes of Practice in current use in NZ. All work is to be level, plump and true to line and face. Employ only experienced and competent work people.

1.4.3 Supply all labour, material, services, temporary works and equipment and plant required for the proper execution and completion of the works.

1.5 COMPLETION

1.5.1 GUARANTEES: obtain and provide all necessary guarantees required under this contract.

1.5.2 CODE COMPLIANCE CERTIFICATE: The Contractor is to notify the Local Authority on completion of the works and obtain the code of compliance certificate. A clear code of compliance certificate is a prerequisite of practical completion.

1.5.3 CLEAR AWAY: All trade debris from the site and leave the building clean and ready for occupation, with all services operating and mechanical parts in good working order. Remove all temporary markings, coverings and protective wrappings. Clean all glass inside and out.

2. CONCRETE

2.1 MATERIALS

2.1.1 CONCRETE to be Ordinary Grade 17.5 MPA / 20MPA / 25MPA. As stated in the quotation and specified in NZ3604 1999.

2.1.2 REINFORCING COVER
Foundation 50mm cover
Slab 35mm from top of slab
Elsewhere 50mm

2.1.3 DPC with approved materials in continuous layer under all ground floor slabs.

2.1.4 STEEL connectors exposed to weather shall be hot dip galvanized or stainless steel see plans.

2.1.5 WALLS BELOW GROUND to have 3 coats of Flintkote or similar approved.

3. STRUCTURAL STEEL

3.1 MATERIALS comply with grade 43A of BS 4360: 1972

4. CARPENTRY

4.1 MATERIALS

4.1.1 MATERIALS AND WORKMANSHIP shall comply with NZS 3604

4.1.2 PRESERVATIVES shall comply with NZS 3640

4.1.3 FRAMING TIMBER shall be gauged dry timber in long lengths:
Time Frame/Pre nailed frames by Piper and Phillips
90 x 35/45 Bottom Plate

90 x 35/45 Studs at 600/400 ctrs to exterior walls
90 x 35/45 Studs at 600/400 ctrs to interior walls
90 x 35/45 Dwangs at 800 ctrs
90 x 35/45 Top plates
See quotation to verify what has been allowed for.
150 x 40 Additional plates where required
75 x 40 Ceilings battens at 450 ctrs

Boundary joists same depth as floor joists by 25 or 45mm thickness.

4.1.4 ROOF FRAMING where required shall be of sizes indicated on drawings.

4.1.5 TRUSSES shall be by Gang-Nail NZ Limited or equal approved.

4.1.6 FINISHING TIMBER to exterior & interior to be machine dressed to thickness & width.

4.1.7 BUILDING PAPER from top of top plate to underside bearer or wall plates shall be breather type to NZS 2295. Laps to be 75mm. Replace or repair damaged paper.

4.1.8 SOFFITS to be 4.5mm Hardiflex with PVC joiners.

4.1.9 INTERIOR LININGS 10mm Gibraltar board or elephant board or similar.

4.1.10 INSULATION Ceiling insulation R2.4 - Wall insulation R1.8. Batts or similar approved blown products.

5. JOINERY

5.1 MATERIALS

5.1.1 INTERNAL DOORS hollow core, medium density particle board with hardboard face. Frames paint finish and rebate for linings. See quotation to verify.

5.1.2 SKIRTING AND CORNICE See quotation to confirm.

5.1.3 ALUMINIUM WINDOWS Power coated to NZS 3503 & NZS 3504. Owners choice of colour.

6. ROOFING

6.1 MATERIALS

6.1.1 ROOFING to be colour Tile or equal approved metal roofing tile with ridge, hips and barges matching. Colour to be approved by Owner.

6.1.2 FASCIA to be Klass or equal or 200mm x 25mm/150mm x 25mm pre primed finger jointed timber.

6.1.3 SEALANTS
Flashing flaps: BR606
Small joints: Uraflex
Large joints: Compressed bitumized foam.

7. PAINTING

7.1 MATERIALS

7.1.1 EXTERIOR WOODWORK primed unless oil finish with one good undercoat an done high gloss coat (enamel or acrylic) Sashes & doors enamel not acrylic.

7.1.2 HARDIFLEX SOFFITS 2 coats PVA latex paint.

7.1.3 HARDITEX to receive a sealer, base coat and top coat to sample panel.

7.2 SCHEDULE

7.2.1 INTERIOR All walls to be painted including cupboards, robes and garage. (See quotation to confirm)
7.2.2 INTERIOR WOODWORK to be painted.

8. PLUMBING AND DRAINAGE

8.1 REGULATIONS

All work must comply with NZS G12/AS1, GB/AS1 and AS2

8.2 MATERIALS

8.2.1 WATER MAINS Polybutylene
8.2.2 INTERNAL SERVICES Polybutylene
8.2.3 WASTE PIPES PVC
8.2.4 VENT PIPES AND SPOUTING PVC
8.2.5 DOWN PIPES AND SPOUTING PVC OR METAL (SEE QUOTATION TO CONFIRM)
8.2.7 STORMWATER DRAINS PVC
8.2.8 SEWER DRAINS PVC
8.2.9 GULLY TRAPS PVC

8.3 SCHEDULE

8.3.1 LAUNDRY
8.3.2 SHOWER
8.3.3 BATH
8.3.4 VANITY
8.3.5 WC
8.3.6 KITCHEN
8.3.7 CYLINDER
8.3.8 EXTERIOR TAPS

The above are addressed in the quotation.

8.4 GAS SUPPLY

9. ELECTRICAL

9.1 REGULATIONS

All installations shall comply with NZBC G9/VM1.

9.2 SCHEDULE

CEILING OUTLETS
WALL OUTLETS
DOWN LIGHTS
SINGLE POWER POINTS
DOUBLE POWER POINTS
PHONE OUTLETS
TV OUTLETS

NOTE: No TV aerial or splitter.

HAMISH WELLS LTD
CIVIL ENGINEERING
DESIGN & DRAFTING
PROJECT MANAGEMENT
LAND DEVELOPMENT
WASTE WATER TREATMENT

TMIPENZ

Hamish Wells

CIVIL ENGINEER

Phone 06-36-46728
Fax 06-36-46729
Mob. 0274-459-757
P O Box 188
215a Rangiuru Road
Otaki
engenr@xtra.co.nz

COPY FOR YOUR INFORMATION

The Chief Building Inspector
Kapiti Coast District Council
Private Bag
Paraparaumu

Attention: ***Leon Smith***

PROPOSED DWELLING 5 KOROMIKO GLEN – WAIKANAE – SITE INVESTIGATION FOR THE CONSTRUCTION OF LIGHT TIMBER FRAMED BUILDINGS IN ACCORDANCE WITH NZS 3604:1999

Site Description:	
Lot number	*Lot 5, DP319476*
Topography	*Flat*
Existing Ground cover	*Grass*
Soil type	*Sandy loam over gravels*

Further investigation of prepared site, has indicated an area of rapid transition from standard foundation, to a depth of 1600mm below EGL.

Drilled piles to 1600mm below EGL (100kpa reliable) will be required within the area as marked on the plan. Remaining foundation is standard, as per architects plan. This site has been inspected prior to "pouring".

Should you require any further information please contact me directly.

Yours faithfully,

H. T. Wells

Hamish Wells
TMIPENZ
06.04.05

FOUNDATION DETAIL

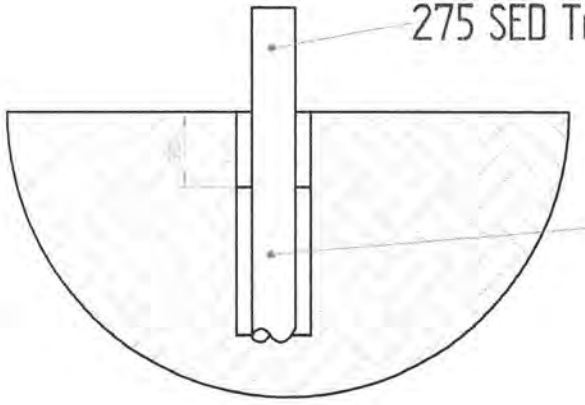

Piles to 1600mm below EGL
(100kpa reliable)set in concrete.
Remaining foundation as per
architects plan.

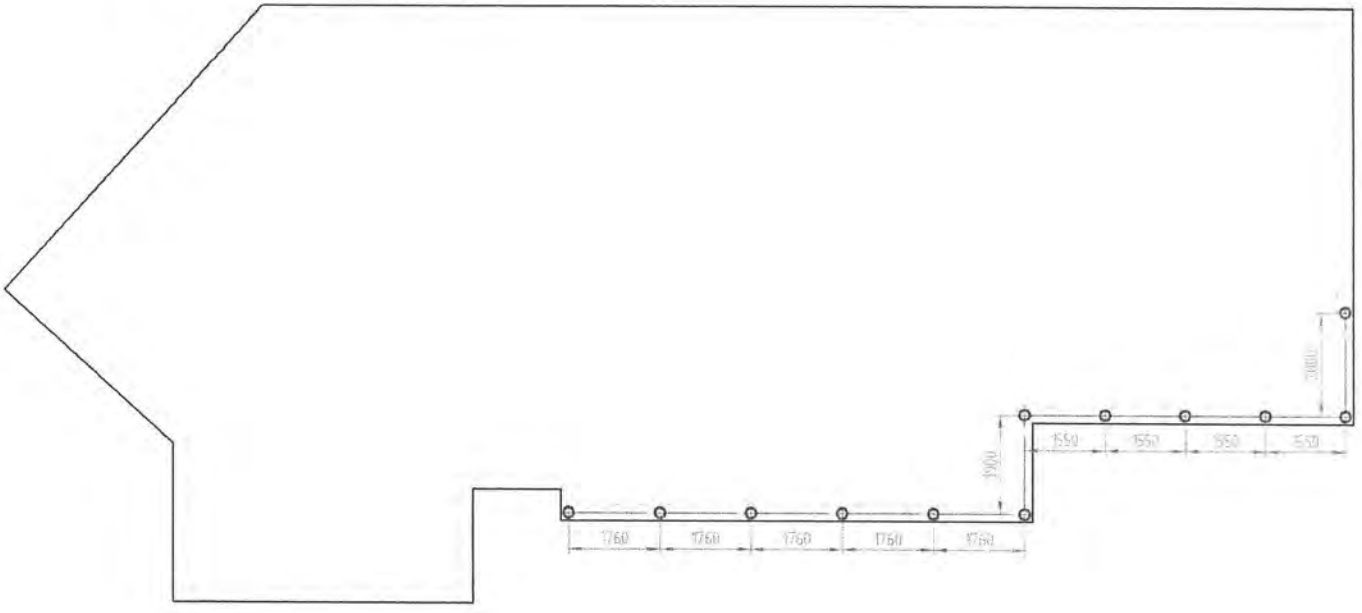

TMIPENZ
Hamish Wells
CIVIL ENGINEERING CONSULTANT
Offices at 215a Rangiuru Road Otaki

P O Box 188 Otaki
engenr@xtra.co.nz
025-459-757 mob.
06-36 46728 wk
06-36 46729 fax

HOMECREATORS - LOT 5 - KOROMIKO GLEN - WAIKANAE

DRAWING SCALE	1:100 @ A3 SIZE
DATED	6 APRIL '05
SHEET	FND DET OF
JOB NO.	

7.5.4.3
The *damp-proof membrane* (*DPM*) shall abut any *damp-proof course* (*DPC*) used to protect timber in accordance with 2.3.3, or the *DPM* may extend to act as a *DPC* provided it is of suitable impervious material.

7.5.4.4
Damp-proof membrane materials shall be repaired or replaced as necessary, immediately before concrete is placed over them.

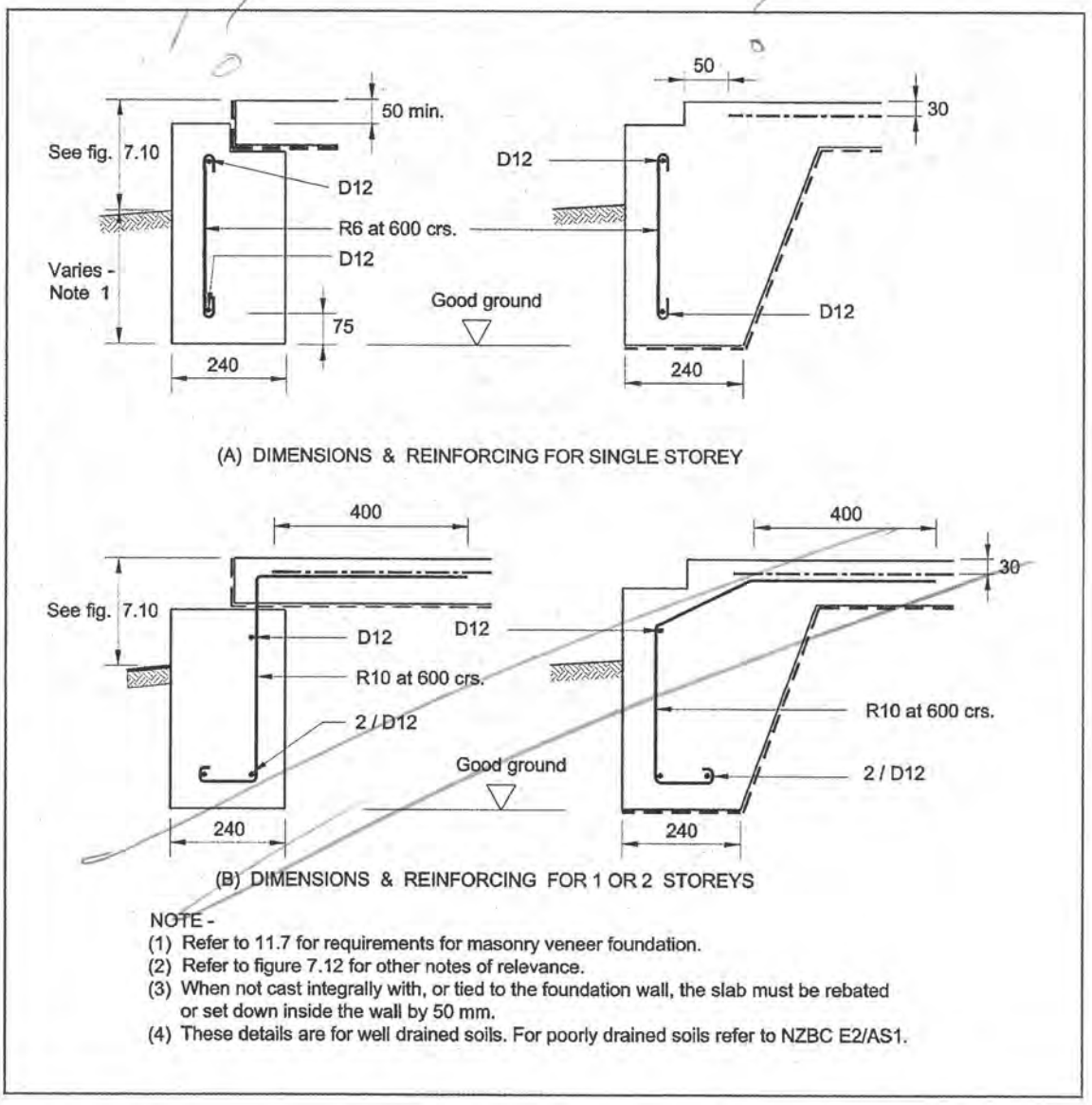

NOTE -
(1) Refer to 11.7 for requirements for masonry veneer foundation.
(2) Refer to figure 7.12 for other notes of relevance.
(3) When not cast integrally with, or tied to the foundation wall, the slab must be rebated or set down inside the wall by 50 mm.
(4) These details are for well drained soils. For poorly drained soils refer to NZBC E2/AS1.

Figure 7.14 – Masonry veneer foundation edge details –*In situ* concrete (see 7.5.2.3 and 11.7)

14 Tongariro Street, Paraparaumu
Tel: 04 297 1685 Fax: 04 297 1627

Ben Smithson cell: 027 244 3294

ben@homecreators.co.nz
www.homecreators.co.nz

To: Leon Smith

From: Ben Smithson Date: 1/9/05

Fax No: _____ No. of pages (incl cover): 1+ _____

RE: Safety stamp for shower doors - 5 Koromiko Glen Waikanae

Re - Code of Compliance -

Cheers Ben.

SEP 2005 KAPITI COAST DISTRICT COUNCIL

Thanks, Ben

DOLPHIN
SHOWERS & TILES

31 August 2005

Homecreators Limited
14 Tongariro Street
Paraparaumu

Attention: Ben Smithson

Dear Ben

Shower Doors – Lot # 5 Koromiko Glen

This note is to advise that the shower doors utilized at above address are indeed toughened safety glass

The lack of 'stamp' would suggest a system failure at Pilkington Glass factory

Yours faithfully
Dolphin Shower Screens Limited

Laurie Smaling

PO Box 111 Paraparaumu Phone/Fax 04 298 9937 Email: dolphin.showers@paradise.net.nz

KAPITI COAST DISTRICT COUNCIL

PROJECT INFORMATION MEMORANDUM - BC 040086

Application Details

Applicant Name :	PTT
Contact Address :	12 Tongariro St Paraparaumu 6010
Location :	5 KOROMIKO GLEN, WAIKANAE
Legal Description :	Zone Residential Status history Deadline 16/02/04
Proposal :	New dwelling.

Application Details

Use Permitted :	Permitted activity
Resource consent granted :	Yes - RM000002
Designations on property :	None listed
Easements :	Right of way, services
Site subject to inundation :	Not known to be
Relocatable zone :	N/A
Coastal building line restriction :	N/A
Minimum floor level (50 year event) :	N/A
Floor level (100 year event) :	N/A
Yard and height requirements :	Comply
Tree/building preservation :	None listed

Comments

Consent notices, covenants and like listings registered on the title are the responsibility of the applicant. Search this property title for any impediments to this proposal.

All work to be carried out in accordance with Resource Consent RM000002.

Note: Minimum floor levels must use Mean Sea Level Wellington Datum 1953. Certification that the floor level complies with the minimum floor level will be required from a registered surveyor prior to foundation inspection.

Special Features of the Land

Potential erosion :	no
Potential avulsion :	no
Potential subsidence :	no
Potential slippage :	no
Potential alluvion :	no
Potential inundation :	no
Presence of hazardous contaminants :	none known

Other features

Plumbing and Drainage Details

Sewer available / connected :	Available
Water available / connected :	Available
Site plan of existing services :	Not supplied
Location of sewer lateral :	shown
Location and size of water toby :	shown
Location of public drains (if any) :	N/A
Location of easments (if any) :	see Planners comments
Stormwater disposal to :	Soak pits

Plumbing and drainage notes

KAPITI COAST
DISTRICT COUNCIL

Project Information Memorandum

Section 31, Building Act 1991

Application

PTT	No.	040086
12 Tongariro St	Issue date	4/03/04
Paraparaumu 6010	Application date	30/01/04

Project

Description	New Construction
	Being Stage 1 of an intended 1 Stages
	New dwelling.
Intended Life	Indefinite, but not less than 50 years
Intended Use	Residential.
Estimated Value	$220,000
Location	5 KOROMIKO GLEN, WAIKANAE
Legal Description	
Valuation No.	1494143504

This project information memorandum is confirmation that the proposed building work may be undertaken, subject to the provisions of the Building Act 1991, and any requirements of the building consent.

This project information memorandum includes:

___ Information identifying relevant special features of the land concerned

___ Details of relevant utility systems

___ Details of authorisations which have been granted

Signed for and on behalf of the Council:

Name: Kapiti Coast District Council **Date:** 4-3-04

Lot 5

5 Koromiko Glen

KAPITI COAST DISTRICT COUNCIL

CONSENT NOTICE PURSUANT TO SECTION 221

OF THE RESOURCE MANAGEMENT ACT 1991

IN THE MATTER OF LAND TRANSFER PLAN 319476 AND RESOURCE CONSENT NO. RM 000002

BEING THE SUBDIVISION OF LOT 2 DP 89880,

AT 6 & 8 KOROMIKO ROAD, WAIKANAE

FOR ERIKA BELLIS

The Regional Regulatory Titles Officer at Wellington

PURSUANT to Section 221 of the Resource Management Act 1991 the Kapiti Coast District Council hereby gives notice that it has consented to the subdivision and with respect to **Lots 1 to 6 inclusive**, the following condition is to be complied with on a continuing basis:

Specific foundation design by a Registered Engineer may be required for any new dwelling or additions and alterations to a dwelling in accordance with the recommendations within the soil test report for 6–8 Koromiko Road prepared by Hamish Wells, Civil Engineer, entitled *"6-8 Koromiko Road – Lots 1-6 of subdivision of Lot 2 DP89880 – site soil tests for individual lots"* and dated 19-5-03 and submitted to Council in relation to application No. RM000002, a copy of which is available in Council's office at any time the office is open to the public.

Issued in respect of application No. RM000002 on this **24th** day of **June, 2003.**

Wayne Gair
AUTHORISED OFFICER

Matthew Muspratt
AUTHORISED OFFICER

Kapiti Coast District Council
Phone (04) 904 5700, Fax (04) 904 5830 175 Rimu Road, Private Bag 601, Paraparaumu. Website www.kcdc.govt.nz

Lot 5 Koromiko Glen
BC 040086.

COMPUTER FREEHOLD REGISTER UNDER LAND TRANSFER ACT 1952

Search Copy

R.W. Muir
Registrar-General of Land

Identifier	**WN57D/247**
Land Registration District	**Wellington**
Date Issued	07 February 2001

Prior References
WN568/135 WN572/204

Estate	Fee Simple
Area	603 square metres more or less
Legal Description	Lot 5 Deposited Plan 90203

Proprietors
Michael Birrell Carruthers and Gibson Sheat Trustees Limited

Interests

Fencing Agreement in Transfer 105750 (affects part formerly in CT WN572/204)

Fencing Agreement in Transfer 213873 (affects part formerly in CT WN572/204)

B820963.3 Consent Notice pursuant to Section 221(1) Resource Management Act 1991 - 7.2.2001 at 1.30 pm

Appurtenant hereto are rights of way and rights to sewage & stormwater drainage, water, electricity, gas and telecommunications specified in Easement Certificate B820963.6 - 7.2.2001 at 1.30 pm

Subject to a right of way and rights to sewage and stormwater drainage, water, electricity, gas and telecommunications over parts marked D,I and N on DP 90203 specified in Easement Certificate B820963.6 - 7.2.2001 at 1.30 pm

The easements specified in Easement Certificate B820963.6 are subject to Section 243 (a) Resource Management Act 1991

Subject to a right to sewage drainage (in gross) over parts marked I and G on DP 90203 in favour of The Kapiti Coast District Council created by Transfer B820963.8 - 7.2.2001 at 1.30 pm

The easements created by Transfer B820963.8 are subject to Section 243 (a) Resource Management Act 1991

Land Covenant in Transfer B820963.9 - 7.2.2001 at 1.30 pm

5622645.3 Mortgage to Bank of New Zealand - 16.6.2003 at 9:00 am

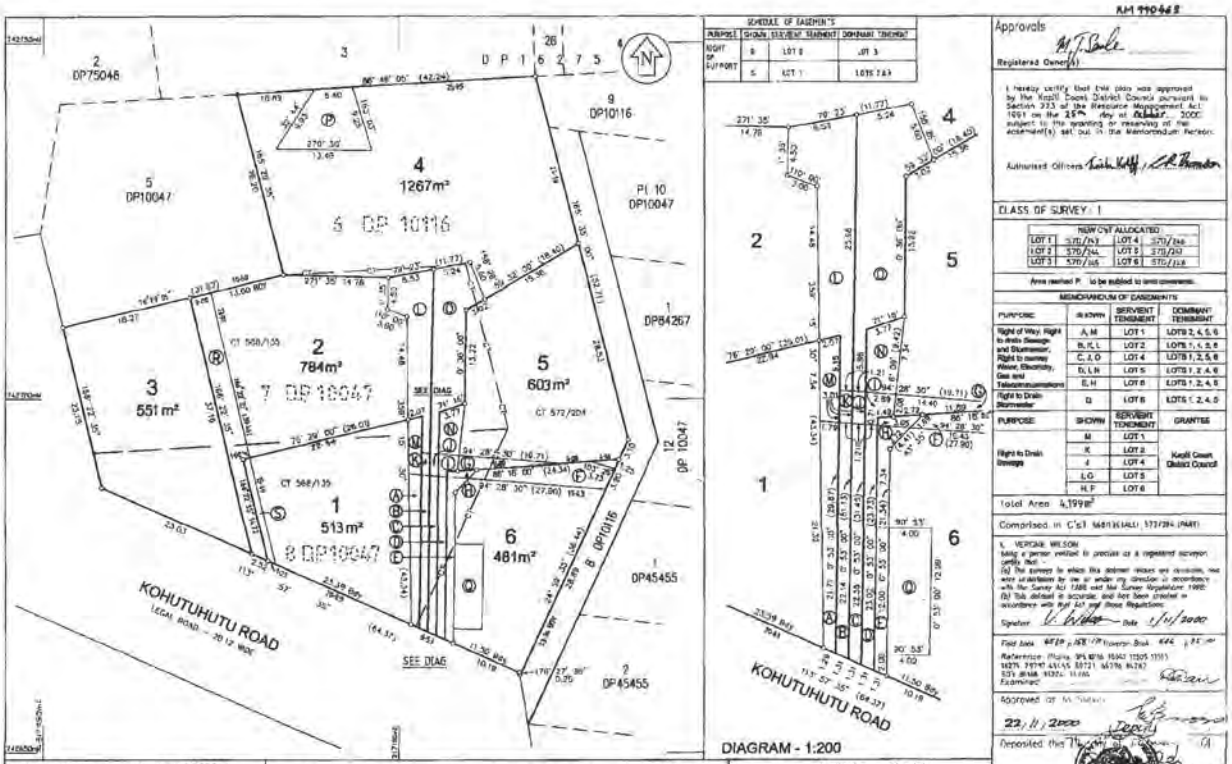
DP 16275
2 DP75046
3
26
4
9 DP10116
5 DP10047
4 1267m²
6 DP 10116
Pt 10 DP10047
1 DP84267
2 784m²
7 DP10047
3 551m²
5 603m²
CT 568/155
CT 572/204
1 513m²
8 DP10047
6 481m²
12 DP 10047
B DP10116
1 DP45455
2 DP45455
KOHUTUHUTU ROAD
LEGAL ROAD — 20.12 WIDE
SEE DIAG
SCHEDULE OF EASEMENTS
PURPOSE | SHOWN | SERVIENT TENEMENT | DOMINANT TENEMENT
RIGHT OF SUPPORT | B | LOT 6 | LOT 3
S | LOT 1 | LOTS 7 & 8
DIAGRAM - 1:200
KOHUTUHUTU ROAD
Approvals
Registered Owner(s)
I hereby certify that this plan was approved by the Kapiti Coast District Council pursuant to Section 223 of the Resource Management Act 1991 on the 25th day of October 2000 subject to the granting or reserving of the easement(s) set out in the Memorandum Hereon.
Authorised Officers
CLASS OF SURVEY: 1
NEW CT ALLOCATED
LOT 1 570/161 LOT 4 570/166
LOT 2 570/162 LOT 5 570/167
LOT 3 570/165 LOT 6 570/168
Area marked P to be added to land concerned.
MEMORANDUM OF EASEMENTS
PURPOSE | SHOWN | SERVIENT TENEMENT | DOMINANT TENEMENT
Right of Way, Right to Drain Sewage and Stormwater, Right to convey Water, Electricity, Gas and Telecommunications | A, M | LOT 1 | LOTS 2, 4, 5, 6
B, K, L | LOT 2 | LOTS 1, 4, 5, 6
C, J, O | LOT 4 | LOTS 1, 2, 5, 6
D, I, N | LOT 5 | LOTS 1, 2, 4, 6
E, H | LOT 6 | LOTS 1, 2, 4, 5
Right to Drain Stormwater | G | LOT 6 | LOTS 1, 2, 4, 5
PURPOSE | SHOWN | SERVIENT TENEMENT | GRANTEE
Right to Drain Sewage | M | LOT 1 | Kapiti Coast District Council
K | LOT 2
J | LOT 4
I, O | LOT 5
H, P | LOT 6
Total Area 4.199m²
Comprised in C/ts 568/155 (PART) 572/204 (PART)
I, VERNON WILSON being a person entitled to practise as a registered surveyor hereby certify that:-
(a) The survey to which this dataset relates was undertaken by me or under my direction in accordance with the Survey Act 1986 and the Survey Regulations 1992.
(b) This dataset is accurate, and has been created in accordance with that Act and those Regulations.
Signature Date 1/11/2000
Field book 6619 p 158 Traverse Book 644 p 35-40
Reference: Plans 394 8716 15042 12505 13593 14274 39747 44455 39721 46396 46747 531 droids 15225, 15166
Examined
Approved as to Survey 22/11/2000
Deposited this 7th day of December 2000
Land Registrar
File 704.07
Received as to fee and instructions
200203
LAND DISTRICT WELLINGTON
Survey Blk & Dist I, Paekakariki
NZMS 261 Sht R26 Record Map No. SDI
LOTS 1 - 6 BEING A SUBDIVISION OF LOT 6 DP10116 AND LOTS 7 & 8 DP10047
Local Authority Kapiti Coast District
Surveyed by LATTEY CONSULTANTS LTD
Scale 1 : 300 Date September 2000

Council owns most of the manholes, pipes, connections etc shown on this plan including where they cross private property. It is illegal to interfere with any of Council services.

Council services terminate at, or close to, the property boundary and include, tobies, water meters, manifolds or other fittings for water supply or an inspection chamber for a sewerage connection.

The information on this/these document(s) or plan(s)has been derived and compiled from various sources and is intended to assist in minimising any damage to plant or utilities.

Please be aware if any damage to KCDC plant (pipework and fittings etc) or utilities is caused you may be liable for any resultant loss or damage.

Information given is generally subject to reasonable tolerance and precise accuracy cannot be guaranteed, therefore, positioning of plant and utilities should be verified by you on site before any excavations commence.

Contact Council if in any doubt.

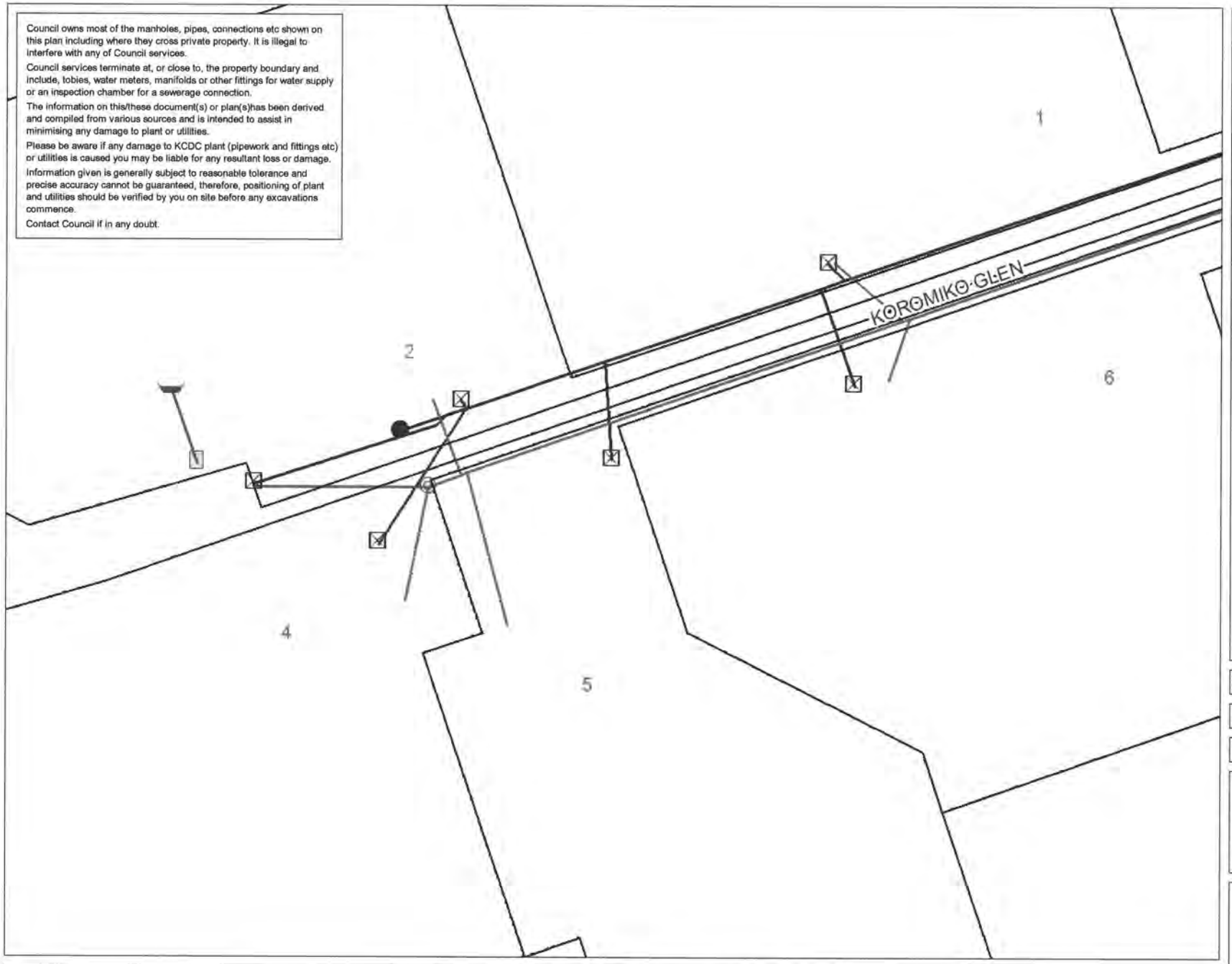

LEGEND

NORTH

- Sewer Pump
- Sewer Manhole
- Stormwater Soak Hole
- Stormwater Pump
- Stormwater Manhole
- Stormwater Sump
- Stormwater Outlet
- Stormwater Inlet
- Water Hydrant
- Water Valve
- Water Toby
- Sewer Rising Main
- Sewer Pipe
- Stormwater Pipe
- Stormwater Rising Main
- Water Pipe

Map Drawn Date: 17/02/2004 By PC96

Scale: A4 1:260

Date of Aerial Photography:

Cadastral information derived from Land Information New Zealand. Crown Copyright reserved. Approved for internal reproduction by Kapiti Coast District Council. Boundary accuracy is variable.

KAPITI COAST DISTRICT COUNCIL

SERVICE NETWORK

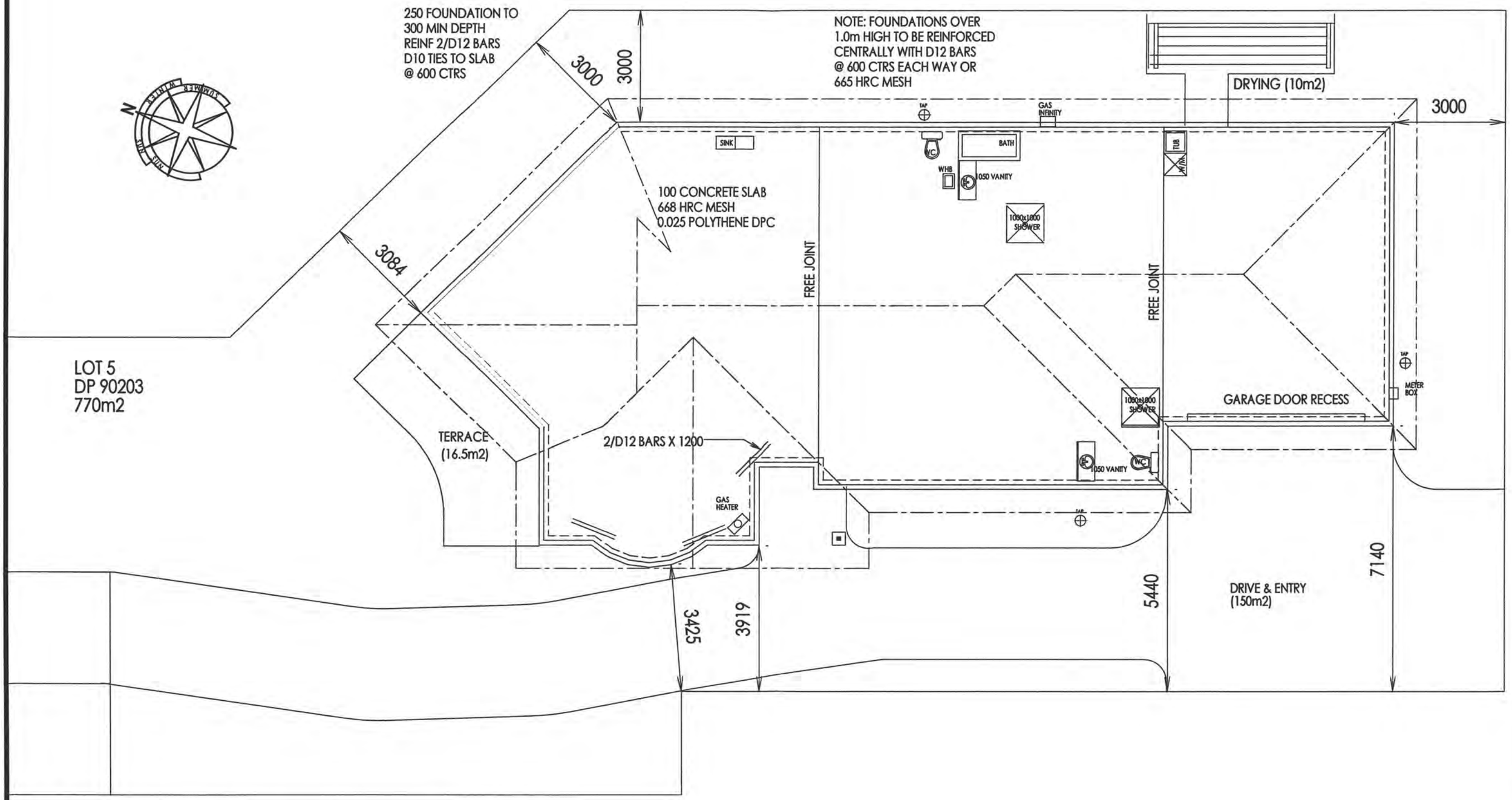

SITE, FOUNDATIONS & DRAINAGE PLAN 1:100

PROPOSED DWELLING FOR PTT - LOT 5 - KOROMIKO GLEN - WAIKANAE - BY HOMECREATORS

PLANMAKERS DRAUGHTING & DESIGN (1991) LTD
P.O.BOX 1502 PARAPARAUMU BEACH

RAY WILSON nzcd (arch) mnzid
PHONE (04)9026081 FAX (04)9026082
EMAIL planmakers@paradise.net.nz

DRAWING	ISSUE NO
3	27/1/04

Council owns most of the manholes, pipes, connections etc shown on this plan including where they cross private property. It is illegal to interfere with any of Council services.

Council services terminate at, or close to, the property boundary and include, tobies, water meters, manifolds or other fittings for water supply or an inspection chamber for a sewerage connection.

The information on this/these document(s) or plan(s)has been derived and compiled from various sources and is intended to assist in minimising any damage to plant or utilities.

Please be aware if any damage to KCDC plant (pipework and fittings etc) or utilities is caused you may be liable for any resultant loss or damage.

Information given is generally subject to reasonable tolerance and precise accuracy cannot be guaranteed, therefore, positioning of plant and utilities should be verified by you on site before any excavations commence.

Contact Council if in any doubt.

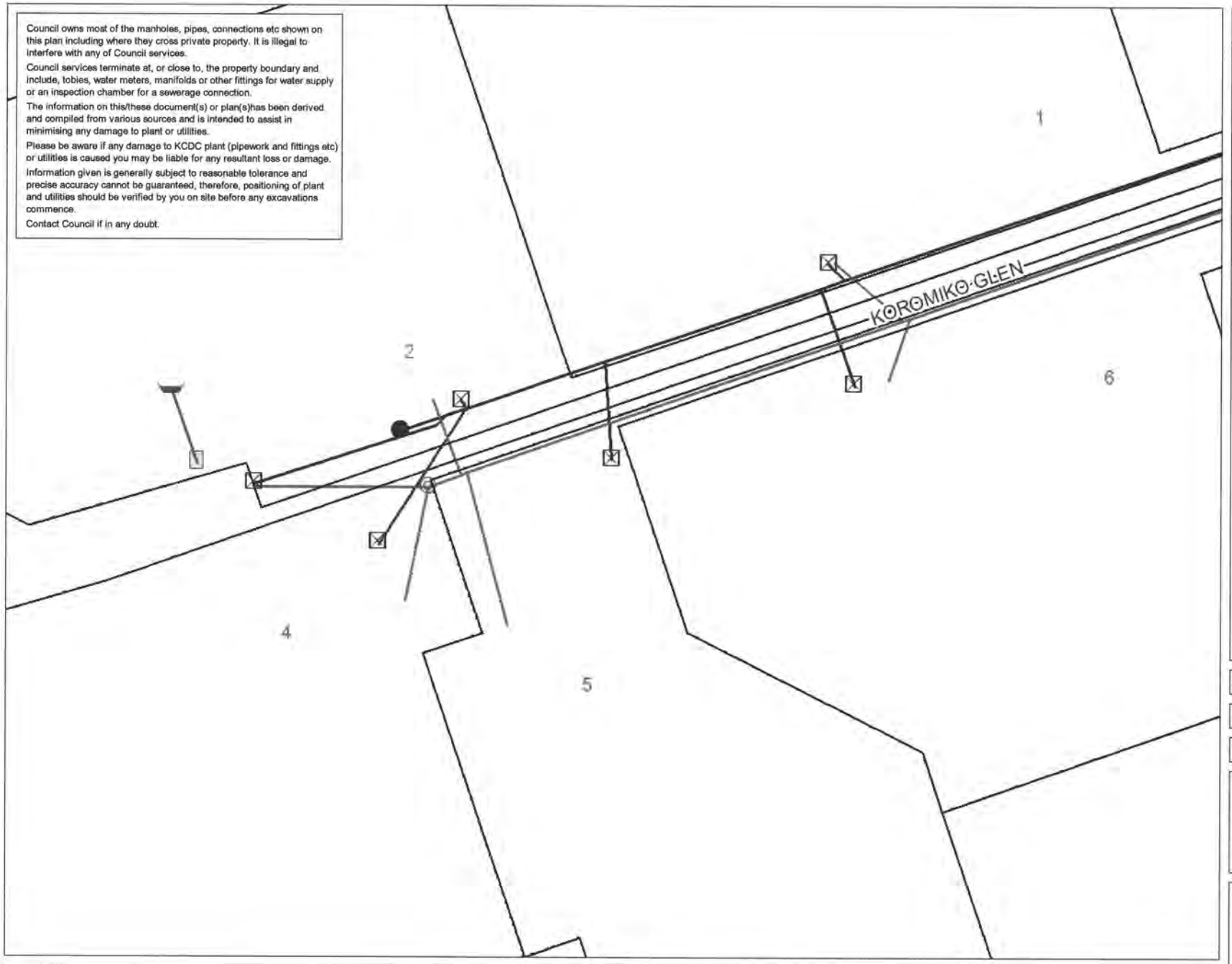

LEGEND

NORTH

- Sewer Pump
- Sewer Manhole
- Stormwater Soak Hole
- Stormwater Pump
- Stormwater Manhole
- Stormwater Sump
- Stormwater Outlet
- Stormwater Inlet
- Water Hydrant
- Water Valve
- Water Toby
- Sewer Rising Main
- Sewer Pipe
- Stormwater Pipe
- Stormwater Rising Main
- Water Pipe

Map Drawn Date: 17/02/2004 By PC96

Scale: A4 1:260

Date of Aerial Photography:

Cadastral information derived from Land Information New Zealand. Crown Copyright reserved. Approved for internal reproduction by Kapiti Coast District Council. Boundary accuracy is variable.

KAPITI COAST DISTRICT COUNCIL

SERVICE NETWORK

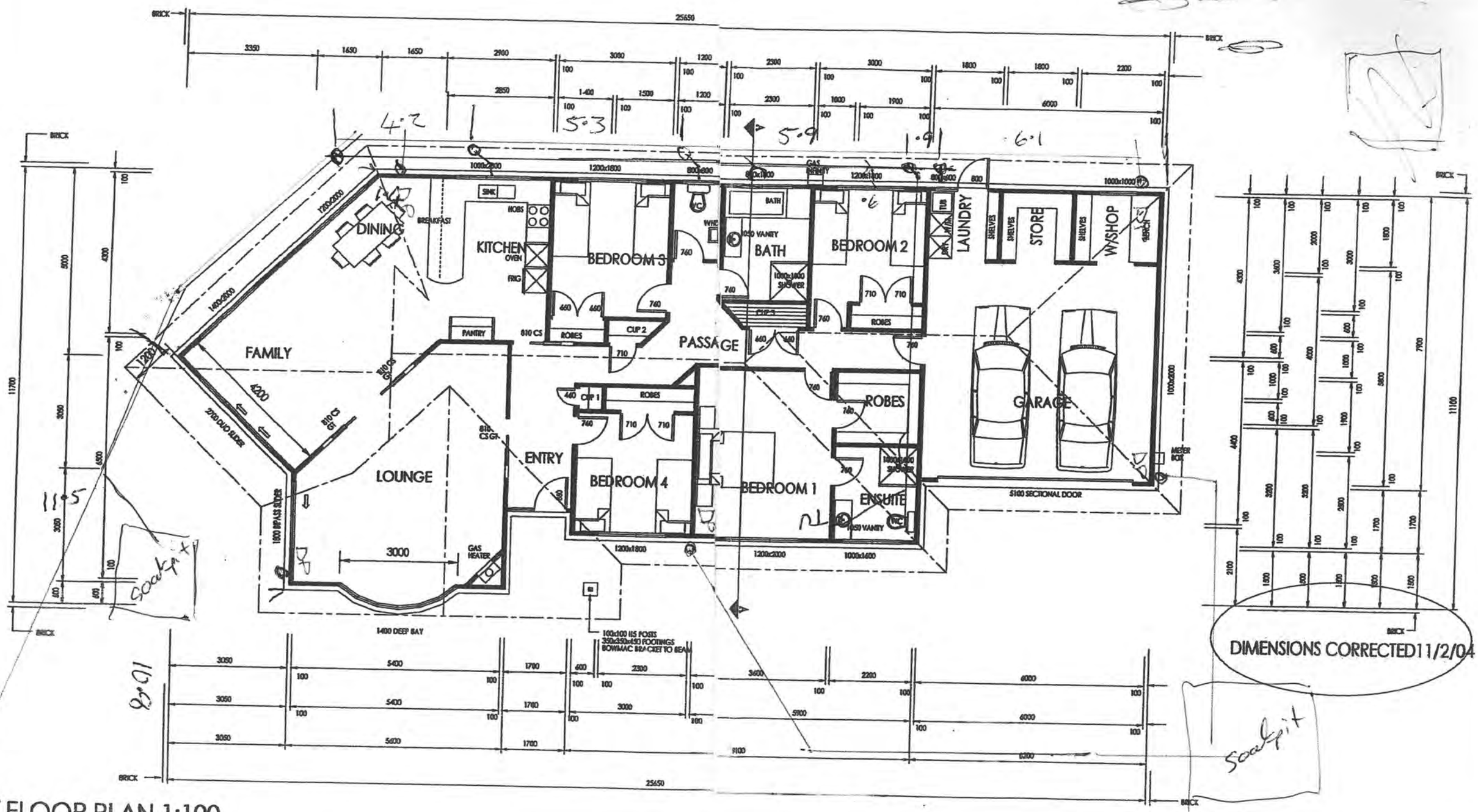

FLOOR PLAN 1:100
AREA 231.5(2492)ft2
PERIMETER 71.2m

3
4 2
1

ELEVATIONS

PROPOSED DWELLING FOR PTT - LOT 5 - KOROMIKO GLEN - WAIKANAE - BY HOMECREATORS

PLANMAKERS DRAUGHTING & DESIGN (1991) LTD
P.O.BOX 1502 PARAPARAUMU BEACH
RAY WILSON nzcd (arch) nmzid
PHONE (04)9026081 FAX (04)9026082
EMAIL planmakers@paradise.net.nz

DRAWING	ISSUE NO
1	11/2/04