EXPLODED DRAWING—Model No. 831.100413
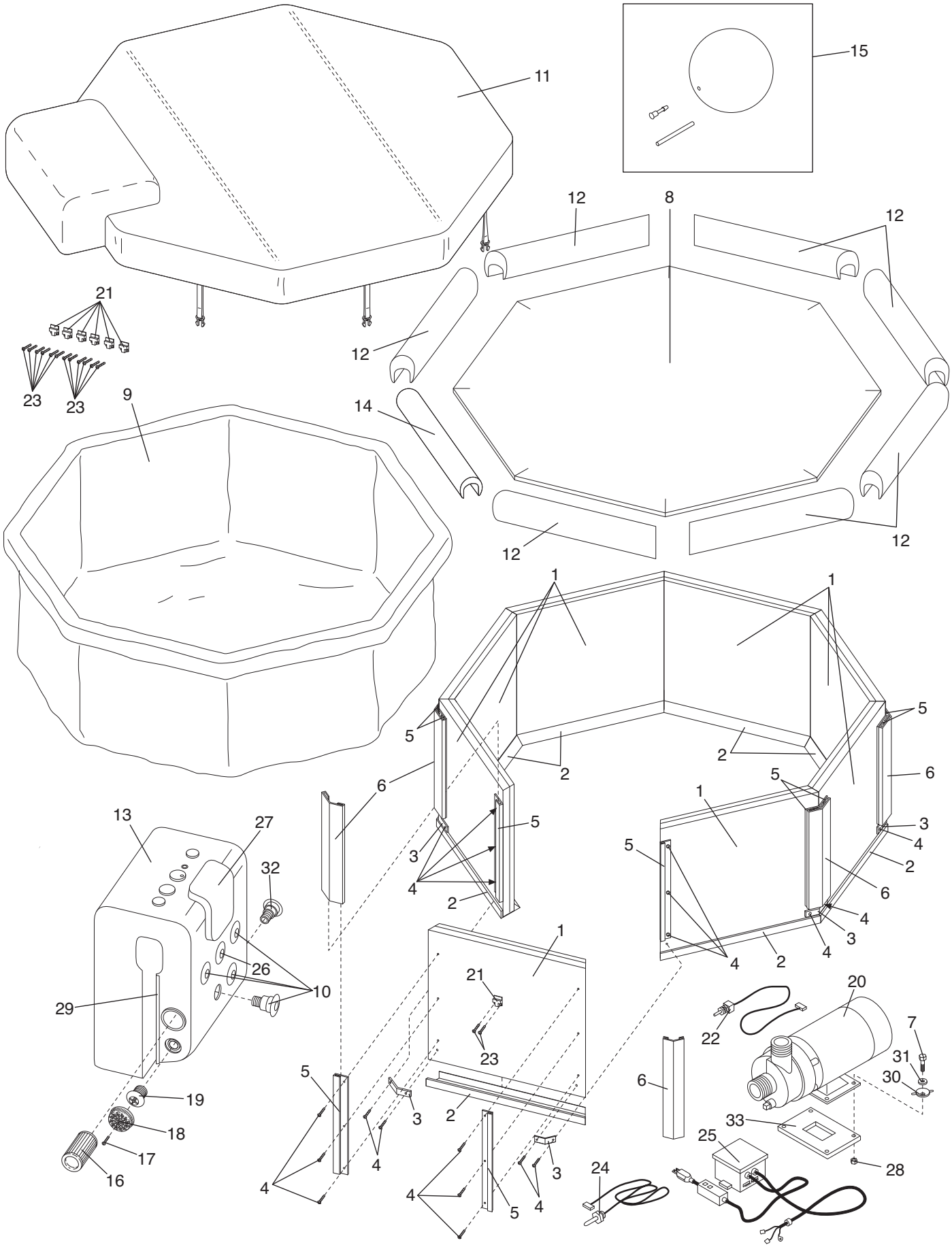
R0398A