EXPLODED DRAWING—Model No. 150722
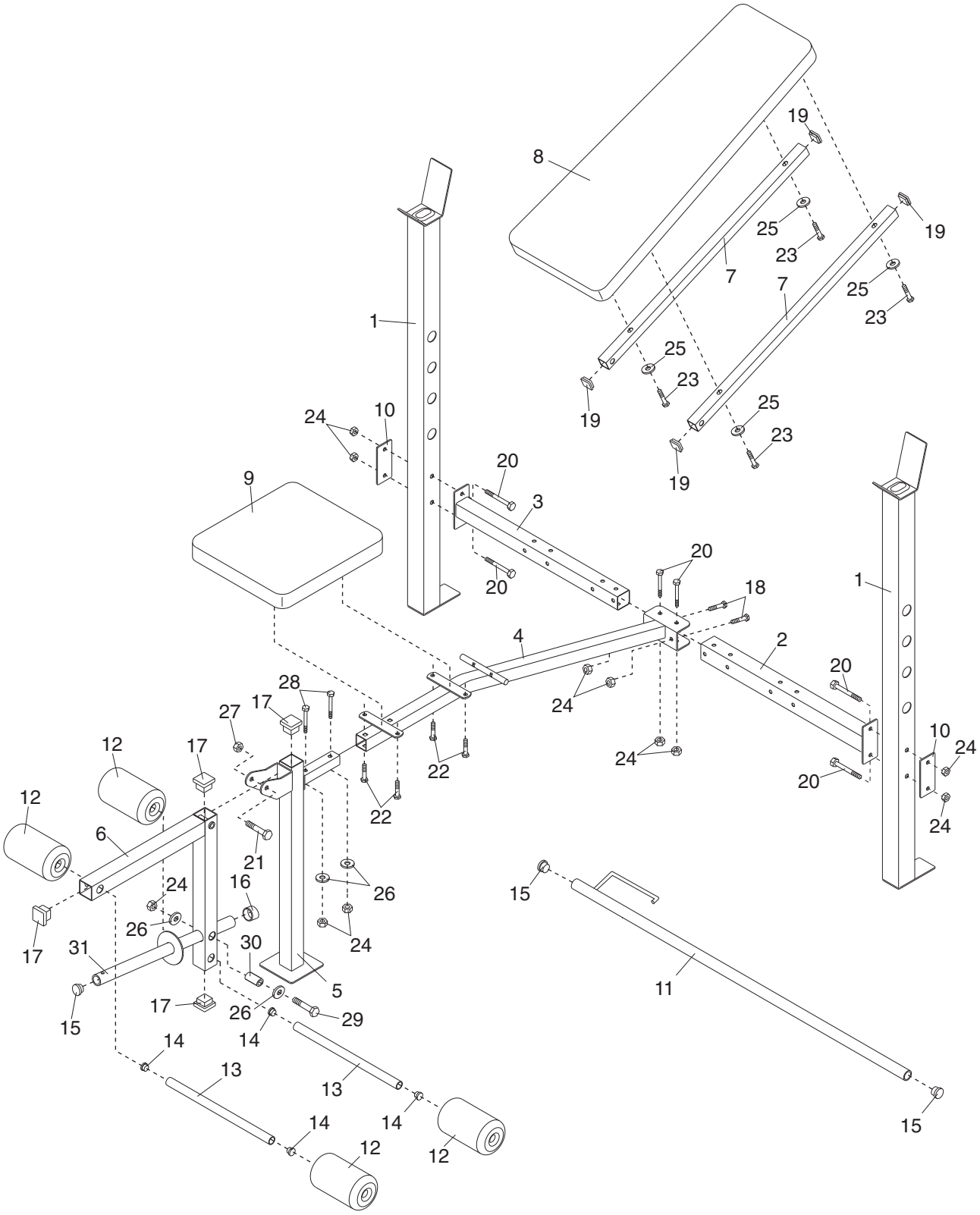
R1004A