PART LIST/EXPLODED DRAWING

Model No. 831.15906.0 R1011A

Key No.	Qty.	Description
1	1	Frame
2	1	Front Leg
3	1	Rear Leg
4	1	Rear Stabilizer
5	1	Backrest Frame
6	1	Pivot Bracket
7	1	Backrest
8	1	Seat
9	4	Foam Pad
10	2	Pad Tube
11	4	Pad Cap
12	4	50mm Round Outer Cap
13	4	50mm Square Inner Cap
14	1	45mm Square Inner Cap
15	1	25mm x 50mm Inner Cap
16	2	M10 x 63mm Bolt
17	4	M6 x 60mm Screw
18	4	M10 x 63mm Carriage Bolt
19	10	M10 Locknut
20	2	M10 Washer
21	1	Locking Pin
22	4	M6 Washer
23	1	M10 x 85mm Bolt
24	4	M6 x 16mm Screw
25	3	M10 x 20mm Bolt
26	2	M10 x 70mm Bolt
27	2	M10 Large Washer
28	1	M4 x 16mm Screw
29	1	Front Stabilizer
*	–	User's Manual
*	–	Exercise Guide
*	–	Grease Packet
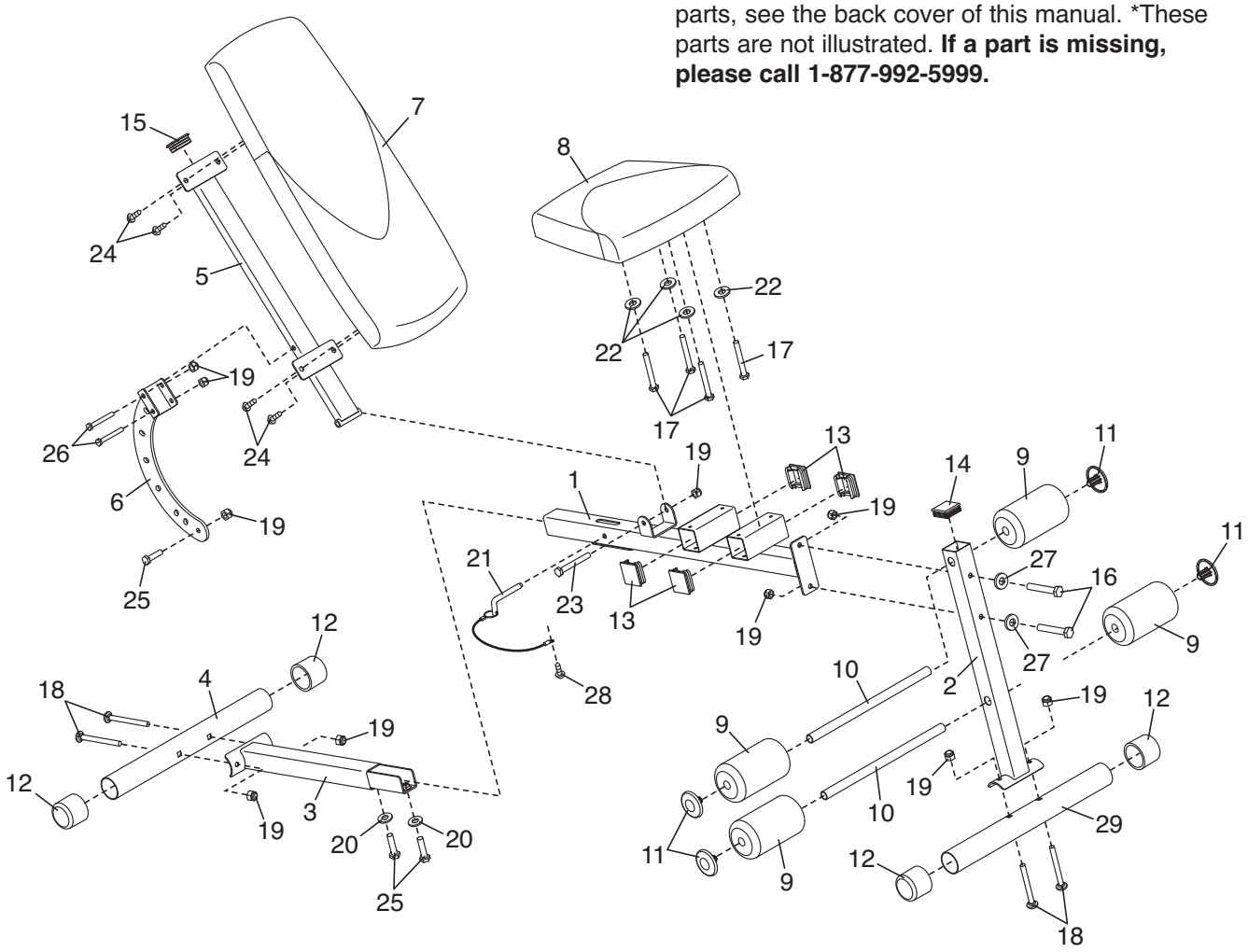
Note: Specifications are subject to change without notice. For information about ordering replacement parts, see the back cover of this manual. *These parts are not illustrated. **If a part is missing, please call 1-877-992-5999.**