EXPLODED DRAWING—Model No. 831.210050
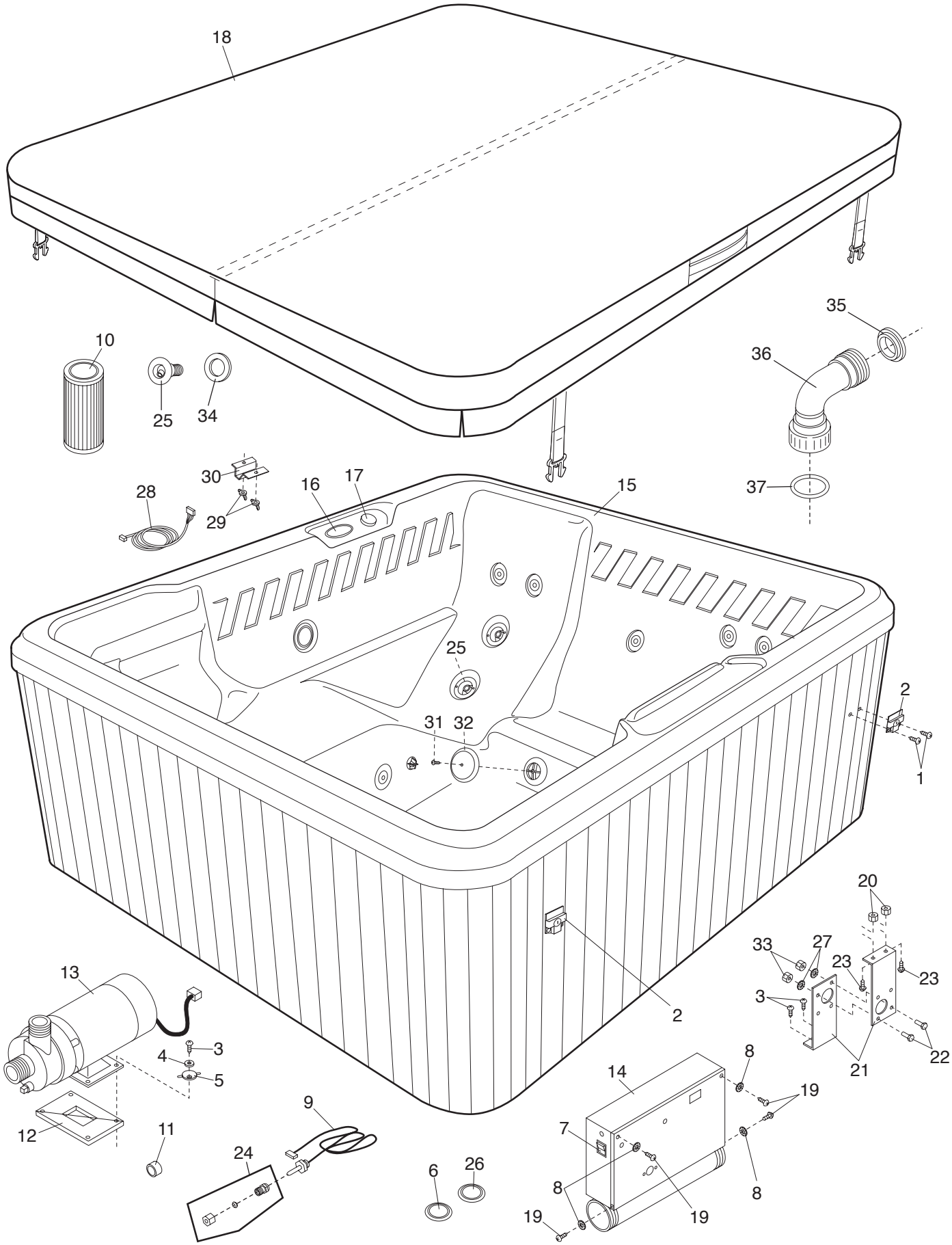
R0498A