EXPLODED DRAWING—Model No. 831.215000
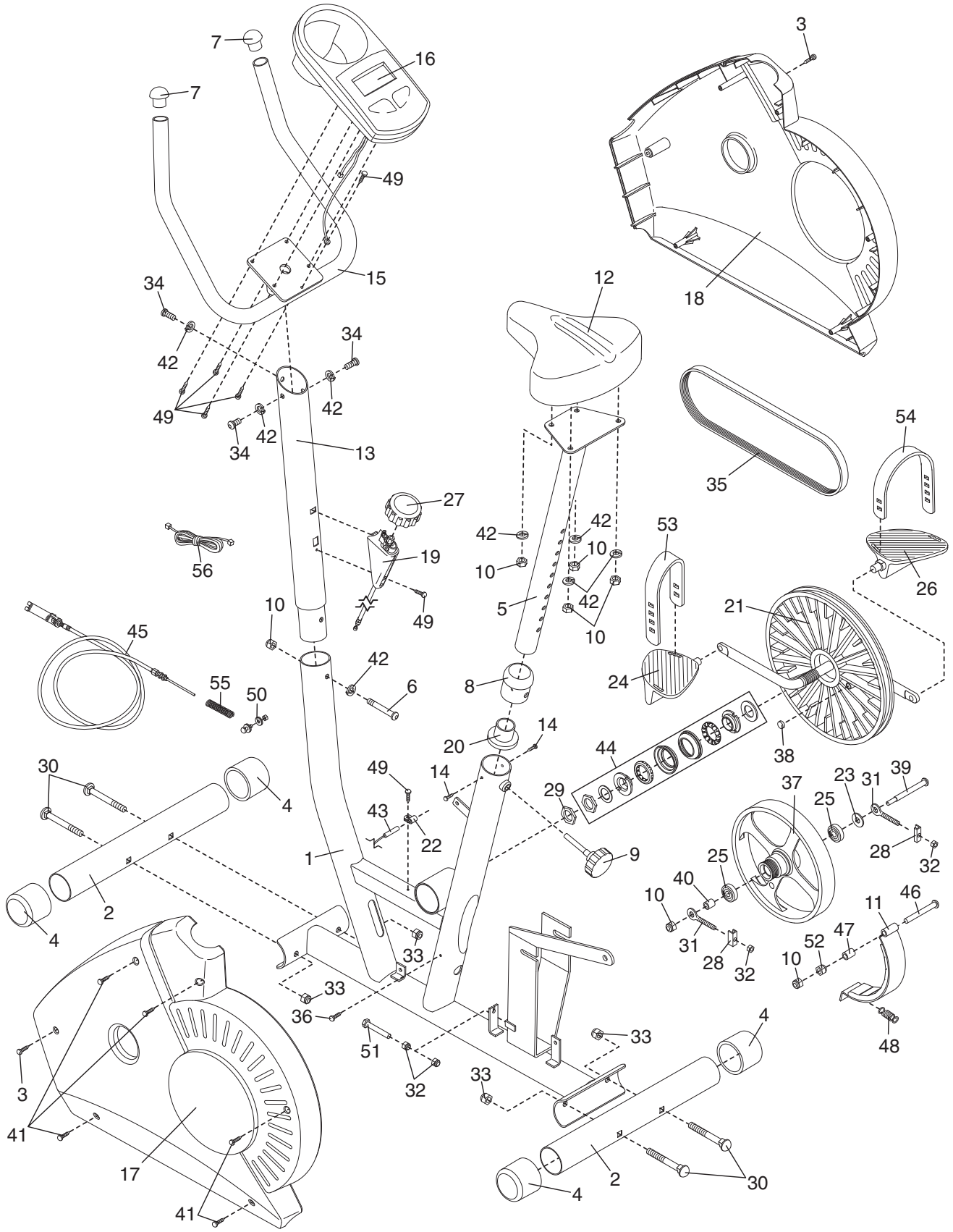
R0205B