EXPLODED DRAWING—Model No. 831.21641.2
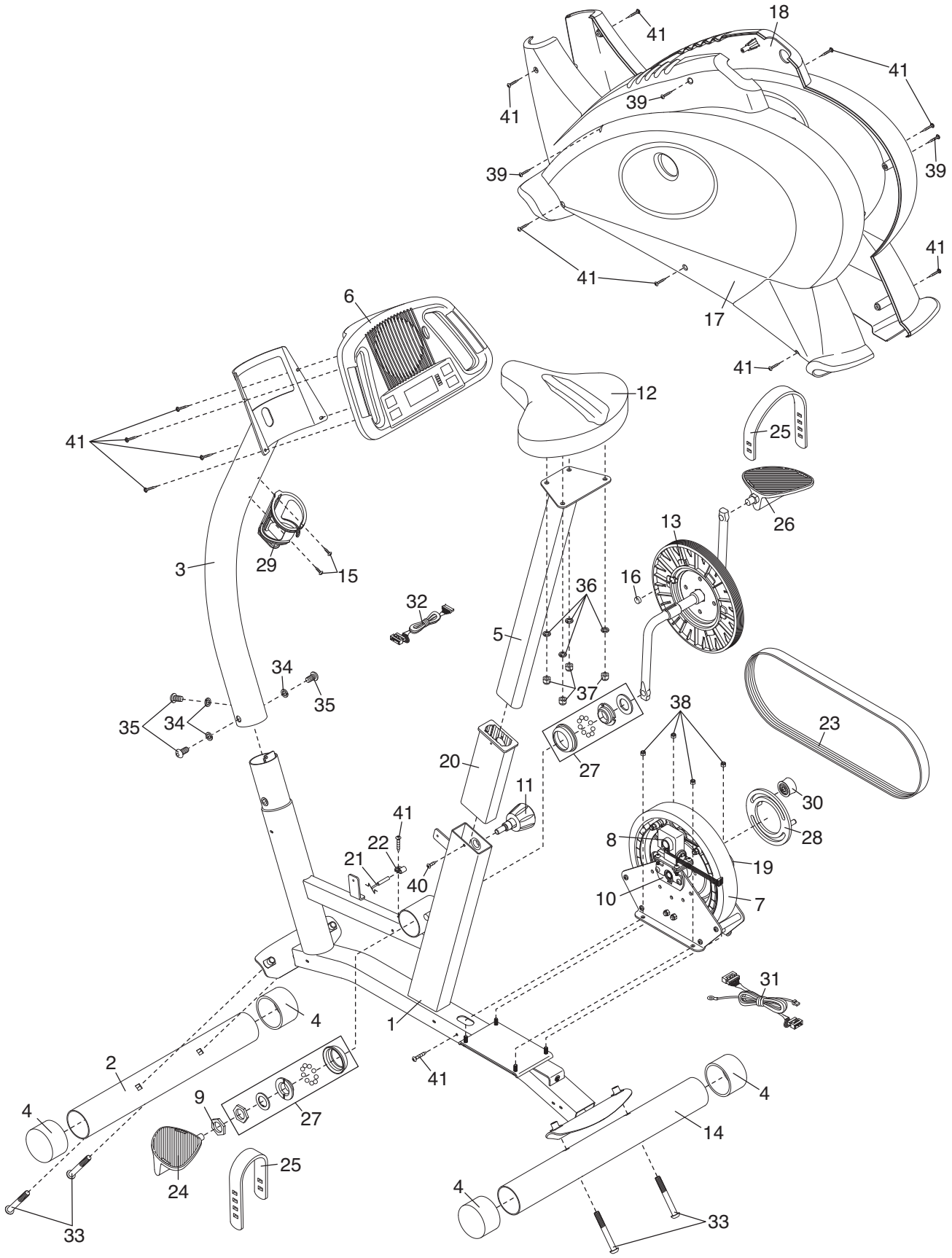
R0408A