EXPLODED DRAWING
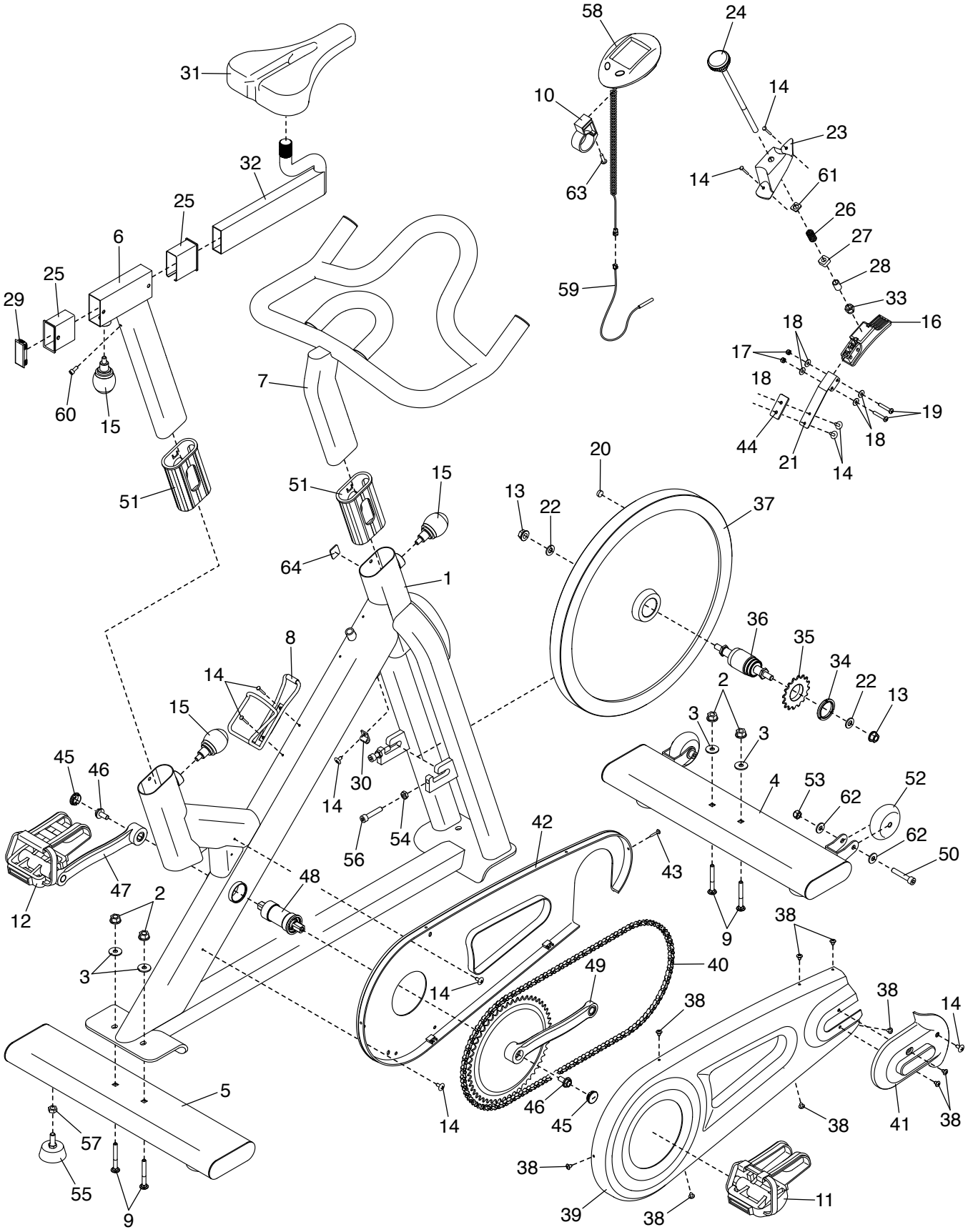
Model No. 21905.1 R0118A