EXPLODED DRAWING
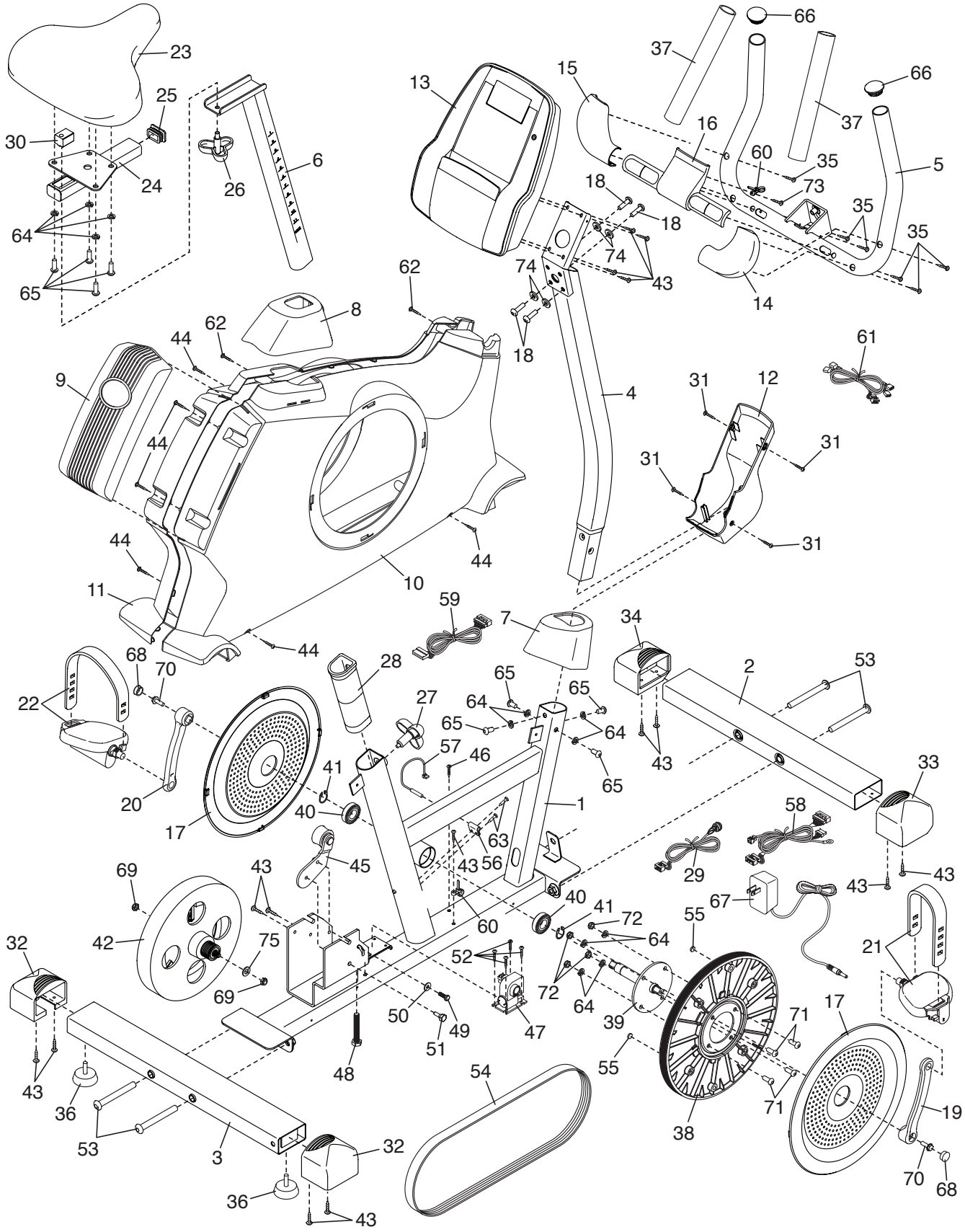
Model No. NTEX23012.0 R0812A