EXPLODED DRAWING
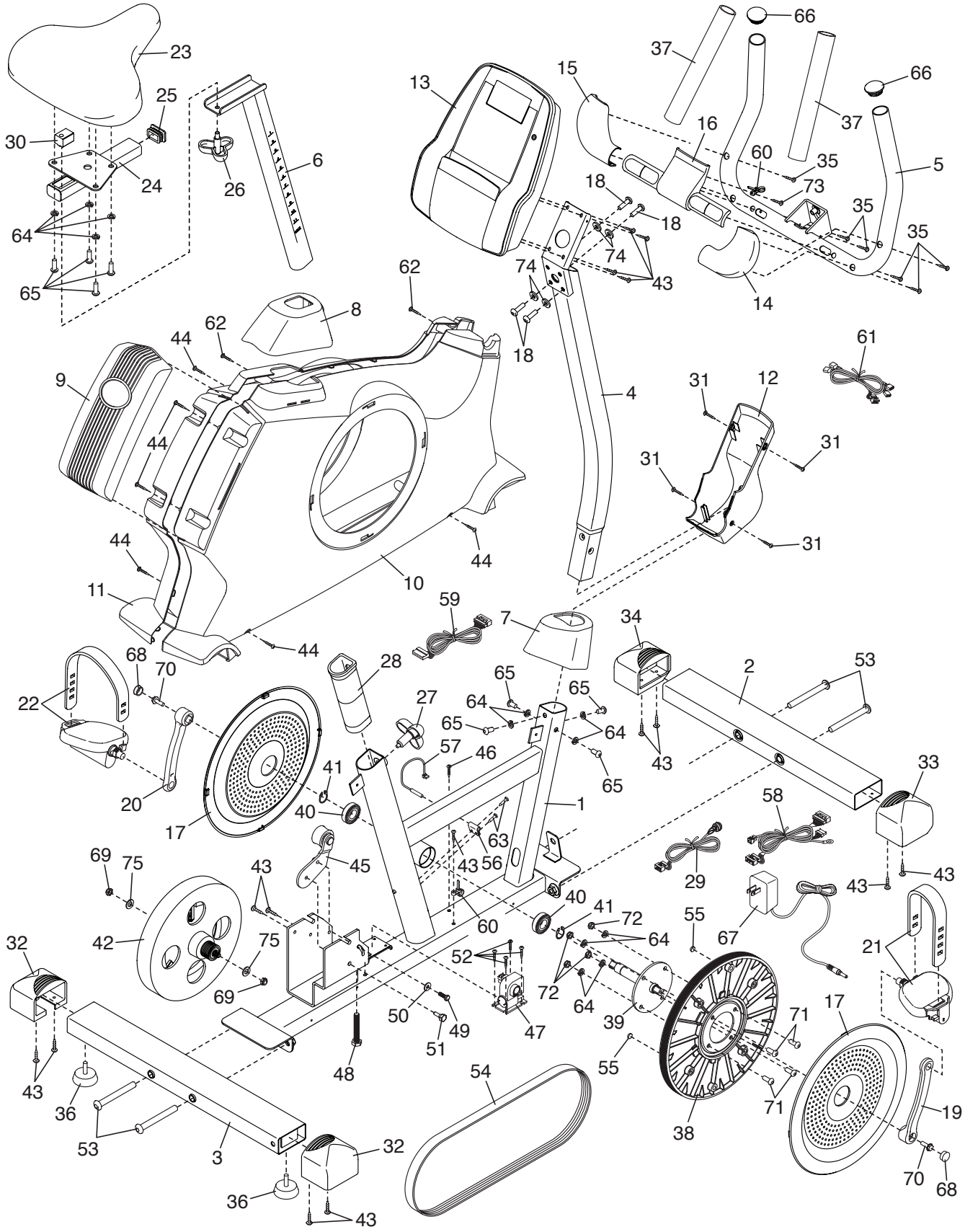
Model No. NTEX23012.1 R0713A