EXPLODED DRAWING A

Model No. 23943.5 R0915A

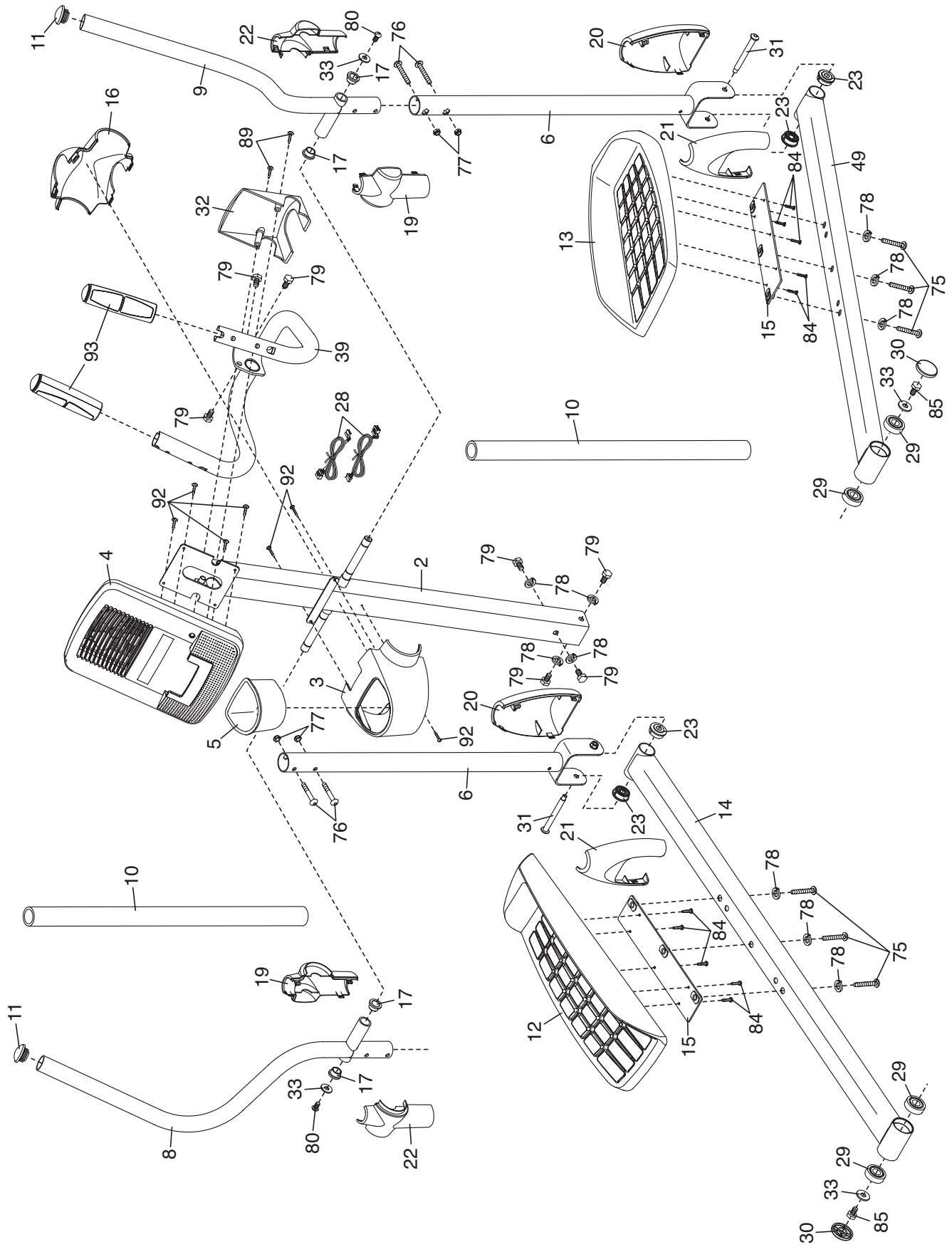

EXPLODED DRAWING B
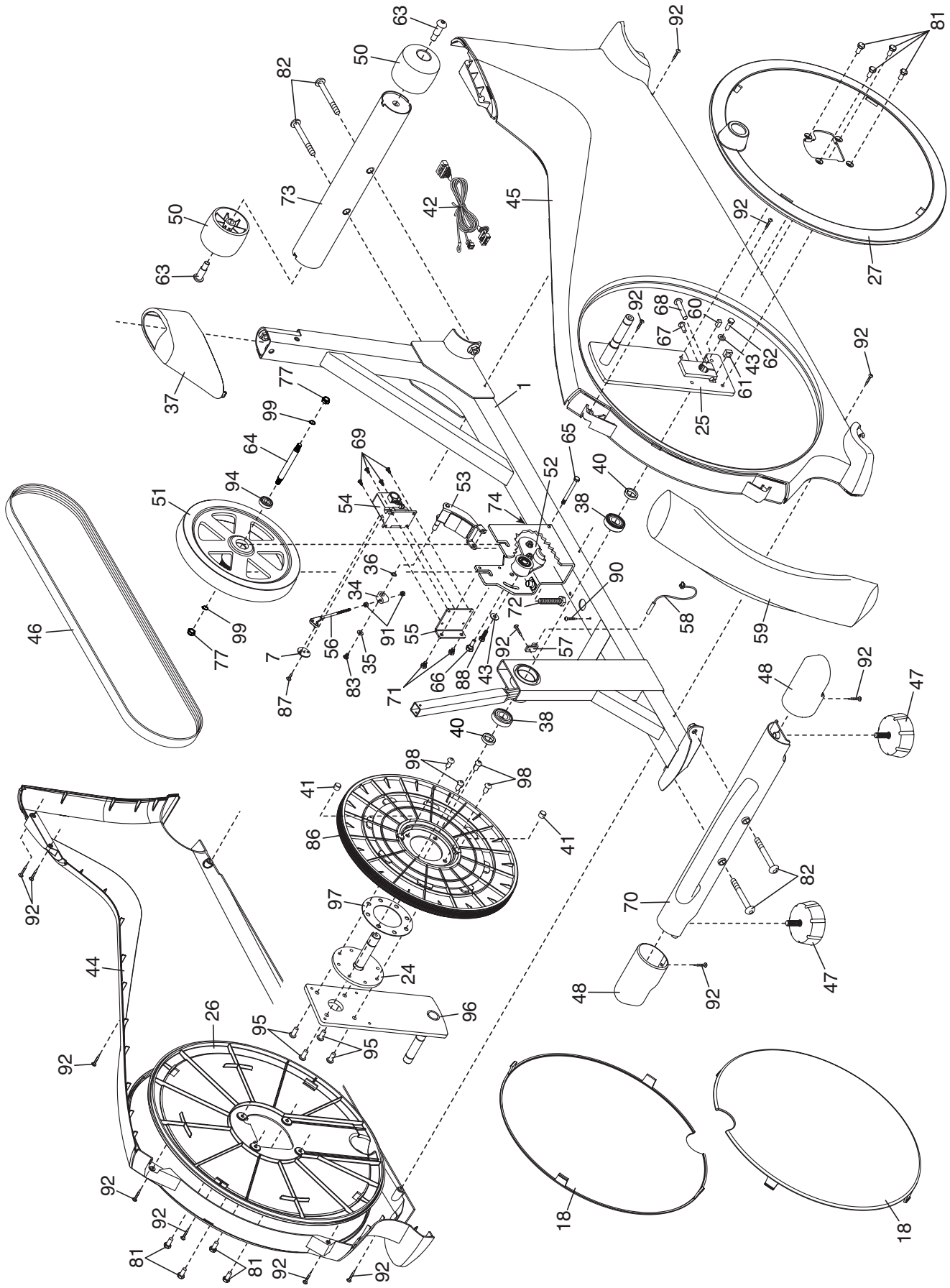
Model No. 23943.5 R0915A