EXPLODED DRAWING A

Model No. 24032C.0 R0616A

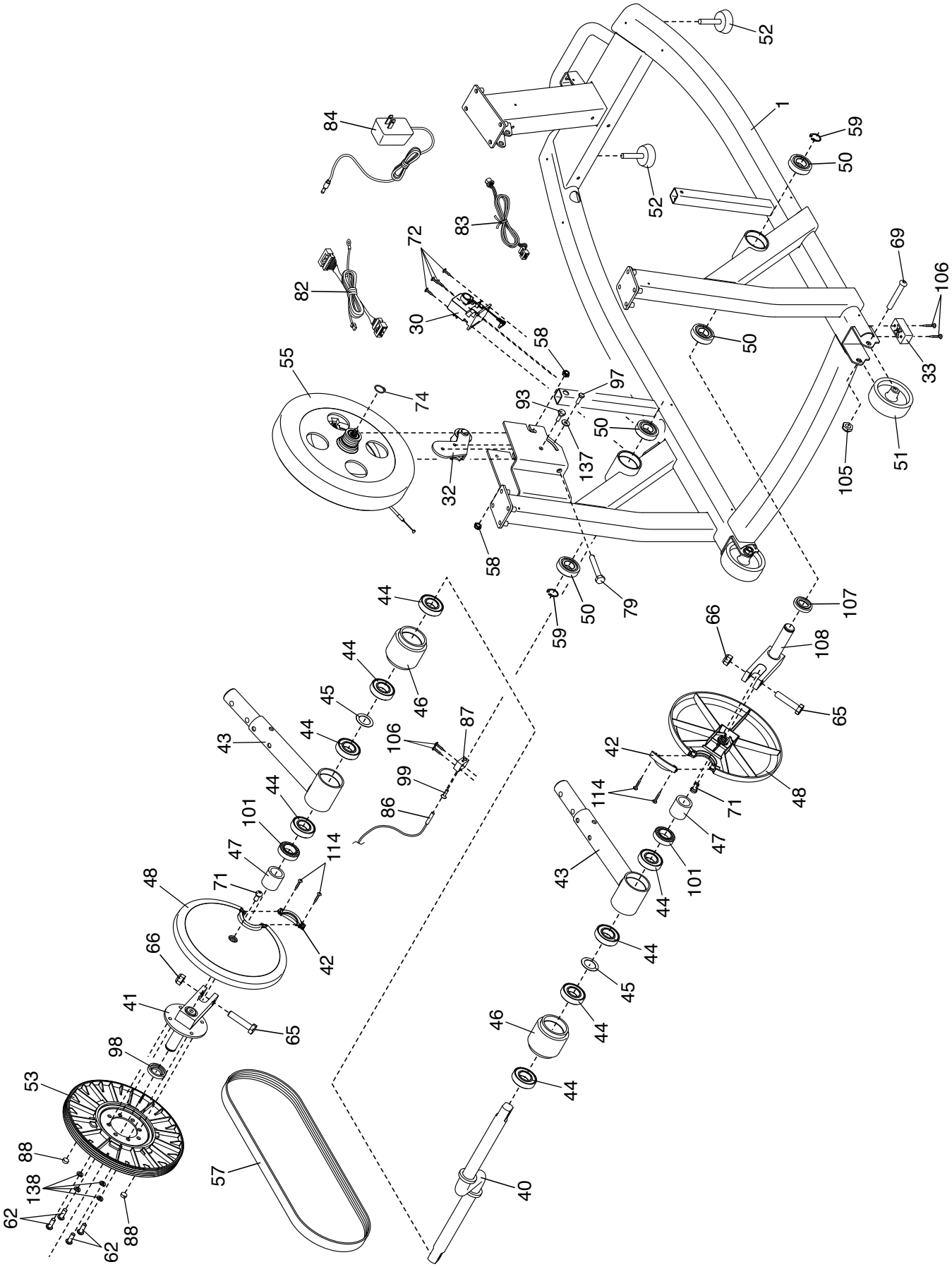

EXPLODED DRAWING B

Model No. 24032C.0 R0616A

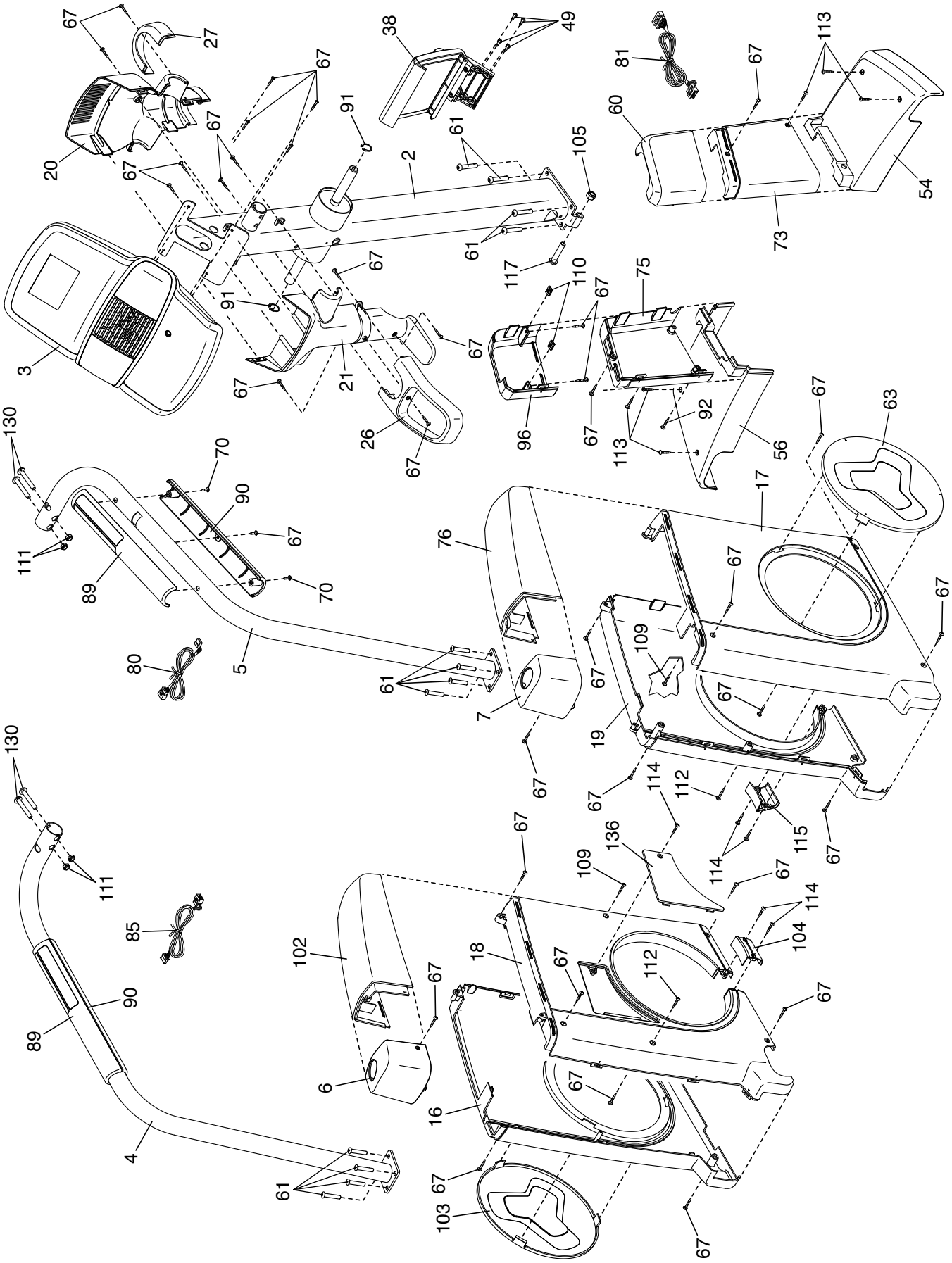

EXPLODED DRAWING C
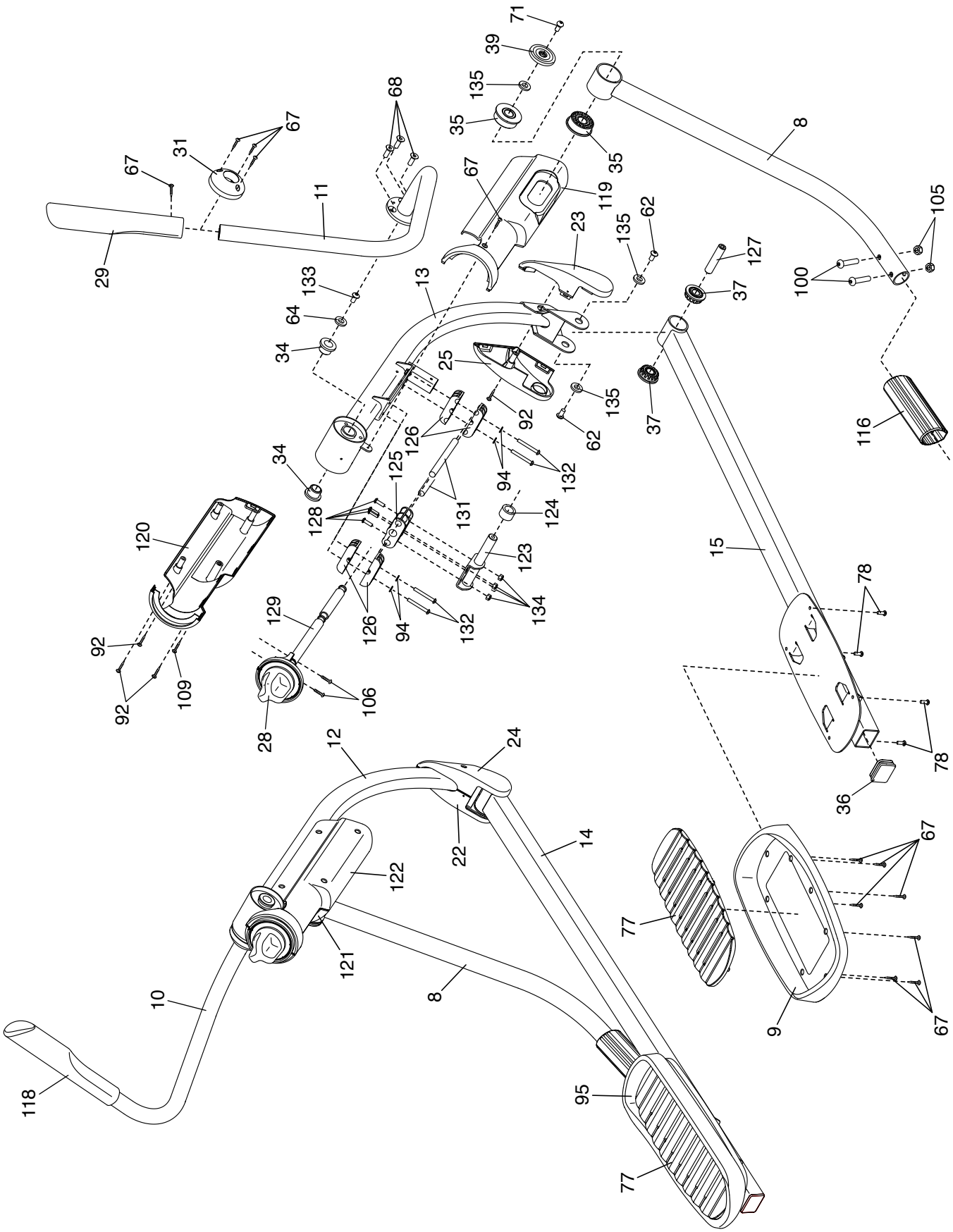
Model No. 24032C.0 R0616A