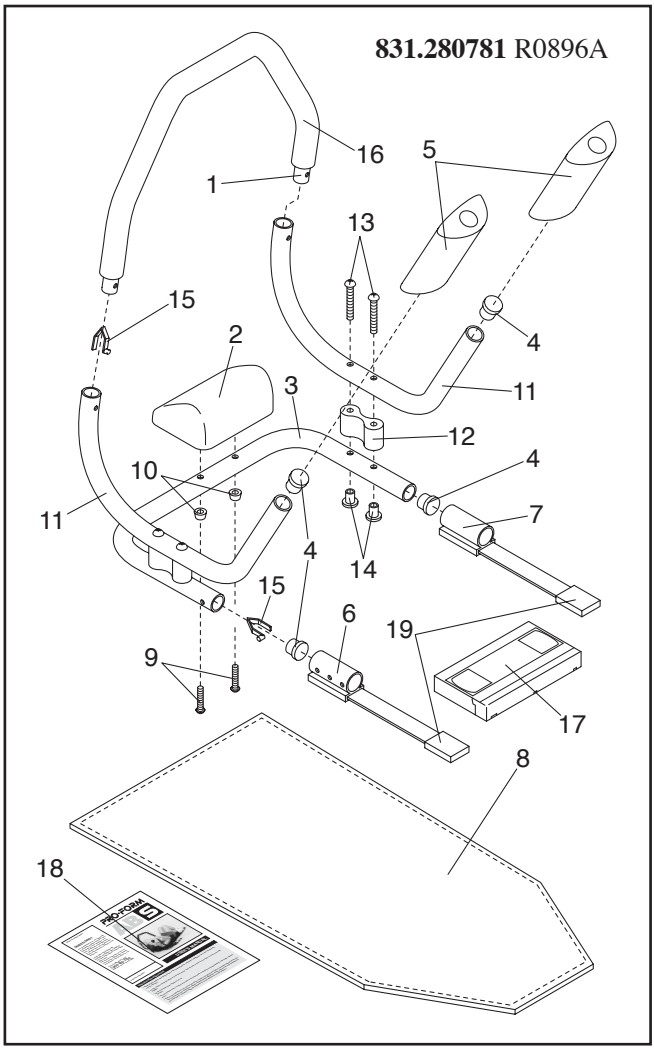Exploded Drawing