EXPLODED DRAWING—Model No. 831.285370
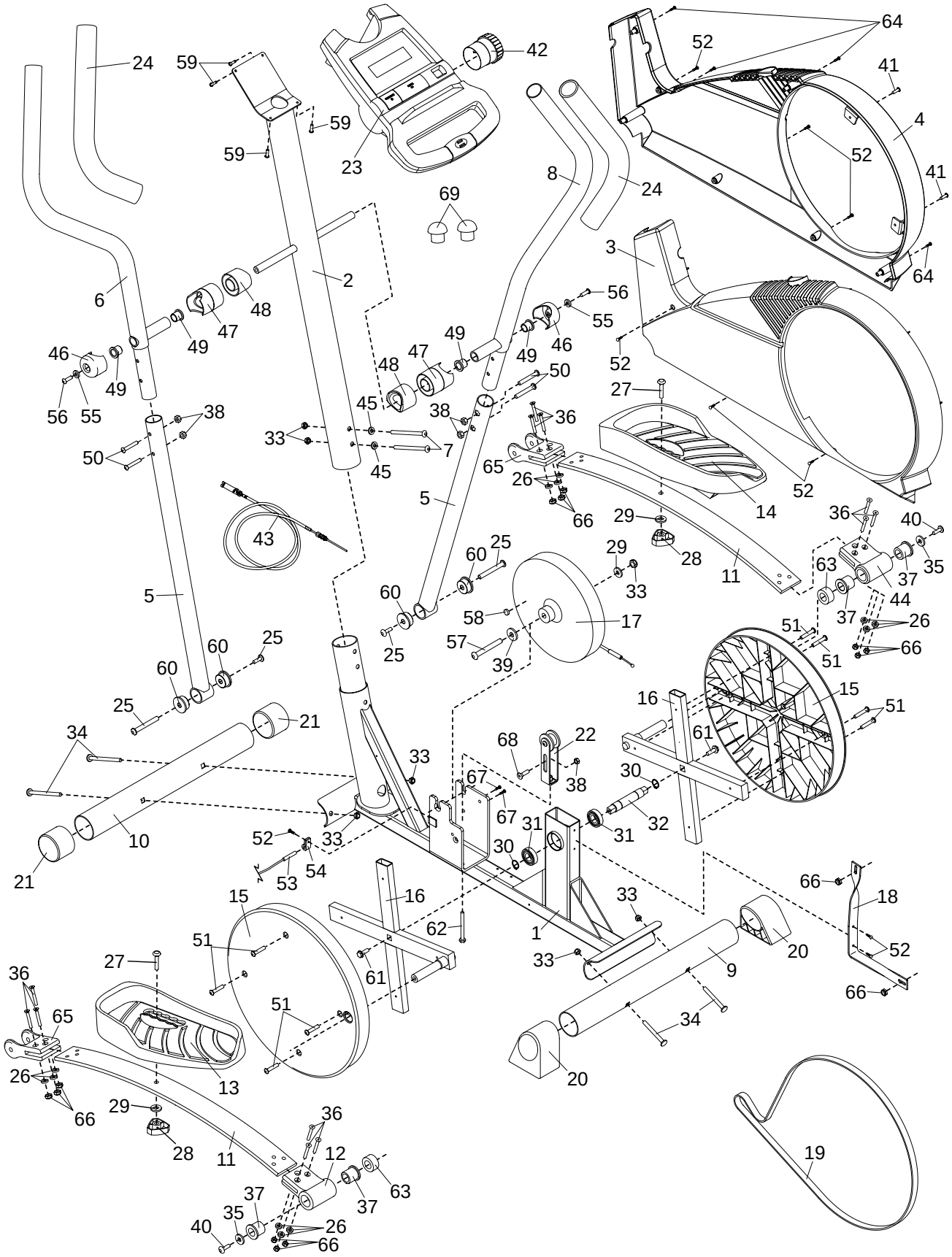
R1002A