EXPLODED DRAWING - Model No. 831.287910

Rev. 9/91

Specifications are subject to change without notice.

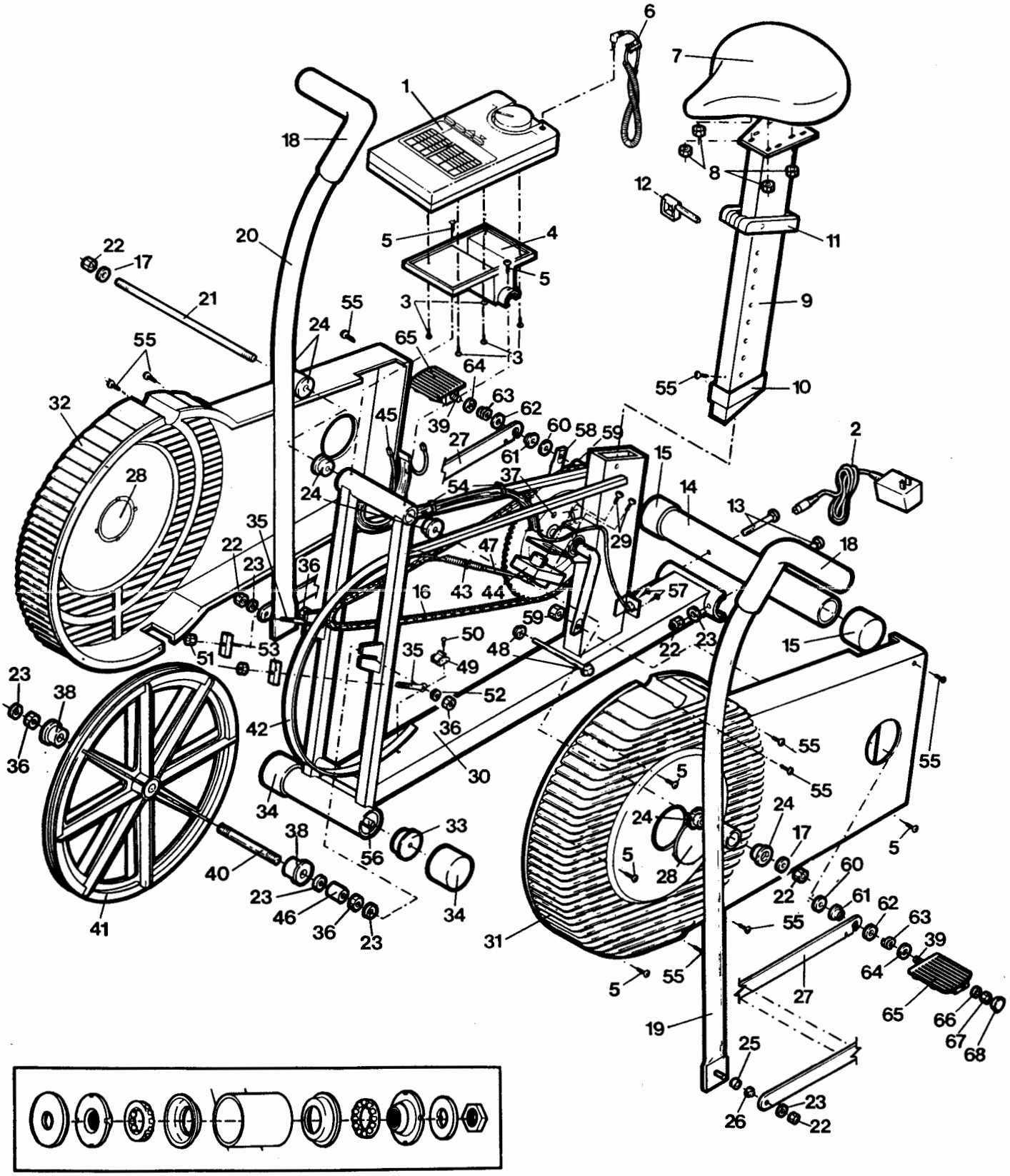

CRANK ASSEMBLY (58)