EXPLODED DRAWING—Model No. 831.293250
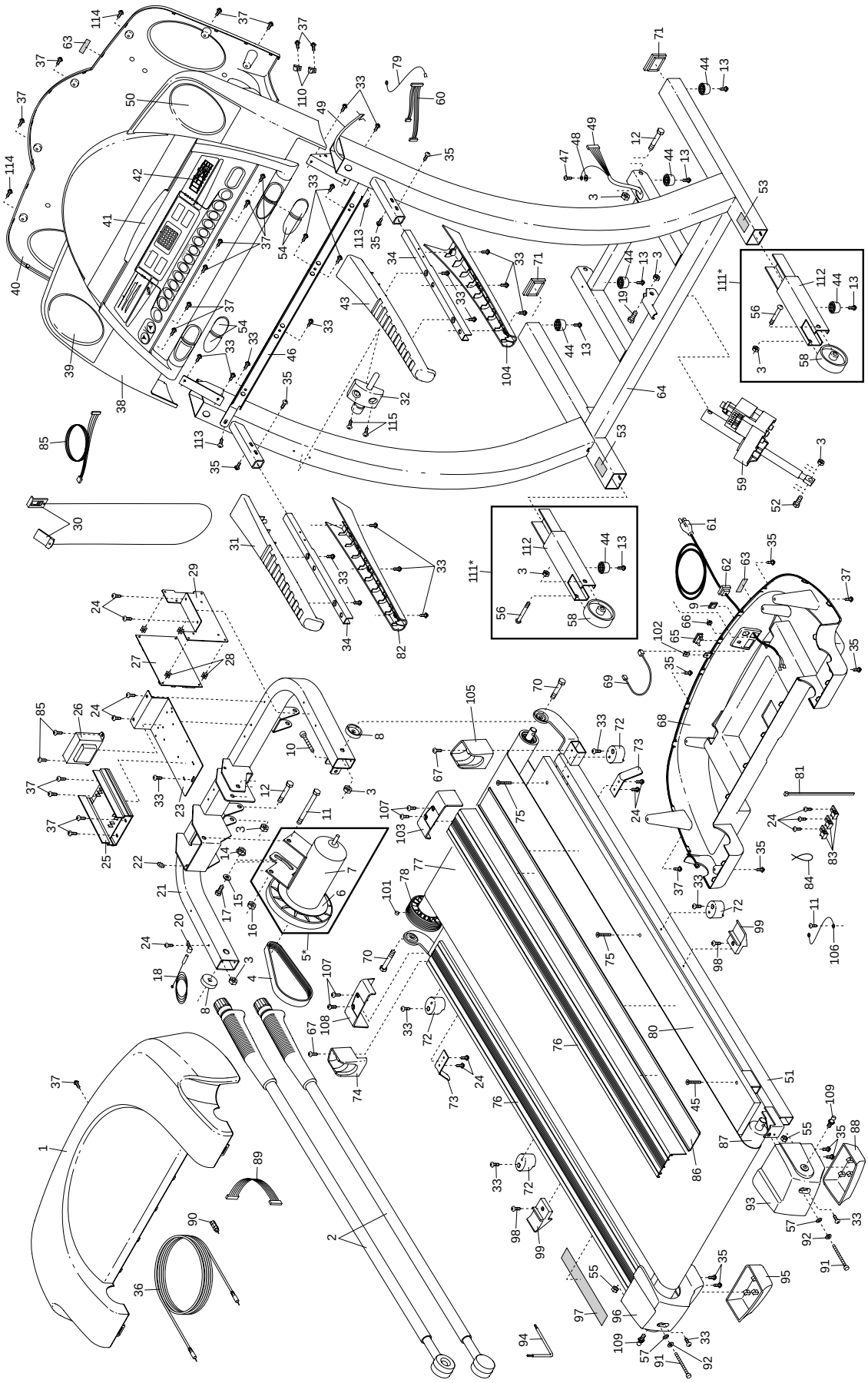
R1002A