EXPLODED DRAWING—Model No. 831.294050

R1003C

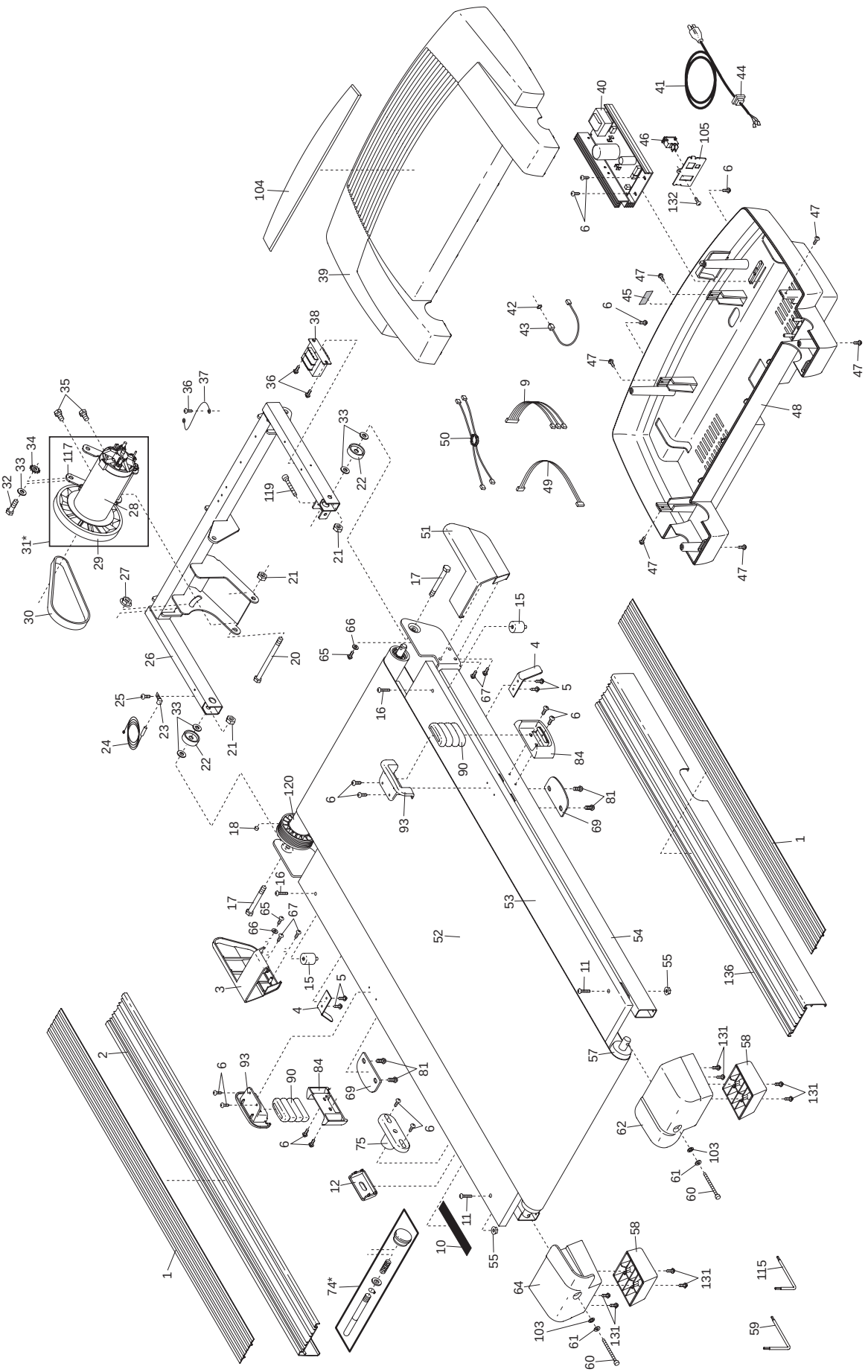

EXPLODED DRAWING—Model No. 831.294050
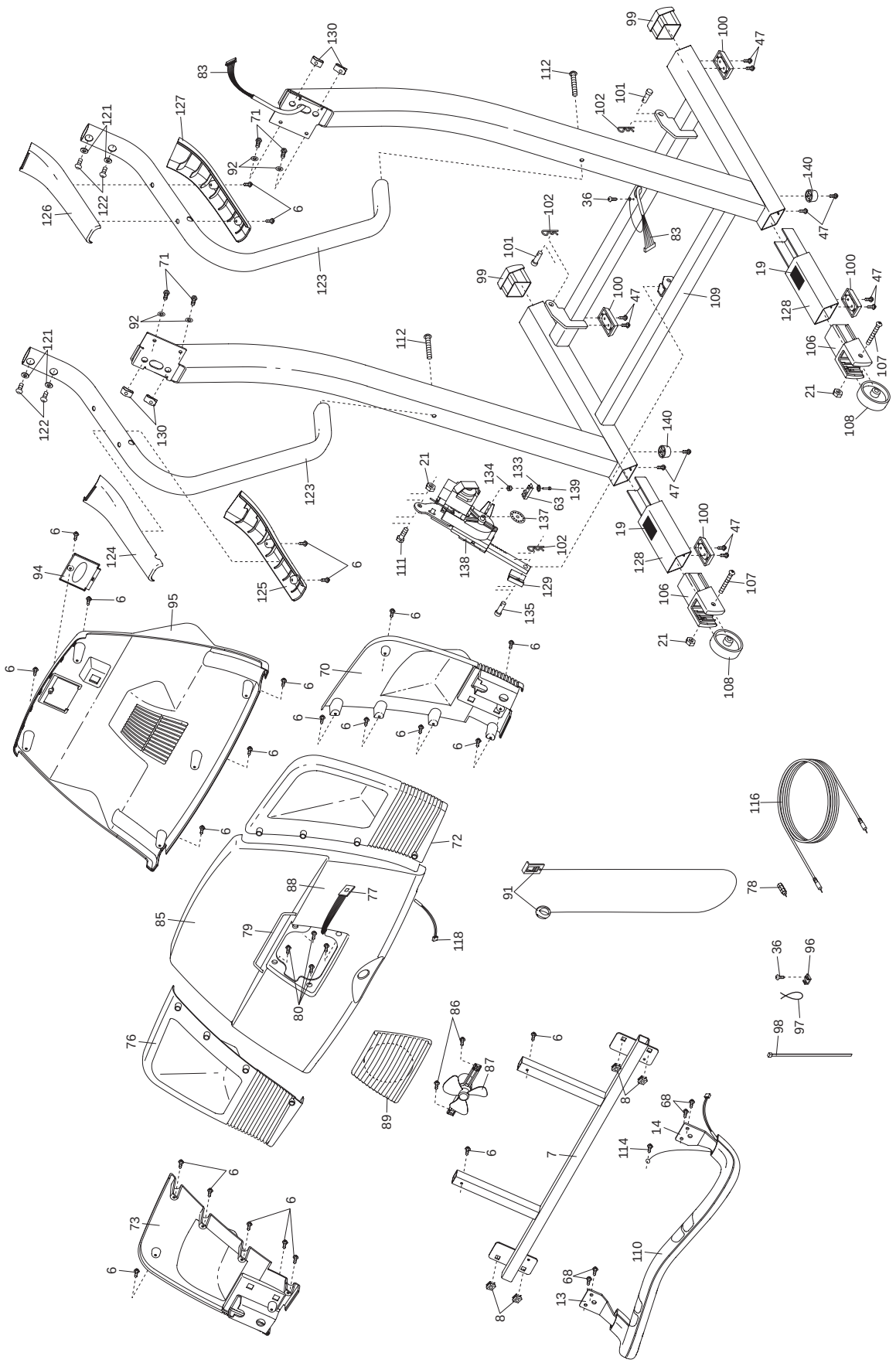
R1003C