EXPLODED DRAWING—Model No. NTL17940

R1203A

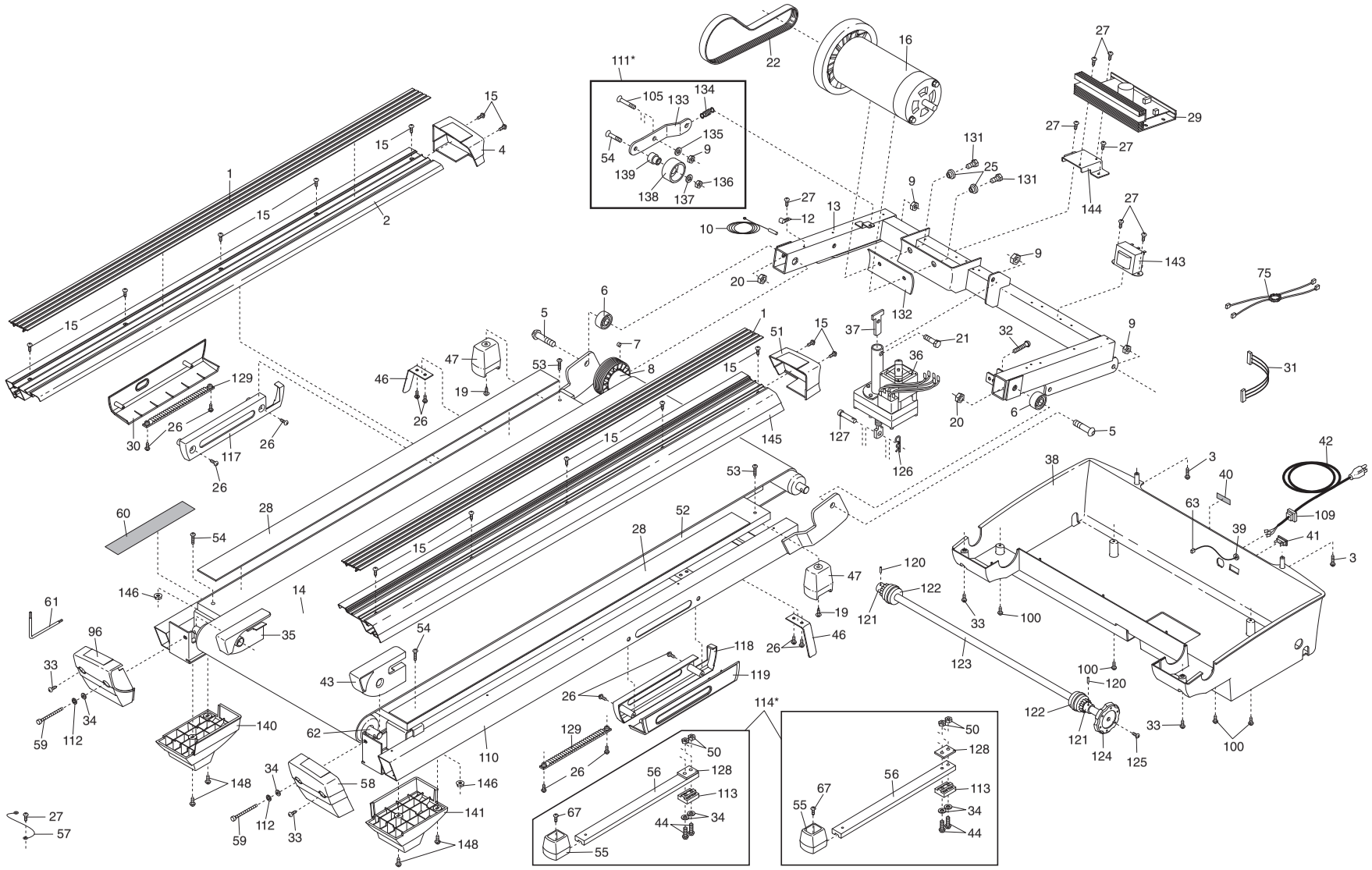

EXPLODED DRAWING—Model No. NTL17940
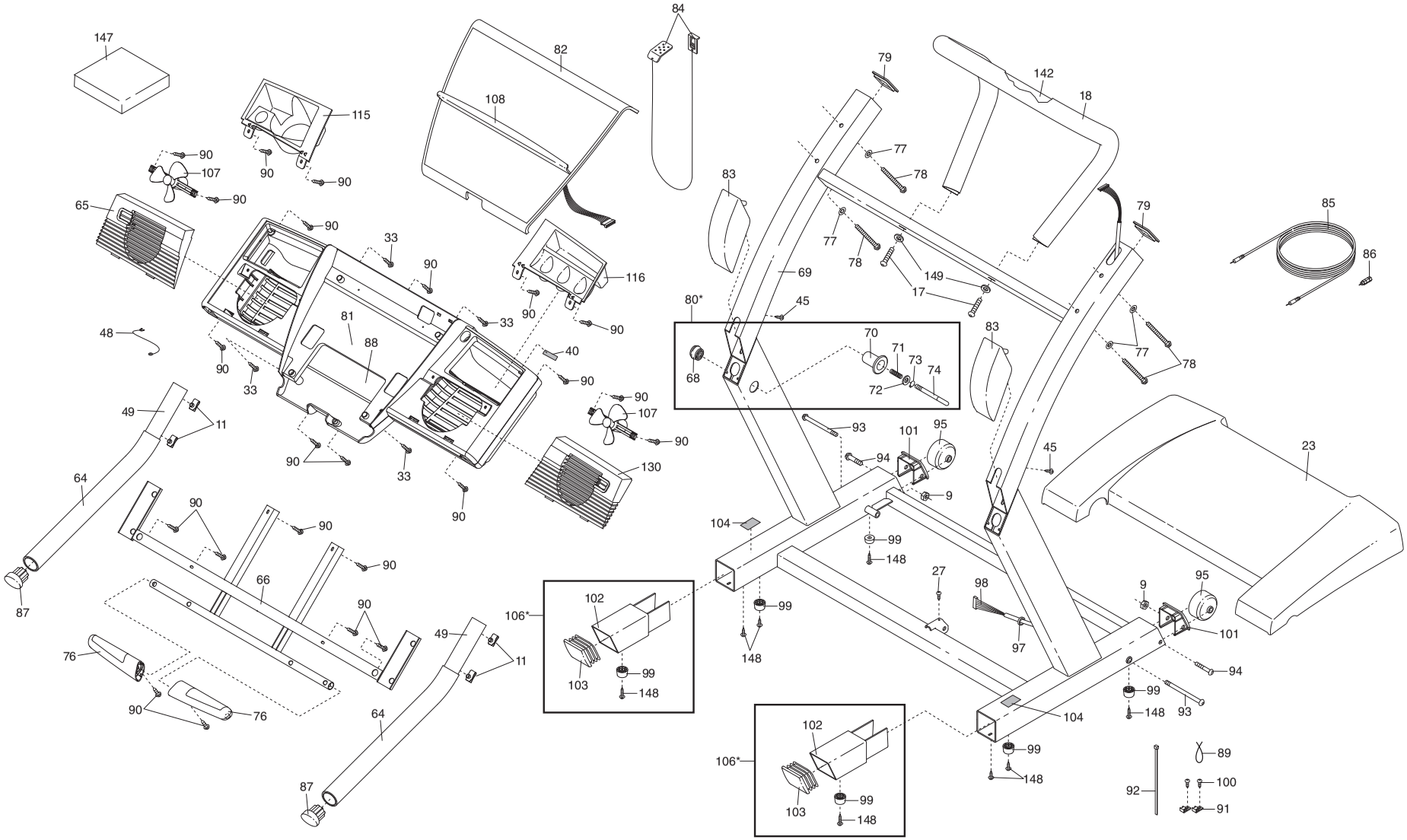
R1203A