EXPLODED DRAWING—Model No. NTL24950

R1204E

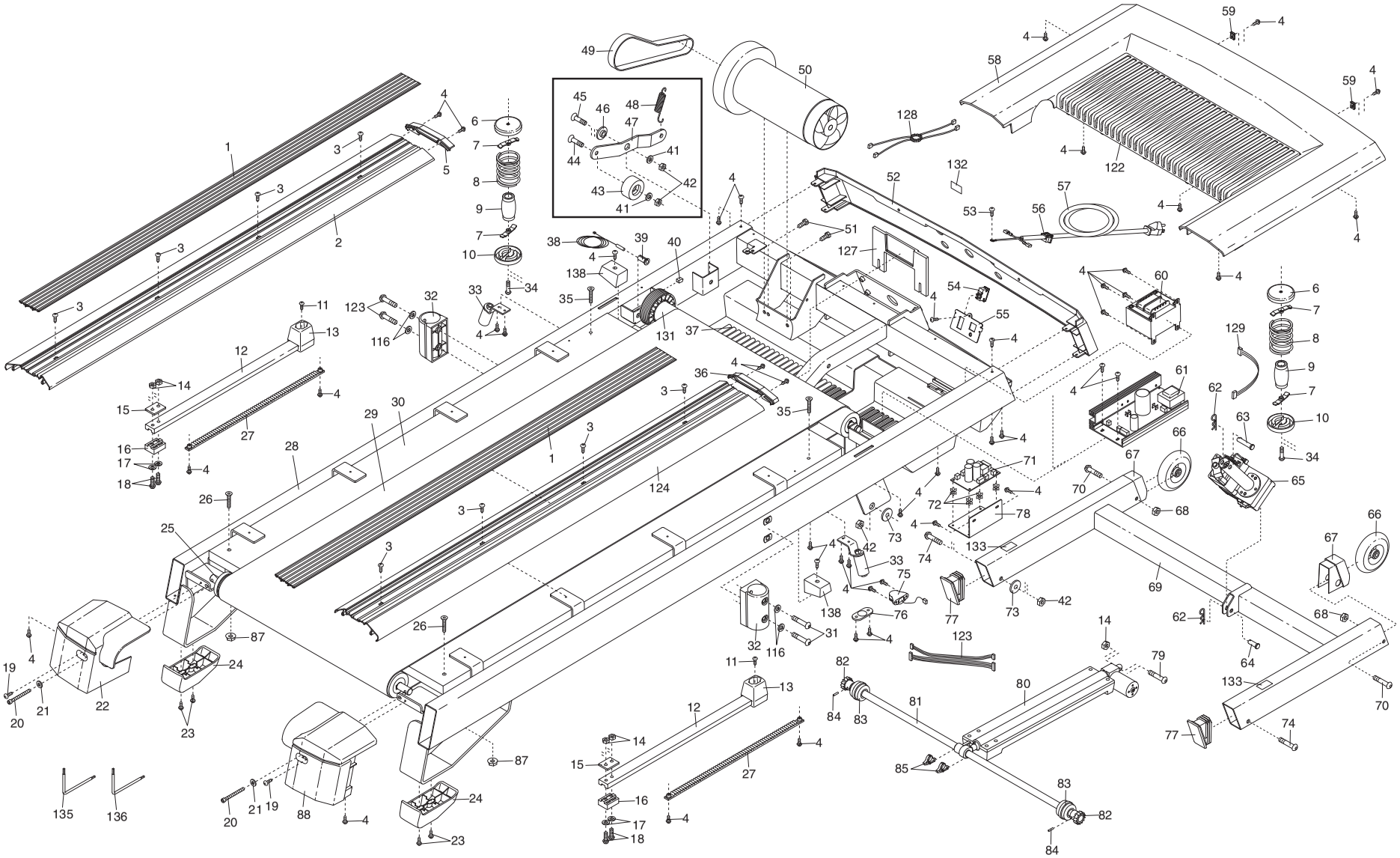

EXPLODED DRAWING—Model No. NTL24950
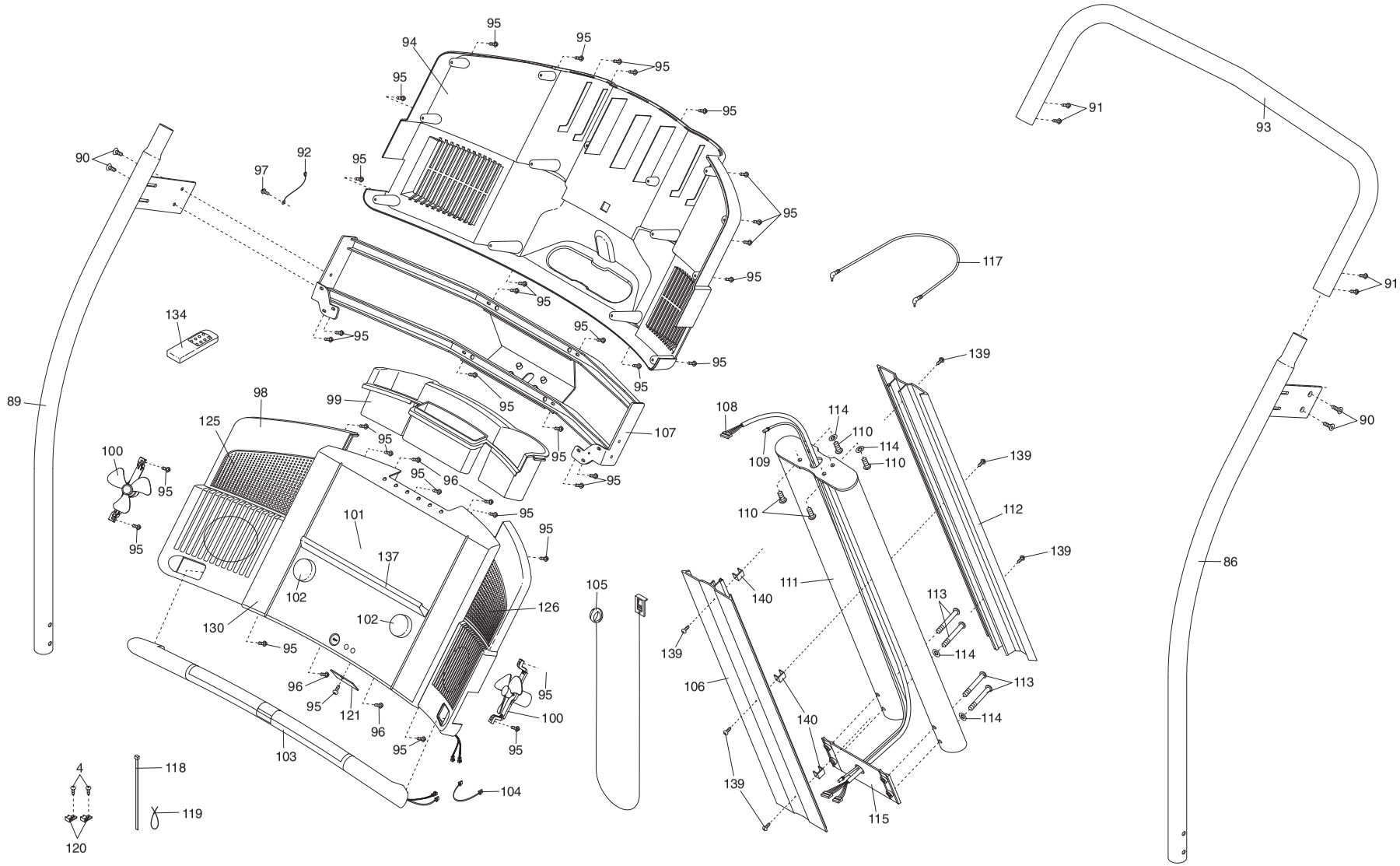
R1204E