EXPLODED DRAWING—Model No. 831.295231
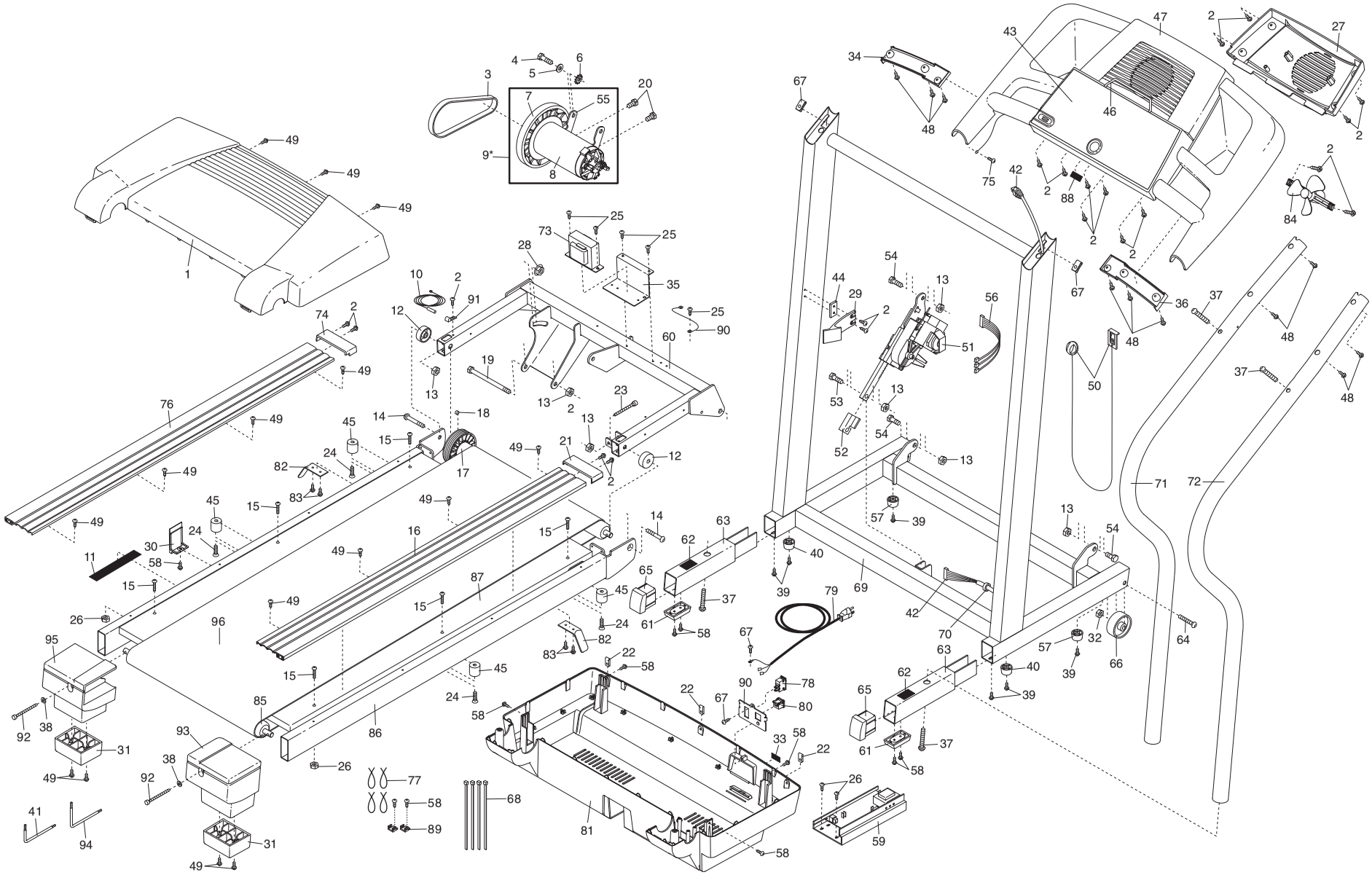
R1104A